Proceedings of the 28th IEEE
EMBS Annual International Conference
New York City, USA, Aug 30-Sept 3, 2006

A Wearable Reflectance Pulse Oximeter for Remote Physiological Monitoring

Y. Mendelson*, *Member, IEEE,* R. J. Duckworth, *Member, IEEE,* and G. Comtois, *Student Member, IEEE*

Abstract—**To save life, casualty care requires that trauma injuries are accurately and expeditiously assessed in the field. This paper describes the initial bench testing of a wireless wearable pulse oximeter developed based on a small forehead mounted sensor. The battery operated device employs a lightweight optical reflectance sensor and incorporates an annular photodetector to reduce power consumption. The system also has short range wireless communication capabilities to transfer arterial oxygen saturation (SpO_2), heart rate (HR), body acceleration, and posture information to a PDA. It has the potential for use in combat casualty care, such as for remote triage, and by first responders, such as firefighters.**

I. Introduction

STEADY advances in noninvasive physiological sensing, hardware miniaturization, and wireless communication are leading to the development of new wearable technologies that have broad and important implications for civilian and military applications [1]-[2]. For example, the emerging development of compact, low-power, small-size, light- weight, and unobtrusive wearable devices may facilitate remote noninvasive monitoring of vital signs from soldiers during training exercises and combat. Telemetry of physiological information via a short-range wirelessly-linked personal area network can also be useful for firefighters, hazardous material workers, mountain climbers, or emergency first-responders operating in harsh and hazardous environments. The primary goals of such a wireless mobile platform would be to keep track of an injured person's vital signs, thus readily allowing the telemetry of physiological information to medical providers, and support emergency responders in making critical and often life saving decisions in order to expedite rescue operations. Having wearable physiological monitoring could offer far-forward medics numerous advantages, including the ability to determine a casualty's condition remotely without exposing the first responders to increased risks, quickly identifying the severity of injuries especially when the injured are greatly dispersed over large geographical terrains and often out-of-site, and continuously tracking the injured condition until they arrive safely at a medical care facility.

Several technical challenges must be overcome to address the unmet demand for long-term continuous physiological monitoring in the field. In order to design more compact sensors and improved wearable instrumentation, perhaps the most critical challenges are to develop more power efficient and low-weight devices. To become effective, these technologies must also be robust, comfortable to wear, and cost-effective. Additionally, before wearable devices can be used effectively in the field, they must become unobtrusive and should not hinder a person's mobility. Employing commercial off-the-shelf (COTS) solutions, for example finger pulse oximeters to monitor blood oxygenation and heart rate, or standard adhesive-type disposable electrodes for ECG monitoring, is not practical for many field applications because they limit mobility and can interfere with normal tasks.

A potentially attractive approach to aid emergency medical teams in remote triage operations is the use of a wearable pulse oximeter to wirelessly transmit heart rate (HR) and arterial oxygen saturation (SpO_2) to a remote location. Pulse oximetry is a widely accepted method that is used for noninvasive monitoring of SpO_2 and HR. The method is based on spectrophotometric measurements of changes in the optical absorption of deoxyhemoglobin (Hb) and oxyhemoglobin (HbO_2). Noninvasive spectrophotometric measurements of SpO_2 are performed in the visible (600-700nm) and near-infrared (700-1000nm) spectral regions. Pulse oximetry also relies on the detection of photoplethysmographic (PPG) signals produced by variations in the quantity of arterial blood that is associated with periodic contractions and relaxations of the heart. Measurements can be performed in either transmission or reflection modes. In transmission pulse oximetry, the sensor can be attached across a fingertip, foot, or earlobe. In this configuration, the light emitting diodes (LEDs) and photodetector (PD) in the sensor are placed on opposite sides of a peripheral pulsating vascular bed. Alternatively, in reflection pulse oximetry, the LEDs and PD are both mounted side-by-side on the same planar substrate to enable readings from multiple body locations where trans-illumination measurements are not feasible. Clinically, forehead reflection pulse oximetry has been used as an alternative approach to conventional transmission-based

Manuscript received April 3, 2006. This work is supported by the U.S. Army Medical Research and Material Command under Contract No. DAMD17-03-2-0006. The views, opinions and/or findings are those of the author and should not be construed as an official Department of the Army position, policy, or decision, unless so designated by other documentation.

*Corresponding author – Y. Mendelson is a Professor in the Department of Biomedical Engineering, Worcester Polytechnic Institute, Worcester, MA 01609 USA (phone: 508-831-5103; fax: 508-831-5541; e-mail: ym@wpi.edu).

R. J. Duckworth is a Professor in the Department of Electrical and Computer Engineering, Worcester Polytechnic Institute, Worcester, MA 01609 USA (rjduck@ece.wpi.edu).

G. Comtois is a M. S. student in the Department of Biomedical Engineering, Worcester Polytechnic Institute, Worcester, MA 01609 USA (comtoisg@wpi.edu).

1-4244-0033-3/06/$20.00 ©2006 IEEE.

APPLE 1034

oximetry when peripheral circulation to the extremities is compromised.

Pulse oximetry was initially intended for in-hospital use on patients undergoing or recovering from surgery. During the past few years, several companies have developed smaller pulse oximeters, some including data transmission via telemetry, to further expand the applications of pulse oximetry. For example, battery-operated pulse oximeters are now attached to patients during emergency transport as they are being moved from a remote location to a hospital, or between hospital wards. Some companies are also offering smaller units with improved electronic filtering of noisy PPG signals.

Several reports described the development of a wireless pulse oximeter that may be suitable for remote physiological monitoring [3]-[4]. Despite the steady progress in miniaturization of pulse oximeters over the years, to date, the most significant limitation is battery longevity and lack of telemetric communication. In this paper, we describe a prototype forehead-based reflectance pulse oximeter suitable for remote triage applications.

II. System Architecture

The prototype system, depicted in Fig. 1, consists of a body-worn pulse oximeter that receives and processes the PPG signals measured by a small (ϕ = 22mm) and lightweight (4.5g) optical reflectance transducer. The system

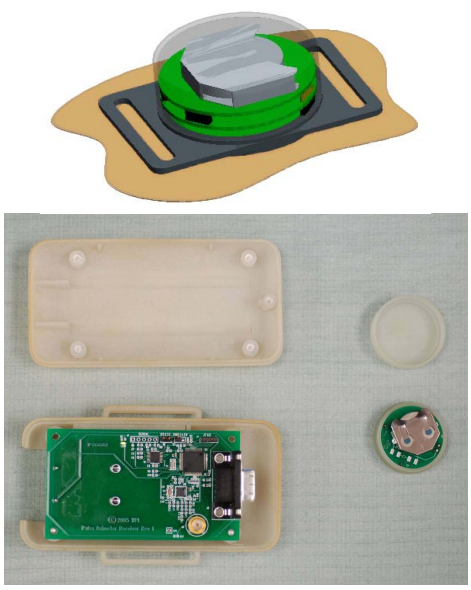

Fig. 1. (Top) Attachment of Sensor Module to the skin; (Bottom) photograph of the Receiver Module (left) and Sensor Module (right).

consists of three units: A Sensor Module, consisting of the optical transducer, a stack of round PCBs, and a coin-cell battery. The information acquired by the Sensor Module is transmitted wirelessly via an RF link over a short range to a body-worn Receiver Module. The data processed by the Receiver Module can be transmitted wirelessly to a PDA. The PDA can monitor multiple wearable pulse oximeters simultaneously and allows medics to collect vital physiological information to enhance their ability to extend more effective care to those with the most urgent needs. The system can be programmed to alert on alarm conditions, such as sudden trauma, or physiological values out of their normal range. It also has the potential for use in combat casualty care, such as for remote triage, and for use by first responders, such as firefighters.

Key features of this system are small-size, robustness, and low-power consumption, which are essential attributes of wearable physiological devices, especially for military applications. The system block diagram (Fig. 2), is described in more detail below.

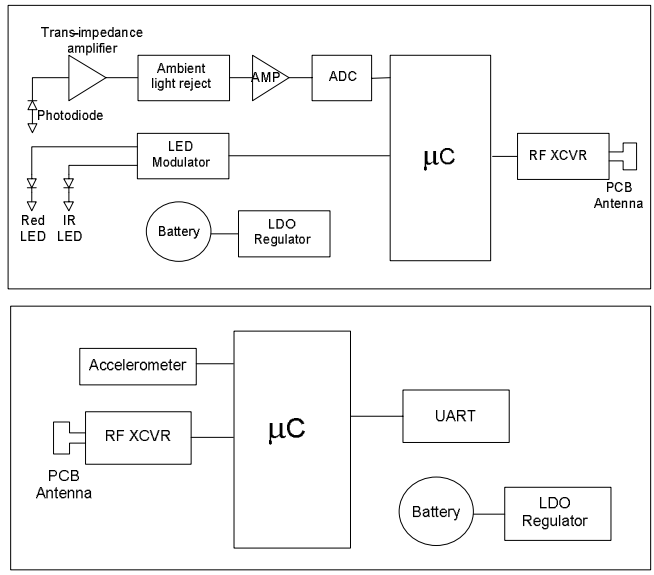

Fig. 2. System block diagram of the wearable, wireless, pulse oximeter. Sensor Module (top), Receiver Module (bottom).

Sensor Module: The Sensor Module contains analog signal processing circuitry, ADC, an embedded microcontroller, and a RF transceiver. The unit is small enough so the entire module can be integrated into a headband or a helmet. The unit is powered by a CR2032 type coin cell battery with 220mAh capacity, providing at least 5 days of operation.

Receiver Module: The Receiver Module contains an embedded microcontroller, RF transceiver for communicating with the Sensor Module, and a Universal Asynchronous Receive Transmit (UART) for connection to a PC. Signals acquired by the Sensor Module are received by the embedded microcontroller which synchronously converts the corresponding PD output to R and IR PPG signals. Dedicated software is used to filter the signals and compute SpO_2 and HR based on the relative amplitude and frequency content of the reflected PPG signals. A tri-axis MEMS accelerometer detects changes in body activity, and the information obtained through the tilt sensing property of the accelerometer is used to determine the orientation of the person wearing the device.

To facilitate bi-directional wireless communications between the Receiver Module and a PDA, we used the DPAC Airborne™ LAN node module (DPAC Technologies, Garden Grove, CA). The DPAC module operates at a frequency of 2.4GHz, is 802.11b wireless compliant, and has a relatively small (1.6 × 1.17 × 0.46 inches) footprint. The wireless module runs off a 3.7VDC and includes a built-in

TCP/IP stack, a radio, a base-band processor, an application processor, and software for a "drop-in" WiFi application. It has the advantage of being a plug-and-play device that does not require any programming and can connect with other devices through a standard UART.

PDA: The PDA was selected based on size, weight, and power consumption. Furthermore, the ability to carry the user interface with the medic also allows for greater flexibility during deployment. We chose the HP iPAQ h4150 PDA because it can support both 802.11b and Bluetooth™ wireless communication. It contains a modest amount of storage and has sufficient computational resources for the intended application. The use of a PDA as a local terminal also provides a low-cost touch screen interface. The user-friendly touch screen of the PDA offers additional flexibility. It enables multiple controls to occupy the same physical space and the controls appear only when needed. Additionally, a touch screen reduces development cost and time, because no external hardware is required. The data from the wireless-enabled PDA can also be downloaded or streamed to a remote base station via Bluetooth or other wireless communication protocols. The PDA can also serve to temporarily store vital medical information received from the wearable unit.

A dedicated National Instruments LabVIEW program was developed to control all interactions between the PDA and the wearable unit via a graphical user interface (GUI). One part of the LabVIEW software is used to control the flow of information through the 802.11b radio system on the PDA. A number of LabVIEW VIs programs are used to establish a connection, exchange data, and close the connection between the wearable pulse oximeter and the PDA. The LabVIEW program interacts with the Windows CE™ drivers of the PDA's wireless system. The PDA has special drivers provided by the manufacturer that are used by Windows CE™ to interface with the 802.11b radio hardware. The LabVIEW program interacts with Windows CE™ on a higher level and allows Windows CE™ to handle the drivers and the direct control of the radio hardware.

The user interacts with the wearable system using a simple GUI, as depicted in Fig. 3.

Fig. 3. Sample PDA Graphical User Interface (GUI).

The GUI was configured to present the input and output information to the user and allows easy activation of various functions. In cases of multiple wearable devices, it also allows the user to select which individual to monitor prior to initiating the wireless connection. Once a specific wearable unit is selected, the user connects to the remote device via the System Control panel that manages the connection and sensor control buttons. The GUI also displays the subject's vital signs, activity level, body orientation, and a scrollable PPG waveform that is transmitted by the wearable device.

The stream of data received from the wearable unit is distributed to various locations on the PDA's graphical display. The most prominent portion of the GUI display is the scrolling PPG waveform, shown in Fig. 3. Numerical SpO_2 and HR values are displayed is separate indicator windows. A separate tri-color indicator is used to annotate the subject's activity level measured by the wearable accelerometer. This activity level was color coded using green, yellow, or red to indicate low or no activity, moderate activity, or high activity, respectively. In addition, the subject's orientation is represented by a blue indicator that changes orientation according to body posture. Alarm limits could be set to give off a warning sign if the physiological information exceeds preset safety limits.

One of the unique features of this PDA-based wireless system architecture is the flexibility to operate in a free roaming mode. In this ad-hoc configuration, the system's integrity depends only on the distance between each node. This allows the PDA to communicate with a remote unit that is beyond the PDA's wireless range. The ad-hoc network would therefore allow medical personnel to quickly distribute sensors to multiple causalities and begin immediate triage, thereby substantially simplifying and reducing deployment time.

Power Management: Several features were incorporated into the design in order to minimize the power consumption of the wearable system. The most stringent consideration was the total operating power required by the Sensor Module, which has to drive the R and IR LEDs, process the data, and transmit this information wirelessly to the Receive Module. To keep the overall size of the Sensor Module as small as, it was designed to run on a watch style coin-cell battery.

It should be noted that low power management without compromising signal quality is an essential requirement in optimizing the design of wearable pulse oximeter. Commercially available transducers used with transmission and reflection pulse oximeters employ high brightness LEDs and a small PD element, typically with an active area ranging between 12 to 15mm^2. One approach to lowering the power consumption of a wireless pulse oximeter, which is dominated by the current required to drive the LEDs, is to reduce the LED duty cycle. Alternatively, minimizing the drive currents supplied to the R and IR LEDs can also achieve a significant reduction in power consumption. However, with reduced current drive, there can be a direct impact on the quality of the detected PPGs. Furthermore, since most of the light emitted from the LEDs is diffused by the skin and subcutaneous tissues, in a predominantly forward-scattering direction, only a small fraction of the incident light is normally backscattered from the skin. In

addition, the backscattered light intensity is distributed over a region that is concentric with respect to the LEDs. Consequently, the performance of reflectance pulse oximetry using a small PD area is significantly degraded. To overcome this limitation, we showed that a concentric array of either discrete PDs, or an annularly-shaped PD ring, could be used to increase the amount of backscattered light detected by a reflectance type pulse oximeter sensor [5]-[7].

Besides a low-power consuming sensor, afforded by lowering the driving currents of the LEDs, a low duty cycle was employed to achieve a balance between low power consumption and adequate performance. In the event that continuous monitoring is not required, more power can be conserved by placing the device in an ultra low-power standby mode. In this mode, the radio is normally turned off and is only enabled for a periodic beacon to maintain network association. Moreover, a decision to activate the wearable pulse oximeter can be made automatically in the event of a patient alarm, or based on the activity level and posture information derived from the on-board accelerometer. The wireless pulse oximeter can also be activated or deactivated remotely by a medic as needed, thereby further minimizing power consumption.

III. In Vivo Evaluations

Initial laboratory evaluations of the wearable pulse oximeter included simultaneous HR and SpO_2 measurements. The Sensor Module was positioned on the forehead using an elastic headband. Baseline recordings were made while the subject was resting comfortably and breathing at a normal tidal rate. Two intermittent recordings were also acquired while the subject held his breath for about 30 seconds. Fig. 4 displays about 4 minutes of SpO_2 and HR recordings acquired simultaneously by the sensor.

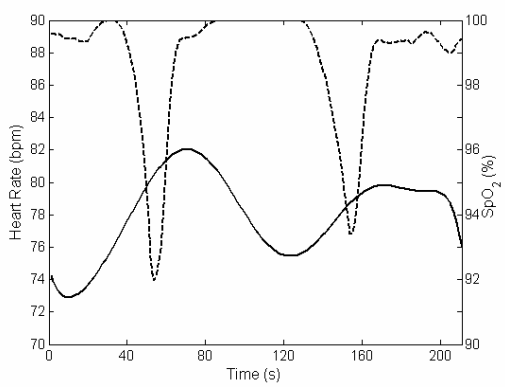

Fig. 4. Typical HR (solid line) and SpO_2 (dashed line) recording of two voluntary hypoxic episodes.

The pronounced drops in SpO_2 and corresponding increases in HR values coincide with the hypoxic events associated with the two breath holding episodes.

IV. Discussion

The emerging development of compact, low power, small size, light weight, and unobtrusive wearable devices can facilitate remote noninvasive monitoring of vital physiological signs. Wireless physiological information can be useful to monitor soldiers during training exercises and combat missions, and help emergency first-responders operating in harsh and hazardous environments. Similarly, wearable physiological devices could become critical in helping to save lives following a civilian mass casualty. The primary goal of such a wireless mobile platform would be to keep track of an injured person's vital signs via a short-range wirelessly-linked personal area network, thus readily allowing RF telemetry of vital physiological information to command units and remote off-site base stations for continuous real-time monitoring by medical experts.

The preliminary bench testing plotted in Fig. 4 showed that the SpO_2 and HR readings are within an acceptable clinical range. Similarly, the transient changes measured during the two breath holding maneuvers confirmed that the response time of the custom pulse oximeter is adequate for detecting hypoxic episodes.

V. Conclusion

A wireless, wearable, reflectance pulse oximeter has been developed based on a small forehead-mounted sensor. The battery-operated device employs a lightweight optical reflectance sensor and incorporates an annular photodetector to reduce power consumption. The system has short range wireless communication capabilities to transfer SpO_2, HR, body acceleration, and posture information to a PDA carried by medics or first responders. The information could enhance the ability of first responders to extend more effective medical care, thereby saving the lives of critically injured persons.

Acknowledgment

The authors would like to acknowledge the financial support provided by the U.S. Army Medical Research and Material Command referenced.

References

[1] G. S. F. Ling, B. K. Day, P. Rhee, and J. M. Ecklund, "In search of technological solutions to battlefield management of combat casualties," *SPIE Conference on Battlefield Biomedical Technologies*, SPIE vol. 3712, Apr. 1999.

[2] D. Malan, T. Fulford-Jones, M. Welsh, and S. Moulton, "CodeBlue: An ad-hoc sensor network infrastructure for emergency medical care," *International Workshop on Wearable and Implantable Body Sensor Networks*, 2004.

[3] U. Anliker et al., "AMON: A wearable multiparameter medical monitoring and alert system," *IEEE Trans. on Information Technology in Biomedicine*, *8*(4), 2004.

[4] Y. Mendelson and V. Floroff, "A PDA based *ad-hoc* mobile wireless pulse oximeter," *Proc. IASTED International Conference Telehealth 2005*, Banff, Canada, 2005.

[5] Y. Mendelson and C. J. Pujary, "Minimization of LED power consumption in the design of a wearable pulse oximeter," *IASTED International Conference BioMED 2003*, Salzburg, Austria, 2003.

[6] Y. Mendelson and C. J. Pujary, "Measurement site and photodetector size considerations in optimizing power consumption of a wearable reflectance pulse oximeter," *Proc. of the 25th Annual International IEEE/EMBS Conference*, Cancun, Mexico, 2003.

[7] P. Branche and Y. Mendelson, "Signal quality and power consumption of a new prototype reflectance pulse oximeter sensor," *Proc. of the 31th Annual Northeast Bioengineering Conference*, Hoboken, NJ, 2005.