UNITED STATES PATENT AND TRADEMARK OFFICE

BEFORE THE PATENT TRIAL AND APPEAL BOARD

APPLE INC.,
Petitioner,

v.

MASIMO CORPORATION,
Patent Owner.

Case IPR2022-01291
U.S. Patent 10,687,745

PETITIONER'S REPLY TO PATENT OWNER'S RESPONSE

TABLE OF CONTENTS

I. IWAMIYA-SARANTOS RENDERS OBVIOUS CLAIMS 1 AND 9 (GROUND 1A) AND IWAMIYA-SARANTOS-VENKATRAMAN RENDERS OBVIOUS CLAIMS 15, 18, 20, AND 27 (GROUND 1B).....3

A. Iwamiya-Sarantos renders obvious a "surface comprising a dark-colored coating" (elements [1.4] and [20.4]) 3

B. Iwamiya-Sarantos-Venkatraman renders obvious that "the plurality of photodiodes are arranged in an array having a spatial configuration corresponding to a shape of the portion of the tissue measurement site encircled by the light block" (element [15.4]) 7

C. Iwamiya-Sarantos (with or without Venkatraman) renders obvious measuring oxygen saturation at the wrist (claims 9 and 18) and adding a second wavelength (claim 27) 11

1. Sarantos discloses and renders obvious measuring oxygen saturation at the wrist 11

2. A POSITA would have known how to make predictable adaptations to Iwamiya's device that would allow the device in the Iwamiya-Sarantos combination to measure oxygen saturation 13

3. The POR mischaracterizes Iwamiya in asserting that it teaches away from measuring blood oxygen saturation using red and infrared light.....14

4. A POSITA would have reasonably expected success in modifying Iwamiya to measure oxygen saturation at the wrist 15

D. Apple demonstrated that Iwamiya-Sarantos-Venkatraman render obvious claim 20 and 27, and all their elements 23

II. SARANTOS-SHIE RENDERS OBVIOUS CLAIMS 1, 9, 15, AND 18 (GROUND 2A) AND SARANTOS-SHIE-VENKATRAMAN RENDERS OBVIOUS CLAIMS 15, 18, 20, AND 27 (GROUND 2B).....24

MASIMO 2039
Apple v. Masimo
IPR2024-00243

A. Sarantos-Shie renders obvious a "first shape" and a different "second shape" (elements [1.1]-[1.2] and [20.1]-[20.2]).....24

1. Shie discloses changing a first shape of light into a second shape.....24

2. A POSITA would have been motivated to combine Sarantos and Shie and would have reasonably expected success.....25

B. Sarantos-Shie (with or without Venkatraman) renders obvious a "light block having a circular shape" (element [15.3]).....26

C. Sarantos-Shie (with or without Venkatraman) renders obvious "the plurality of photodiodes are arranged in an array having a spatial configuration corresponding to a shape of the portion of the tissue measurement site encircled by the light block" (elemen [15.4]).....27

D. Sarantos-Shie (with or without Venkatraman) renders obvious measuring oxygen saturation at the wrist (claims 9 and 18).....28

III. CONCLUSION.....28

MASIMO 2039
Apple v. Masimo
IPR2024-00243

EXHIBITS

APPLE-1001	U.S. Pat. No. 10,687,745 to Al-Ali ("the '745 Patent")
APPLE-1002	Prosecution History of the '745 Patent (Serial No. 16/835,772)
APPLE-1003	Declaration of Dr. Brian Anthony
APPLE-1004	U.S. Pat. No. 8,670,819 ("Iwamiya")
APPLE-1005	U.S. Pat. No. 9,392,946 ("Sarantos")
APPLE-1006	U.S. Pub. No. 2014/0275854 ("Venkataraman")
APPLE-1007	U.S. Pat. No. 6,483,976 ("Shie")
APPLE-1008	U.S. Pat. No. 6,801,799 ("Mendelson-799")
APPLE-1009	U.S. Pub. No. 2015/0018647 ("Mandel")
APPLE-1010	U.S. Pub. No. 2009/0275810 ("Ayers")
APPLE-1011	PCT. Pub. No. 2011/051888 ("Ackermans")
APPLE-1012	U.S. Pat. No. 6,158,245 ("Savant")
APPLE-1013	Design of Pulse Oximeters, J.G. Webster; Institution of Physics Publishing, 1997 ("Webster")
APPLE-1014	U.S. Pub. No. 2009/0054112 ("Cybart")
APPLE-1015	U.S. Pat. No. 5,893,364 ("Haar")
APPLE-1016	U.S. Pat. No. 5,952,084 ("Anderson")
APPLE-1017	U.S. Pat. No. 10,470,695 (the "'695 patent")
APPLE-1018	*Apple v. Masimo*, Case No. IPR2020-01722, Paper 29 (Final Written Decision) (PTAB May 5, 2022) (the "'695 FWD")

MASIMO 2039
Apple v. Masimo
IPR2024-00243

APPLE-1019 – APPLE-1030 RESERVED

APPLE-1031 *Masimo Corporation, et al. v. Apple Inc*., Redacted Complaint, ITC Inv. No. 337-TA-1276

APPLE-1032 *Interim Procedure for Discretionary Denials in AIA Post-Grant Proceedings with Parallel District Court Litigation*, issued June 21, 2022 ("Interim Guidance")

APPLE-1033 Final Initial Determination on Violation of Section 337, Public Version, ITC Inv. No. 337-TA-1276, January 10, 2023

APPLE-1034 Emails re Masimo's Request for Authorization to Motion for Additional Discovery

APPLE-1035 Protective Order

APPLE-1036 CONFIDENTIAL - ITC Inv. No. 337-TA-1276 Hearing Transcript of Dr. Ueyn Block

APPLE-1037 CONFIDENTIAL - ITC Inv. No. 337-TA-1276 Hearing Transcript of Dr. Saahil Mehra

APPLE-1038 ITC Inv. No. 337-TA-1276 Exhibit RX-0335 (U.S. Pat. No. 5,830,137 ("Scharf"))

APPLE-1039 ITC Inv. No. 337-TA-1276 Exhibit RX-0504 (Austin Wareing, Optimization of Reflectance-Mode Pulse Oximeter Sensors)

APPLE-1040 ITC Inv. No. 337-TA-1276 Exhibit RX-0508 (Jianchu Yao and Steve Warren, Stimulating Student Learning with a Novel "In-House" Pulse Oximeter Design (2005))

APPLE-1041 ITC Inv. No. 337-TA-1276 Exhibit RX-0632

APPLE-1042 CONFIDENTIAL - Supplemental Declaration of Dr. Brian Anthony

MASIMO 2039
Apple v. Masimo
IPR2024-00243

APPLE-1043	Excerpt of The American Heritage Dictionary of the English Language, Fifth Edition, Houghton Mifflin Harcourt Publishing Company (2011)
APPLE-1044	Excerpt of Collins Dictionary, HarperCollins Publishers (2010)
APPLE-1045	Excerpt of Merriam-Webster's Collegiate Dictionary, Eleventh Edition, Merriam-Webster, Incorporated (2014)
APPLE-1046	Excerpts from Bronzino, The Biomedical Engineering Handbook, CRC Press, Inc. (1995) ("Bronzino")
APPLE-1047	U.S. Patent No. 6,014,576 to Raley
APPLE-1048	Severinghaus et al., Recent Developments in Pulse Oximetry, Anesthesiology, Vol. 76, No. 6 (June 1992)
APPLE-1049	Duffy, MIO Alpha BLE Review, PC Magazine (Jan. 28, 2013) available at https://www.pcmag.com/reviews/mio-alpha-ble
APPLE-1050	Pang et al., A Neo-Reflective Wrist Pulse Oximeter, IEEE Access, Volume 2 (January 12, 2015)
APPLE-1051	Li et al., A Wireless Reflectance Pulse Oximeter With Digital Baseline Control for Unfiltered Photoplethysmograms, IEEE Transactions on Biomedical Circuits and Systems, Vol. 6, No. 3 (June 2012)
APPLE-1052	U.S. Patent Application Publication No. 2006/0253010 to Brady et al.
APPLE-1053	Cai et al., Implementation of a Wireless Pulse Oximeter Based on Wrist Band Sensor, 2010 3rd International Conference on Biomedical Engineering and Informatics (BMEI 2010)
APPLE-1054	International Publication No. WO 2001/17421 to Lindberg et al.
APPLE-1055	Maattala et al., Optimum Place for Measuring Pulse Oximeter Signal in Wireless Sensor-Belt or Wrist-Band, 2007 International

MASIMO 2039
Apple v. Masimo
IPR2024-00243

	Conference on Convergence Information Technology, IEEE (2007)
APPLE-1056	Fontaine et al., Reflectance-Based Pulse Oximeter for the Chest and Wrist, Worchester Polytechnic Institute (April 2013) *available at* https://digital.wpi.edu/show/6969z2326
APPLE-1057	Stein, "Withings Pulse O2 review: Fitness band plus heart rate monitor checks blood oxygen, too," CNET.com (April 25, 2014), available at https://www.cnet.com/reviews/withings-pulse-o2-review/
APPLE-1058	U.S. Patent No. 7,468,036 to Rulkov et al.
APPLE-1059	CONFIDENTIAL - Transcript of the Deposition of Dr. R. James Duckworth (August 9, 2023)
APPLE-1060	Mendelson et al., A Wearable Reflectance Pulse Oximeter for Remote Physiological Monitoring, Proceedings of the 28th IEEE EMBS Annual International Conference (Sept. 3, 2006)
APPLE-1061	International Publication No. WO 2011/051888 to Ackermans et al.
APPLE-1062	U.S. Patent Application Publication No. 2005/0116820 to Goldreich
APPLE-1063	International Publication No. WO 2012/140559 to Shmueli et al.
APPLE-1064	U.S. Patent No. 7,650,176 to Sarussi et al.
APPLE-1065	U.S. Patent Application Publication No. 2002/0095092 to Kondo et al.
APPLE-1066	U.S. Patent Application Publication No. 2015/0355604 to Fraser et al.
APPLE-1067	U.S. Patent No. 6,580,086 to Schulz et al.

MASIMO 2039
Apple v. Masimo
IPR2024-00243

APPLE-1068	U.S. Patent Application Publication No. 2013/0267854 to Johnson et al.
APPLE-1069	ITC Inv. No. 337-TA-1276 Exhibit RX-0498 (Takatani et al., Optical Oximetry Sensors for Whole Blood and Tissue, IEEE Engineering in Medicine and Biology (June/July 1994))
APPLE-1070	U.S. Patent No. 5,164,858 to Aguilera, Jr. et al.
APPLE-1071	U.S. Patent Application Publication No. 2005/0267346 to Faber et al.
APPLE-1072	U.S. Patent No. 9,316,495 to Suzuki et al.
APPLE-1073	U.S. Patent Application Publication No. 2014/0051955 to Tiao et al.
APPLE-1074	U.S. Patent Application Publication No. 2016/0058312 to Han et al.
APPLE-1075	U.S. Patent Application Publication No. 2010/0261986 to Chin et al.
APPLE-1076	Beam Shaping with Cylindrical Lenses, *available at* https://www.newport.com/n/beam-shaping-with-cylindrical-lenses
APPLE-1077	Dickey, Laser Beam Shaping Theory and Techniques, Second Edition, Taylor & Francis Group, LLC (2014)
APPLE-1078	Lee et al., Micro-LED Technologies and Applications, Information Display (June 2016)
APPLE-1079	U.S. Patent No. 6,398,727 to Bui et al.
APPLE-1080	U.S. Patent Application Publication No. 2014/0323829 to LeBoeuf et al.

MASIMO 2039
Apple v. Masimo
IPR2024-00243

Masimo's arguments in the POR fail because, at bottom, the challenged claims of the '745 Patent are simply not innovative. Masimo's leading arguments focus not on any features of independent claims 1, 15, or 20, but rather on a pair of dependent claims (i.e., claims 9 and 18) that further specify that the "physiological parameter" determined at the wrist is "oxygen saturation." But determining oxygen saturation at the wrist was not new in the '745 Patent and Masimo does not argue otherwise. Nor could it. The record is replete with prior art that achieved this task long before the '745 Patent. Masimo nonetheless spends dozens of pages attempting to dismiss the prior art through argument that a POSITA somehow would have lacked a reasonable expectation of success in determining oxygen saturation at the wrist.

Masimo's arguments are ironic, however, given that the '745 Patent itself describes no solutions for addressing the challenges that Masimo only now alleges must be overcome to successfully measure oxygen saturation at the wrist. Indeed, the '745 specification never once acknowledges any such challenges. The '745 specification merely lists the wrist as one suitable measurement site among others, without mention of even a single adaptation to the disclosed reflectance sensor that would ensure successful measurements at the wrist apart from any other site. If Masimo's own specification is enabling—as Masimo's expert, Dr. Duckworth, contends it is—then so is the prior art, and a POSITA would have reasonably

MASIMO 2039
Apple v. Masimo
IPR2024-00243

expected success implementing such features.

Tellingly, the only basis offered for Masimo's reasonable expectation of success narrative is evidence of Apple's own successes in overcoming challenges in developing pulse oximetry for the Apple Watch. But in so doing, Masimo ignores substantial evidence that was produced to Masimo before the POR and that demonstrates how these challenges stemmed from design requirements that went well beyond any requirements recited in the claims of the '745 Patent. Worse, Masimo and Duckworth failed to account for multiple prior art publications known by a POSITA that describe experimental results confirming the feasibility of measuring oxygen saturation at the wrist before the '745 Patent.

Finally, tucked behind the arguments on dependent claims 9 and 18, Masimo raises just a single substantive argument against each of independent claims 1, 15, and 20 in Grounds 1A-1B. Each of these arguments was previously presented unsuccessfully in the POPR, and the same arguments were previously rejected by the ITC. Masimo raises similar arguments in Grounds 2A-2B. But for the reasons explained in detail below, none of Masimo's arguments has merit.[1] Apple thus submits that the challenged claims are obvious and should be cancelled.

[1] For ease of review, Apple first addresses in this Reply Masimo's substantive arguments on the independent claims before turning to dependent claims 9 and 18.

MASIMO 2039
Apple v. Masimo
IPR2024-00243

I. IWAMIYA-SARANTOS RENDERS OBVIOUS CLAIMS 1 AND 9 (GROUND 1A) AND IWAMIYA-SARANTOS-VENKATRAMAN RENDERS OBVIOUS CLAIMS 15, 18, 20, AND 27 (GROUND 1B)

A. Iwamiya-Sarantos renders obvious a "surface comprising a dark-colored coating" (elements [1.4] and [20.4])

Masimo's argument that the Iwamiya-Sarantos combination "rests on the unsupported assumption that Iwamiya's light shielding frame 18 would not, in fact, provide the light shielding function disclosed in Iwamiya" is baseless.[2] POR, 44. Apple has never disputed that Iwamiya's original frame 18 was intended to block unwanted light from reaching the photodiodes. APPLE-1004, 8:38-42. Iwamiya instead lacks express disclosure of materials that would be suitable to achieve the desired "light shielding" function of frame 18. Pet., 15-17; APPLE-1059, 88:12-94:8. Iwamiya left the selection of a suitable material for frame 18 to a POSITA, and the Petition specifically explained that "[a] POSITA would have been motivated to employ an in-mold label or other black or opaque material as disclosed by Sarantos in the light shielding frame 18 of Iwamiya to serve the purpose indicated by the component's name: shielding the photodiodes 9 from stray light[] … ." Pet., 16.

[2] Masimo's substantially similar argument on element [1.4] was also rejected at the ITC, as it was in the Institution Decision. EX2093, 226-228; Decision, 18-21.

MASIMO 2039
Apple v. Masimo
IPR2024-00243

The use of dark-colored coatings for light shielding as taught in Sarantos was common practice well before the '745 Patent. APPLE-1005, 17:1-25; *see also* APPLE-1013, 96-97[3], 111; APPLE-1067, 9:58-10:23; APPLE-1042, ¶7. Accordingly, a POSITA would have found it obvious to apply a dark-colored coating to Iwamiya's frame 18 in any suitable manner that would ensure light is blocked from reaching the photodiodes except through the opening permitted by optical filter 17, e.g., by coating an exterior of the frame 18 with a dark, light-absorbing material. APPLE-1005, 17:1-25; APPLE-1042, ¶8.

[3] Numbers refer to page numbers of the PDF document.

MASIMO 2039
Apple v. Masimo
IPR2024-00243

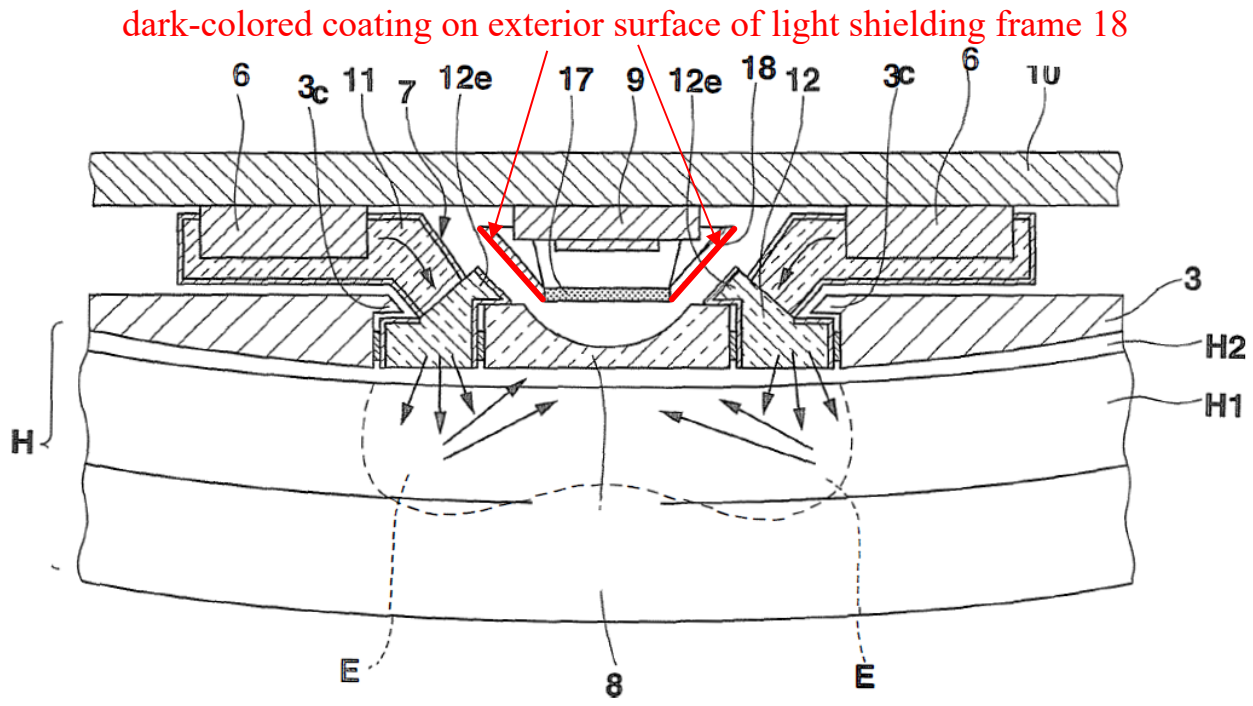

FIG.4

APPLE-1004, FIG. 4[4]

A POSITA also would have found the selection of a light-absorbing material for frame 18 to involve a merely routine design choice for a POSITA, especially given that light-shielding materials must either (1) absorb or (2) reflect light, and the use of a "dark" coating would be particularly obvious to absorb the broadest spectrum of light. *KSR Int'l Co. v. Teleflex Inc.*, 550 U.S. 398, 421 (2007) ("When… there are a finite number of identified, predictable solutions, a person of

[4] Annotations and color added to figures unless otherwise noted.

MASIMO 2039
Apple v. Masimo
IPR2024-00243

ordinary skill has good reason to pursue the known options within his or her technical grasp."); APPLE-1042, ¶8; APPLE-1059, 94:14-95:10.

Masimo suggests in the POR that a POSITA would be led by Iwamiya to select a reflective rather than absorptive material for use on the light-shielding frame 18. POR, 46-50. But Masimo's suggestion is wrong/unsupported, and Dr. Anthony explained in detail multiple reasons why this is so. APPLE-1042, ¶¶9-14. **First**, a dark-colored coating that absorbs light as taught in Sarantos would be preferable to a reflective material for shielding light with Iwamiya's frame 18 since the absorptive material would *reduce* reflections and light scatter in the empty space surrounding frame 18. APPLE-1042, ¶¶9, 12. In particular, the dark-colored coating would reduce the amount of scattered/reflected light from the space surrounding frame 18 from reflecting back through optical filter 17 to the photodiodes, which would increase noise and risk reducing sensor accuracy. *Id.* Duckworth not only failed to address this issue but refused even to discuss it during his deposition. APPLE-1059, 95:11-96:17. **Second**, Masimo's argument that a POSITA would select a reflective material for frame 18 merely because light guiding ring 11 and diffusion ring 12 include reflective layers 13, 15 does not follow. APPLE-1004, 6:62-7:3, 7:41-49; *see also id.*, 6:10-14, 7:14-24, 10:44-49, 11:55-12:36. Rings 11, 12 are distinct from frame 18, and the reflective layers 13, 15 serve far different functions of preventing light leakage to an exterior of rings

11, 12 and guiding light through rings 11, 12 than the light shielding function of frame 18. APPLE-1004, 6:67-7:3, 7:45-49; APPLE-1042, ¶10. **Third**, Masimo's suggestion that light-shielding frame 18 must be reflective since holder portion 43 is reflective also does not follow. These components are not even used in the same embodiments, and differences in the structures of these embodiments confirms that frame 18 need not have a reflective exterior. APPLE-1004, 18:61-65, 28:64-29:1, 39:20-24, FIGS. 4, 13; APPLE-1059, 88:1-94:8; APPLE-1042, ¶¶11-13. Neither Masimo nor Mr. Duckworth acknowledges these differences. And even if design tradeoffs exist between the selection of a dark-colored coating and a reflective material, these tradeoffs would only render each option obvious—not preclude obviousness of the first option as Masimo would have it. *Allied Erecting & Dismantling Co. v. Genesis Attachments*, LLC, 825 F.3d 1373, 1381 (Fed. Cir. 2016) ("[A] given course of action often has simultaneous advantages and disadvantages, and this does not necessarily obviate motivation to combine."); *Winner Int'l Royalty Corp. v. Wang*, 202 F.3d 1340, 1349 n.8 (Fed. Cir. 2000) ("should not nullify its use as a basis to modify"); APPLE-1042, ¶14.

B. Iwamiya-Sarantos-Venkatraman renders obvious that "the plurality of photodiodes are arranged in an array having a spatial configuration corresponding to a shape of the portion of the tissue measurement site encircled by the light block" (element [15.4])

That Iwamiya's photodiodes 9 are arranged in a circular array having a

MASIMO 2039
Apple v. Masimo
IPR2024-00243

spatial configuration corresponding to a shape of the portion of the tissue measurement site encircled by the circular light block is evident from the fact that the photodiodes are "**disposed … on the same circumference** centered on an optical axis" of the circular light taking unit 8.[5] APPLE-1004, 14:36-41; APPLE-1042, ¶16; Pet., 23-24.

[5] Masimo's substantially similar argument on element [15.4] was also rejected at the ITC, where the ALJ found that Iwamiya "clearly" discloses these features. EX2093, 232-233.

MASIMO 2039
Apple v. Masimo
IPR2024-00243

photodiodes 9 arranged "on the same **circumference** centered on an optical axis" of the circular light taking unit 8

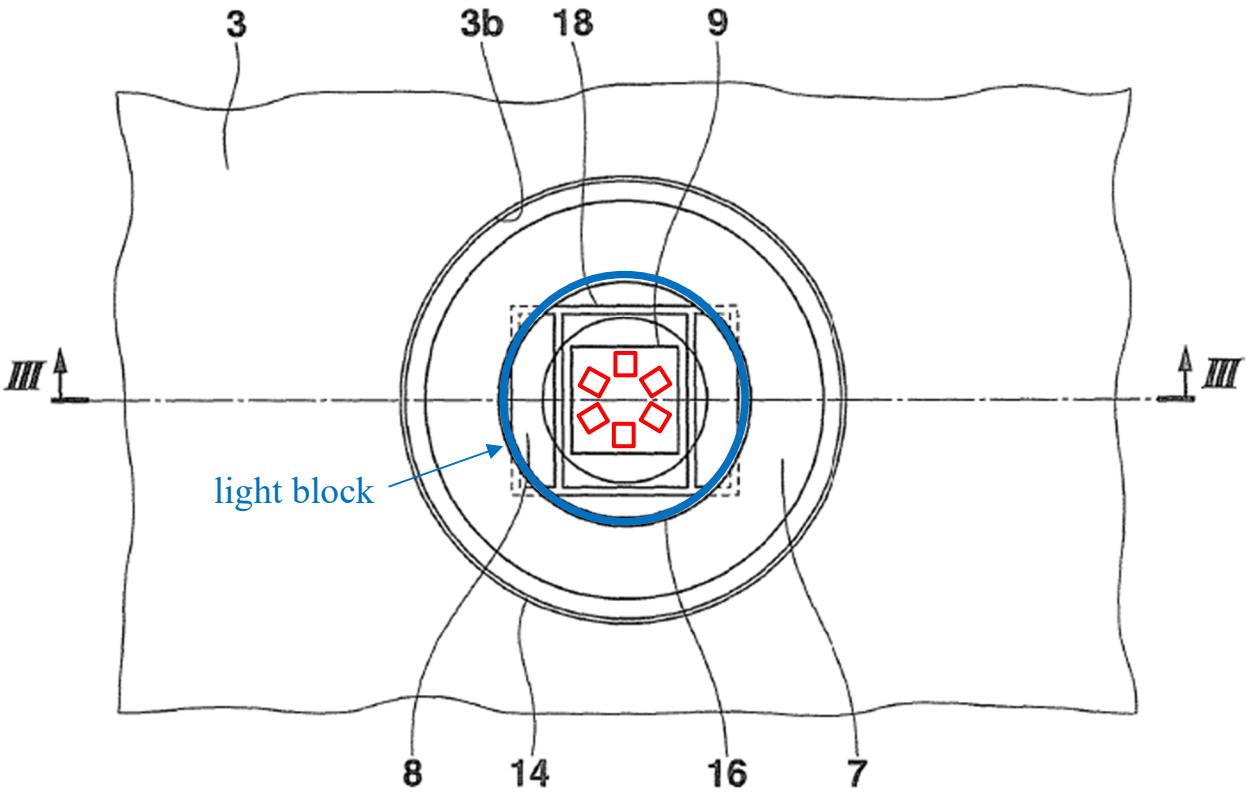

FIG.2

APPLE-1004, FIG. 2 (annotated according to Iwamiya's teachings)

Iwamiya never limits the number of photodiodes 9 that can be used in its device. APPLE-1042, ¶17. Iwamiya instead leaves the choice of the number of photodiodes to a POSITA, who would have known that more than just a "small plurality" of photodiodes (e.g., more than 2-3) were commonly employed in pulse oximeters before the '745 Patent (and would have found it obvious to use a greater number of photodiodes (e.g., six or more) to achieve known benefits such as

MASIMO 2039
Apple v. Masimo
IPR2024-00243

increasing the detection area and light sensitivity). *Id.; see, e.g.*, APPLE-1013, 107; APPLE-1008, 4:6-9, 4:59-62; APPLE-1060, 4; APPLE-1068, [0022], FIG. 1A.

Notably, the '745 specification also never expressly discloses a minimum or critical number of photodiodes that must be present to form the claimed array. APPLE-1042, ¶18. Masimo thus improperly seeks to hold the prior art to a higher standard of disclosure than the '745 patent itself. APPLE-1001, 9:27-30, 11:38-43; APPLE-1059, 97:22-102:17. In any event, Masimo the specific number of photodiodes alleged to be required by the claims is not even a patentable distinction in the first place. *E.I. du Pont de Nemours & Co. v. Synvina C.V.*, 904 F.3d 996, 1006 (Fed. Cir. 2018) ("'where the general conditions of a claim are disclosed in the prior art, it is not inventive to discover the optimum or workable ranges by routine experimentation'"). Indeed, it is settled law that a claimed range is rendered obvious both when the prior art range overlaps and even when it does not in the absence of criticality or unexpected results. *In re Peterson*, 315 F.3d 1325, 1329 (Fed. Cir. 2003); MPEP §2144.05. Iwamiya's disclosure of a plurality of photodiodes encompasses a range that renders the claim limitation obvious.

The claim term "correspond" also has broader meanings than those represented by the applicant to the Office during prosecution of the parent application. APPLE-1043, 3; APPLE-1044, 3; APPLE-1045, 3. Iwamiya's

MASIMO 2039
Apple v. Masimo
IPR2024-00243

photodiodes arranged "on the same circumference centered on an optical axis" of circular light taking unit 8 is consistent with the plain meaning of "correspond" at least because the photodiodes are in agreement, harmony, or conformity with the circular shape of the light taking unit 8 bounded by the circular light block. APPLE-1042, ¶19.

C. Iwamiya-Sarantos (with or without Venkatraman) renders obvious measuring oxygen saturation at the wrist (claims 9 and 18) and adding a second wavelength (claim 27)

1. Sarantos discloses and renders obvious measuring oxygen saturation at the wrist

As an initial matter, the POR's focus on whether Sarantos's own device measures oxygen saturation or just pulse rate is misdirected. POR, 20-21. The Petition relied on Sarantos in claims 9 and 18 not for the structures of Sarantos's own device, but rather for its reference to well-known techniques for measuring oxygen saturation using two wavelengths of light (i.e., red and infrared wavelengths). Pet., 19-20 (citing APPLE-1005, 13:40-14:22); *In re Etter*, 756 F.2d 852, 859 (Fed. Cir. 1985) (en banc) ("the criterion [is] not whether the references could be physically combined but whether the claimed inventions are rendered obvious by the teachings of the prior art as a whole"); *accord In re Mouttet*, 686 F.3d 1322, 1332 (Fed. Cir. 2012); APPLE-1042, ¶22. It is undisputed that Sarantos discloses these techniques regardless of whether Sarantos's own device

MASIMO 2039
Apple v. Masimo
IPR2024-00243

implements them.

Nonetheless, Sarantos clearly contemplates embodiments where its device would measure blood oxygenation levels using red and infrared light. APPLE-1042, ¶23. This is evident from Sarantos's express description of structural adaptations that can be made to accommodate multiple LEDs of different wavelengths. *See, e.g.*, APPLE-1005, 13:34-36, 13:44-14:22. The Board's institution decision thus correctly assessed that Sarantos expressly discloses these features. Decision, 22-23.

Sarantos's use of "green/yellow" light in preferred embodiments also does not constitute a teaching away. *Meiresonne v. Google, Inc.*, 849 F.3d 1379, 1382 (Fed. Cir. 2017) ("A reference that 'merely expresses a general preference for an alternative invention but does not criticize, discredit, or otherwise discourage investigation into' the claimed invention does not teach away."). A POSITA reviewing Sarantos's alternative embodiments for measuring blood oxygen levels at col. 13:36-14:22 would have understood and found obvious that the ratios/dimensions of Sarantos's HAR photodetectors could and would be suitably optimized for the detection of red/infrared light. APPLE-1042, ¶23. Sarantos never even expresses a preference, let alone criticizes, red/infrared light for measuring blood oxygen levels. *Id.*

MASIMO 2039
Apple v. Masimo
IPR2024-00243

2. A POSITA would have known how to make predictable adaptations to Iwamiya's device that would allow the device in the Iwamiya-Sarantos combination to measure oxygen saturation

Masimo's arguments that a POSITA would not have known how to modify Iwamiya's device to measure oxygen saturation levels improperly treats the POSITA as an automaton lacking ordinary creativity or knowledge of basic pulse oximetry techniques that had been developed decades before the '745 Patent. *Facebook, Inc. v. Windy City Innovations, LLC*, 973 F.3d 1321, 1343 (Fed. Cir. 2020) (quoting *KSR*, 550 U.S. at 421); *ClassCo, Inc. v. Apple, Inc.*, 838 F.3d 1214, 1219 (Fed. Cir. 2016); APPLE-1042, ¶24.

To be sure, although obviousness does not require a detailed explanation of every predictable structural modification that a POSITA would make to implement a proposed combination, the evidence here nonetheless confirms that a POSITA would have known how to adapt Iwamiya's device to measure blood oxygen levels using red/infrared light as taught in Sarantos. APPLE-1042, ¶25. Iwamiya's device already includes 940 nm infrared LEDs that would be suitable for measuring blood oxygen levels; it would have been obvious and straightforward to augment the device with one or more LEDs emitting red light, e.g., by adding one or more red LEDs or replacing one of Iwamiya's two original infrared LEDs with a red LED. *Id*. Likewise, Anthony explains that optimizing sensitivity of the

MASIMO 2039
Apple v. Masimo
IPR2024-00243

photodiodes for oxygen saturation, adapting the optical filter to pass both red and infrared light (or implementing an oximeter without such a filter), and performing basic signal processing algorithms for calculating oxygen saturation were all known, obvious, and well within the skill of a POSITA. *Id.; see, e.g.*, APPLE-1013, 94, 96; APPLE-1070, Abstract; APPLE-1071, [0052]; APPLE-1080, [0137].

3. The POR mischaracterizes Iwamiya in asserting that it teaches away from measuring blood oxygen saturation using red and infrared light

Iwamiya's disclosed embodiments focus on detecting a pulse wave for measuring a pulse rate (heart rate) using a **single** wavelength of infrared light at 940 nm. APPLE-1004, 1:62-2:6, 6:32-35. But as the Board correctly recognized in instituting IPR, Iwamiya never criticizes, discredits, or otherwise discourages the use of **two** wavelengths of red and infrared light **for the purpose of measuring oxygen saturation**. *Meiresonne*, 849 F.3d at 1382 ("criticize, discredit, or otherwise discourage"); Decision, 22-23. A POSITA looking to adapt Iwamiya to determine oxygen saturation would not have been led away from the use of red and infrared LEDs (or from implementing any of the other obvious adaptations previously discussed) that would allow the device to determine oxygen saturation apart from pulse rate. APPLE-1042, ¶26. Indeed, Iwamiya's preferred 940 nm wavelength light for pulse rate measurements could still be retained in the Iwamiya-Sarantos combination since 940 nm light is also commonly used for

MASIMO 2039
Apple v. Masimo
IPR2024-00243

determining oxygen saturation. *Id.*; APPLE-1013, 16, 52, 62-63, 73, 79-80; APPLE-1040, 4; APPLE-1056, 16; APPLE-1050, 1; APPLE-1053, 3-4; APPLE-1052, [0007]. A POSITA's desire to expand the capabilities of Iwamiya's device by adding a red wavelength to measure oxygen saturation in addition to pulse rate would have justified any reasonably necessary design tradeoffs. *Winner*, 202 F.3d at 1349 n.8.

4. A POSITA would have reasonably expected success in modifying Iwamiya to measure oxygen saturation at the wrist

The Petition cited Anthony's opinion from his first declaration that a "POSITA would have reasonably expected success in adapting Iwamiya's sensor" to measure oxygen saturation "because wrist-worn pulse oximetry sensors, such as that described in Sarantos, were well-known in the art." APPLE-1003, ¶48. The POR's belabored attempts to undermine this showing is baseless.

Even apart from Sarantos, the record includes well over a dozen references from before the '745 Patent that describe solutions for determining oxygen saturation at the wrist.[6] Anthony reviewed these references—including references

[6] The bulk of these references—including Exhibits APPLE-1050–APPLE-1056, APPLE-1058, APPLE-1061–APPLE-1066—were not previously submitted or available to the ALJ at the ITC proceeding involving the '745 Patent.

MASIMO 2039
Apple v. Masimo
IPR2024-00243

that were entered into the record before the POR and others that Apple identified responsive to Masimo's POR arguments—and explained how they further demonstrate that a POSITA would have reasonably expected success implementing the combinations to determine oxygen saturation at the wrist before the '745 Patent. APPLE-1042, ¶¶27-34 (citing APPLE-1039–APPLE-1041, APPLE-1050–APPLE-1056, APPLE-1058, APPLE-1061–APPLE-1066). A POSITA would have known of all these references since the law "presumes that all prior art references in the field of the invention are available to this hypothetical skilled artisan." *In re Carlson*, 983 F.2d 1032, 1037-38 (Fed. Cir. 1993) (a POSITA "is charged with knowledge of all the contents of the relevant prior art" and "is presumed to know all the pertinent prior art"); *In re Rouffet*, 149 F.3d 1350, 1357 (Fed. Cir. 1998).

Notably, the evidence reviewed by Anthony includes engineering and scientific papers describing actual studies and experimental results that confirm the feasibility of determining oxygen saturation at the wrist before the '745 Patent. *See, e.g.*, APPLE-1050, 2 ("another novel reflective wrist pulse oximeter that has been developed"); APPLE-1051, Abstract ("This sensor has demonstrated an ability to gather high-integrity data at fingertip, wrist, earlobe, palm, and temple locations from a group of 48 subjects (20 to 64 years old)."); APPLE-1053, Abstract ("The experimental results have confirmed the feasibility of this wrist-

MASIMO 2039
Apple v. Masimo
IPR2024-00243

band oximeter.'); APPLE-1055, 5 ("wireless integrated pulse oximeter implanted in a … wrist band is possible to achieve with many benefits and practical applications "). A POSITA would have known of these references, yet Duckworth conceded that he was not aware of them when he offered his opinions in his declarations cited in the POR. APPLE-1059, 49:17-50:7, 59:17-60:2, 65:3-66:5, 70:18-77:20; APPLE-1042, ¶¶27-34.

Masimo's arguments about the alleged shortcomings of the prior art stand directly at odds with the limited disclosure of determining oxygen saturation at the wrist in the '745 Patent itself. APPLE-1042, ¶¶35-37. The '745 Patent only mentions the wrist as a possible tissue measurement site in passing, with no acknowledgment of the alleged challenges of measuring at the wrist and no solutions specifically tailored to addressing such challenges. *See* APPLE-1001, 2:58-59; 10:40-51; 12:18-20. For example, Duckworth conceded that the forehead would provide a much stronger signal for measuring oxygen saturation than the wrist (APPLE-1059, 37:6-8), and yet the '745 Patent discloses no reflectance sensor adaptations that would be made to successfully determine oxygen saturation from a weaker signal at the wrist. APPLE-1042, ¶¶35-37. The '745 Patent instead assumes that a POSITA would have known how to implement such measurements at the wrist despite the weaker signal. *Id.* Duckworth agreed. APPLE-1059, 17:19-22, 29:2-31:17, 48:17-22. Again, if the '745 Patent is enabled as Duckworth

MASIMO 2039
Apple v. Masimo
IPR2024-00243

contends, a POSITA would have reasonably expected success implementing these same features that were earlier described in the prior art.

Duckworth was likewise unable to identify any specific feature or combination of features recited in the claims that allows for pulse oximetry at the wrist. APPLE-1059, 33:12-19, 37:9-38:7[7], 39:9-45:22, 47:10-16, 49:1-15, 58:6-59:2, 83:20-84:4. Indeed, the differences between claims 1/20 and 15 show that a shape-changing material (elements [1.2]/[20.2]), a dark-colored coating (elements [1.4]/[20.4]), or a specific spatial configuration of the photodiodes (element [15.4]) is not required for measuring oxygen saturation at the wrist because none of these features appear in every independent claim. APPLE-1042, ¶38. And while the POR implies that Apple's POSITA definition relies on a level of skill that is too low, Masimo previously stipulated to the same definition in the ITC that Apple proposed in the Petition (*compare* APPLE-1033, 179 *with* Pet., 5-6), indicating that this level of skill is sufficient to enable the '745 Patent. To the extent a POSITA would have understood the disclosure of the '745 Patent as enabling oxygen saturation determinations at the wrist, a POSITA would also have understood the same level of skill as sufficient to enable corresponding prior art techniques for

[7] Duckworth identified FIG. 7A's "light concentrator 708," which does not correspond to any claimed feature.

MASIMO 2039
Apple v. Masimo
IPR2024-00243

determining oxygen saturation at the wrist when the techniques are disclosed with at least the same level of detail as the '745 Patent itself.[8] *See In re Epstein*, 32 F.3d 1559, 1568 (Fed. Cir. 1994); *Uber Techs., Inc. v. X One, Inc.*, 957 F.3d 1334, 1339 (Fed. Cir. 2020) ("specification … is entirely silent … suggesting that a [POSITA] was more than capable"); *In re Publicover*, 813 F. App'x 527, 532 (Fed. Cir. 2020) (rejecting argument that a POSITA would not know how to modify the prior art since the patent's "specification is just as sparse"); APPLE-1042, ¶38.

Masimo attempts to divert attention from the '745 specification's own sparse treatment of wrist-based measurements by citing to evidence of challenges that Apple successfully overcame to develop pulse oximetry for the Apple Watch in a strained attempt to undermine obviousness of the instituted grounds. For example,

---

[8] Even if the specification of the '745 patent is not enabled or Masimo argues that Iwamiya and Sarantos are not self-enabling with respect to determining oxygen saturation at the wrist, the wealth of evidence in the record of this proceeding as to how such determinations can be performed at the wrist is more than sufficient to support findings that a POSITA would have reasonably expected success and would have found claims 9 and 18 obvious based on the instituted grounds. *Raytheon Techs. Corp. v. General Electric Co.*, 993 F.3d 1374, 1376-1377, 1380-1381 (Fed. Cir. 2021).

MASIMO 2039
Apple v. Masimo
IPR2024-00243

Masimo cites testimony from Apple engineers in the ITC proceeding involving the '745 Patent (and others) in an effort to support its reasonable expectation of success narrative. POR, 30-31. But the engineers' testimony regarding their subjective experiences developing pulse oximetry for the Apple Watch does not bear on whether a **POSITA** would have reasonably expected success in performing the **claimed** function of "determining" an oxygen saturation parameter at the wrist. APPLE-1042, ¶39. As noted above, a POSITA is attributed knowledge of all the prior art. The engineers did not testify at the ITC from the perspective of a POSITA, and indeed, there is no evidence that the engineers were even aware (as a POSITA would have been) of the trove of prior art references and studies that had established the feasibility of determining oxygen saturation at the wrist before the '745 Patent. *See In re Sneed*, 710 F.2d 1544, 1550 (Fed. Cir. 2012) ("did not have knowledge of the [prior art] apparatus and, thus, lacked the guidance that reference provides").

The POR and Duckworth's declaration also fail to place the Apple engineers' testimony in its proper context, instead cherry-picking soundbites in support of Masimo's misleading narrative. APPLE-1042, ¶40. Duckworth appears not to have even understood much of the engineers' testimony. APPLE-1059, 60:4-63:19. But when the engineers' testimony and related evidence is considered in its entirety, it is clear that [redacted]

[redacted] APPLE-1042, ¶¶40-50. [redacted] *Id.* To the contrary, the claims merely refer to "determin[ing]" some unspecified oxygen saturation parameter at the wrist, which could be satisfied by far more rudimentary functions than that implemented on the Watch. APPLE-1042, ¶41.

In this context, Masimo's reliance on evidence of Apple's own successes developing pulse oximetry for the Apple Watch is not probative of a lack of

reasonable expectation of success in the instituted grounds. The evidence of challenges overcome in development of the Apple Watch involved design constraints that are not required by the claims, and therefore are not legally relevant to assessing reasonable expectation of success in achieving the oxygen saturation feature claimed without those design constraints. *Intelligent Bio-Systems, Inc. v. Illumina Cambridge, Ltd.*, 821 F.3d 1359, 1367 (Fed. Cir. 2016) ("'[F]ailure to consider the appropriate scope of the ... patent's **claimed invention** in evaluating [] reasonable expectation of success ... constitutes a legal error that [is] review[ed] without deference.'") (quoting *Allergan, Inc. v. Apotex Inc.*, 754 F.3d 952, 962-63 (Fed. Cir. 2014) (reversing non-obviousness finding for failure to properly account for correct claim scope); *Sound View Innovations, LLC v. Hulu, LLC*, 818 F. App'x 1009, 1013 (Fed. Cir. 2020) ("Since the claims here did not require a certain level of practicality, the Board did not err in finding a 'reasonable expectation of success . . . [in] meet[ing] the limitations of the claimed invention.'"); *Huawei Techs. Co. v. Iancu*, 813 F. App'x 505, 511 (Fed. Cir. 2020); *Dr. Falk Pharma GmbH v. GeneriCo, LLC*, 774 F. App'x 665, 675-76 (Fed. Cir. 2019).

[redacted] As Anthony

MASIMO 2039
Apple v. Masimo
IPR2024-00243

describes in detail, [redacted] APPLE-1042, ¶¶40-50; EX2079, 832:23-833:10; EX1037, 878:4-16; EX2076, 958:19-24, 963:19-964:1, 964:7-11, 965:15-22, 970:15-972:5; EX1036, 902:13-19; EX2078, 925:6-12, 949:10-16; EX2081, 167:18-169:10, 173:13-174:8; EX2082, 108:15-109:20; EX2080, 136:19-137:1, 160:21-161:2; EX2077, 999:7-11, 1000:6-1001:1, 1006:6-21; EX2077, 1015:13-1016:1; EX2085, 4-5; EX2083, 7, 23.

D. Apple demonstrated that Iwamiya-Sarantos-Venkatraman render obvious claim 20 and 27, and all their elements

Elements [20.0]-[20.8] in claim 20 are substantially identical to elements [1.0]-[1.7] in claim 1. APPLE-1042, ¶15APPLE-1059, 18:14-22:7. The Petition nonetheless contains a typographical error in cross-citing elements of claim 15 rather than claim 1 in addressing [20.0]-[20.8]. Pet., 27. Apple submits that this citation amounts to no more than harmless error, and respectfully requests that the Board treat elements [20.0]-[20.8] in Ground 1B as rendered obvious for the same reasons as elements [1.0]-[1.7] in Ground 1A. *See, e.g.,* IPR2023-00018, Paper 12, 18 FN7 (PTAB May 17, 2023); IPR2022-01345, Paper 13, 18 FN9 (PTAB March 9, 2023); IPR2019-01536, Paper 19, 2 FN1 (PTAB Aug. 27, 2020).

MASIMO 2039
Apple v. Masimo
IPR2024-00243

II. SARANTOS-SHIE RENDERS OBVIOUS CLAIMS 1, 9, 15, AND 18 (GROUND 2A) AND SARANTOS-SHIE-VENKATRAMAN RENDERS OBVIOUS CLAIMS 15, 18, 20, AND 27 (GROUND 2B)

A. Sarantos-Shie renders obvious a "first shape" and a different "second shape" (elements [1.1]-[1.2] and [20.1]-[20.2])

1. Shie discloses changing a first shape of light into a second shape

Masimo argues that "Shie does not disclose changing a first shape of light into a second shape," citing Duckworth's declaration for support. POR, 55 (citing EX2070, ¶74). But Duckworth repeatedly answered "I don't know" when asked what the terms "shape" and "shaping" refer to in Shie. APPLE-1059, 106:22-111:8. Duckworth's declaration thus sheds no meaningful light on this issue, despite clear disclosure in Shie of optical elements that change a first shape of light into a second shape.[9] APPLE-1042, ¶¶53-56; Pet., 30, 32 (citing APPLE-1007, Abstract, 6:44-7:7).

For example, Shie describes "micro-structures" in a substrate "created in such a manner so as to control the direction of light output from a light source so as

[9] Contrary to assertions in the POR (pp. 11-16), Apple has never contended in this proceeding that a change in size alone is sufficient to meet the claimed shaping limitations. Sarantos-Shie plainly renders obvious these limitations even when the second shape must be different from the first shape apart from any change in size.

MASIMO 2039
Apple v. Masimo
IPR2024-00243

to **shape the light output** into a desired distribution pattern or envelope" and "applied to objects in order to provide the light homogenizing, **shaping** and directing characteristics." APPLE-1007, 5:29-45, 7:8-27 ("shape the light"), 9:36-45 ("shape, and direct light"). Indeed, Shie discloses both cylindrical and Fresnel-type lenses, referenced by cited disclosure in the Petition, that would have been obvious to transform light from a first shape to a second shape (e.g., between circular and elliptical shapes or between square and circular shapes). APPLE-1007, 1:20-24, 6:3-28; APPLE-1072, 4:60-5:14, FIG. 4; APPLE-1076, Figure 1; APPLE-1075, [0069]; APPLE-1073, [0004], [0020]-[0021], [0031]-[0032], [0035]; APPLE-1074, [0050], [0061]-[0064]; APPLE-1077, 391, 395; APPLE-1042, ¶¶55-59.

2. A POSITA would have been motivated to combine Sarantos and Shie and would have reasonably expected success

The proposed Sarantos-Shie relies on Shie's general teaching of an optical element that shapes the light output, not any of Shie's particular optical elements. Pet., 32. A POSITA would have known that various "optical elements" such as lenses "are used routinely to manipulate light in optical instrumentation" and "for directing the light from the light source." APPLE-1046, 10; APPLE-1042, ¶60.

The Petition identified multiple reasons that would have motivated a POSITA to use a light shape changing material in the Sarantos-Shie combination.

MASIMO 2039
Apple v. Masimo
IPR2024-00243

Pet., 32; APPLE-1003, ¶76. Masimo's attempts to refute these straightforward motivations are based on Masimo's incomplete understanding of the prior art, as Anthony explains. APPLE-1042, ¶¶60-64. And even if certain design tradeoffs were required to implement Shie-like light-shape changing features in the combination, such tradeoffs do not detract from the obviousness of the combination. *Id.*; *Allied*, 825 F.3d at 1381.

B. Sarantos-Shie (with or without Venkatraman) renders obvious a "light block having a circular shape" (element [15.3])

The Petition properly demonstrated that the Sarantos-Shie combination renders obvious a "light block having a circular shape" as recited in [15.3]. Pet., 36-37. Masimo's assumption that the Petition improperly combines elements different embodiments in FIGS. 22 and 25 is incorrect. APPLE-1042, ¶65. To start, Sarantos's description of FIGS. 22-25 is cohesive. *Id.* Sarantos in fact treats FIG. 25 as a natural extension of the device that would incorporate the relevant features of FIG. 22. *Id.*; APPLE-1005, 16:60-62, 19:31-35. Thus, no combination was required to show unpatentability. *Id.* And even if FIGS. 22 and 25 include some differences, they would still render the recited claim features obvious since it is well-established that "[c]ombining two embodiments disclosed adjacent to each other in a prior art patent does not require a leap of inventiveness." *Boston Scientific Scimed, Inc. v. Cordis Corp.*, 554 F.3d 982, 991 (Fed. Cir. 2009);

MASIMO 2039
Apple v. Masimo
IPR2024-00243

APPLE-1042, ¶66; APPLE-1005, 17:1-3, 17:26-42, 19:33-35. The choice of a circular shape for the light block in the Sarantos-Shie combination also would have been obvious to a POSITA considering that Sarantos's device already includes an annular configuration of detectors around a circular LED. APPLE-1042, ¶¶67-71; APPLE-1059, 102:19-103:22; APPLE-1056, 29; APPLE-1069, 8; *In re Kuhle*, 526 F.2d 553, 555 (CCPA 1975) (finding a generic feature that "provides no novel or unexpected result" as "an obvious matter of design choice"); *Apple Inc. v. Masimo Corp.*, IPR2021-00193, Paper 30, 76-80 (PTAB June 2022).

C. Sarantos-Shie (with or without Venkatraman) renders obvious "the plurality of photodiodes are arranged in an array having a spatial configuration corresponding to a shape of the portion of the tissue measurement site encircled by the light block" (element [15.4])

As discussed above, Sarantos discloses and renders obvious multiple photodetectors in the FIG. 25 configuration. APPLE-1005, 20:52-57; APPLE-1042, ¶72. In this context, it would have been obvious that implementing the annularly shaped photodetector element 2512 of FIG. 25 with multiple photodetectors as disclosed at col. 20:52-57 would involve arranging the photodetectors in the same annular configuration as element 2512—i.e., "in an array having a spatial configuration corresponding to a shape of the portion of the tissue measurement site encircled by the light block" (depicted by a blue ring). *Id*.

MASIMO 2039
Apple v. Masimo
IPR2024-00243

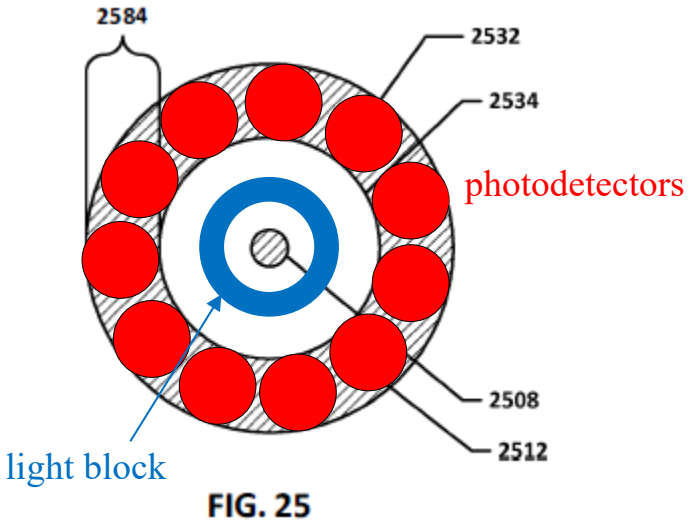

APPLE-1005, FIG. 25 (modified)

D. Sarantos-Shie (with or without Venkatraman) renders obvious measuring oxygen saturation at the wrist (claims 9 and 18)

As explained in Section I.C.1, Sarantos discloses measuring oxygen saturation at the wrist. Pet., 36; APPLE-1005, 13:40-53. This is sufficient to render the additional features of claim 9 and 18 obvious in Grounds 2A and 2B since these features are already present in the primary reference. Further as described in in Section I.C.4, Masimo misrepresents and mischaracterizes much of the record evidence on this issue, and Masimo's arguments against the obviousness of these features are baseless. APPLE-1042, ¶73.

III. CONCLUSION

All Challenged Claims are unpatentable.

MASIMO 2039
Apple v. Masimo
IPR2024-00243

Respectfully submitted,

Dated: August 21, 2023

/Nicholas W. Stephens/

W. Karl Renner, Reg. No. 41,265
Nicholas Stephens, Reg. No. 74,320
Andrew B. Patrick, Reg. No. 63,471
Kim Leung, Reg. No. 64,399
Patrick J. Bisenius, Reg. No. 63,893
Patrick J. King, Reg. No. 60,816
Fish & Richardson P.C.
60 South Sixth Street
Minneapolis, MN 55402
T: 202-783-5070

MASIMO 2039
Apple v. Masimo
IPR2024-00243

CERTIFICATION UNDER 37 CFR § 42.24(d)

Under the provisions of 37 CFR § 42.24(d), the undersigned hereby certifies that the word count for the foregoing Petitioner's Reply to Patent Owner's Response totals 5,599, which is less than the 5,600 allowed under 37 CFR § 42.24.

Respectfully submitted,

Date: August 21, 2023

/Nicholas W. Stephens/

W. Karl Renner, Reg. No. 41,265
Nicholas Stephens, Reg. No. 74,320
Andrew B. Patrick, Reg. No. 63,471
Kim Leung, Reg. No. 64,399
Patrick J. Bisenius, Reg. No. 63,893
Patrick J. King, Reg. No. 60,816
Fish & Richardson P.C.
60 South Sixth Street
Minneapolis, MN 55402
T: 202-783-5070
F: 877-769-7945

Attorneys for Petitioner

MASIMO 2039
Apple v. Masimo
IPR2024-00243

CERTIFICATE OF SERVICE

Pursuant to 37 CFR §§ 42.6(e)(1) and 42.6(e)(4)(iii), the undersigned certifies that on August 21, 2023, a complete and entire copy of this Petitioner's Reply to Patent Owner's Response and exhibits were provided via email to the Patent Owner by serving the email correspondence addresses of record as follows:

Brian C. Claassen (Reg. No. 63,051)
Carol Pitzel Cruz (Reg. No. 61,224)
Daniel C. Kiang (Reg. No. 79,631)
Jeremiah S. Helm (*Pro Hac Vice*)

KNOBBE, MARTENS, OLSON & BEAR, LLP
2040 Main Street, Fourteenth Floor
Irvine, CA 92614
Tel.: (949) 760-0404
Fax: (949) 760-9502

E-mail: AppleIPR745-1@knobbe.com

/Crena Pacheco/
Crena Pacheco
Fish & Richardson P.C.
60 South Sixth Street
Minneapolis, MN 55402
pacheco@fr.com