IN THE UNITED STATES PATENT AND TRADEMARK OFFICE

In re Patent of:	Al-Ali	
U.S. Patent No.:	10,470,695	Attorney Docket No.: 50095-0004IP1
Issue Date:	November 12, 2019	
Appl. Serial No.:	16/226,249	
Filing Date:	December 19, 2018	
Title:	ADVANCED PULSE OXIMETRY SENSOR	

Mail Stop Patent Board
Patent Trial and Appeal Board
U.S. Patent and Trademark Office
P.O. Box 1450
Alexandria, VA 22313-1450

PETITION FOR *INTER PARTES* REVIEW OF UNITED STATES PATENT NO. 10,470,695 PURSUANT TO 35 U.S.C. §§ 311–319, 37 C.F.R. § 42

MASIMO 2105
Apple v. Masimo
IPR2024-00243

TABLE OF CONTENTS

I. REQUIREMENTS FOR IPR 2
A. Grounds for Standing 2
B. Challenge and Relief Requested 2
II. THE '695 PATENT 4
A. Brief Description 4
B. Level of Ordinary Skill in the Art 4
C. Claim Construction 5
III. THE CHALLENGED CLAIMS ARE UNPATENTABLE 6
A. GROUND 1A: Claims 1, 4, 5, 8, 9, 13, 15-19, and 24-30 are obvious based on Sarantos 6
1. Overview of Sarantos 6
2. Analysis 7
B. GROUND 1B: Claims 1, 2, 4, 5, 8, 9, 11, 13, 15-19, 22, and 24-30 are obvious based on Sarantos in view of Mendelson-1991 35
1. Overview of Mendelson-1991 35
2. The combination of Sarantos and Mendelson-1991 36
3. Analysis 38
C. GROUND 1C: Claims 3, 12, and 23 are obvious based on Sarantos in view of Mendelson-1991 and Venkatraman 55
1. Overview of Venkatraman 55
2. The combination of Sarantos, Mendelson-1991, and Venkatraman 57
3. Analysis 58
D. GROUND 1D: Claims 6, 14, and 21 are obvious based on Sarantos in view of Mendelson-1991 and Chin 60
1. Overview of Chin 60
2. The combination of Sarantos, Mendelson-1991, and Chin 61
3. Analysis 63
E. GROUND 2A: Claims 1, 4, 5, 8, 9, 13, 15-17, 19, 24-26, 28, and 29 are obvious based on Ackermans 64

1. Overview of Ackermans 64
2. Analysis 66
F. GROUND 2B: Claims 2, 3, 11, 12, 18, 22, 23, 27, and 30 are obvious based on Ackermans in view of Venkatraman 93
1. The combination of Ackermans and Venkatraman 93
2. Analysis 95
G. GROUND 2C: Claims 6, 14, and 21 are obvious based on Ackermans in view of Chin 102
1. The combination of Ackermans and Chin 102
2. Analysis 104
IV. PAYMENT OF FEES 106
V. CONCLUSION 107
VI. MANDATORY NOTICES UNDER 37 C.F.R § 42.8(a)(1) 107
A. Real Party-In-Interest Under 37 C.F.R. § 42.8(b)(1) 107
B. Related Matters Under 37 C.F.R. § 42.8(b)(2) 107
C. Lead And Back-Up Counsel Under 37 C.F.R. § 42.8(b)(3) 107
D. Service Information 107

EXHIBITS

APPLE-1001	U.S. Patent No. 10,470,695 to Al-Ali ("the '695 Patent")
APPLE-1002	Excerpts from the Prosecution History of the '695 Patent
APPLE-1003	Declaration of Brian W. Anthony, Ph.D.
APPLE-1004	Reserved
APPLE-1005	U.S. Patent No. 8,998,815 to Venkatraman et al. ("Venkatraman")
APPLE-1006	U.S. Patent No. 6,343,223 to Chin et al. ("Chin")
APPLE-1007 to APPLE-1013	Reserved
APPLE-1014	U.S. Patent No. 9,392,946 to Sarantos et al. ("Sarantos")
APPLE-1015	Mendelson et al., *Skin Reflectance Pulse Oximetry: In Vivo Measurements from the Forearm and Calf*, Journal of Clinical Monitoring Vol. 7 No. 1, pp. 7-12 (January 1991) ("Mendelson-1991")
APPLE-1016	PCT Pub. No. WO 2011/051888 to Ackermans et al. ("Ackermans")
APPLE-1017	Declaration of Jacob Munford
APPLE-1018	U.S. Patent No. 4,295,472 to Adams ("Adams")
APPLE-1019	U.S. Patent No. 7,415,298 to Casciani et al. ("Casciani")

Limitation	Claim Language
Claim 1	
[1pre]	A wrist-worn physiological monitoring device configured for placement on a user at a tissue measurement site, the device comprising:
[1a]	a light emission source comprising a plurality of emitters configured to irradiate the tissue measurement site by emitting light towards the tissue measurement site,
[1b]	the plurality of emitters configured to emit one or more wavelengths
[1c]	a plurality of detectors configured to detect the light emitted by the plurality of emitters after attenuation by a circular portion of the tissue measurement site
[1d]	the plurality of detectors further configured to output at least one signal responsive to the detected light
[1e]	a processor configured to receive the at least one signal responsive to the output and determine a physiological parameter of the user; and
[1f]	a light block forming an enclosing wall between the light emission source and the plurality of detectors,
[1g]	the light block defining the circular portion of the tissue measurement site, the light emission source arranged proximate a first side of the enclosing wall and the plurality of detectors arranged proximate a second side of the enclosing wall, the first side being different than the second side, wherein the enclosing wall prevents at least a portion of light emitted from the light emission source from being detected by the plurality of detectors without attenuation by the tissue,
[1h]	and wherein the plurality of detectors are arranged in an array having a spatial configuration corresponding to the circular portion of the tissue measurement site.
Claim 2	
[2]	The physiological monitoring device of claim 1, further comprising a display configured to present information related to the determined physiological parameter to the user.

Limitation	Claim Language
Claim 3	
[3]	The physiological monitoring device of claim 2, wherein the display is a touch-screen display.
Claim 4	
[4]	The physiological monitoring device of claim 1, wherein the enclosing wall of the light block is a circular wall.
Claim 5	
[5]	The physiological monitoring device of claim 1, wherein, when the physiological monitoring device is worn by the user at the tissue measurement site, the plurality of emitters are arranged in a reflectance measurement configuration on a first side of the tissue measurement site, and wherein the plurality of detectors are arranged in a reflectance measurement configuration on the first side of the tissue measurement site when the physiological monitoring device is worn by the user.
Claim 6	
[6]	The physiological monitoring device of claim 1, further comprising a diffuser which receives, spreads, and emits the spread light, wherein the emitted spread light is directed at the tissue measurement site.
Claim 8	
[8]	The physiological monitoring device of claim 1, wherein the physiological parameter is selected from the group consisting of arterial oxygen saturation, glucose, and pulse rate.
Claim 9	
[9pre]	A method of measuring a physiological parameter in a user's blood, the method comprising:
[9a]	irradiating a tissue measurement site by emitting, from a plurality of emitters of a light emission source of a physiological monitoring device, light of one or more wavelengths toward the tissue measurement site, the tissue measurement site located on a wrist of the user;

Limitation	Claim Language
[9b]	detecting, with a plurality of detectors, the light emitted by the plurality of emitters of the light emission source after attenuation through a circular portion of the tissue measurement site; and
[9c]	providing a cylindrical light block forming an enclosing wall between the light emission source and the plurality of detectors,
[9d]	the light emission source arranged proximate a first side of the enclosing wall and the plurality of detectors arranged proximate a second side of the enclosing wall, the first side being different than the second side,
[9e]	wherein the enclosing wall prevents at least a portion of light emitted from the light emission source from being detected by the plurality of detectors without attenuation by the tissue measurement site,
[9f]	and wherein the plurality of detectors are arranged in an array having a circular spatial configuration, the circular spatial configuration arranged to receive said attenuated light;
[9g]	outputting, from the plurality of detectors, at least one signal responsive to the detected light;
[9h]	receiving, by a processor, the outputted at least one signal responsive to the detected light;
[9i]	and processing, by the processor, the received at least one signal responsive to the detected light to determine a physiological parameter.
Claim 11	
[11]	The method of claim 9, further comprising presenting, with a display of the physiological monitoring device, information related to the determined physiological parameter to the user.
Claim 12	
[12]	The method of claim 11, wherein the display is a touch-screen display.
Claim 13	

Limitation	Claim Language
[13a]	The method of claim 9, wherein when the physiological monitoring device is worn by the user at the tissue measurement site, the plurality of emitters are arranged in a reflectance measurement configuration on a first side of the tissue measurement site,
[13b]	and wherein the plurality of detectors are arranged in a reflectance measurement configuration on the first side of the tissue measurement site when the physiological monitoring device is worn by the user.
Claim 14	
[14]	The method of claim 9, further comprising spreading, with a diffuser, the emitted light and emitting the spread light from the diffuser to the tissue measurement site.
Claim 15	
[15]	The method of claim 9, wherein the physiological parameter is indicative of at least one of pulse rate, perfusion index, oxygen content, and total hemoglobin.
Claim 16	
[16]	The method of claim 9, wherein the plurality of emitters comprise one or more light emitting diodes (LEDs), and wherein the one or more wavelengths comprises at least an infrared wavelength.
Claim 17	
[17]	The method of claim 9, wherein the plurality of detectors comprise a plurality of photodiodes.
Claim 18	
[18]	The method of claim 9, further comprising, directing, with a light concentrator, the light emitted by the light emission source after attenuation through tissue of the user at the tissue measurement site to the plurality of detectors.
Claim 19	
[19pre]	A wrist-worn physiological monitoring sensor comprising:

Limitation	Claim Language
[19a]	a light emission source comprising a plurality of optical sources configured to irradiate a tissue measurement site by emitting light towards the tissue measurement site on a user,
[19b]	the tissue measurement site located on a wrist of the user,
[19c]	the plurality of optical sources configured to emit one or more wavelengths;
[19d]	a plurality of detectors configured to detect the light emitted by the plurality of emitters after attenuation by a circular portion of the tissue measurement site,
[19e]	the plurality of detectors further configured to output at least one signal responsive to the detected light;
[19f]	a processor configured to receive the outputted at least one signal responsive to the detected light and determine a physiological parameter indicative of a state or trend of wellness of the user; and
[19g]	a light block forming an enclosing wall between the light emission source and the plurality of detectors,
[19h]	the light emission source arranged proximate a first side of the enclosing wall and the plurality of detectors arranged proximate a second side of the enclosing wall, the first side being different than the second side,
[19i]	the light block forming a light isolation chamber defined by the enclosing wall,
[19j]	wherein the enclosing wall prevents at least a portion of light emitted from the light emission source from being detected by the plurality of detectors without attenuation by the tissue,
[19k]	and wherein the plurality of detectors are arranged in an array having a circular spatial configuration, the circular spatial configuration arranged to receive said attenuated light.
Claim 21	
[21]	The physiological monitoring sensor of claim 19, further comprising a diffuser which receives, spreads, and emits the spread light, wherein the emitted spread light is directed at the tissue measurement site.

Limitation	Claim Language
Claim 22	
[22]	The physiological monitoring sensor of claim 19, further comprising a display configured to present information related to the determined physiological parameter to the user.
Claim 23	
[23]	The physiological monitoring sensor of claim 22, wherein the display is a touch-screen display.
Claim 24	
[24a]	The physiological monitoring sensor of claim 19, physiological monitoring sensor is worn by the user at the tissue measurement site, the plurality of optical sources are arranged in a reflectance measurement configuration on a first side of the tissue measurement site,
[24b]	and wherein the plurality of detectors are arranged in a reflectance measurement configuration on the first side of the tissue measurement site when the physiological monitoring sensor is worn by the user.
Claim 25	
[25a]	The physiological monitoring device of claim 1, wherein the plurality of emitters comprise one or more light emitting diodes (LEDs),
[25b]	and wherein the one or more wavelengths comprises at least an infrared wavelength.
Claim 26	
[26]	The physiological monitoring device of claim 1, wherein the plurality of detectors comprise a plurality of photodiodes.
Claim 27	
[27]	The physiological monitoring device of claim 1, further comprising a light concentrator configured to direct the attenuated, reflected light to the plurality of detectors.
Claim 28	

Limitation	Claim Language
[28a]	The physiological monitoring sensor of claim 19, wherein the plurality of optical sources comprise one or more light emitting diodes (LEDs),
[28b]	and wherein the one or more wavelengths comprises at least an infrared wavelength.
Claim 29	
[29]	The physiological monitoring sensor of claim 19, wherein the plurality of detectors comprise a plurality of photodiodes.
Claim 30	
[30]	The physiological monitoring sensor of claim 19, further comprising a light concentrator configured to direct the attenuated, reflected light to the plurality of detectors.

Apple Inc. ("Petitioner" or "Apple") petitions for *Inter Partes* Review ("IPR") under 35 U.S.C. §§311–319 and 37 C.F.R. §42 of claims 1-6, 8, 9, 11-19, and 21-30 ("the Challenged Claims") of U.S. Patent No. 10,470,695 ("the '695 Patent"). The '695 Patent describes a purported improvement to a "pulse oximetry sensor" to "limit[] the effect of multiple scattering of photons" by the patient's tissue on measurement accuracy. APPLE-1001, 2:24-32. According to the '695 Patent, the addition of a circular light blocker improves the sensor's measurement accuracy by "ensur[ing] that the only light detected by" the pulse oximetry sensor is light that has been emitted by the sensor and is "reflected" from the patient's tissue. *Id*., 11:17-20.

But this "improvement" was not new. To the contrary, the '695 Patent was granted without full consideration to the wide body of applicable art. As Dr. Brian Anthony explains in his accompanying declaration with respect to the applied prior art, pulse oximeters commonly included these and other features by the '695 Patent's earliest effective filing date, and a wrist-worn physiological monitoring device including each feature of the Challenged Claims would have been obvious to a POSITA as of that date based on the prior art references described herein. APPLE-1003, [17-172]. Sarantos (APPLE-1014), Ackermans (APPLE-1016), Mendelson-1991 (APPLE-1015) and other references cited herein likewise disclose this circular light block and detector configuration, as discussed in detail

below. Accordingly, Apple respectfully submits that an IPR should be instituted, and that the Challenged Claims should be canceled as unpatentable.

I. REQUIREMENTS FOR IPR

A. Grounds for Standing

Apple certifies that the '695 Patent is available for IPR. The present Petition is being filed within one year of service of a complaint against Apple in *Masimo Corporation et al. v. Apple Inc*., Case No. 8:20-cv-00048 (C.D. Cal.).[1] Apple is not barred or estopped from requesting this review challenging the Challenged Claims on the below-identified grounds.

B. Challenge and Relief Requested

Apple requests an IPR of the Challenged Claims on the grounds set forth in the table below. An explanation of how these claims are unpatentable under the statutory grounds identified below is provided in the form of a detailed description that follow. Additional explanation and support for each ground of rejection is set forth in the Declaration of Brian W. Anthony, Ph.D. (APPLE-1003), referenced throughout this Petition.

Ground	Claims	§103 Basis
1A	**1, 4, 5, 8, 9, 13, 15-19, 24-30**	Sarantos

[1] The '695 Patent is no longer asserted in the district court case.

Ground	Claims	§103 Basis
1B	**1, 2, 4, 5, 8, 9, 11, 13, 15-19, 22, 24-30**	Sarantos in view of Mendelson-1991
1C	**3, 12, 23**	Sarantos in view of Mendelson-1991 and Venkatraman
1D	**6, 14, 21**	Sarantos in view of Mendelson-1991 and Chin
2A	**1, 4, 5, 8, 9, 13, 15-17, 19, 24-26, 28, 29**	Ackermans
2B	**2, 3, 11, 12, 18, 22, 23, 27, 30**	Ackermans in view of Venkatraman
2C	**6, 14, 21**	Ackermans in view of Chin

Each reference pre-dates the provisional application (filed July 2, 2015) and qualifies as prior art:

Reference	Filed	Issued	Prior art under
Sarantos (APPLE-1014)	May 28, 2015	July 19, 2016	102(a2)
Mendelson-1991 (APPLE-1015)	January 1991 (Published)[2]		102(a1)

[2] Mendelson-1991 was publically available by at least January 1991. *See* APPLE-1017, [1]-[12] (Declaration of Jacob Munford). Exhibit APPLE-1015 is a

Reference	Filed	Issued	Prior art under
Ackermans (APPLE-1016)	Oct. 27, 2010	May 5, 2011 (Published)	102(a1),(a2)
Venkatraman (APPLE-1005)	June 3, 2014	April 7, 2015	102(a1),(a2)
Chin (APPLE-1006)	June 14, 2000	Jan. 29, 2002	102(a1),(a2)

None of these references were cited in any office action by the examiner during prosecution.

II. THE '695 PATENT

A. Brief Description

The '695 patent, entitled "Advanced Pulse Oximetry Sensor," issued from an application filed on December 19, 2018, and claims priority to an earlier application filed on June 28, 2016 and a provisional application filed July 2, 2015 (hereinafter the "Critical Date"). *See* APPLE-1001, Face.

B. Level of Ordinary Skill in the Art

A person of ordinary skill in the art relating to, and at the time of, the invention of the '695 Patent ("POSITA") would have been a person with a working

---

true and correct copy of the Mendelson-1991 journal article as it appeared in the Journal of Clinical Monitoring in January 1991. *See id*.

knowledge of physiological monitoring technologies. The person would have had a Bachelor of Science degree in an academic discipline emphasizing the design of electrical, computer, or software technologies, in combination with training or at least one to two years of related work experience with capture and processing of data or information, including but not limited to physiological monitoring technologies. APPLE-1003, [17]-[19]. Alternatively, the person could have also had a Master of Science degree in a relevant academic discipline with less than a year of related work experience in the same discipline. *Id.*

C. Claim Construction

Petitioner submits that all claim terms should be construed according to the *Phillips* standard. *Phillips v. AWH Corp.*, 415 F.3d 1303 (Fed. Cir. 2005); 37 C.F.R. § 42.100. Here, based on the evidence below and the prior art's description of the claimed elements being similar to that of the '695 patent specification, no formal claim constructions, except those discussed below, are necessary in this proceeding because "claim terms need only be construed to the extent necessary to resolve the controversy." *Wellman, Inc. v. Eastman Chem. Co.*, 642 F.3d 1355, 1361 (Fed. Cir. 2011).

III. THE CHALLENGED CLAIMS ARE UNPATENTABLE

A. GROUND 1A: Claims 1, 4, 5, 8, 9, 13, 15-19, and 24-30 are obvious based on Sarantos

1. Overview of Sarantos[3]

Sarantos describes a "wristband-type wearable fitness monitor" that measures "physiological parameters" of the wearer, such as the person's "heart rate" and "blood oxygenation levels." APPLE-1014, 2:5-14, 5:55-59, 7:12-14, 13:39-47. The monitor performs these measurements using a photoplethysmographic (PPG) sensor, which includes one or more light sources (e.g., LEDs) and an array of photodetectors. *Id*., 1:9-10, 43-47, 7:12-16, 15:23-43. Sarantos describes that when the monitor "is worn by a person in a manner similar to a wristwatch, the back face" of the monitor "may be pressed against the person's skin, allowing the light sources" of the PPG sensor "to illuminate the person's skin." *Id*., 1:48-51, 7:12-23. The light "diffuses through the person's flesh and a portion of this light is then emitted back" (i.e., reflected) "out of the person's skin in close proximity to where the light was introduced into the flesh." *Id*., 7:24-28;

[3] General descriptions provided for the references and combinations are hereby incorporated into each subsection addressing/applying those references, as are the discussions of combinations.

APPLE-1003, [21]. The photodetector array of the PPG sensor measures the "intensity" of this reflected light, and provides signals representing the intensity to "control logic" of the monitoring device. APPLE-1014, 2:5-14, 7:12-23, 13:39-47. The control logic can then calculate different physiological parameters based on characteristics of the reflected light signal. *Id*., 1:54-56, 7:12-23. For example, the person's heart rate can be calculated based on "fluctuations in the amount of light from the light source that is emanated back out of the flesh" that correspond fluctuations in blood volume associated with each beat of the person's heart. *Id*., 7:23-60; APPLE-1003, [21]-[29].

As described in greater detail in the sections below, Sarantos renders claims 1, 4, 5, 8, 9, 13, 15-19, and 24-30 of the '695 patent obvious.

2. Analysis

(a) Claim 1

Limitation [1pre]

To the extent the preamble is limiting, Sarantos renders obvious [1pre]. For example, as described above in Section III.A.1, Sarantos describes a "***wristband-type wearable fitness monitor***"[4] that includes "a PPG sensor" comprising one or more light sources and an array of photodetector elements. *Id*., 1:43-47, 7:12-16,

[4] All emphasis added unless otherwise indicated.

15:23-43. Sarantos describes that the PPG sensor "operate[s] by shining light" from the light sources "into a person's skin" which "diffuses through the person's flesh and a portion of this light is then emitted back" (i.e., reflected) "out of the person's skin in close proximity to where the light was introduced into the flesh." *Id*., 7:24-28; APPLE-1003, [30]. The photodetector array measures the "intensity" of this reflected light, and, from these measurements, "control logic" in the monitoring device determines "***physiological parameters***" such as the person's "***heart rate***" and "***blood oxygenation levels***." APPLE-1014, 2:5-14, 7:12-14, 13:39-47. As explained in greater detail below, a POSITA would have understood the area of the person's skin upon which light from the PPG sensor shines and is reflected to be a tissue measurement site. APPLE-1003, [30]; *see e.g.,* APPLE-1014, 17:1-35, FIGS. 22-24.

Limitation [1a]

As previously discussed in [1pre] and Section III.A.1, Sarantos describes that the PPG sensor includes a "***light source 1808"*** comprising "***two light-emitting devices 1810***." APPLE-1014, 15:24-43, FIG. 18. FIG. 18 shows this configuration:

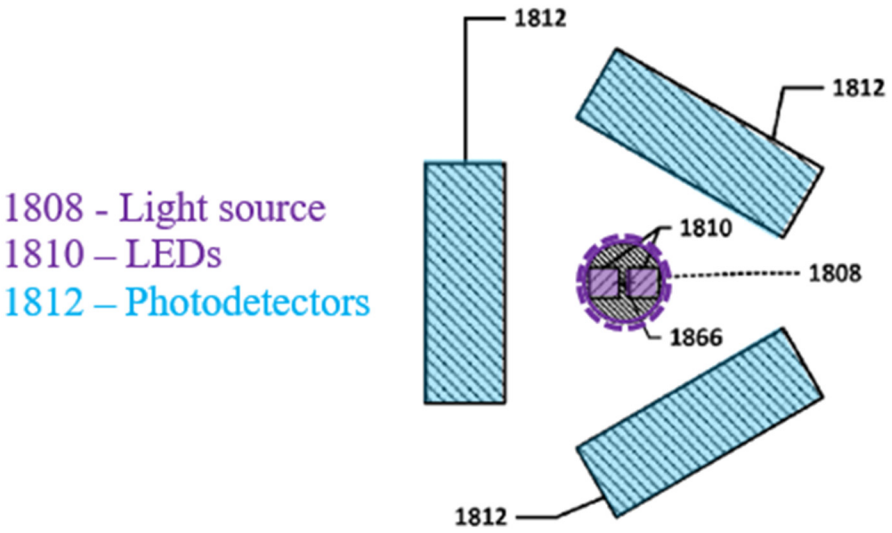

FIG. 18

APPLE-1014, FIG. 18.

With respect to FIG. 22, Sarantos describes a window region 2226 that includes a window 2278 that "***may be held against a person's skin***, e.g., by being held in place with a strap, when heart rate measurements are obtained ***to allow light from the light source 2208"*** which is produced by the two light-emitting devices 1810 ***"to shine through its associated window region 2226 and into the person's skin***." APPLE-1014, 17:1-35, 15:24-43. A POSITA would have understood that, in this configuration, the two light-emitting devices 1810 are configured to irradiate the portion of the person's skin adjacent to the window 2278 (the tissue measurement site). APPLE-1003, [31]-[32]; *see e.g.,* APPLE-1014, 17:1-35, 15:24-43, FIGS. 18, 22-24.

In addition, as previously discussed in [1pre], *supra*, Sarantos describes its monitoring device as a "***wristband-type*** wearable fitness monitor," and states that it performs its measurements based on reflected light from an area on a "***person's arm near the wrist***" (the tissue measurement site). APPLE-1014, 5:55-59, 8:39-58; APPLE-1003, [33].

Limitation [1b]

As previously discussed (*supra* [1a]), Sarantos describes that the light source comprises a plurality of light-emitting devices (emitters). APPLE-1014, FIG. 18, 15:24-43, 7:24-36, 1:10-25. Sarantos describes that the plurality of light-emitting devices can include "***separate light-emitting devices that are each able to emit different wavelengths of light***," where "each light emitting device may be used to supply light for a different type of photoplethysmographic measurement." *Id*., 13:50-53; APPLE-1003, [34]. For example, Sarantos states that "it may be desirable to utilize an LED that predominantly emits light in the green light spectrum for the purposes of detecting heart rate since the fluctuations in the light that is emitted back out of the person's skin may be more pronounced in the green light spectrum." *Id*., 13:39-44. When measuring "other physiological parameters besides heart rate, such as blood oxygenation levels," Sarantos describes that "it

may be desirable to utilize an LED that predominantly emits light in the red or infrared spectrum." *Id*., 13:45-49; *see also* 13:49-58; APPLE-1003, [34].

Limitation [1c]

As explained above with respect to [1pre], Sarantos describes using multiple photodetectors 1812 in a circular configuration to detect light reflected from the person's flesh. APPLE-1014, 8:13-29, 14:60-62, 15:24-27, 20:52-57 (configuration includes "a plurality of photodetector elements ***arranged about the light source***."); APPLE-1003, [35].

In more detail, Sarantos teaches that light emitted by the light source 1808 or emitters 1810 is radiated onto a person's skin, diffuses through the person's flesh, and emitted back out of the person's skin in close proximity to where the light was introduced into the flesh. APPLE-1014, 7:24-36, 1:7-24. As shown in FIGS. 15, 16, and 18, a plurality of photodetector elements 1512/1612/1812 may be used to detect the light after it is attenuated and reflected back from a person's body. APPLE-1014, 8:13-14 ("Light emanating from the person's skin is then measured by a photodetector element"), 14:60-65 (In FIGS. 15 and 16, the photodetector elements are "arranged ***in a circular array*** centered on" the light source), 15:39-42 ("array of photodetector elements 1812" in the same circular configuration as FIG. 15); APPLE-1003, [36].

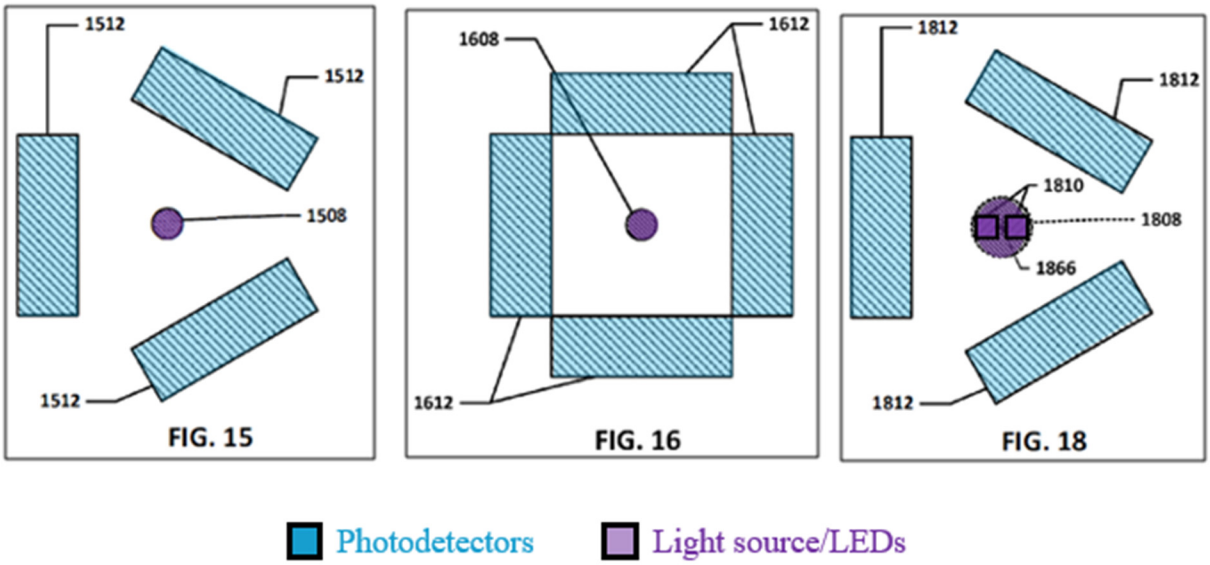

Sarantos at FIGS. 15 (left), 16 (center) and 18 (right).

Accordingly, Sarantos discloses or renders obvious "a plurality of detectors configured to detect the light emitted by the plurality of emitters after attenuation by ... the tissue measurement site."

Limitation [1c] also recites that the claimed attenuation is "by a circular portion of the tissue measurement site." To better understand this feature, we turn to the'695 Patent, which explains that it has a diffuser that can be used to define the shape of a surface area onto which light is distributed. APPLE-1001, 3:1-10 ("the diffuser is further configured to define a surface area shape by which the emitted spread light is distributed onto a surface of the tissue measurement site. The defined surface area shape can include … a shape that is substantially … circular, oval, or annular, among others").

While claim 1 does not recite a diffuser, [1g] does recite that "the light block defin[es] the circular portion of the tissue measurement site" and [1f] recites that the "light block form[s] an enclosing wall between the light emission source and the plurality of detectors." As is explained below, a POSITA would have understood or found it obvious that the light blocking walls of Sarantos' sensor define a "circular portion of the tissue measurement site." APPLE-1003, [39]-[40].

FIGS. 15 and 18 of Sarantos' show the photodetector elements (1512, 1812) are arranged in a circular array about a light source (1508, 1808). APPLE-1014, FIGS. 15, 18, 14:54-15:45. Furthermore, as shown below in FIGS. 22-24, a light blocking wall (2274, 2374, 2474) is formed between the light source (2208, 2308, 2408) emitting light and photodetector elements (2212, 2312, 2412). APPLE-1014, FIGS. 22-24, 17:1-18:35. The light blocking wall blocks light from the light source from being detected directly by the photodetector elements. *Id.*, 17:25-31 ("the light source 2208 may be separated from the HAR photodetector elements 2212 within the PPG sensor by walls 2274."); APPLE-1003, [39]. The light blocking walls are annotated in red in FIGS. 22-24 below:

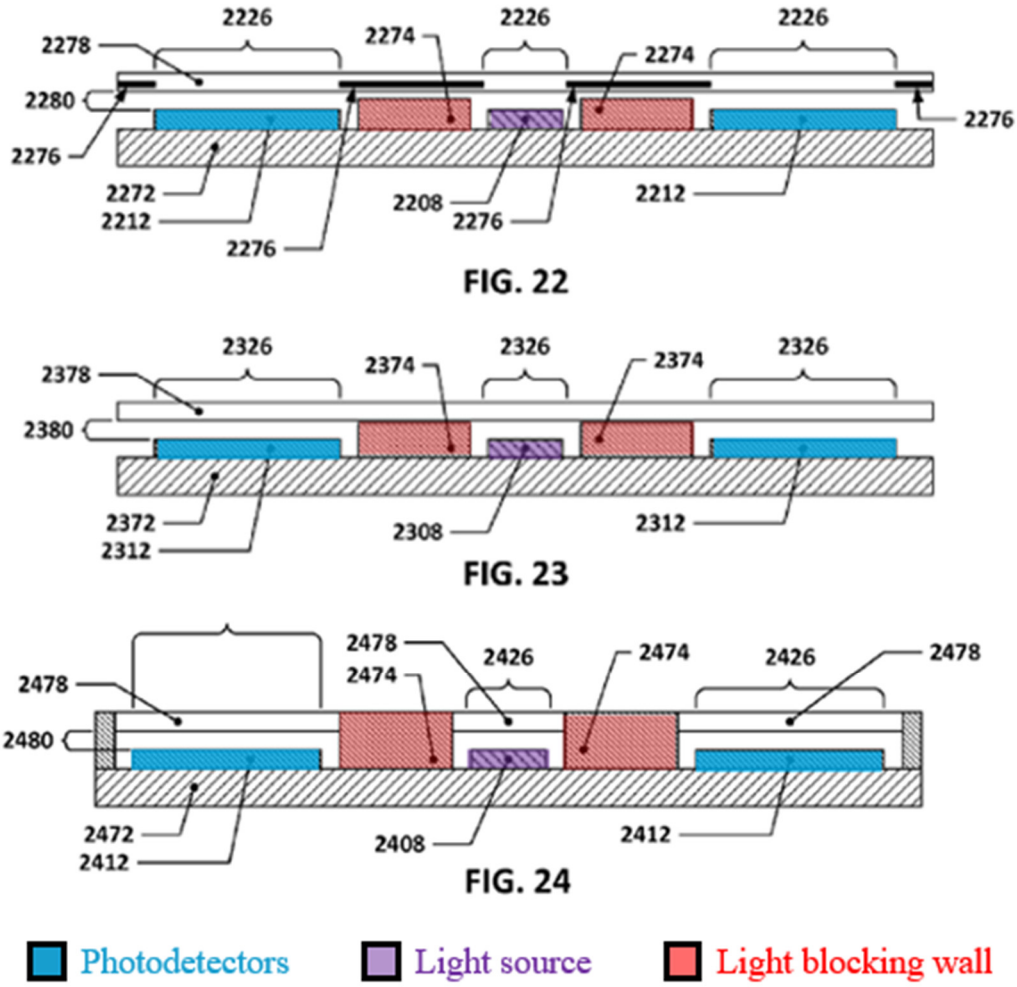

APPLE-1014, FIGS. 22 (top), 23 (center), 24 (bottom).

Based at least on the configuration shown in Sarantos' FIGS. 22-24 (in particular that the photodetector elements 2212, 2312, 2412 are placed in a circular arrangement around the light source 2208, 2308, 2408 and that the light blocking/enclosing walls 2274, 2374, 2474 are between the light source 2208, 2308, 2408 and the photodetector elements 2212, 2312, 2412), a POSITA would have understood or at least found it obvious that the light blocking walls 2274,

2374, 2474 are configured in a circular manner around the light source 2208, 2308, 2408. APPLE-1003, [40]; *see e.g.*, APPLE-1014, FIGS. 22-24, 17:1-18:35. The modified FIG. 18 below shows a top view of how the light blocking/enclosing walls 2274, 2374, 2474 are configured based on Sarantos' disclosure:

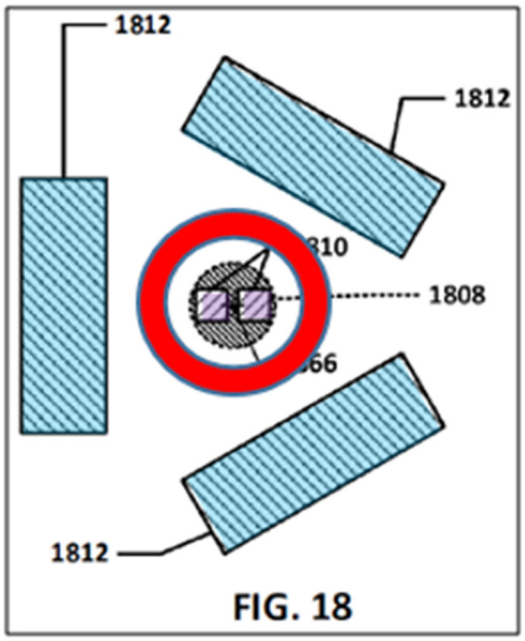

Photodetectors Light source Light blocking wall

APPLE-1014, FIG. 18 (modified to show light blocking wall)

In addition, because the light blocking/enclosing wall 2274, 2374, 2474 blocks the light from being emitted sideways beyond it, a POSITA would have understood that the light blocking/enclosing wall 2274, 2374, 2474 guides the light emitted by light source 2208, 2308, 2408 to the tissue measurement site. APPLE-1003, [41]; *see e.g.*, APPLE-1014, FIGS. 22-24, 17:1-18:35. This creates at least

an initial circular region in the tissue measurement site because the ring formed by the light blocking/enclosing walls 2274, 2374, 2474 itself is circular. *Id*.

And beyond the initial circular region of the tissue measurement site, Sarantos also generally discloses that the tissue measurement site is circular. APPLE-1003, [42]. For example, Sarantos' FIG. 6 depicts a circular region of the tissue measurement site and a model of the light that is emitted onto a skin. APPLE-1014, FIG. 6, 6:4-8 ("FIG. 6 depicts a simulation of the AC intensity or power of light that is emanated within a 16mm by 16 mm region of skin as a result of light that is shined into the skin at the center of the region.").

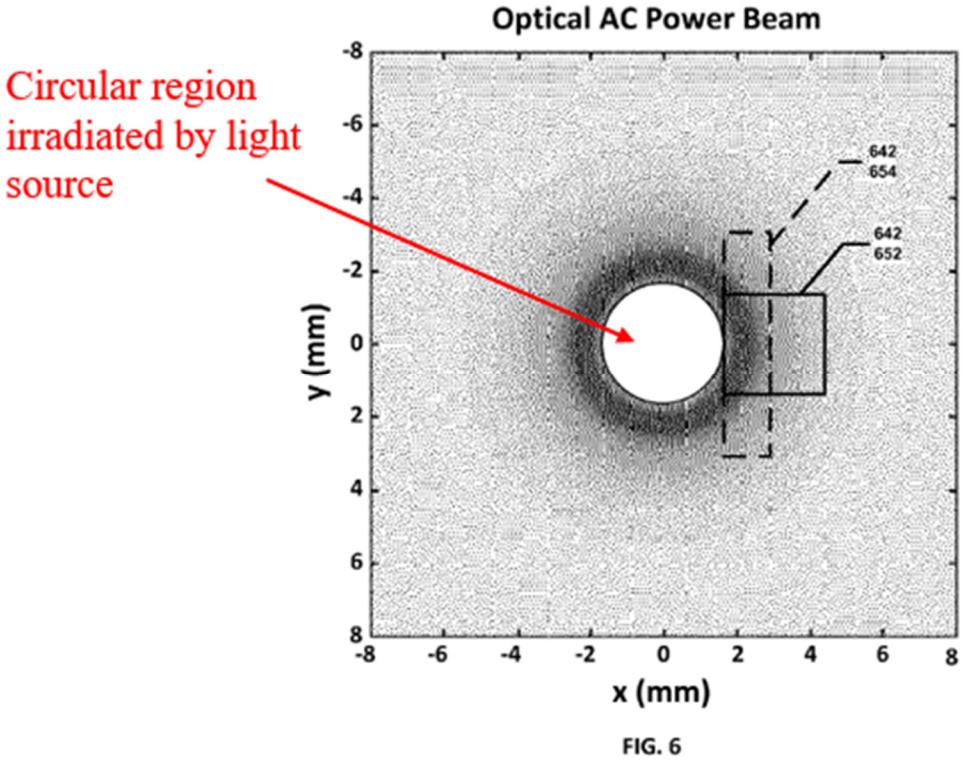

APPLE-1014, FIG. 6

Sarantos also describes arranging photodetector elements according to geometric constraints and explains that the photodetector elements may be arranged to have more than 80-86% overlap with annular (i.e., circular) regions of the tissue measurement site. APPLE-1014, 16:24-45 ("HAR photodetector elements may be sized and arranged to satisfy certain geometric constraints.... An annular region 2158 having an inner radius of r_i, and an outer radius of r_o may be centered on the light source 2108 …. In such circumstances, the HAR photodetector may be sized such that … there is at least 80% overlap between the annular region 2158 and the HAR photodetector element 2112 (the overlap is indicated in FIG. 21 by diagonal cross-hatching; approximately 86% of the HAR photodetector 2112 in this example overlaps with the annular region 2158)."); APPLE-1003, [43]:

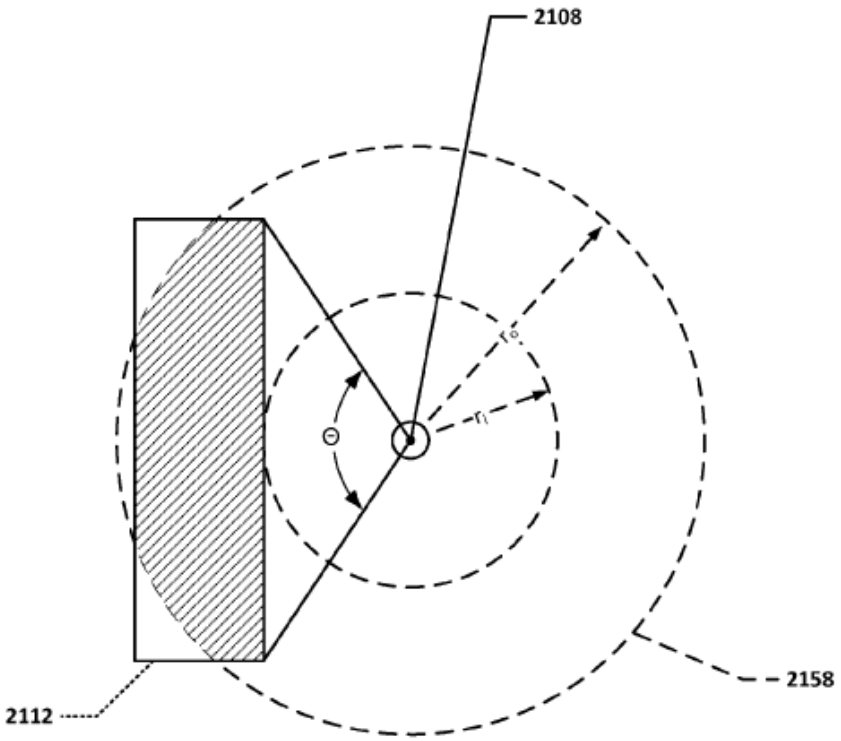

FIG. 21

APPLE-1014, FIG. 21

Limitation [1d]

As explained above in Section III.A.1, after detecting the attenuated light, the detectors output electrical signals so that a physiological parameter can be determined. APPLE-1014, 20:7-34; APPLE-1003, [44].

In more detail, referring to FIG. 3, Sarantos discloses that "[l]ight emanating from the person's skin is then measured by a photodetector element; this measured light intensity is depicted as data trace 348. The data trace 348 may be split into a DC component 346, which does not fluctuate with time, and an AC component 344, which does fluctuate with time." APPLE-1014, 8:3-18; APPLE-1003, [45].

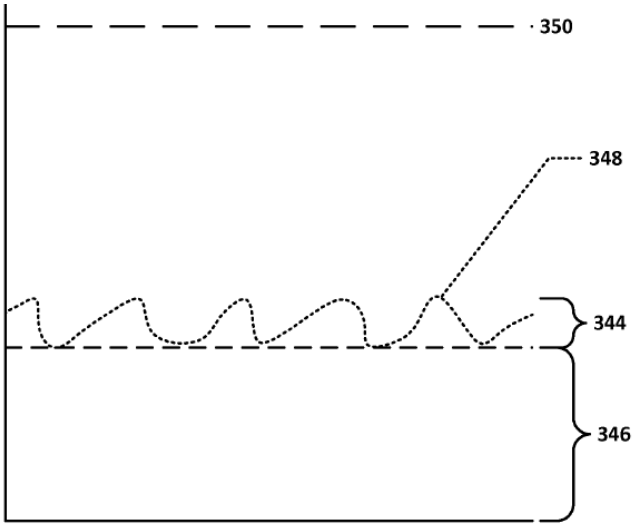

APPLE-1014, FIG. 3

A POSITA would have understood that this data trace would be generated based on signals from Sarantos' photodetector elements representative of the intensity of the detected light. APPLE-1003, [46]; APPLE-1014, 9:8-14 ("photodetectors may also include other components ... that interact with the photodetector element in order to provide power or produce signal output"). Moreoever, Sarantos explains that a control logic 2706 "may [ ] cause the light source 2708 to emit light at desired times, and may receive a signal indicative of an amount of detected light from the photodetector element 2712." APPLE-1014, 20:30-34. The control logic "collect[s] data from one or more photodetectors, and analyz[es] at least the data collected from the one or more photodetectors in order to determine a measurement of a person's heart rate." *Id.*, 20:7-15. As shown in

FIG. 27, the control logic 2706 includes a processor 2768 and a memory 2770, and is coupled to a photodetector element 2712 and a light source 2708. *Id.*, 20:24-33. Sarantos discloses that a processor in the control logic can provide functionalities such as "controlling the intensity with which the light source(s) is illuminated, collecting data from one or more photodetectors, and analyzing at least the data collected from the one or more photodetectors in order to determine a measurement of a person's heart rate." *Id.*, 20:7-23; APPLE-1003, [46].

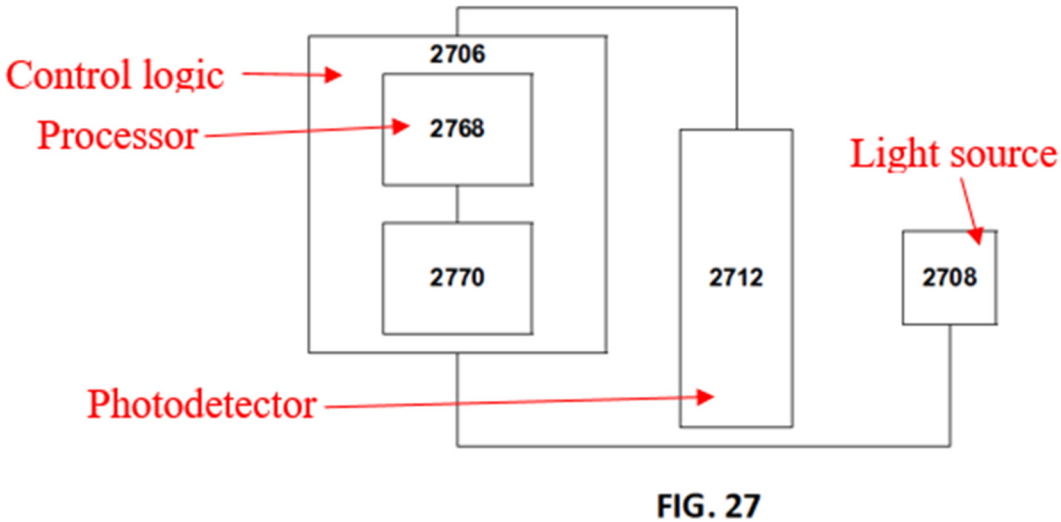

APPLE-1014, FIG. 27

Based on at least this disclosure, as Dr. Anthony notes in his declaration, "it would be obvious to a POSITA that the photodetector elements output data to a processor (e.g., 2768) in the control logic 2706, which then analyzes the data

collected by photodetectors in order to determine a physiological parameter such as the person's heart rate." APPLE-1003, [47] (citing APPLE-1014, 20:7-23).

Accordingly, Sarantos renders this limitation obvious.

Limitation [1e]

As explained in [1pre], [1d], Sarantos describes that a processor (e.g., 2768) in the control logic 2706 is configured to receive data collected by photodetectors to determine a physiological parameter such as the person's heart rate. APPLE-1014, 20:7-23; APPLE-1003, [48].

Limitation [1f]

As explained above with respect to [1pre], [1c], Sarantos discloses a light blocking wall 2274, 2374, 2474 formed between the light source 2208, 2308, 2408 and photodetector elements 2212, 2312, 2412, as shown in FIGS 22-24 below. APPLE-1014, FIGS. 22-24, 17:1-18:35; APPLE-1003, [49].

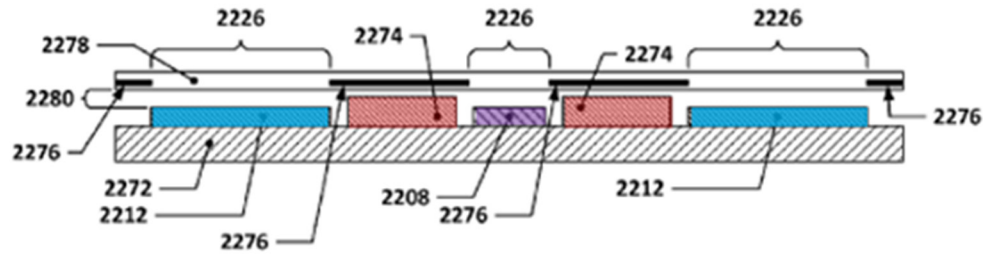

FIG. 22

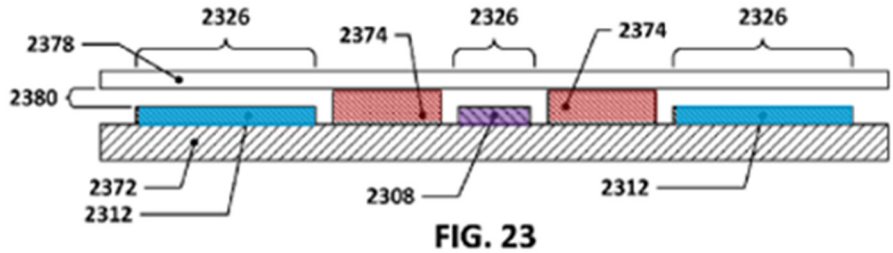

FIG. 23

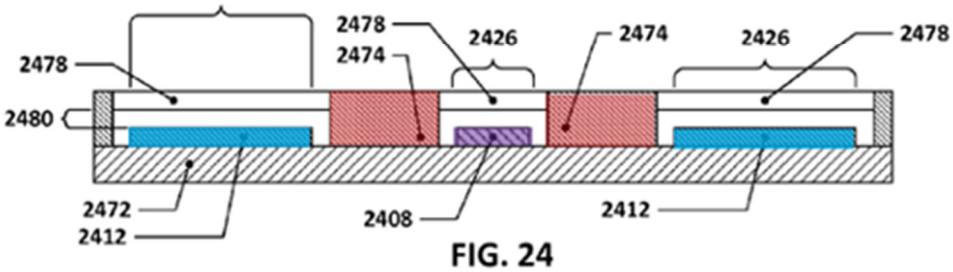

FIG. 24

Photodetectors Light source Light blocking wall

APPLE-1014, FIGS. 22 (top), 23 (center), 24 (bottom) (annotated).

Accordingly, Sarantos renders this limitation obvious.

Limitation [1g]

As explained in [1pre], [1c], and [1f], Sarantos discloses a light blocking wall 2274, 2374, 2474 formed between the light source 2208, 2308, 2408 and photodetector elements 2212, 2312, 2412. APPLE-1014, FIGS. 22-24, 17:1-18:35.

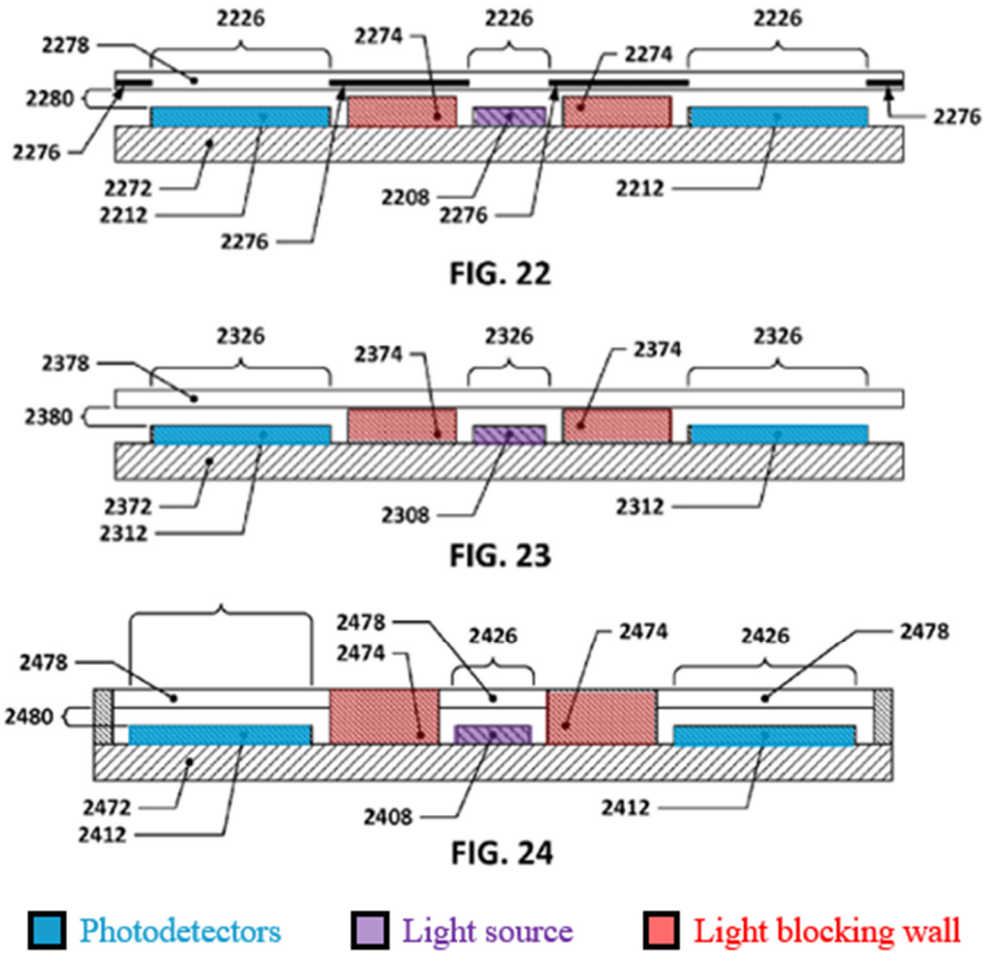

APPLE-1014, FIGS. 22 (top), 23 (center), 24 (bottom) (annotated).

As explained in [1c], *supra*, it would have been obvious to a POSITA that Sarantos' light blocking/enclosing walls 2274, 2374, 2474 are circular, as shown in the following modified FIG. 18 from Sarantos. APPLE-1003, [50].

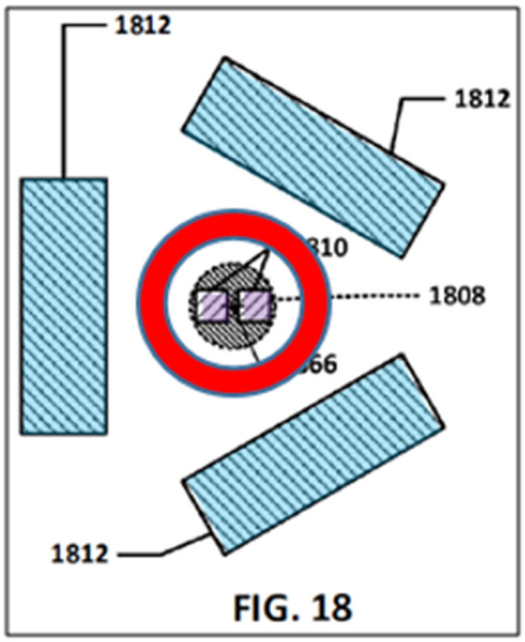

Photodetectors Light source Light blocking wall

APPLE-1014, FIG. 18 (modified to show light blocking wall)

Accordingly, Sarantos renders this limitation obvious.

Limitation [1h]

As explained in [1c], [1g], Sarantos describes that the photodetectors of its PPG sensor are arranged in a circular array. APPLE-1014, 8:13-29, 14:46-62, 15:24-27, 20:52-57; APPLE-1003, [51]. As shown in Sarantos' FIG. 18, this circular array of detectors has a spatial configuration corresponding to the Sarantos' light blocking/enclosing wall 2274, 2374, which protects light from the emitters from reaching the photodetectors directly. APPLE-1014, FIGS. 15, 18, 22-24, 14:54-15:45, 17:1-18:35.

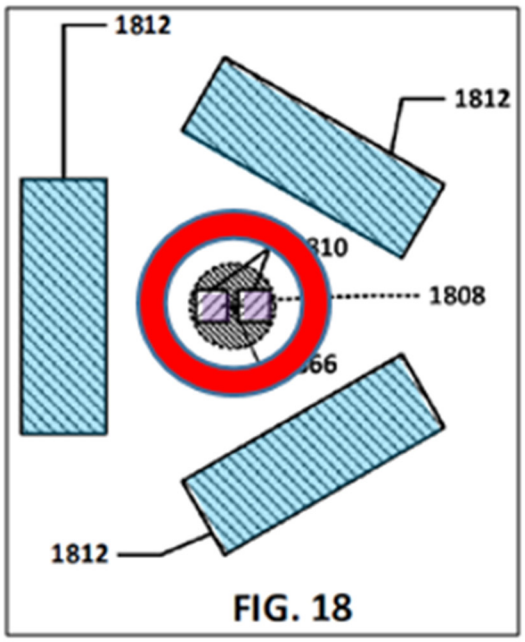

Photodetectors Light source Light blocking wall

APPLE-1014, FIG. 18 (modified to show light blocking wall)

As explained in [1c], [1g], a POSITA would have understood that Sarantos' light blocking/enclosing wall 2274, 2374, 2474 effectively guides the light emitted by light source 2208, 2308, 2408 to the circular tissue measurement site. APPLE-1003, [52]. In this manner, the photodetectors in Sarantos are arranged in an array having a spatial configuration corresponding to the circular portion of the tissue measurement site. APPLE-1003, [52].

(b) **Limitation [4]**

As explained in 1[g], [1h], Sarantos' light blocking walls form a circular wall enclosing the light source emitters within its perimeter and prevent light from

traveling directly from the emitters to the detectors, as shown in the modified FIG. 18 below. APPLE-1014, FIGS. 22-24, 17:1-18:35; APPLE-1003, [53].

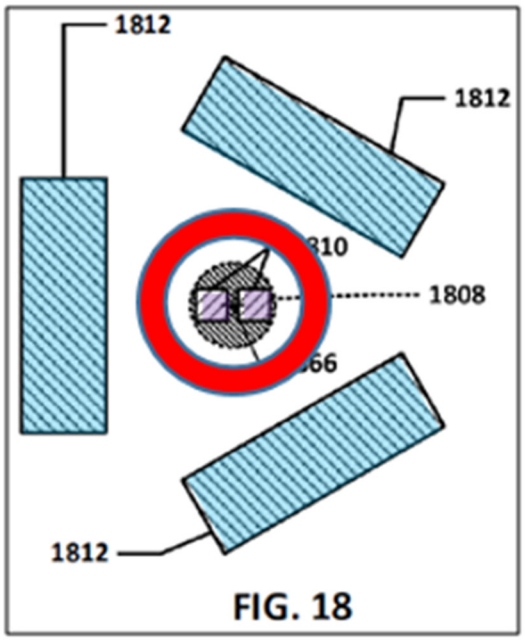

Photodetectors Light source Light blocking wall

APPLE-1014, FIG. 18 (modified to show light blocking wall)

(c) **Limitations [5a,b]**

As explained in [1pre], [1a], *supra*, Sarantos describes a "***wristband-type wearable*** fitness monitor" that measures physiological parameters, such as heartbeat, based on reflected light from a tissue measurement site on the user's wrist. APPLE-1014, 5:55-59, 8:39-58; APPLE-1003, [54].

As also previously discussed (*supra* [1pre]), Sarantos' PPG sensor has photodetector elements and light emitting sources on the same (first) side of the

tissue measurement site. The light sources emit light which is then reflected by the user's skin and body and measured by the photodetector elements. APPLE-1014, 1:7-24, 17:13-25. As Dr. Anthony notes: "[a] POSITA would have understood this configuration to be a reflectance measurement configuration because it is operable to detect and measure physiological parameters based on reflected light." APPLE-1003, [55] (citing APPLE-1016, 1:18-23, 2:15-23, 3:8-12, 4:22-25, 2:15-23, 5:2-15, 6:1-8, 7:5-28, FIGS. 3A, 3B).

(d) **Limitation [8]**

As previously discussed (*supra* [1pre]), Sarantos' monitoring device determines "physiological parameters" such as the person's "***heart rate***" and "***blood oxygenation levels***." APPLE-1014, 2:5-14, 7:12-14, 13:39-47; APPLE-1003, [56].

(e) **Claim 9**

Limitation [9pre]

As indicated in [1pre], Sarantos describes a method of measuring a phsyiological parameter in a user's blood such as the user's heart rate. APPLE-1014, 5:55-59, 1:6-24, 13:44-53 ("photoplethysmographic techniques may also be used to measure other physiological parameters besides heart rate, such as blood oxygenation levels"), 7:24-60.

Limitation [9a]

Supra [1pre], [1a], [1b].

Limitation [9b]

Supra [1c].

Limitation [9c]

Supra [1f].

Limitation [9d]

Supra [1g].

Limitation [9e]

Supra [1f], [1g].

Limitation [9f]

Supra [1c], [1h].

Limitation [9g]

Supra [1d]

Limitation [9h]

Supra [1d], [1e].

Limitation [9i]

Supra [1d], [1e].

(f) **Limitation [13]**

Supra [5a,b].

(g) **Limitation [15]**

Supra [8].

(h) **Limitation [16]**

Sarantos describes that when measuring "other physiological parameters besides heart rate, such as blood oxygenation levels … it may be desirable to utilize ***an LED that predominantly emits light in the*** red or ***infrared spectrum***." *Id*., 13:45-49; *see also* 13:49-58; APPLE-1003, [57].

(i) **Limitation [17]**

As explained in [1pre], [1c], Sarantos' PPG sensor includes multiple photodetectors 1812 in a circular configuration may be used to detect light (reflected from the person's flesh). APPLE-1014, 8:13-29, 14:60-62, 15:24-27, 20:52-57, FIGS. 15, 18, 15:24-27; APPLE-1003, [58].

(j) **Limitation [18]**

As explained in [1pre], "PPG sensors operate by shining light into a person's skin. This light diffuses through the person's flesh and a portion of this light is then emitted back out of the person's skin in close proximity to where the light was introduced into the flesh; the amount of light that is emitted back out of the

person's flesh attenuates with increasing distance from the light source." APPLE-1014, 7:24-36, 1:7-24. As shown in FIG. 18, multiple photodetectors 1812 in a circular configuration may be used to detect light (reflected from the person's flesh). APPLE-1014, 8:13-29, 14:60-62, 15:24-27, 20:52-57; APPLE-1003, [59].

Sarantos teaches using microlens arrays or lenses that can be "placed over a HAR photodetector element to improve collection efficiency." APPLE-1014, 18:23-35. As Dr. Anthony notes: "[a] POSITA would have understood that the lenses are used as a light concentrator that direct light reflected from the tissue measurement site onto the photodetector." APPLE-1003, [60] (citing APPLE-1014, 18:23-35, 34:5-18). By doing so, the photodetector has an improved collection efficiency. APPLE-1003, [60]; *see, e.g.,* APPLE-1005, 34:5-18 (describing the use of a lens to facilitate light collection).

(k) **Claim 19**

Limitation [19pre]

Supra [1pre].

Limitation [19a]

Supra [1a].

Limitation [19b]

Supra [1a].

Limitation [19c]

Supra [1a], [1b].

Limitation [19d]

Supra [1c].

Limitation [19e]

Supra [1d].

Limitation [19f]

Supra [1e].

In addition to reciting the same/similar language as [1e], [19f] additionally recites that the "physiological parameter [is] indicative of a state or trend of wellness of the user." A POSITA would have understood that heart rate and oxygen saturation level, both physiological parameters determined by Sarantos, are indicative of a state or trend of wellness of the user. APPLE-1003, [61]; *see, e.g.,* APPLE-1005, 21:22-44, 58:21-23, 58:45-51; APPLE-1018, 1:40-60.

Limitation [19g]

Supra 1[f].

Limitation [19h]

Supra 1[g].

Limitation [19i]

As explained in [1c], [1f], and [1g], Sarantos describes light blocking/enclosing walls 2274, 2374, 2474 that prevent light emitted from the light emission source from being detected by the plurality of detectors without attenuation by the tissue. APPLE-1014, FIGS. 15, 18, 22-24, 14:54-15:45, 17:1-18:35; APPLE-1003, [62].

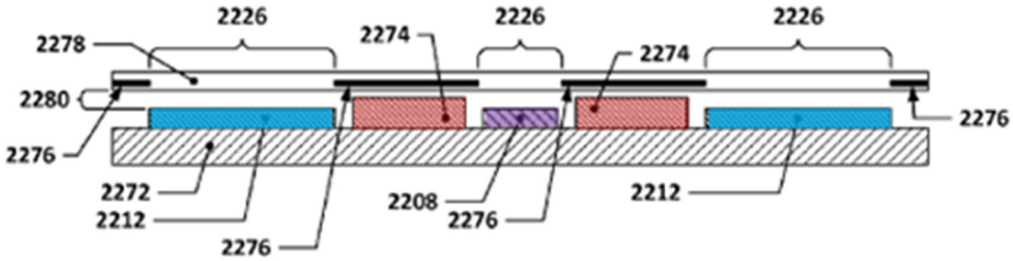

FIG. 22

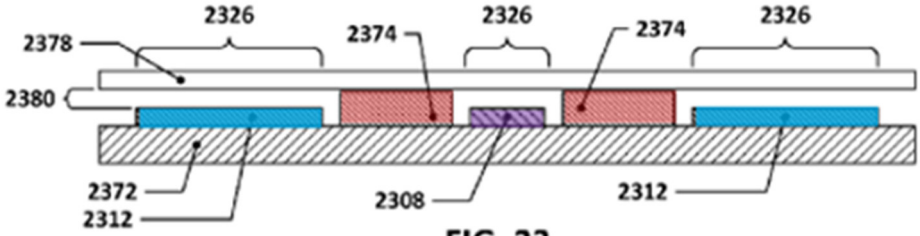

FIG. 23

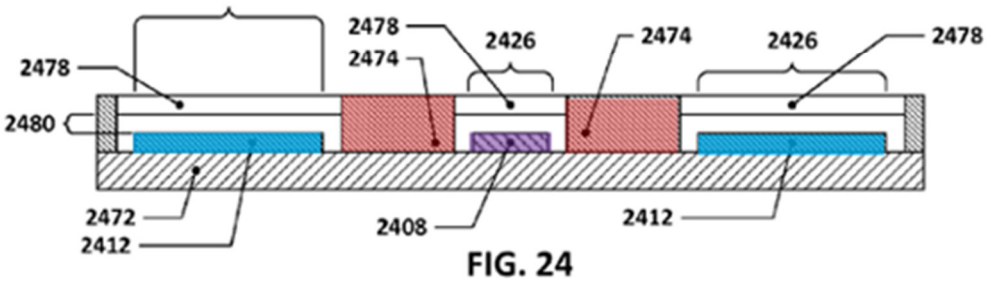

FIG. 24

Photodetectors Light source Light blocking wall

APPLE-1014, FIGS. 22 (top), 23 (center), 24 (bottom).

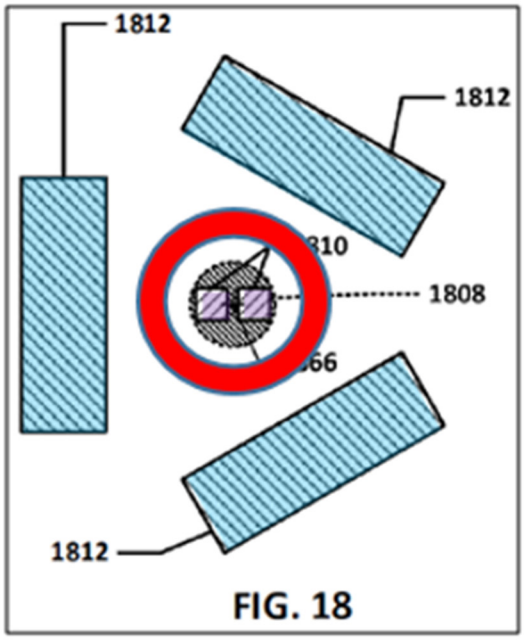

APPLE-1014, FIG. 18 (modified to show light blocking wall)

As Dr. Anthony states in his declaration, "[a] POSITA would have understood that by preventing light from passing through, Sarantos' walls 2274, 2374, 2474 form a light isolation chamber defined by the walls 2274, 2374, 2474." APPLE-1003, [63] (citing APPLE-1014, FIGS. 15, 18, 22-24, 14:54-15:45, 17:1-18:35).

Limitation [19j]

Supra 1[f] and 1[g].

Limitation [19k]

Supra 1[c] and 1[h].

(l) **Claim 24**

Limitation [24a]

Supra [5a].

Limitation [24b]

Supra [5b].

(m) **Limitations [25a,b]**

Supra [1a], [16].

(n) **Limitation [26]**

Supra [1c], [17].

(o) **Limitation [27]**

Supra [18].

(p) **Limitation [28a,b]**

Supra [1a], [16].

(q) **Limitation [29]**

Supra [1c], [17].

(r) Limitation [30]

Supra [18].

B. GROUND 1B: Claims 1, 2, 4, 5, 8, 9, 11, 13, 15-19, 22, and 24-30 are obvious based on Sarantos in view of Mendelson-1991

1. Overview of Mendelson-1991

Similar to Sarantos, Mendelson-1991 teaches a "reflectance pulse oximeter sensor" including "an array of six identical photodetectors arranged symmetrically in a hexagonal configuration surrounding two pairs of red … and infrared … light-emitting diodes." Mendelson-1991, 2. Mendelson-1991 further teaches that the sensor is configured with a circular "optical shield" between the photodetectors and the light-emitting diodes. *See* Mendelson-1991, 2, FIGS. 1(A), 1(B); APPLE-1003, [64]. FIGS 1(A) and 1(B) from Mendelson-1991 depict a frontal view and a side view, respectively, of this configuration:

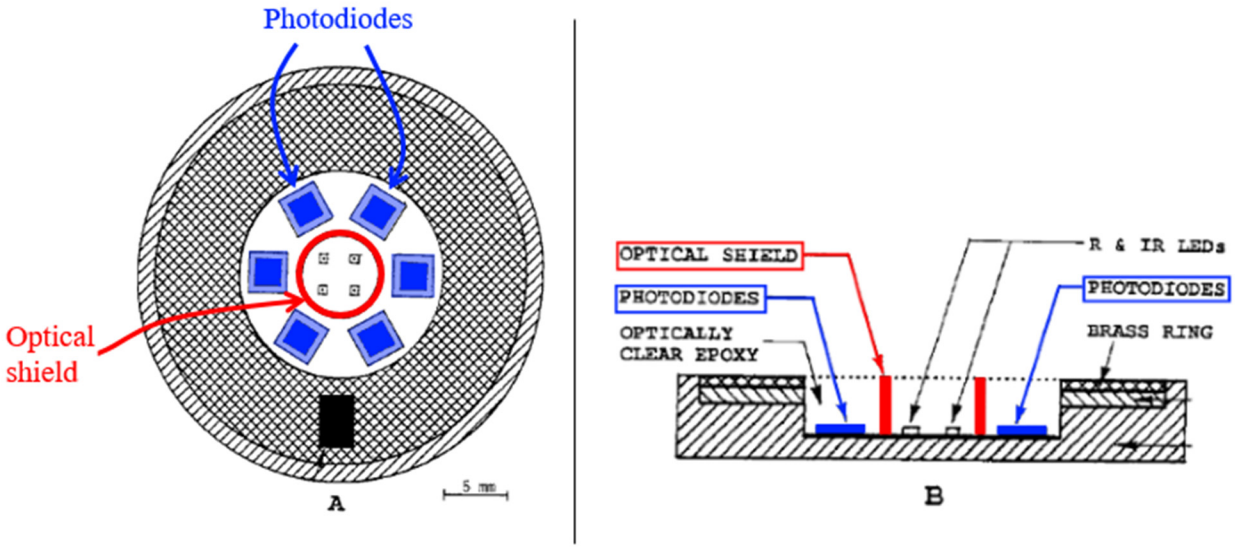

APPLE-1015, FIG. 1(A) (left), FIG. 1(B) (right)

2. The combination of Sarantos and Mendelson-1991

A POSITA would have combined the teachings of Sarantos and Mendelson-1991 because doing so would have amounted to nothing more than the use of a known technique to improve similar devices in the same way and combining prior art elements according to known methods to yield predictable results. *See KSR v. Teleflex*, 550 U.S. 398, 417 (2007). Here, both Sarantos and Mendelson-1991 are related to obtaining physiological parameters using a reflection system in which 1) a light shield/block layer is located between the emitters and detectors, and 2) emitters emit radiation that is reflected from the human tissue and detected by detectors in a reflection measurement setup. APPLE-1014, 7:24-36, 1:7-24, 8:13-29, 14:60-62, 15:24-27, 20:52-57, 13:44-53; APPLE-1015, 2; APPLE-1003, [65].

To the extent one would dispute that Sarantos' light blocking/enclosing wall 2274, 2374, 2474 is not circular, a POSITA would have implemented a circular light blocking/enclosing wall 2274, 2374, 2474 in Sarantos based on the teachings of Mendelson. APPLE-1003, [65]; APPLE-1015, 2, FIGS. 1(A), 1(B). Implementing the circular light blocking/enclosing wall 2274, 2374, 2474 would have been obvious to do so because a circular arrangement of detectors surrounds the emitters, the circular light blocking/enclosing wall 2274, 2374, 2474 would ensure that only light that has been attenuated from the tissue measurement site is detected and not light directly emitted from the emitters, as described by both Sarantos and Mendelson-1991. APPLE-1003, [65]; *see, e.g.,* APPLE-1014, 17:26-32.

In addition, it would have been obvious to a POSITA to modify Sarantos' pulse oximeter to include the display taught by Mendelson, but the modification would have amounted to nothing more than the use of a known technique to improve similar devices in the same way and combining prior art elements according to known methods to yield predictable results. *See KSR v. Teleflex*, 550 U.S. 398, 417 (2007); APPLE-1003, [66]. Including Mendelson-1991's display in Sarantos' device would be beneficial because a user would be able to view any measurement data through the display. Such a display would facilitate user interaction and ease of use of Sarantos' device. APPLE-1003, [66]. The combination of Sarantos and Mendelson-1991 would have been predictable and

had a reasonable expectation of success as the elements of the combined system would each perform similar functions they had been known to perform prior to the combination. APPLE-1003, [66].

3. Analysis

(a) Claim 1

Limitations [1pre], [1a], [1b]

The combination of Sarantos and Mendelson-1991 renders these limitations obvious for the same reasons discussed with respect to these limitation in Ground 1A, *supra*.

Limitation [1c]

To the extent it is argued that Sarantos does not disclose "attenuation by a circular portion of the tissue measurement site" or does not teach implementing a circular light blocking/enclosing wall around the light source, Mendelson-1991 teaches this feature. For instance, Mendelson-1991 discloses an optical sensor to obtain pulse oximetry measurements. APPLE-1015, 2. The sensor, like Sarantos' device, has a plurality of emitters surrounded by a plurality of detectors in a circular configuration with a light shield wall between them. APPLE-1015, 2, FIG. 1. The circular configuration of the detectors allows measurements from a circular portion of the tissue measurement site to be obtained. APPLE-1003, [68]. FIGS. 1(A) and 1(B) from Mendelson-1991 show this configuration:

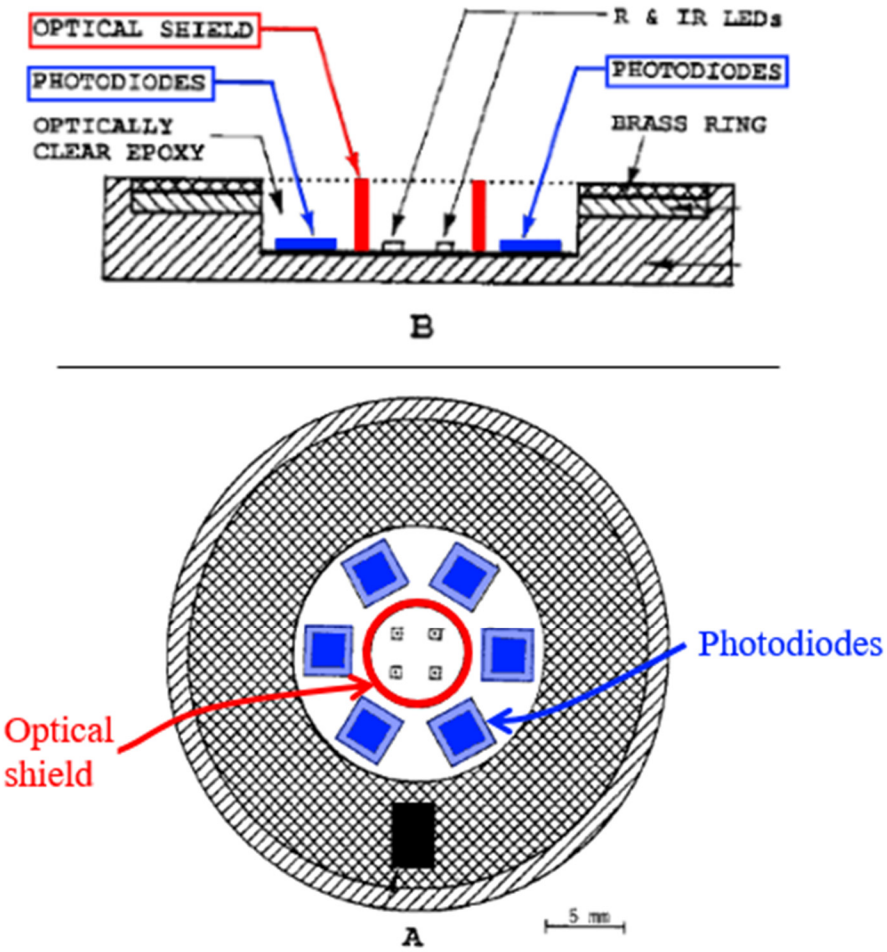

Mendelson-1991, FIG. 1B (top), FIG. 1A (bottom)

Like Sarantos, Mendelson-1991 discloses that measurements can made by an array of photodetectors in a circular arrangement around LED emission sources. APPLE-1015, 2; APPLE-1014, FIGS. 15, 18. Mendelson-1991 more explicitly shows the circular optical shield between the photodetectors and LED emissions sources. APPLE-1015, FIG. 1. As discussed above (*supra* III.B.2), a POSITA would have found it obvious to implement the similar light blocking wall of

Sarantos in the circular configuration of the optical shield in Mendelson-1991. APPLE-1003, [69].

Limitations [1d], [1e], [1f]

The combination of Sarantos and Mendelson-1991 renders these limitations obvious for the same reasons discussed with respect to these limitation in Ground 1A, *supra*.

Limitation [1g]

As explained in Ground 1 – [1c], *supra*, it would have been obvious to a POSITA that Sarantos' light blocking/enclosing walls 2274, 2374, 2474 are circular, as shown in the following modified FIG. 18 from Sarantos. APPLE-1003, [70].

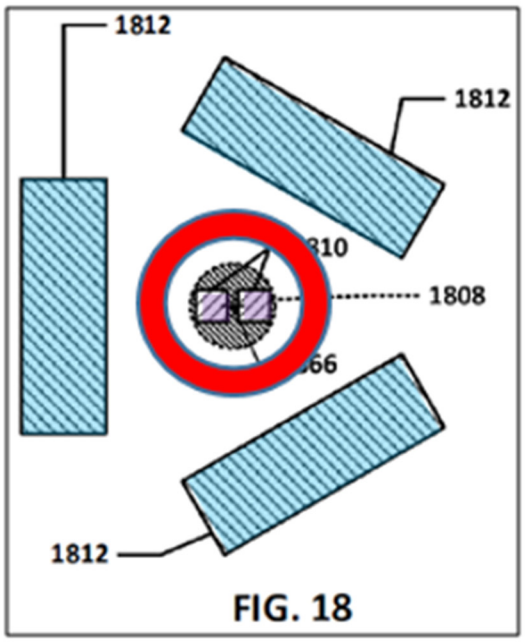

Photodetectors Light source Light blocking wall

APPLE-1014, FIG. 18 (modified to show light blocking wall)

And to the extent such disclosure is disputed, Mendelson-1991 discloses a circular arrangement of photodiode detectors and a circular optical shield between the photodetectors and emitters (like in Sarantos), as shown below. APPLE-1015, FIG. 1, p2.

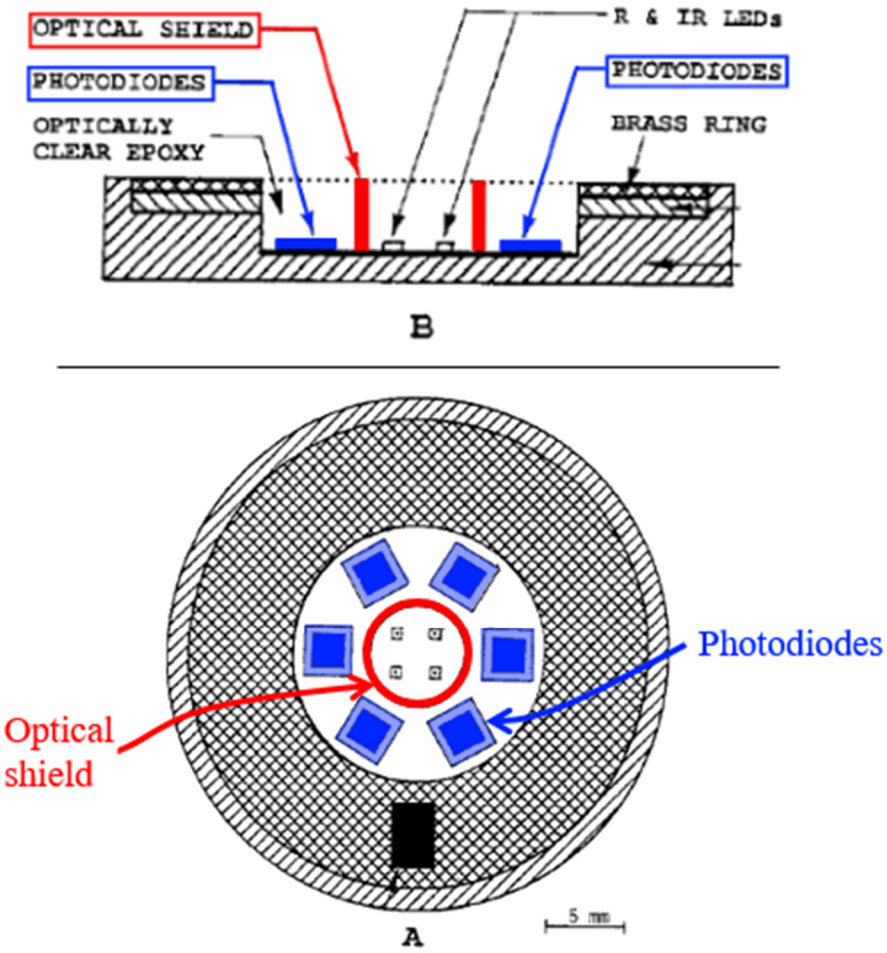

Mendelson-1991, FIG. 1B (top), FIG. 1A (bottom)

As shown in Sarantos' FIGS. 22-24 (and similarly in Mendelson-1991's FIG. 1 above), the light emission source 2208, 2308, 2408 is proximate to a first side of the light blocking/enclosing walls 2274, 2374, 2474 and photodetector elements 2212, 2312, 2412 are proximate to a second side of the light blocking/enclosing walls 2274, 2374, 2474. APPLE-1003, [72].

In addition, as explained above in [1c], Sarantos discloses light blocking/enclosing walls 2274, 2374, 2474 defining the circular portion of the

tissue measurement site and that the enclosing wall prevents at least a portion of light emitted from the light emission source from being detected by the plurality of detectors without attenuation by the tissue. APPLE-1014, FIGS. 15, 18, 22-24, 14:54-15:45, 17:1-18:35; APPLE-1003, [73].

Alternatively, as explained above in [1c] with respect to the Sarantos-Mendelson-1991 combination, Mendelson-1991's circular optical shield between the photodetectors and LED emissions sources that defines the circular portion of the tissue measurement site also prevents at least a portion of light emitted from the light emission source from being detected by the plurality of detectors without attenuation by the tissue. APPLE-1015, FIG. 1, pg. 2; APPLE-1003, [74].

Limitation [1h]

As explained in [1c], [1g], Sarantos and Mendelson-1991 both arrange their photodetectors in a circular array. APPLE-1014, 8:13-29, 14:46-62, 15:24-27, 20:52-57; APPLE-1015, FIG. 1, pg. 2; APPLE-1003, [75]. As shown in Sarantos' FIG. 18 and Mendelson-1991's FIG. 1, this circular array of detectors has a spatial configuration corresponding to the Sarantos' light blocking/enclosing wall 2274, 2374 or Mendelson-1991's optical shield, which protects light from the emitters from reaching the photodetectors directly. APPLE-1014, FIGS. 15, 18, 22-24, 14:54-15:45, 17:1-18:35; APPLE-1003, [75].

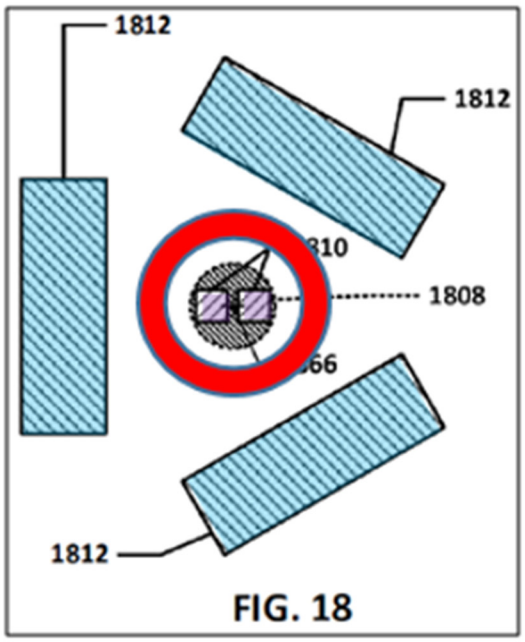

Photodetectors Light source Light blocking wall

APPLE-1014, FIG. 18 (modified to show light blocking wall)

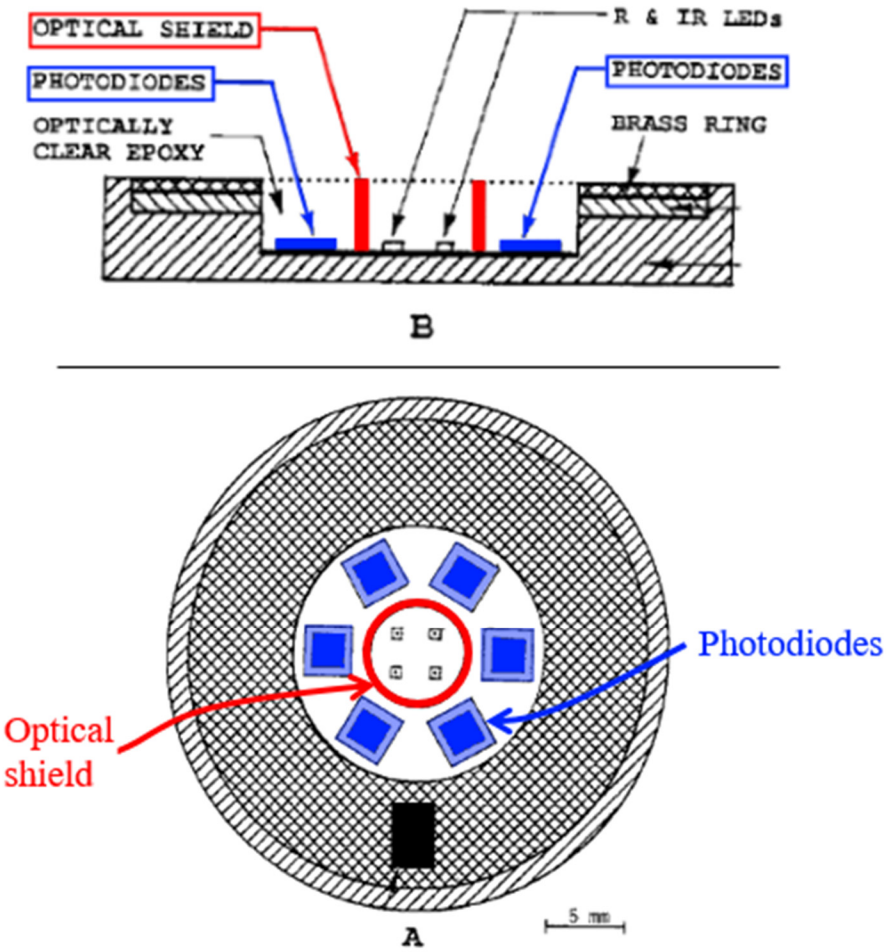

Mendelson-1991, FIG. 1B (top), FIG. 1A (bottom)

As explained in [1c], [1g], a POSITA would have understood that Sarantos' light blocking/enclosing wall 2274, 2374, 2474 effectively guides the light emitted by light source 2208, 2308, 2408 to the circular tissue measurement site. APPLE-1003, [76]. Similarly, Mendelson-1991's optical shield would guide light onto the circular tissue measurement site. APPLE-1003, [76]; *see, e.g.,* APPLE-1015, FIG. 1, pg. 2. In this manner, the detectors in Sarantos and Mendelson-1991 are

arranged in an array having a spatial configuration corresponding to the circular portion of the tissue measurement site. APPLE-1003, [76].

(b) **Limitation [2]**

As explained in Ground 1A – [1pre], Sarantos' PPG sensor may be used to measure heart rate and blood oxygenation levels. APPLE-1014, 13:44-53. Sarantos is silent regarding the display of the measured data. Mendelson-1991 teaches using an Accusat Pulse Oximeter to display measurement data. APPLE-1015, pg. 3. In particular, Mendelson-1991 teaches displaying oxygen saturation and pulse levels of a user being tested. *Id.*; APPLE-1003, [77].

As previously discussed (*supra* § III.B.2), it would have been obvious to a POSITA to modify Sarantos' monitoring device to include the display taught by Mendelson-1991. APPLE-1003, [78].

(c) **Limitation [4]**

As explained in 1[g], [1h], in the combination, Mendelson-1991's optical shield forms a circular wall enclosing the light source emitters within its perimeter and prevents light from traveling directly from the emitters to the detectors. APPLE-1015, FIG. 1, 2; APPLE-1003, [79]. FIG. 1 from Mendelson-1991 shows this configuration:

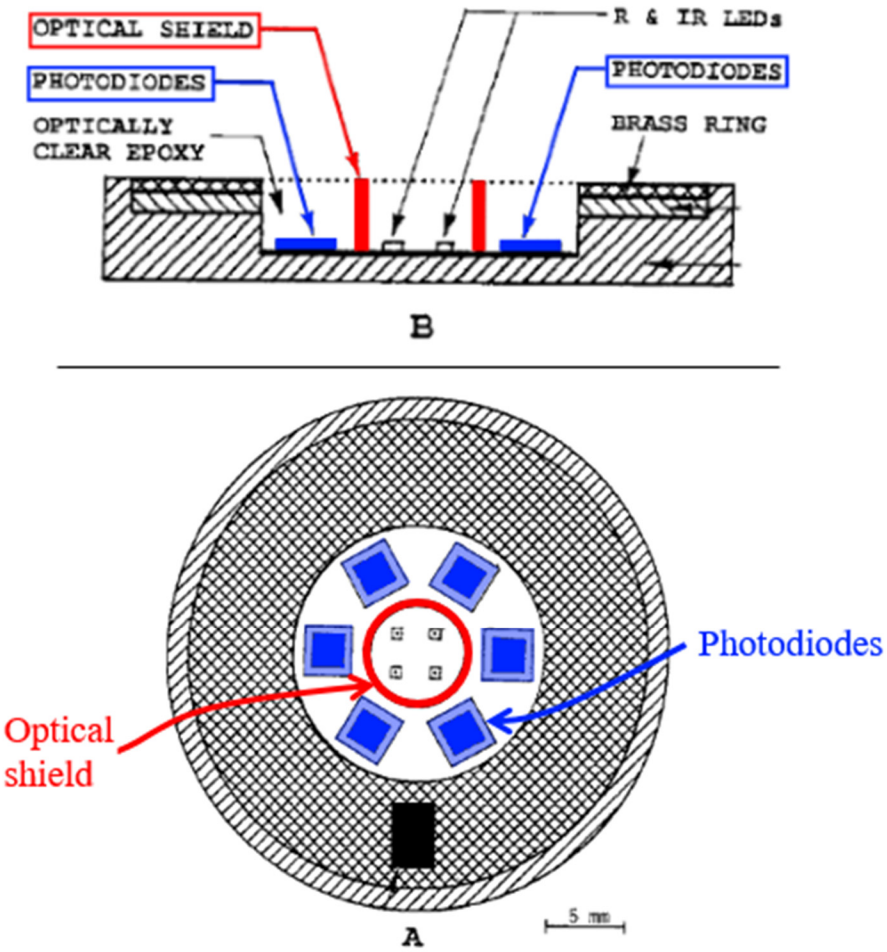

Mendelson-1991, FIG. 1B (top), FIG. 1A (bottom)

(d) **Limitations [5a,b]**

As explained in [1pre], [1a], *supra*, in the combination, Sarantos describes a "***wristband-type wearable*** fitness monitor" that measures physiological parameters, such as heartbeat, based on reflected light from a tissue measurement site on the user's wrist. APPLE-1014, 5:55-59, 8:39-58; APPLE-1003, [80].

As also previously discussed (*supra* [1pre]), Sarantos' PPG sensor has photodetector elements and light emitting sources on the same side of the tissue

measurement site. *See e.g.*, APPLE-1014, FIG. 2. The light emitting sources emit light which is then reflected by the user's skin and body and measured by the photodetector elements. APPLE-1014, 1:7-24, 17:13-25; APPLE-1003, [81].

Also in the combination, Mendelson-1991 describes a similar configuration to that of Sarantos, where light sources and photodetectors are configuration on the same side of a device in order to perform physiological measurements based on light reflected from a person's skin. *See* APPLE-1015, 6. Mendelson-1991 refers to this configuration as a "reflectance pulse oximeter sensor." *Id*. Based at least on this disclosure, Dr. Anthony states that "a POSITA would have understood or at least found it obvious that Sarantos' light sources and detectors are arranged in a reflectance measurement configuration." APPLE-1003, [82] (citing APPLE-1015, 6).

(e) **Limitation [8]**

In the combination, Mendelson-1991 describes "measur[ing] ***arterial hemoglobin oxygen saturation*** (SaO_2) … using a reflectance pulse oximeter sensor." APPLE-1015, 5 (Abstract), 6 (section entitled "Reflectance Pulse Oximetry"); APPLE-1003, [83].

(f) **Claim 9**

Limitation [9pre]

Supra [1pre].

Limitation [9a]

Supra [1pre], [1a], [1b].

Limitation [9b]

Supra [1c].

Limitation [9c]

Supra [1f].

Limitation [9d]

Supra [1g].

Limitation [9e]

Supra [1f], [1g].

Limitation [9f]

Supra [1c], [1h].

Limitation [9g]

Supra [1d]

Limitation [9h]

Supra [1d], [1e].

Limitation [9i]

Supra [1d], [1e].

(g) **Limitation [11]**

Supra [2].

(h) **Limitation [13a,b]**

Supra [5a,b].

(i) **Limitation [15]**

Supra [8].

(j) **Claims 16, 17, and 18**

The combination of Sarantos and Mendelson-1991 renders these limitations obvious for the same reasons discussed with respect to these limitation in Ground 1A, *supra*.

(k) **Limitations [19pre], [19a], [19b], [19c]**

The combination of Sarantos and Mendelson-1991 renders these limitations obvious for the same reasons discussed with respect to these limitation in Ground 1A, *supra*.

Limitation [19d]

Supra [1c].

Limitations [19e], [19f], [19g]

The combination of Sarantos and Mendelson-1991 renders these limitations obvious for the same reasons discussed with respect to these limitation in Ground

1A, *supra*.

Limitation [19h]

Supra 1[g].

Limitation [19i]

As explained in [1c], [1f], and [1g], Sarantos discloses light blocking/enclosing walls 2274, 2374, 2474 that prevent light emitted from the light emission source from being detected by the plurality of detectors without attenuation by the tissue. APPLE-1014, FIGS. 15, 18, 22-24, 14:54-15:45, 17:1-18:35.

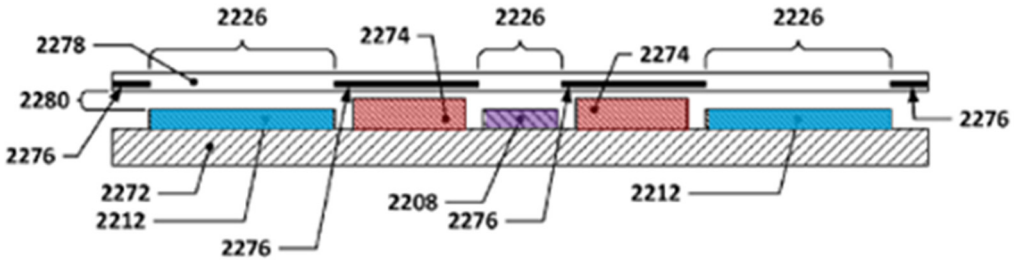

FIG. 22

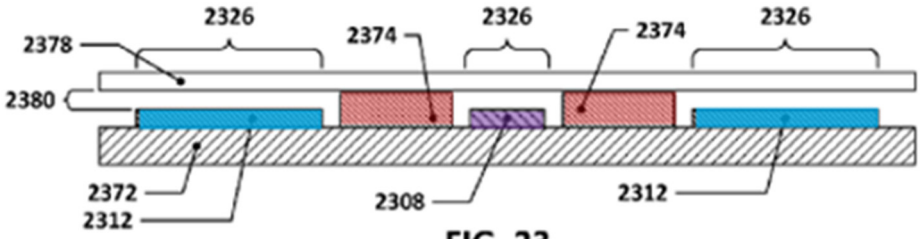

FIG. 23

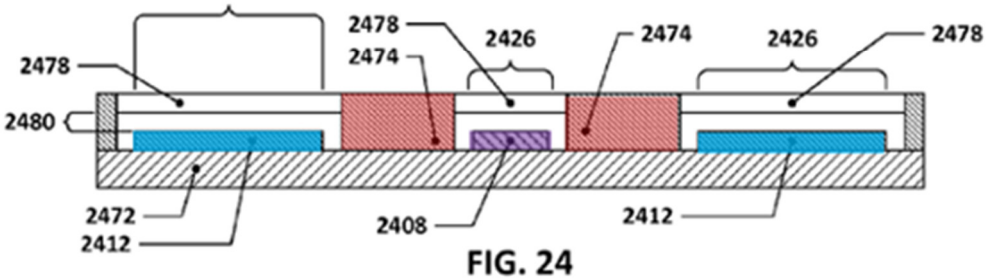

FIG. 24

Photodetectors Light source Light blocking wall

APPLE-1014, FIGS. 22 (top), 23 (center), 24 (bottom).

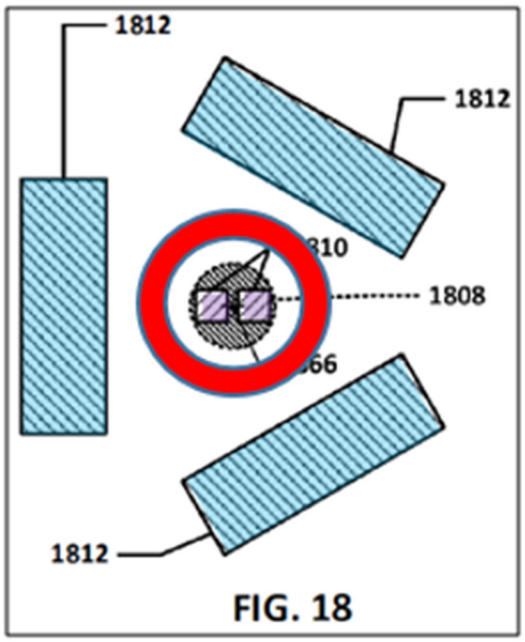

Photodetectors Light source Light blocking wall

APPLE-1014, FIG. 18 (modified to show light blocking wall)

Alternatively, as explained above in [1c] with respect to the Sarantos-Mendelson-1991 combination, Mendelson-1991's circular optical shield between the photodetectors and LED emissions sources that defines the circular portion of the tissue measurement site also prevents light emitted from the light emission source from being detected by the plurality of detectors without attenuation by the tissue. APPLE-1015, FIG. 1, pg. 2; APPLE-1003, [85].

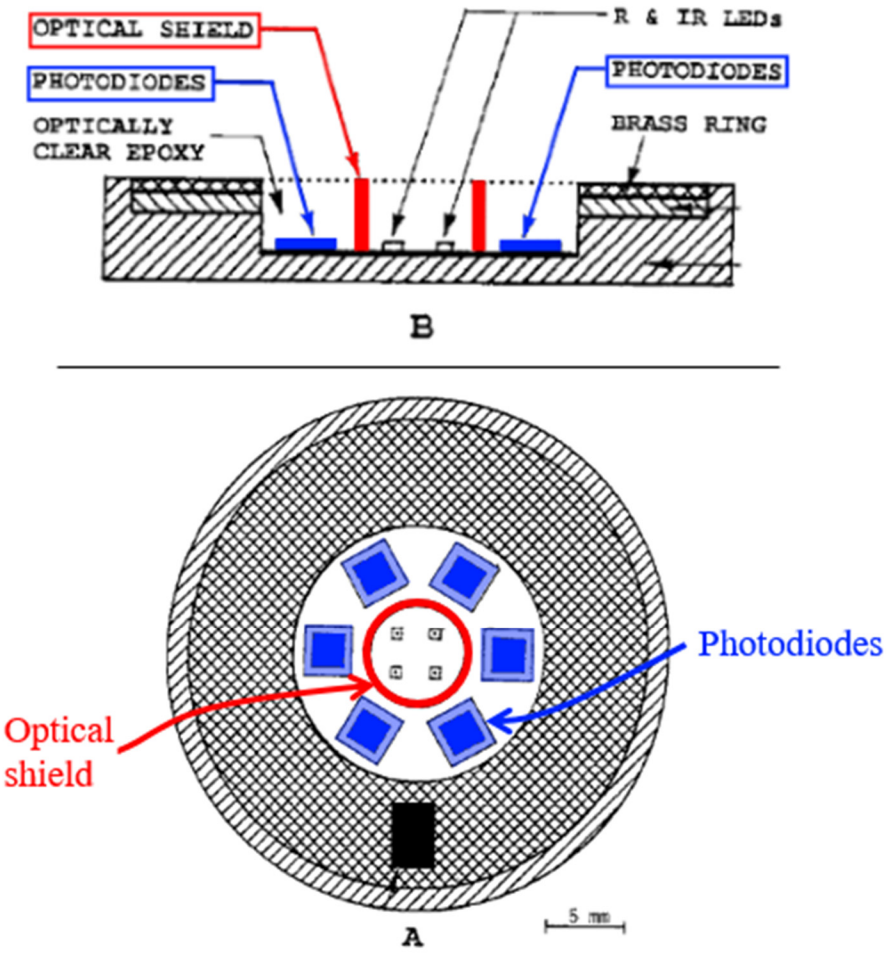

Mendelson-1991, FIG. 1B (top), FIG. 1A (bottom)

A POSITA would have understood that by preventing light from passing through, Sarantos' walls 2274, 2374, 2474 (or alternatively Mendelson-1991's optical shield) form a light isolation chamber defined by the walls 2274, 2374, 2474. APPLE-1003, [86]; *see, e.g,* APPLE-1015, FIG. 1, 2.

(l) **Limitation [22]**

Supra [2].

(m) **Limitation [24a,b]**

Supra [5a,b].

(n) **Claims 25-30**

The combination of Sarantos and Mendelson-1991 renders these limitations obvious for the same reasons discussed with respect to these limitation in Ground 1A, *supra*.

C. GROUND 1C: Claims 3, 12, and 23 are obvious based on Sarantos in view of Mendelson-1991 and Venkatraman

1. Overview of Venkatraman

Venkatraman teaches a portable biometric monitoring device with a touchscreen display that can be worn on the wrist like a watch. APPLE-1005, 12:16-21, 15:19-26, 52:23-53:18. In particular, Venkatraman describes a "biometric monitoring device[] ... adapted to be worn or carried on the body of a user ... including [an] optical heart rate monitor" designed to "be a wrist-worn or arm-mounted accessory such as a watch or bracelet." APPLE-1005, 37:29-33. Venkatraman's monitoring device is "small in size so as to be unobtrusive for the wearer" and "designed to be able to be worn without discomfort for long periods of time and to not interfere with normal daily activity." APPLE-1005, 14:28-36. Venkatraman device also includes a digital display with "uses capacitive touch detection," as shown in FIGS. 6A, 6B, and 7 below, to display data acquired or

stored locally on the wristwatch. APPLE-1005, 53:19-55:51; APPLE-1003, [87]-[89].

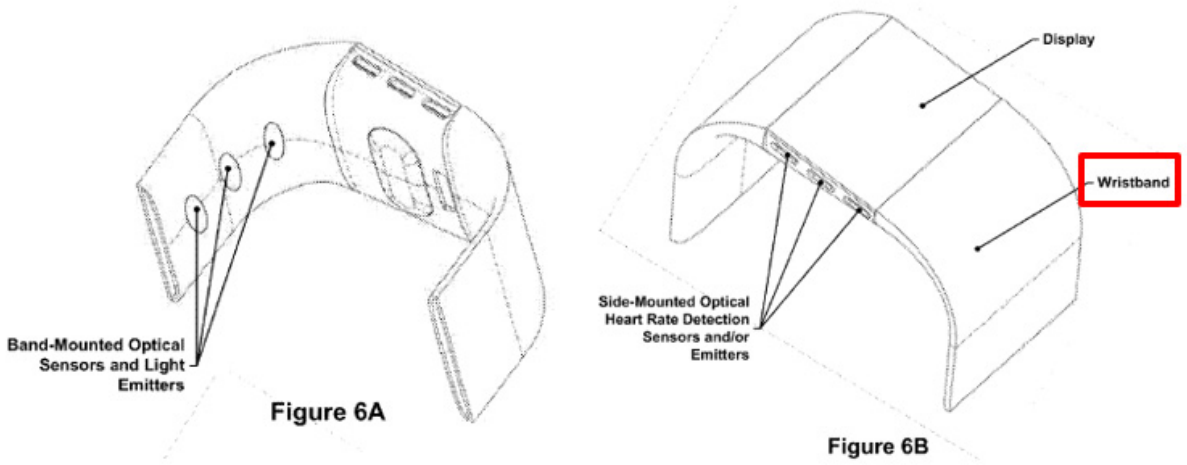

APPLE-1005, Detail of FIGS. 6A, 6B (annotated).

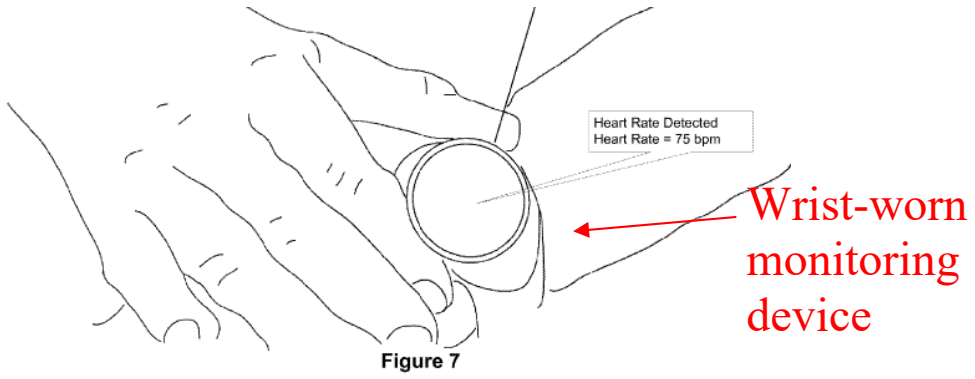

APPLE-1005, Detail of FIG. 7 (annotated).

2. The combination of Sarantos, Mendelson-1991, and Venkatraman

A POSITA would have combined the teachings of Sarantos and Mendelson-1991 with Venkatraman because doing so would have amounted to nothing more than the use of a known technique to improve similar devices in the same way and combining prior art elements according to known methods to yield predictable results. *See KSR v. Teleflex*, 550 U.S. 398, 417 (2007). APPLE-1003, [90]. Here, both the Sarantos-Mendelson-1991 device and Venkatraman's device are wrist-worn, portable biometric monitoring devices. APPLE-1014, 5:55-59, 1:6-11, 7:12-23, 6:65-7:11, FIG. 2; APPLE-1005, 12:16-21, 15:19-26, 52:23-53:18, FIGS. 6A, 6B, and 7. Implementing Venkatraman's display into the Sarantos-Mendelson-1991 device would be beneficial because a user would be able to view any measurement data through a touch screen and provide input through the touch screen. Such a display would facilitate user interaction and ease of use of Sarantos' device. APPLE-1003, [90]. The combination of Sarantos-Mendelson-1991 and Venkatraman would have been predictable and had a reasonable expectation of success as the elements of the combined system would each perform similar functions they had been known to perform prior to the combination. APPLE-1003, [90].

3. Analysis

(a) Limitations [3], [12], and [23]

As explained in Ground 1B – claim 2, *supra*, the combination of Sarantos and Mendelson-1991 renders obvious a physiological monitoring device with a display.

In the present combination, Venkatraman, like Sarantos, teaches that a portable biometric monitoring device can be wrist-worn, as shown in FIGS. 6A, 6B, and 7 (reproduced below). APPLE-1005, 12:16-21, 15:19-26, 52:23-53:18; APPLE-1003, [92].

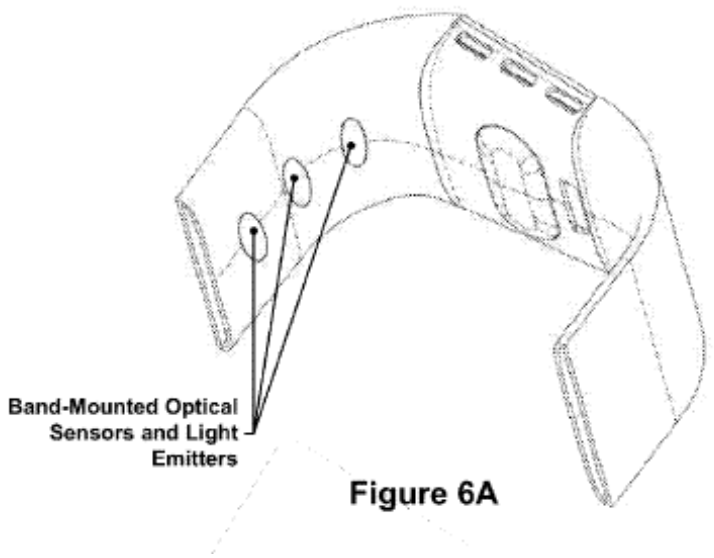

Venkatraman, FIG. 6A.

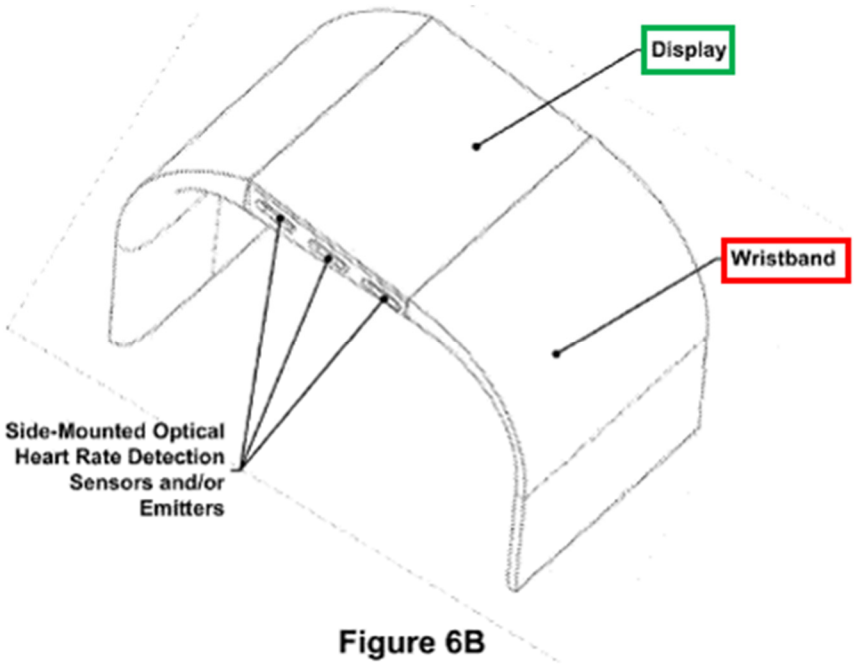

Venkatraman, FIG. 6B (annotated).

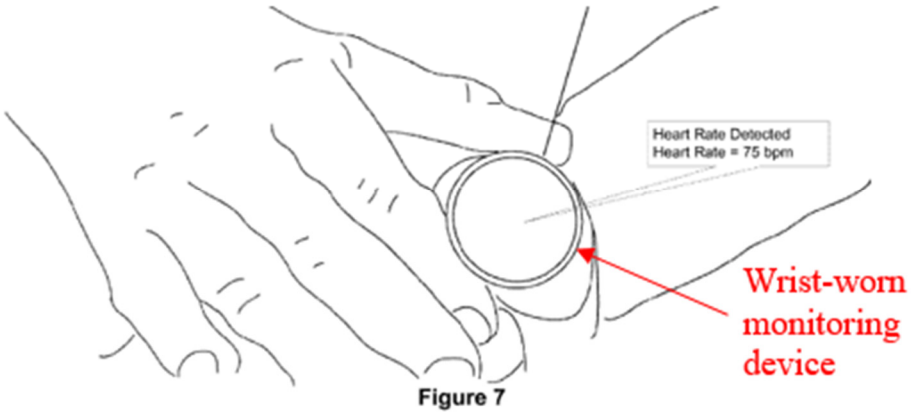

Venkatraman, FIG. 7 (annotated).

Venkatraman explains that "[b]iometric monitoring devices … are typically small in size so as to be unobtrusive for the wearer." APPLE-1005, 14:28-30. "Biometric monitoring devices are typically designed to be able to be worn without discomfort for long periods of time and to not interfere with normal daily activity."

APPLE-1005, 14:30-36. A wrist-worn biometric monitoring device provides such comfort and lack of interference and obstruction. *Id.*; APPLE-1003, [93]. Venkatraman also discloses the use of a digital display, as shown in FIG. 6B, to display data acquired or stored locally on the wristwatch. APPLE-1005, 53:19-55:51. For example, a LED may be used to display the heart rate of a user. APPLE-1005, 53:60-63.

Venkatraman also discloses that the display may include capacitive touch buttons and capacitive screen buttons. APPLE-1005, 55:29-51. "In embodiments where the screen uses capacitive touch detection, [the biometric monitoring device] may always be sampling and ready to respond to any gesture or input without an intervening event such as pushing a physical button." *Id.* As Dr. Anthony notes: "A POSITA would have understood Venkatraman's display to be a touch screen because it has capacitive touch buttons and capacitive screen buttons, thereby indicating it is a capacitive touch screen." APPLE-1003, [94] (citing APPLE-1005, 55:29-51).

D. GROUND 1D: Claims 6, 14, and 21 are obvious based on Sarantos in view of Mendelson-1991 and Chin

1. Overview of Chin

Like Mendelson-1991 and Sarantos, Chin is directed to an optical blood measurement sensor. Specifically, Chin teaches an oximeter sensor with a heating

element to improve perfusion. APPLE-1006, 1:14-17. Chin teaches the optional use of a diffusing lens in an oximetry sensor to "cause[] a further spreading or mixing of light and may enhance the amount of tissue penetrated." APPLE-1006, 8:25-29; APPLE-1003, [95].

2. The combination of Sarantos, Mendelson-1991, and Chin

It would have been obvious to a POSITA to combine Chin's diffuser with Sarantos-Mendelson-1991's physiological monitoring device to diffuse the light that is emitted from the light source emitters so that the emitted light could pass through more tissue and blood, as taught by Chin. APPLE-1006, 2:4-7, 8:25-29; APPLE-1003, [96].

In the combination, the combined pulse oximetry monitor of Sarantos and Mendelson-1991 is further modified to include Chin's diffuser between the emitters and the tissue measurement site. APPLE-1006, 2:4-7, 8:25-29; APPLE-1003, [97]. The diffuser would be placed at the bottom edge of the wall/optical shield so that light emitted from the light source emitters would be shielded from the detectors. APPLE-1003, [97]. By placing the diffuser at the bottom edge of the wall/optical shield, the light would travel within the area defined by the wall/optical shield, be received by the diffuser, and subsequently spread by the

diffuser onto the tissue measurement site. APPLE-1003, [97]. An example of this configuration is shown below.

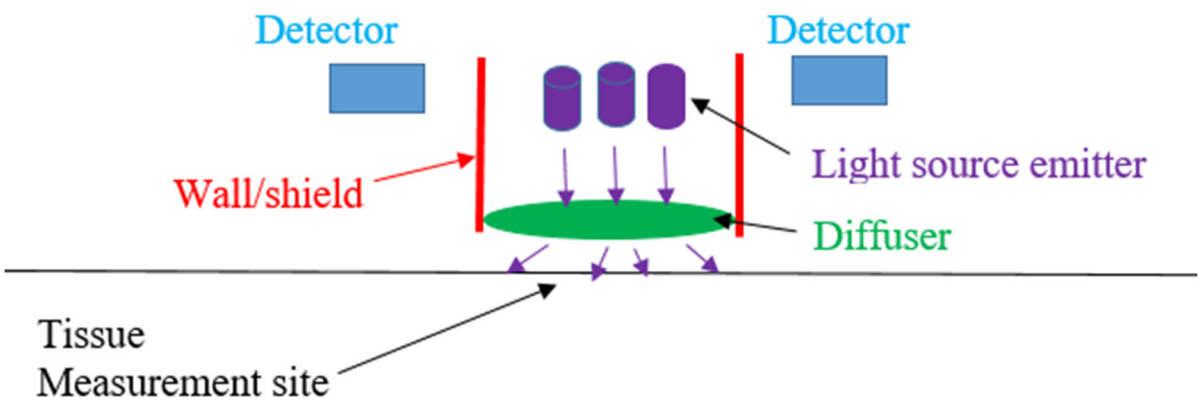

As can be appreciated from the foregoing, a POSITA would have combined the teachings of Sarantos-Mendelson-1991 and Chin because doing so would have amounted to nothing more than the use of a known technique to improve similar devices in the same way and combining prior art elements according to known methods to yield predictable results. *See KSR v. Teleflex*, 550 U.S. 398, 417 (2007). APPLE-1003, [98]. And because a POSITA would be implementing the diffuser in a known way (specifically the way described in Chin), a POSITA would have had a reasonable expectation of success in integrating the diffuser of Chin into the pulse oximetry sensor of the Sarantos-Mendelson-1991 combination. APPLE-1003, [98]; *see, e.g.,* APPLE-1006, 8:20-28.

In addition, a POSITA would have been motivated to incorporate Chin's diffuser into the pulse oximeter of Sarantos and Mendelson because the diffuser

will cause the light "to pass through more tissue, and thus more blood," resulting in a stronger reflected signal at the detectors, which "allows it to be more easily processed by the oximeter electronics and software" to determine the measured physiological parameters. APPLE-1006, 2:4-7, 8:25-29, 9:64-10:7; APPLE-1003, [99].

3. Analysis

(a) Limitations [6], [14], and [21]

Neither Sarantos nor Mendelson-1991 disclose a diffuser. However, using a diffuser to spread emitted light was well-known in the art as evidenced by Chin.

Chin is directed to an oximeter sensor with a heating element to improve perfusion. APPLE-1006, 1:14-17. Chin discloses that "[o]ne type of Oximeter Sensor will add a diffusing optic to diffuse the light emitted from the light-emitting diodes (LEDs) to cause it to pass through more tissue, and thus more blood," resulting in a stronger reflected signal at the detectors, which "allows it to be more easily processed by the oximeter electronics and software" to determine the measured physiological parameters. APPLE-1006, 2:4-7, 8:25-29, 9:64-10:7; APPLE-1003, [101].

E. GROUND 2A: Claims 1, 4, 5, 8, 9, 13, 15-17, 19, 24-26, 28, and 29 are obvious based on Ackermans

1. Overview of Ackermans

Ackermans describes an optical sensor 10 for measuring the blood oxygenation levels of a user. APPLE-1016, Abstract, 1, 2-5. As shown in FIGS. 1 and 2 below, the optical sensor 10 includes "at least one light emitter (20) for emitting light (21) directed to a part of the skin (50) of a patient and at least one photo-detector (30) for detecting light (31) reflected from the skin (50). A housing (40) for carrying the at least one light emitter (20) and the at least one photo-detector (30) is provided, where the housing (40) has a contact area with the skin (50)." APPLE-1016, Abstract, 4:22-25.

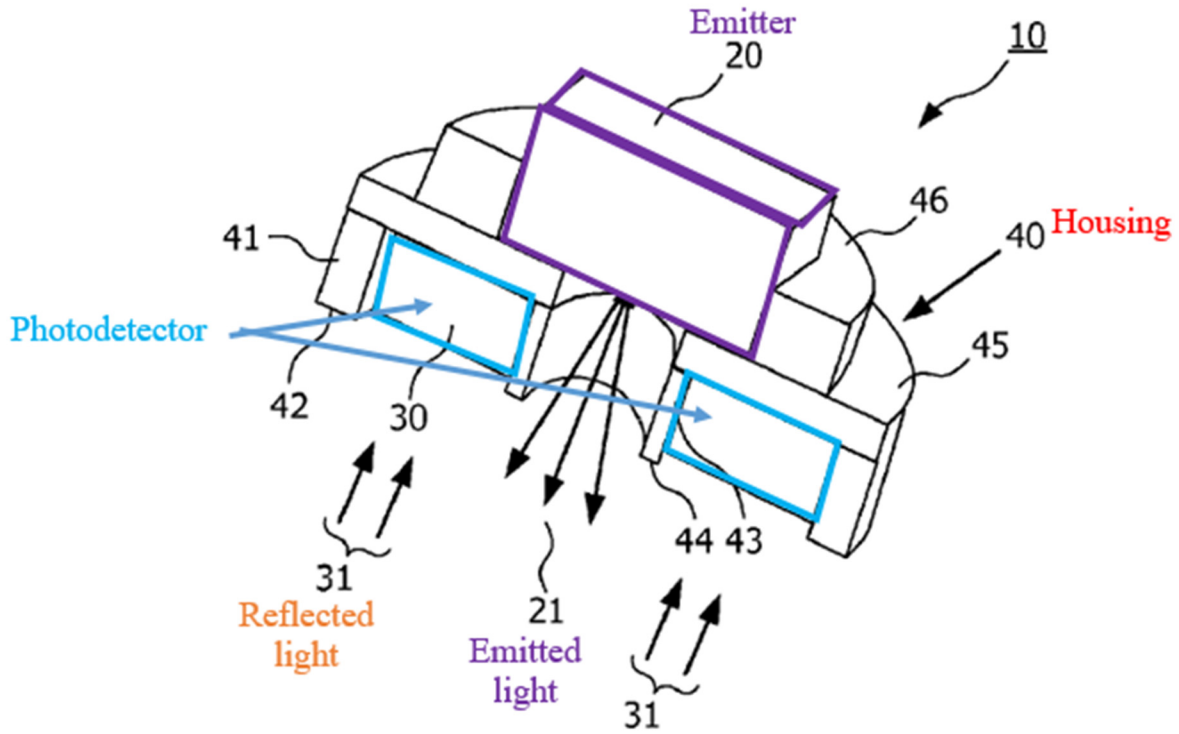

APPLE-1016, FIG. 1 (annotated)

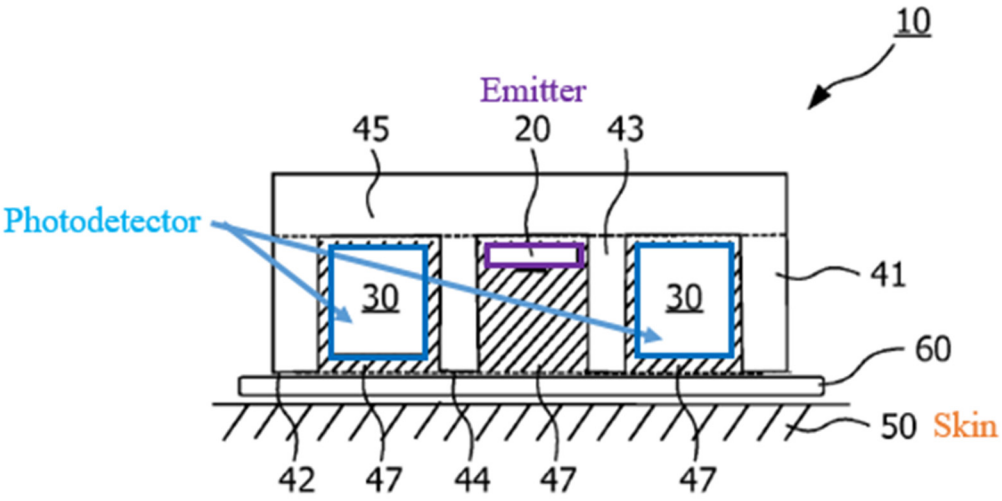

APPLE-1016, FIG. 2 (annotated)

In the example shown in FIG. 7, Ackermans' optical sensor 10 is implemented within a wristwatch for placement on a user at a tissue measurement site. APPLE-1016, 10:29-35.

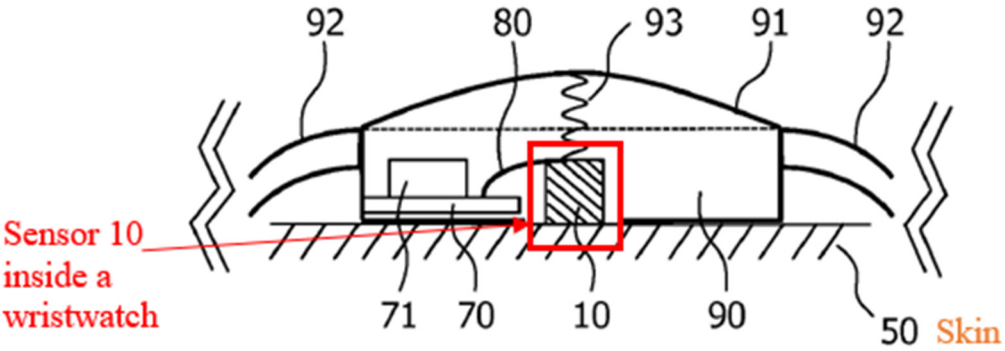

FIG. 7

APPLE-1016, FIG. 7 (annotated)

The frame 90 of the wristwatch is attachable to the skin 50 of a patient with an elastic band. APPLE-1016, 10:29-35. The "optical sensor 10 is positioned at the center of the frame" 90. *Id*. Sensor 10 can be used to obtain physiological measurements such as blood oxygen levels (e.g., arterial oxygen saturation levels) and heart rates. APPLE-1016, 6:15-18, 1:8-18, 13:10-12 (claim 6). "Electrical signals from the at least one photo-detector are processed [by electrical elements] in order to determine an oximetry value." *Id.*, 3:10-12, 8:25-9:2, 10:3-10; APPLE-1003, [104].

2. Analysis

(a) Claim 1

Limitation [1pre]

Ackermans describes an optical sensor 10 for measuring the blood oxygenation levels of a user. APPLE-1016, Abstract, 1, 2-5. As shown in FIGS. 1 and 2 below, the optical sensor 10 includes "at least one light emitter (20) for emitting light (21) directed to a part of the skin (50) of a patient and at least one photo-detector (30) for detecting light (31) reflected from the skin (50). A housing (40) for carrying the at least one light emitter (20) and the at least one photo-detector (30) is provided, where the housing (40) has a contact area with the skin (50)." APPLE-1016, Abstract, 4:22-25; APPLE-1003, [105].

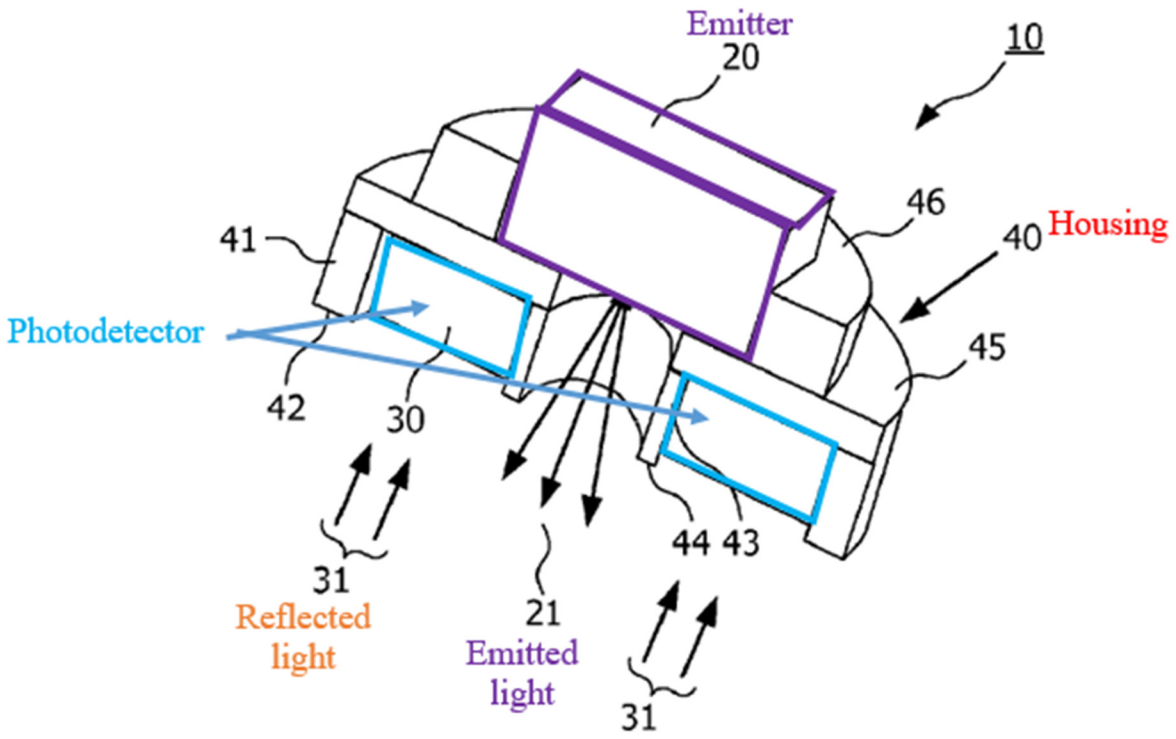

APPLE-1016, FIG. 1 (annotated)

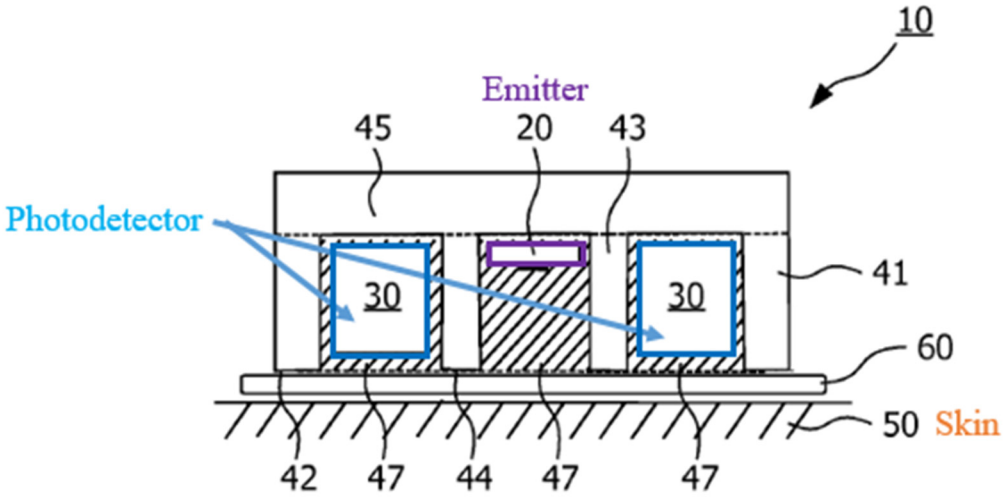

APPLE-1016, FIG. 2 (annotated)

In the example shown in FIG. 7, Ackermans' optical sensor 10 is implemented within a wristwatch for placement on a user at a tissue measurement

site. APPLE-1016, 10:29-35; APPLE-1003, [106].

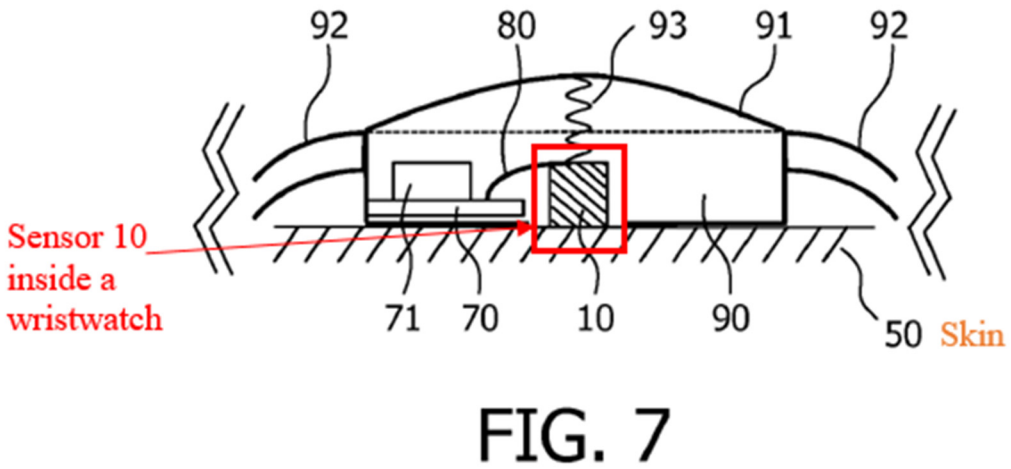

APPLE-1016, FIG. 7 (annotated)

The frame 90 of the wristwatch is attachable to the skin 50 of a patient with an elastic band. APPLE-1016, 10:29-35. The "optical sensor 10 is positioned at the center of the frame" 90. *Id*. Sensor 10 can be used to obtain physiological measurements such as blood oxygen levels (e.g., arterial oxygen saturation levels) and heart rates. APPLE-1016, 6:15-18, 1:8-18, 13:10-12 (claim 6). "Electrical signals from the at least one photo-detector are processed [by electrical elements] in order to determine an oximetry value." *Id.*, 3:10-12, 8:25-9:2, 10:3-10; APPLE-1003, [107].

Accordingly, Ackermans renders obvious "a wrist-worn physiological monitoring device configured for placement on a user at a tissue measurement site."

Limitation [1a]

As explained above with respect to [1pre], Ackermans describes an optical sensor 10 that includes "at least one light emitter (20) for emitting light (21) directed to a part of the skin (50) of a patient and at least one photo- detector (30) for detecting light (31) reflected from the skin (50)." APPLE-1016, Abstract, 4:22-25; APPLE-1003, [108].

In more detail, Ackermans' optical sensor 10 includes a light emission source (emitter 20 with housing 46) comprising a plurality of emitters in the form of LEDs that emit light at different wavelengths. APPLE-1016, 6:1-8. These LEDs are configured to irradiate the tissue measurement site by emitting light 21 towards the tissue measurement site as shown in FIGS. 1, 3A, and 3B. *Id.*, 6:1-8. Ackermans explains that emitted light enters the skin and photodetectors detect light that reflects back from the skin. *Id.*, 2:15-23, 6:1-8, 7:5-10, Abstract; APPLE-1003, [109].

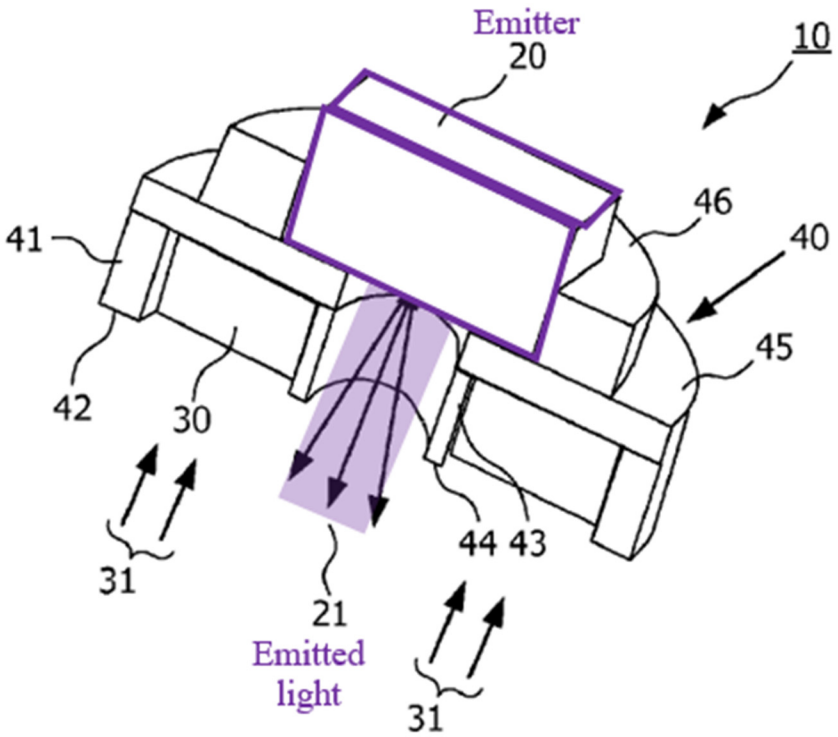

APPLE-1016, FIG. 1 (annotated).

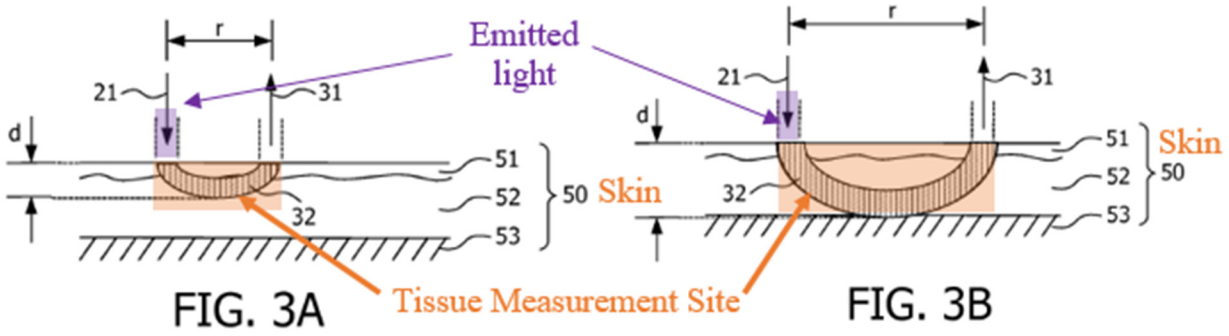

APPLE-1016, FIGS. 3A, 3B (depicting the tissue measurement site and reflection therefrom).

Limitation [1b]

As explained above with respect to [1pre], Ackermans discloses that its optical sensor 10 is implemented as part of a wristwatch that is "attachable to the skin 50 of a patient with an elastic band 92, for example an arm wrist." APPLE-

1016, 10:29-35. Accordingly, in Ackermans, the tissue measurement site is located on a wrist of the user. APPLE-1003, [110].

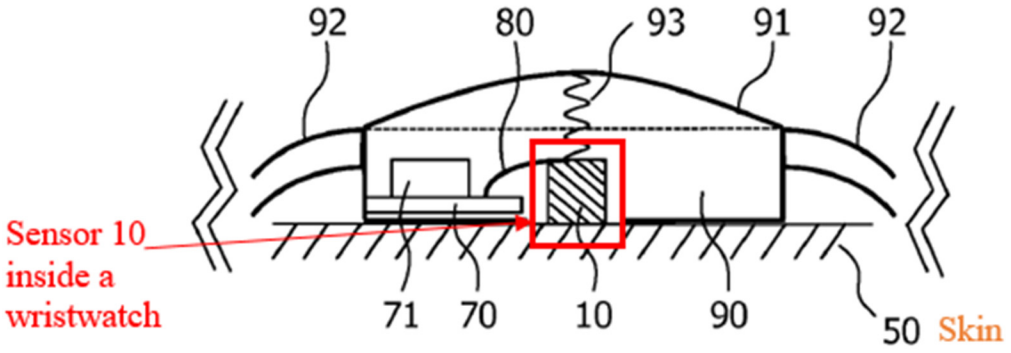

FIG. 7

APPLE-1016, FIG. 7 (annotated)

Furthermore, as explained above in [1pre], [1a], the LED emitters emit light at different wavelengths, e.g., around 660 nm and 940 nm. APPLE-1016, 6:1-18; APPLE-1003, [111].

Limitation [1c]

As explained above with respect to [1pre] and shown below in FIG. 1, Ackermans discloses at least one photo-detector (30) for detecting light (31) reflected from the skin (50). APPLE-1016, Abstract, 2:15-23, 4:22-25. "The [at least one] photo-detector 30 is circular in shape and mounted in the circular groove formed by the base plate 45, the outer ring 41 and the inner ring 42." *Id*. In some implementations, a plurality of detectors can be implemented as "small

photodiodes that are arranged between the inner ring 43 and the outer ring 41." *Id.*, 6:9-15. As noted in [1a], light emitted by the plurality of emitters enters the skin, is attenuated, reflects back from the skin, and is subsequently detected by the photodetectors. *Id.*, 2:15-23, 6:1-8, 7:5-10, Abstract; FIGS. 3A, 3B; APPLE-1003, [112]. Accordingly, Ackermans discloses "a plurality of detectors configured to detect the light emitted by the plurality of emitters after attenuation by … the tissue measurement site."

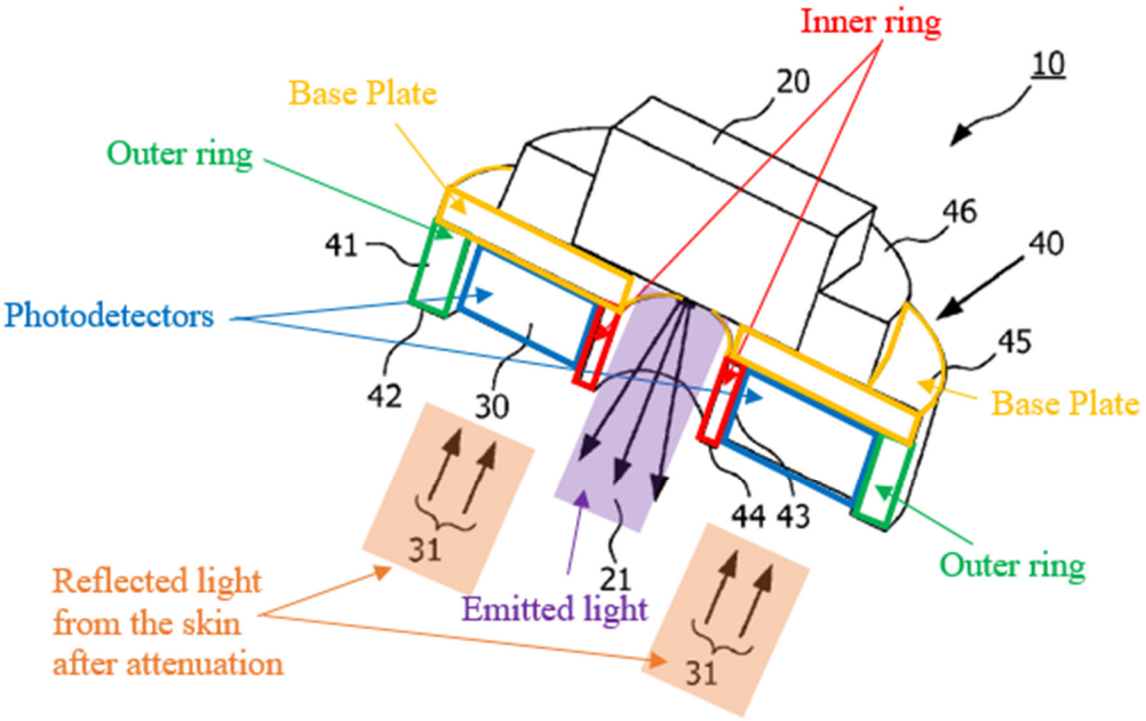

APPLE-1016, FIG. 1 (annotated)

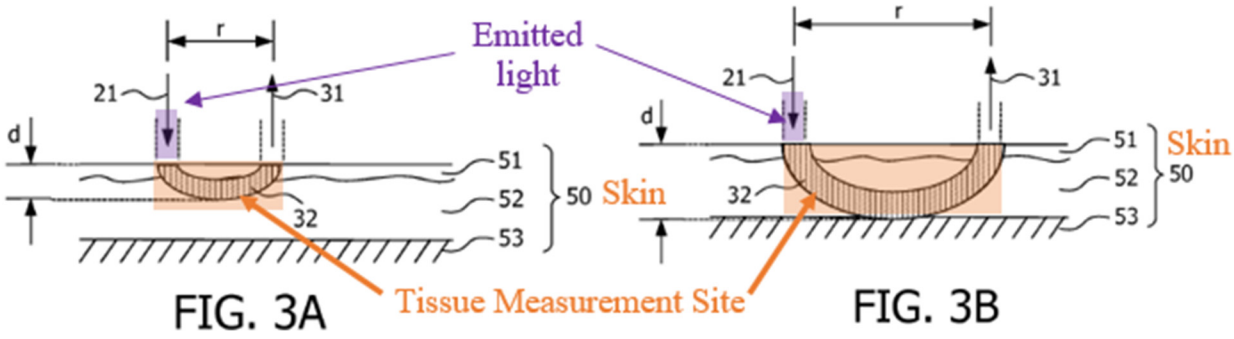

APPLE-1016, FIGS. 3A, 3B (depicting the tissue measurement site and reflection therefrom).

Feature [1c] also requires the attenuation to be "by a circular portion of the tissue measurement site." As previously discussed in Ground 1A, the'695 Patent explains that a "diffuser" can be used to define the shape of a surface area onto which light is distributed. '695 Patent, 3:1-10 ("the diffuser is further configured to define a surface area shape by which the emitted spread light is distributed onto a surface of the tissue measurement site. The defined surface area shape can include … a shape that is substantially … circular, oval, or annular, among others").

Claim 1 however does not require a diffuser but [1g] does require that "the light block defin[es] the circular portion of the tissue measurement site." As is explained above in [1pre] and in more detail below with respect to feature [1g], the inner ring 43 "shadows the photodetector 30 from emitted light 21" and operates as a light block that prevents light from the emitters 20 from being detected directly by the photodetectors 30 without attenuation by the user's skin. *Id.*, 5:10-15, 6:31-35; APPLE-1003, [114].

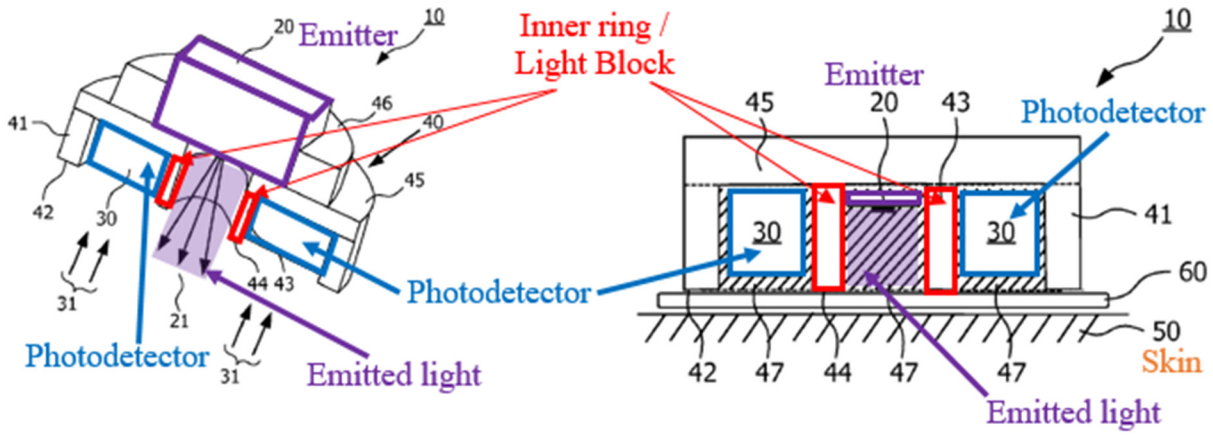

APPLE-1016, FIGS. 1 (left), 2(right) (annotated).

Based at least on the configuration shown in Ackerman's FIGS. 1 and 2 and the inner ring 43's function to block direct light from the emitter 20 to the detectors 30 (without attenuation by the tissue measurement site), a POSITA would have understood that the inner ring 43 effectively guides the light emitted by light source 12 on to the tissue measurement site. APPLE-1003, [115]. This creates at least an initial circular region in the tissue measurement site because inner ring 43 itself is circular. APPLE-1003, [115]. In describing the tissue measurement site, Ackermans' claim 2 explicitly recites that "the inner ring (43) having a rim (44) [ ] defines the perimeter of [a] central part of [the] contact area" with the skin. APPLE-1016, 12:5-22; APPLE-1003, [115].

And even after scattering within the tissue measurement site, the tissue measurement site has a circular shape. APPLE-1016, 5:1-4 ("emitted light 1 is directed onto the skin and partly penetrates into the skin where it interacts with the

skin tissue and in particular with blood vessels contained in the skin. A part of the light leaves the tissue again after one or more scattering events and enters the photo-detector 30 as the reflected light"); 31.5:6-10 ("the area through ***which the light leaves the skin is essentially circular in shape***"). For at least this reason, it would have been obvious to a POSITA that the circular shape/area of the inner ring 43 in Ackermans renders or results in a "circular portion of the tissue measurement site" (from which subsequent scattering and reflection occurs). APPLE-1003, [116]. The detectors 30 detect the light after attenuation by this circular portion of the tissue measurement site. For at least this reason, Ackermans discloses or renders this limitation obvious.

Alternatively, Ackermans also discloses using a sensor unit 100 formed by a matrix of sensors 10, as shown in FIG. 4 below. APPLE-1016, 7:29-34. The sensors 10 can be arranged in different configurations, including, for example, circular. *Id.*, 8:22-24; APPLE-1003, [117]. The sensors 10 in the sensor unit 100 have a light emitter and photo-detector and a circular contact area with the skin. *Id.*, 8:12-21. Accordingly, even collectively when a sensor unit 100 with multiple sensors 10 are used, a POSITA would have understood that light is emitted from a plurality of emitters, attenuated by a circular region of the tissue measurement site, and detected by a plurality of detectors. APPLE-1003, [117] (citing APPLE-1016, 7:29-34, 8:12-24). For this additional reason, Ackermans renders [1c] obvious.

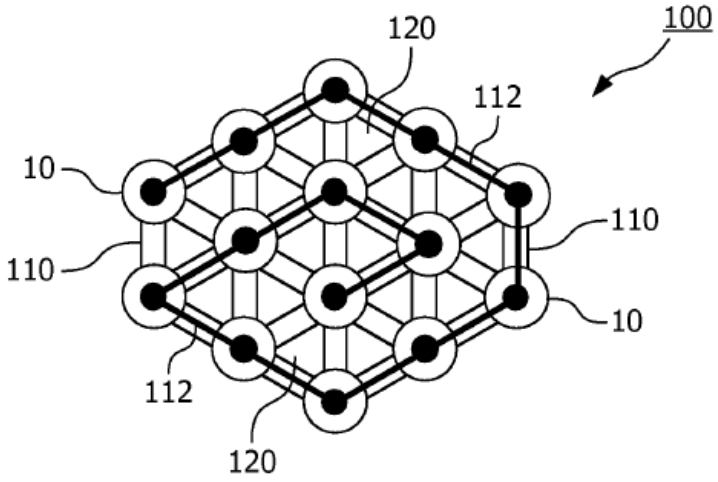

FIG. 4

APPLE-1016, FIG. 4

Limitation [1d]

As explained above with respect to [1pre], [1c], after detecting the reflected and attenuated light, the detectors output electrical signals so that an oximetry value can be determined. *Id.*, 3:10-12, 8:25-9:2, 10:3-10.

Limitation [1e]

As explained above with respect to [1pre], [1c], and [1d], the photodetectors output electrical signals so that an oximetry value can be determined. APPLE-1016, 3:10-12, 8:25-9:2, 10:3-10. Ackermans explains that electrical elements such as an integrated circuit are used to process signals received from the photodetector to determine physiological parameter values (e.g., oximetry values). *Id.*, 1:27-29, 14:23-25 (claim 14), 3:8-12, 10:3-10. In the sensor unit 100

embodiment in which an array of sensors 10 is used, signals "derived by the different photodetectors" are averaged, and "a weighting factor could additionally be used to account for the signal quality of the individual single signals. In this way well-positioned photo -detectors that provide a signal with a high signal-to-noise ratio are preferred over less well-positioned sensors 10 that only provide a signal with a low signal-to-noise ratio." *Id.*, 8:25-9:2; APPLE-1003, [119].

Because an integrated circuit or electrical element that performs processing of a signal would have been understood by a POSITA to be a processor, it would have been obvious to a POSITA that Ackermans teaches a processor configured to receive a signal responsive to the output by the detectors and determine a physiological parameter (oximetry value) of the user. APPLE-1003, [120] (citing APPLE-1016, 1:27-29, 14:23-25 (claim 14), 3:8-12, 8:25-9:2, 10:3-10).

Limitation [1f]

As explained above with respect to [1pre], [1c], Ackermans' inner ring 43 "shadows the photodetector 30 from emitted light 21" and operates as a light block that prevents light from the emitters 20 from being detected directly by the photodetectors 30 without attenuation by the user's skin. APPLE-1016, 5:10-15. APPLE-1003, [121].

In more detail, Ackermans' inner ring 43 includes rim 44. *Id.*, 4:25. As

shown in FIGS. 1 and 2 below, A POSITA would have understood that the inner ring 43 and its rim 44 form a wall between the emitter 20 (light emission source) and the plurality of detectors 30. *Id.,* 4:22-32, 6:22-31; APPLE-1003, [122]. "Both the light emitter 20 and the photo-detector 30 are mounted recessed from the plane defined by the rims 42 and 44. ***As a result, the inner ring 43 prevents light emitted by the light emitter 20 from shining directly into the photo–detector 30***." *Id.*, 6:31-35.

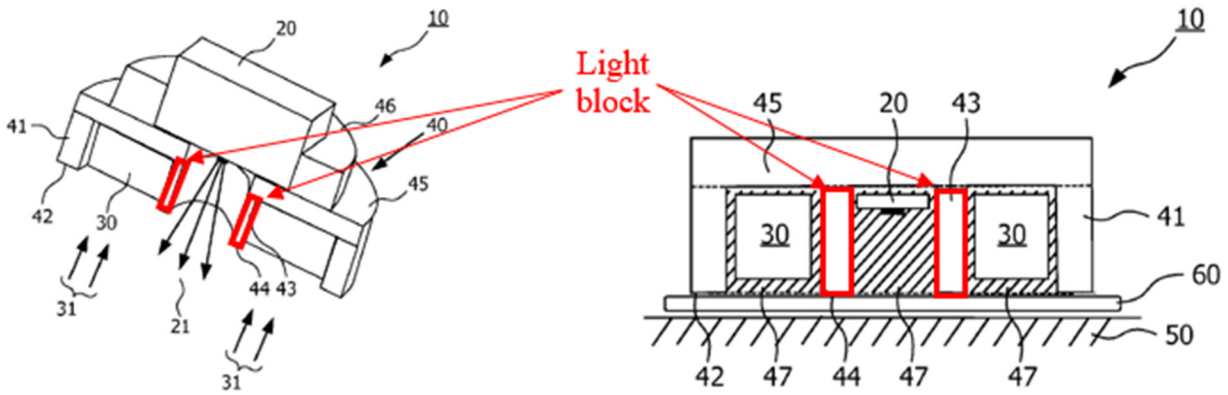

APPLE-1016, FIGS. 1 (left) and 2 (right), (annotated).

Limitation [1g]

As explained above with respect to [1pre], [1c], Ackermans' inner ring 43 operates as a light block that prevents light from the emitters 20 to be detected directly by the photodetectors 30 without attenuation by the user's skin. *Id.*, 5:10-15, 6:31-35. In addition, for the reasons explained above in [1c], it would have been obvious to a POSITA that the circular shape/area of Ackermans' inner ring 43 results in a circular portion of the tissue measurement site being irradiated with the

emitted light. APPLE-1016, 5:1-4, 12:5-22; APPLE-1003, [123]. This circular portion corresponds to the claimed "circular portion of the tissue measurement site." APPLE-1003, [123].

Furthermore, as shown below in Ackermans' FIG. 2, the light emission source (emitters 20) is arranged proximate a first side of the enclosing wall (inner ring 43) and the plurality of detectors 30 are arranged proximate a second side of the enclosing wall (inner ring 43) when the first side is different than the second side. APPLE-1003, [124]. As explained in [1f], the inner ring 43 prevents at least a portion of light emitted from the light emission source (emitters 20) from being detected by the plurality of detectors 30 without attenuation by the tissue. APPLE-1016, 6:31-35 ("the inner ring 43 prevents light emitted by the light emitter 20 from shining directly into the photo–detector 30"). Light emitted by the plurality of emitters enters the skin, is attenuated, reflects back from the skin, and is subsequently detected by the photodetectors. *Id.*, 2:15-23, 6:1-8, 7:5-10, Abstract; FIGS. 3A, 3B.

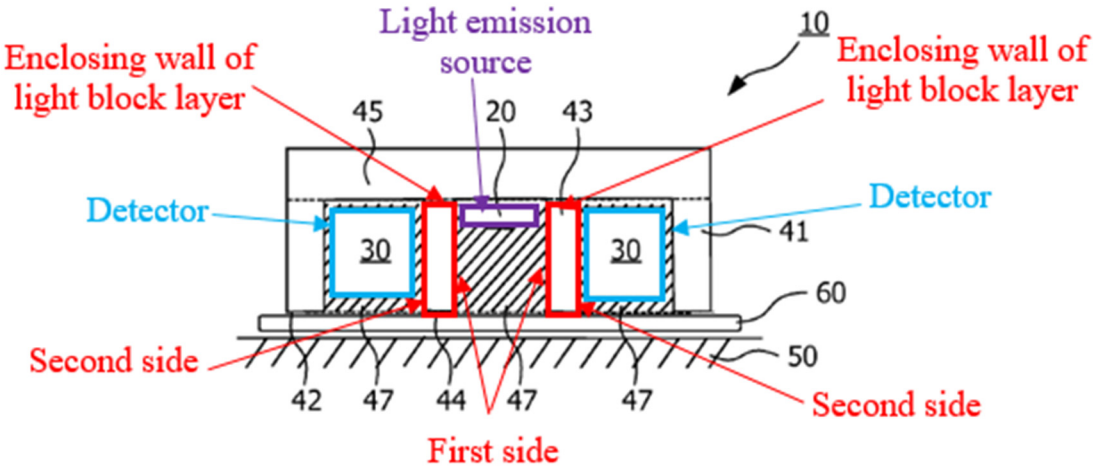

APPLE-1016, FIG. 2 (annotated).

Limitation [1h]

As explained above in [1c], in some implementations, a plurality of detectors can be implemented as "small photodiodes that are arranged between the inner ring 43 and the outer ring 41." APPLE-1016, 6:9-15. Because the detectors 30 are arranged between two rings, a POSITA would have understood that detectors are arranged in an array having a circular spatial configuration. APPLE-1003, [125]; *see, e.g.,* APPLE-1016, 6:9-15. And because this array is shaped by the inner ring 43, it also corresponds to the circular portion of the tissue measurement site. In particular, as explained above in [1c], the inner ring 43 yields a "circular portion of the tissue measurement site" because light from the emitters can only fall within this circular area (from which subsequent scattering and reflection occurs). APPLE-1003, [125].

Alternatively, Ackermans also discloses using a sensor unit 100 formed by a matrix of sensors 10, as shown in FIG. 4 below. APPLE-1016, 7:29-34. The sensors 10 can be arranged in different configurations, including, for example, circular. *Id.*, 8:22-24; APPLE-1003, [126]. A POSITA would have understood that when the sensors 10 in the sensor unit 100 are arranged in a circular configuration, the plurality of detectors in the sensors 10 would also have been arranged in a circular configuration. APPLE-1003, [126].

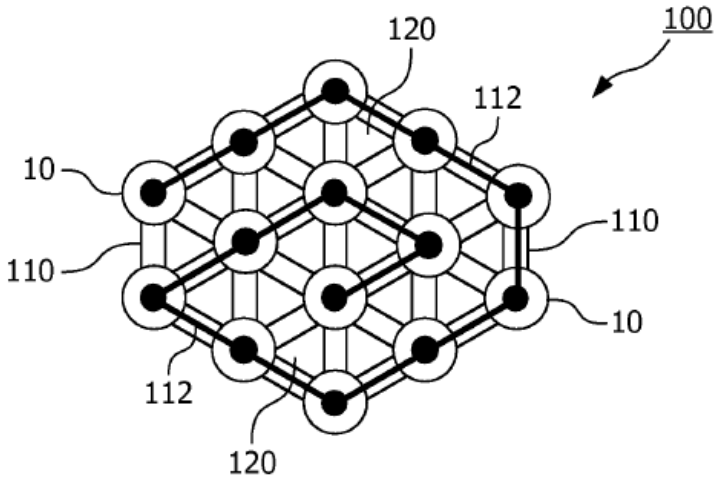

FIG. 4

APPLE-1016, FIG. 4

A POSITA would have understood that the collective emission of light from the sensors 10 arranged in a circular arrangement would have created a "circular portion of the tissue measurement site." APPLE-1003, [127]; *see, e.g.,* APPLE-

1016, 7:29-34, 8:22-24, FIG. 4.

(b) **Limitation [4]**

As explained above in [1f], Ackermans' inner ring 43 is a circular enclosing wall between the emitter 20 (light emission source) and the plurality of detectors 30. *Id.*, 4:22-32, 6:22-31; APPLE-1003, [128]. Although the embodiment in FIG. 1 below has a slightly different configuration from FIG. 2 (in that the emitter 20 is placed directly between the inner ring 43 in FIG. 2 compared to being between but slightly above the detectors 30 in FIG. 1), when viewed together, a POSITA would appreciate that FIGS. 1 and 2 depict a light block in Ackermans is circular (if not evident from its name – inner ***ring*** 43). APPLE-1003, [128].

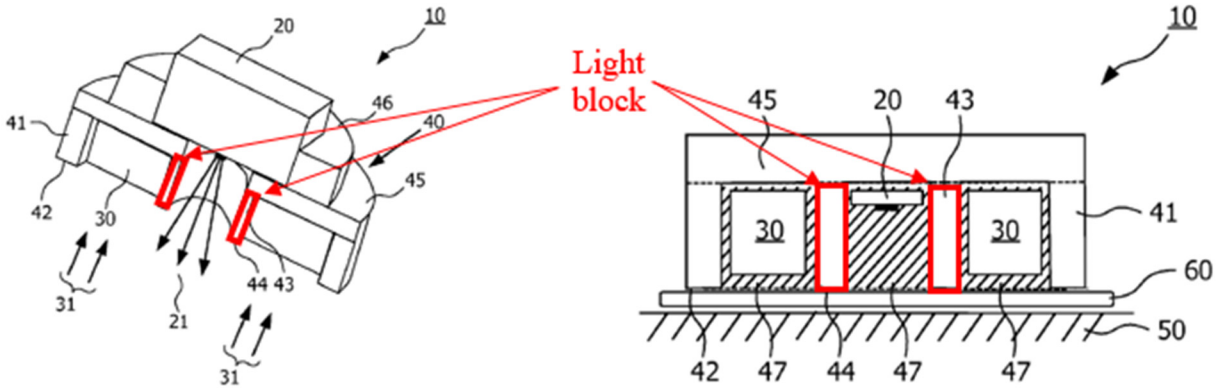

APPLE-1016, FIGS. 1 (left) and 2 (right), (annotated).

The inner ring 43 encloses emitter 20, as shown in FIG. 2. APPLE-1016, 4:22-32, 6:22-31; APPLE-1003, [129].

(c) Claim 5

Limitation [5a]

As explained above in [1pre], in one of the embodiments shown in FIG. 7, Ackermans' optical sensor 10 is implemented within a wristwatch for placement on a user at a tissue measurement site. APPLE-1016, 10:29-35; APPLE-1003, [130].

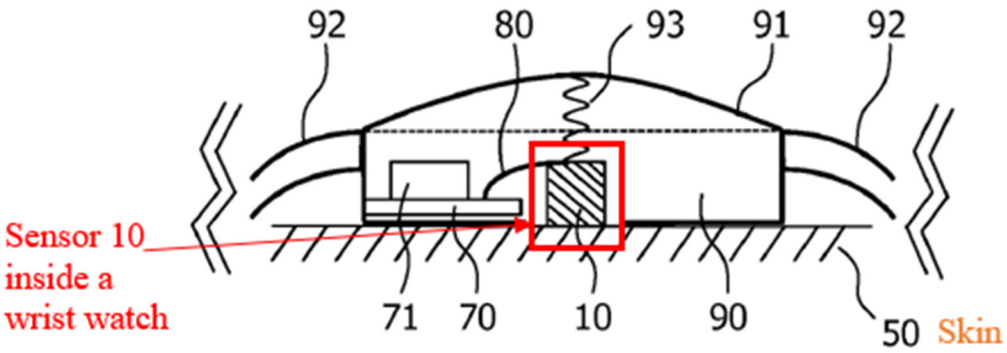

FIG. 7

APPLE-1016, FIG. 7 (annotated).

Ackermans explains that a transmission pulse oximeter measurement configuration occurs when a light emitter and photo-detector are on opposite sides of skin tissue, and that a reflection pulse oximeter measurement configuration occurs when a light emitter and photo-detector are adjacent to each other on the same side of skin tissue. APPLE-1016, 1:18-23; APPLE-1003, [131].

Consistent with this characterization of a reflectance measurement configuration, the configuration depicted in FIG. 7 (which includes emitters and

detectors in sensor 10 on the same side of the tissue measurement site) would have been understood by a POSITA as being a reflectance measurement configuration. APPLE-1003, [132]; *see, e.g.* APPLE-1016, 2:15-23 ("a medical optical sensor comprises … at least one photo-detector for detecting light **reflected from the skin**"), 3:8-12 ("light is then **reflected by the patient's skin** and received by at least one photo-detector"), 4:22-25, 2:15-23, 5:2-15, 6:1-8, 7:5-28, FIGS. 3A, 3B.

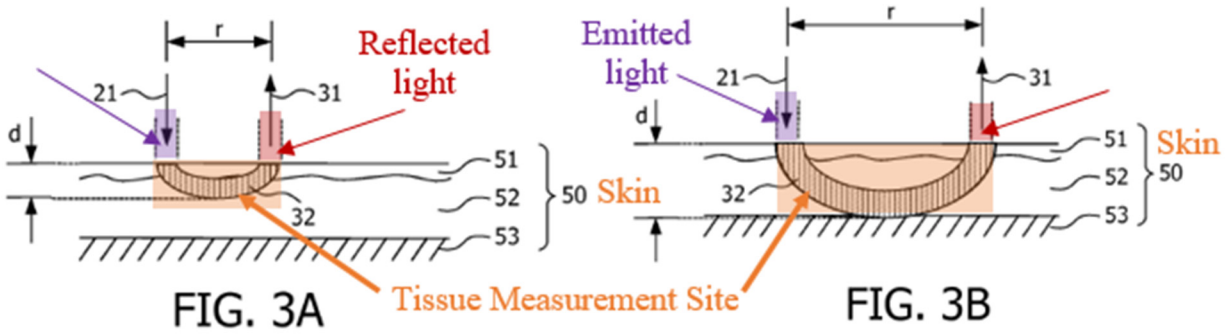

APPLE-1016, FIGS. 3A (left), 3B (right) (annotated and depicting a reflection measurement).

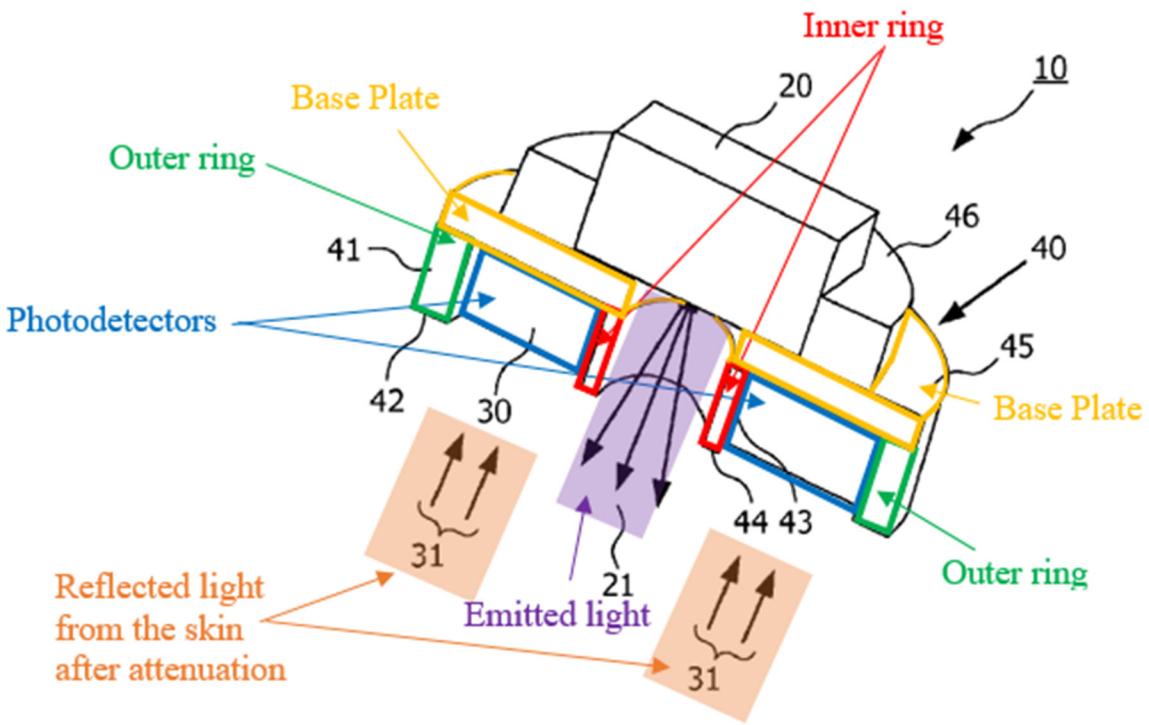

APPLE-1016, FIG. 1 (annotated and showing reflected light 31, and emitter 20 and detector 30 on the same side of the tissue measurement site).

Limitation [5b]

As explained above in [5a], Ackermans' detectors 30 are arranged on the same side as the emitter 20 in a reflectance measurement configuration on the first side of the tissue measurement site when the physiological monitoring device is worn by the user. APPLE-1016, 10:29-35, 1:18-23, 2:15-23, 4:22-25, 5:2-15, 6:1-8, 7:5-28, FIGS. 1, 3A, 3B; APPLE-1003, [133].

(d) **Limitation [8]**

As explained in [1pre], the sensor 10 can be used to obtain physiological parameters such as arterial oxygen saturation levels and heart rates. APPLE-1016,

6:15-18 ("[a] typical application of the shown optical medical sensor 10 could be the measurement of the oxygenation level of blood in a pulse oximeter"), 1:8-18 ("[t]he non-invasive measurement of the oxygen saturation in arterial blood, also called pulse oximetry, is an application of optical medical sensors of particular importance"), 13:10-12 (claim 6) ("determining the arterial oxygen saturation and/or heart rate in a pulse oximeter"); APPLE-1003, [134].

(e) **Claim 9**

Limitation [9pre]

As explained in [1pre], Ackermans' sensor is configured to implement a method of measuring a physiological parameter in a user's blood. APPLE-1016, 1:4-5; 2:13-15, 3:8-12, 14:16-25, 6:15-18, 1:8-18; APPLE-1003, [135].

Limitation [9a]

As explained in [1pre], [1a], [1b], Ackermans discloses that its optical sensor 10 is implemented as part of a wristwatch that is "attachable to the skin 50 of a patient with an elastic band 92, for example an arm wrist." APPLE-1016, 10:29-35. Accordingly, in Ackermans, the tissue measurement site is located on a wrist of the user. APPLE-1003, [136]. The optical sensor 10 includes "at least one light emitter (20) for emitting light (21) directed to a part of the skin (50) of a patient and at least one photo- detector (30) for detecting light (31) reflected from the skin (50)." APPLE-1016, Abstract, 4:22-25.

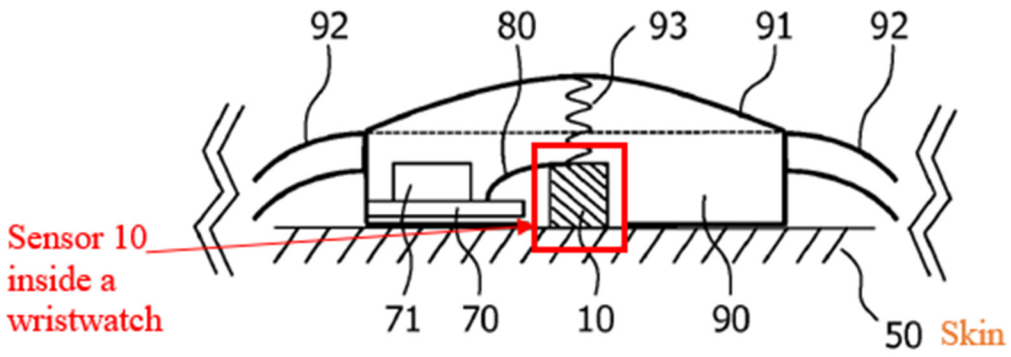

FIG. 7

APPLE-1016, FIG. 7 (annotated).

In more detail, Ackermans' optical sensor 10 includes a light emission source (emitter 20 with housing 46) comprising a plurality of emitters in the form of LEDs that emit light at different wavelengths, e.g., around 660 nm and 940 nm. APPLE-1016, 6:1-8. These LEDs are configured to irradiate the tissue measurement site by emitting light 21 towards the tissue measurement site as shown in FIGS. 1, 3A, and 3B. *Id.*, 6:1-8. Ackermans explains that emitted light enters the skin and photodetectors detect light that reflects back from the skin. *Id.*, 2:15-23, 6:1-8, 7:5-10, Abstract; APPLE-1003, [137].

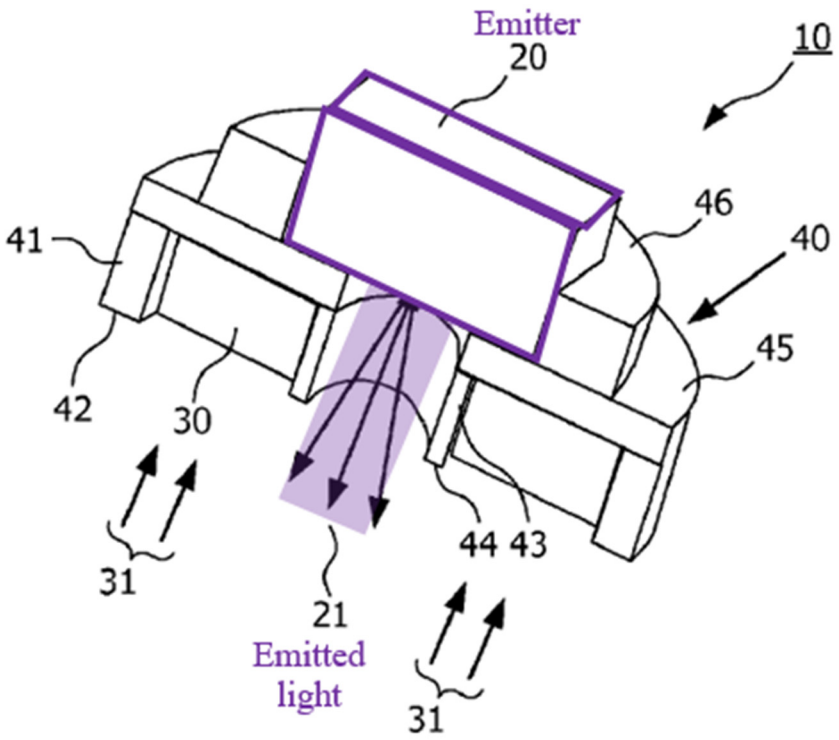

APPLE-1016, FIG. 1 (annotated)

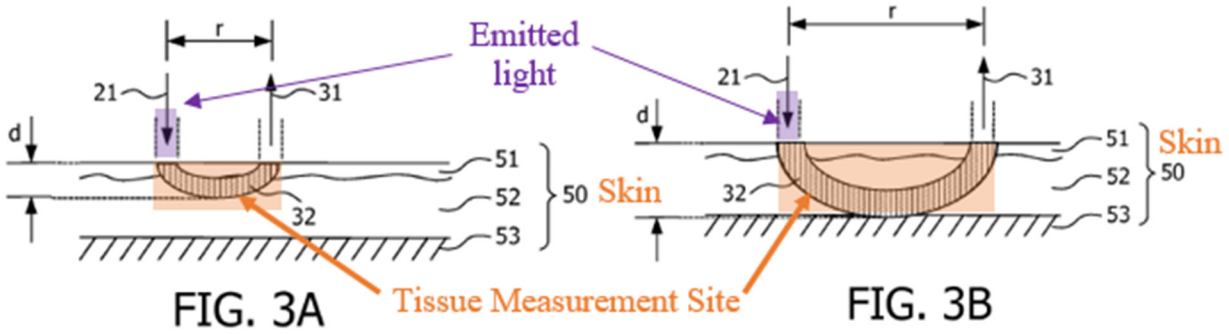

APPLE-1016, FIGS. 3A, 3B (depicting the tissue measurement site and reflection therefrom).

Limitation [9b]

Supra [1c].

Limitation [9c]

Supra [1f].

Limitation [9d]

Supra [1g].

Limitation [9e]

Supra [1f], [1g].

Limitation [9f]

Supra [1c], [1h].

Limitation [9g]

Supra [1d]

Limitation [9h]

Supra [1d], [1e].

Limitation [9i]

Supra [1d], [1e].

(f) **Limitation [13a,b]**

Supra [5a,b].

(g) **Limitation [15]**

Limitation [15] The method of claim 9, wherein the physiological parameter is indicative of at least one of pulse rate, perfusion index, oxygen content, and total hemoglobin.

Supra [8].

(h) **Limitation [16]**

As explained in [1pre]-[1b], [9a], Ackermans' optical sensor 10 includes a light emission source (emitter 20 with housing 46) comprising a plurality of emitters in the form of LEDs that emit light at different wavelengths, e.g., around 660 nm and 940 nm. APPLE-1016, 6:1-8. A POSITA would have understood that a 940 nm wavelength is an infrared wavelength. APPLE-1003, [138]; *see, e.g.,* APPLE-1019, 2:5-10 (identifying the "800-1000 nm" wavelength range as "infrared.").

(i) **Limitation [17]**

As explained in [1c], Ackermans discloses that the plurality of detectors can be implemented as "small photodiodes that are arranged between the inner ring 43 and the outer ring 41." APPLE-1016, 6:9-15; APPLE-1003, [139].

(j) **Claim 19**

Limitation [19pre]

Supra [1pre].

Limitation [19a]

Supra [1a].

Limitation [19b]

Supra [1a].

Limitation [19c]

Supra [1a], [1b].

Limitation [19d]

Supra [1c].

Limitation [19e]

Supra [1d].

Limitation [19f]

Supra [1e].

In addition to reciting the same/similar language as [1e], [19f] additionally recites that the "physiological parameter [is] indicative of a state or trend of wellness of the user." A POSITA would have understood that blood oxygen saturation level, a physiological parameter determined by Ackermans, are indicative of a state or trend of wellness of the user. APPLE-1003, [140]; *see, e.g.,* APPLE-1005, 21:22-44, 58:21-23, 58:45-51; APPLE-1018, 1:40-60.

Limitation [19g]

Supra 1[f].

Limitation [19h]

Supra 1[g].

Limitation [19i]

As explained in [1f], [1g], the light isolation chamber in Ackermans is defined by the inner ring 43. APPLE-1016, 4:22-32, 5:10-15, 6:22-35, FIGS. 1, 2. This chamber prevents light from the emitters 20 from being detected directly by the photodetectors 30 without attenuation by the user's skin. APPLE-1016, 5:10-15; APPLE-1003, [141].

Limitation [19j]

Supra 1[f] and 1[g].

Limitation [19k]

Supra 1[c] and 1[h].

(k) **Limitation [24a,b]**

Supra [5a,b].

(l) **Limitation [25a,b]**

Supra [1a], [16].

(m) **Limitation [26]**

As explained in [1c], [17], Ackermans discloses that the plurality of detectors can be implemented as "small photodiodes that are arranged between the inner ring 43 and the outer ring 41." APPLE-1016, 6:9-15.

(n) **Limitation [28a,b]**

Supra [1a], [16].

(o) **Limitation [29]**

Supra [1c], [17].

F. GROUND 2B: Claims 2, 3, 11, 12, 18, 22, 23, 27, and 30 are obvious based on Ackermans in view of Venkatraman

1. The combination of Ackermans and Venkatraman

It would have been obvious to a POSITA integrate the display of Venkatraman in the device of Ackermans because doing so would have amounted to nothing more than the use of a known technique to improve similar devices in the same way and combining prior art elements according to known methods to yield predictable results. *See KSR v. Teleflex*, 550 U.S. 398, 417 (2007). APPLE-1003, [143]. Here, both Ackermans and Venkatraman are wrist-worn, portable biometric monitoring devices. APPLE-1016, 10:29-35, FIG. 7; APPLE-1005, 12:16-21, 15:19-26, 52:23-53:18, FIGS. 6A, 6B, and 7. Implementing Venkatraman's display into Ackermans' device would be beneficial because a user would be able to view any measurement data through the display and provide input through the touch screen. Such a display would facilitate user interaction and ease of use of Ackerman's device. APPLE-1003, [143]. The combination of Ackermans and Venkatraman would have been predictable and had a reasonable

expectation of success as the elements of the combined system would each perform similar functions they had been known to perform prior to the combination, and because Venkatraman teaches a device operating in the proposed manner. APPLE-1003, [143].

In addition, it would have been obvious to a POSITA to combine the teachings of Venkatraman with the teachings of Ackermans to improve the collection of reflected and attenuated light from the tissue measurement site. Doing so would have amounted to nothing more than the use of a known technique to improve similar devices in the same way and combining prior art elements according to known methods to yield predictable results. *See KSR v. Teleflex*, 550 U.S. 398, 417 (2007); APPLE-1003, [144]. Here, Ackermans and Venkatraman are related to obtaining physiological parameters using a reflection system in which emitters emit radiation that is reflected from the human tissue and detected by detectors. APPLE-1016, 6:15-18, 1:8-18, 13:10-12, 3:10-12, 8:25-9:2, 10:3-10; APPLE-1005, 36:38-56, FIGS. 3A, 3B. Implementing Ackermans' sensor 10 to include Venkatraman's lens or light concentrator would have been predictable and had a reasonable expectation of success as using lens to manipulate light waves and improve detection is a well-known technique, and the components in Ackermans and Venkatraman would each perform similar functions they had been known to perform prior to the combination. APPLE-1003, [144]. For example,

the sensor 10 would still be performing the same sensor operations and would benefit from the lens function of directing light. APPLE-1003, [144]. In addition, the combination would have been predictable because Venkatraman teaches a device operating in the proposed manner.

2. Analysis

(a) **Limitation [2]**

As explained above in [1pre], Ackermans' optical sensor 10 is implemented within a wristwatch for placement on a user at a tissue measurement site. APPLE-1016, 10:29-35, FIG. 7 (reproduced below); APPLE-1003, [146].

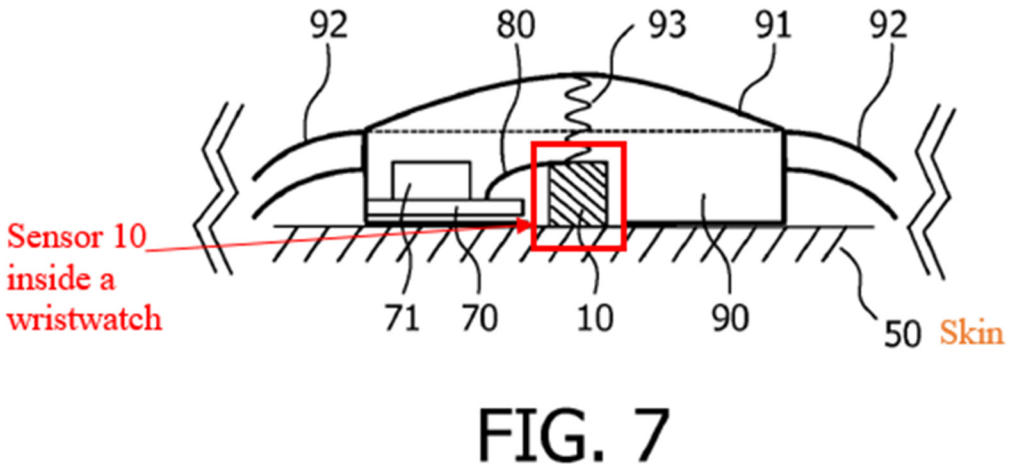

APPLE-1016, FIG. 7 (annotated)

However, Ackermans is silent regarding a display.

Venkatraman, like APPLE-1016, teaches that a portable biometric monitoring device can be wrist-worn, as shown in FIGS. 6A, 6B, and 7

(reproduced below). APPLE-1005, 12:16-21, 15:19-26, 52:23-53:18; APPLE-1003, [147].

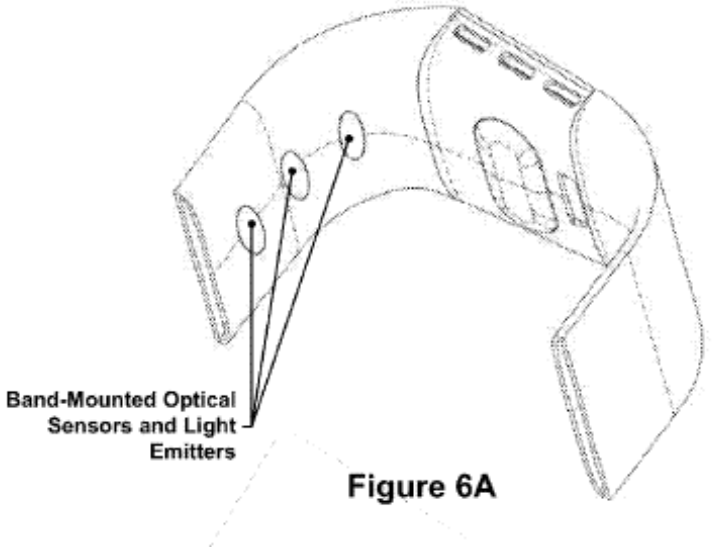

Venkatraman, FIG. 6A.

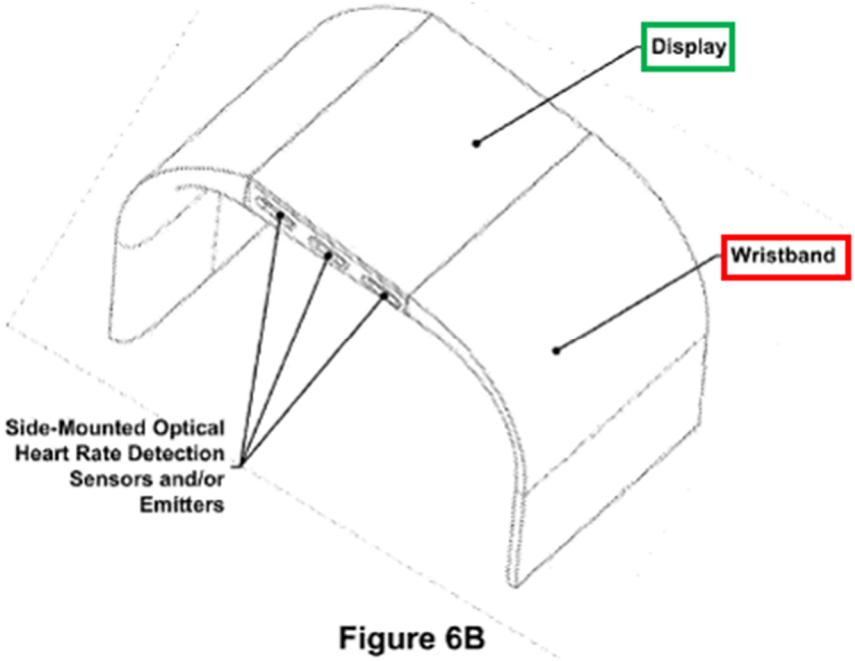

Venkatraman, FIG. 6B (annotated).

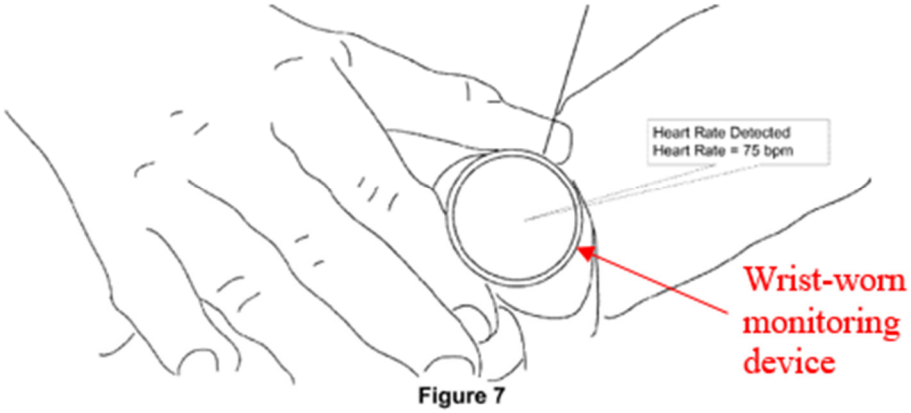

Venkatraman, FIG. 7 (annotated).

Venkatraman explains that "[b]iometric monitoring devices … are typically small in size so as to be unobtrusive for the wearer." APPLE-1005, 14:28-30. "Biometric monitoring devices are typically designed to be able to be worn without discomfort for long periods of time and to not interfere with normal daily activity." APPLE-1005, 14:30-36. A wrist-worn biometric monitoring device provides such comfort and lack of interference and obstruction. *Id.*; APPLE-1003, [148]. Venkatraman also discloses the use of a digital display, as shown in FIG. 6B, to display data acquired or stored locally on the wristwatch. APPLE-1005, 53:19-55:51. For example, a LED may be used to display the heart rate of a user. APPLE-1005, 53:60-63.

Venkatraman also discloses that the display may include capacitive touch buttons and capacitive screen buttons. APPLE-1005, 55:29-51. "In embodiments where the screen uses capacitive touch detection, [the biometric monitoring device]

may always be sampling and ready to respond to any gesture or input without an intervening event such as pushing a physical button." *Id.* Although a "touch-screen" display is not explicitly disclosed, a POSITA would have known that Venkatraman's display is a touch screen because it has capacitive touch buttons and capacitive screen buttons. APPLE-1003, [149].

For at least the foregoing reasons, [2] is rendered obvious by Ackermans and Venkatraman.

(b) **Limitation [3]**

As explained above in [2], the combination of Ackermans and Venkatraman discloses a touch screen display. For example, Venkatraman teaches that "[i]n embodiments where the screen uses capacitive touch detection, [the biometric monitoring device] may always be sampling and ready to respond to any gesture or input without an intervening event such as pushing a physical button." APPLE-1005, 55:29-51; APPLE-1003, [151].

(c) **Limitation [11]**

As explained above in [2], the combination of Ackermans and Venkatraman discloses a touch screen display. For example, Venkatraman also discloses the use of a digital display to display data acquired or stored locally on the wristwatch. APPLE-1005, 53:19-55:51. A LED may be used to display the heart rate of a user.

APPLE-1005, 53:60-63. Venkatraman also teaches that "[i]n embodiments where the screen uses capacitive touch detection, [the biometric monitoring device] may always be sampling and ready to respond to any gesture or input without an intervening event such as pushing a physical button." APPLE-1005, 55:29-51; APPLE-1003, [152].

(d) **Limitation [12]**

As explained above in [2], [11], the combination of Ackermans and Venkatraman discloses a touch screen display. For example, Venkatraman also discloses the use of a digital display to display data acquired or stored locally on the wristwatch. APPLE-1005, 53:19-55:51. A LED may be used to display the heart rate of a user. APPLE-1005, 53:60-63. Venkatraman also teaches that "[i]n embodiments where the screen uses capacitive touch detection, [the biometric monitoring device] may always be sampling and ready to respond to any gesture or input without an intervening event such as pushing a physical button." APPLE-1005, 55:29-51; APPLE-1003, [153].

(e) **Limitation [18]**

As explained in [1pre], [9a], Ackermans' detectors can be implemented as "small photodiodes that are arranged between the inner ring 43 and the outer ring 41" within a sensor housing 40. APPLE-1016, Abstract, 6:9-15. As noted in [1a], light emitted by the plurality of emitters enters the skin, is attenuated, reflects back

from the skin, and is subsequently detected by the photodetectors. *Id.*, 2:15-23, 6:1-8, 7:5-10, Abstract; FIGS. 3A, 3B. Venkatraman similarly discloses that "the circuitry related to emitting and receiving light may be disposed in the interior of the device housing." APPLE-1005, 33:65-34:3. Venkatraman teaches that such housing would readily incorporate light-transmissive structures that facilitate light transmission and collection. APPLE-1005, 34:5-18. In particular, Venkatraman discloses the use of a light concentrator in the form of a lens to facilitate light collection. *Id.* ("the light-transmissive structures may employ a material and/or optical design to facilitate low light loss (for example, the light-transmissive structures may include **a lens to facilitate light collection** …)"). While Venkatraman does not explicitly teach that the lens direct the light after attenuation to the plurality of detectors, it would have been obvious to a POSITA that Venkatraman's lens would have been placed between the tissue measurement site and the detectors so that reflected light can be directed onto the photodetectors 16, 18 to "facilitate light collection." APPLE-1005, 34:5-18; APPLE-1003, [154].

(f) **Limitation [22]**

As explained above in [2], the combination of Ackermans and Venkatraman discloses a touch screen display. For example, Venkatraman also discloses the use of a digital display to display data acquired or stored locally on the wristwatch. APPLE-1005, 53:19-55:51. A LED may be used to display the heart rate of a user.

APPLE-1005, 53:60-63. Venkatraman also teaches that "[i]n embodiments where the screen uses capacitive touch detection, [the biometric monitoring device] may always be sampling and ready to respond to any gesture or input without an intervening event such as pushing a physical button." APPLE-1005, 55:29-51; APPLE-1003, [156].

(g) **Limitation [23]**

As explained above in [2], [22], the combination of Ackermans and Venkatraman discloses a touch screen display. For example, Venkatraman also discloses the use of a digital display to display data acquired or stored locally on the wristwatch. APPLE-1005, 53:19-55:51. A LED may be used to display the heart rate of a user. APPLE-1005, 53:60-63. Venkatraman also teaches that "[i]n embodiments where the screen uses capacitive touch detection, [the biometric monitoring device] may always be sampling and ready to respond to any gesture or input without an intervening event such as pushing a physical button." APPLE-1005, 55:29-51; APPLE-1003, [157].

(h) **Limitation [27]**

As explained in [18], Ackermans' detectors can be implemented as "small photodiodes that are arranged between the inner ring 43 and the outer ring 41" within a sensor housing 40 APPLE-1016, Abstract, 6:9-15. Venkatraman similarly discloses that "the circuitry related to emitting and receiving light may be

disposed in the interior of the device housing." APPLE-1005, 33:65-34:3. Venkatraman teaches that such housing would readily incorporate light-transmissive structures that facilitate light transmission and collection. APPLE-1005, 34:5-18. In particular, Venkatraman discloses the use of a light concentrator in the form of a lens to facilitate light collection. *Id.* ("the light-transmissive structures may employ a material and/or optical design to facilitate low light loss (for example, the light-transmissive structures may include **a lens to facilitate light collection** …)"). While Venkatraman does not explicitly teach that the lens direct the light after attenuation to the plurality of detectors, it would have been obvious to a POSITA (for the reasons explained in [18]) that Venkatraman's lens would have been placed between the tissue measurement site and the detectors so that reflected light can be directed onto the photodetectors 16, 18 to "facilitate light collection." APPLE-1005, 34:5-18; APPLE-1003, [158].

(i) **Limitation [30]**

Supra [19], [27].

G. GROUND 2C: Claims 6, 14, and 21 are obvious based on Ackermans in view of Chin

1. The combination of Ackermans and Chin

It would have been obvious to a POSITA to combine Chin's diffuser Ackermans's physiological monitoring device to diffuse the light that is emitted

from the light source emitters so that the emitted light could pass through more tissue and blood, as taught by Chin. APPLE-1006, 2:4-7, 8:25-29; APPLE-1003, [160].

In the combination, the device of Ackermans is further modified to include Chin's diffuser between the emitters and the tissue measurement site. APPLE-1006, 2:4-7, 8:25-29; APPLE-1003, [161]. The diffuser would be placed at the bottom edge of the wall/optical shield so that light emitted from the light source emitters would be shielded from the detectors. APPLE-1003, [161]. By placing the diffuser at the bottom edge of the wall/optical shield, the light would travel within the area defined by the wall/optical shield, be received by the diffuser, and subsequently spread by the diffuser onto the tissue measurement site. APPLE-1003, [161]. An example of this configuration is shown below.

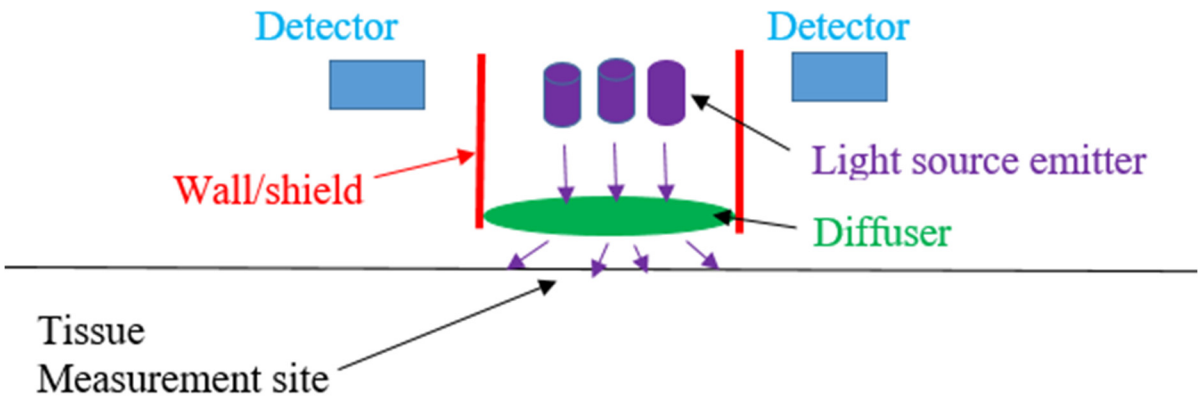

As can be appreciated from the foregoing, a POSITA would have combined the teachings of Ackermans and Chin because doing so would have amounted to

nothing more than the use of a known technique to improve similar devices in the same way and combining prior art elements according to known methods to yield predictable results. *See KSR v. Teleflex*, 550 U.S. 398, 417 (2007). APPLE-1003, [162]. And because a POSITA would be implementing the diffuser in a known way (specifically the way described in Chin), a POSITA would have had a reasonable expectation of success in integrating the diffuser of Chin into the pulse oximetry sensor of Ackermans. APPLE-1003, [162]; *see, e.g.,* APPLE-1006, 8:20-28.

In addition, a POSITA would have been motivated to incorporate Chin's diffuser into the pulse oximeter of Ackermans because the diffuser will cause the light "to pass through more tissue, and thus more blood," resulting in a stronger reflected signal at the detectors, which "allows it to be more easily processed by the oximeter electronics and software" to determine the measured physiological parameters. APPLE-1006, 2:4-7, 8:25-29, 9:64-10:7; APPLE-1003, [163].

2. Analysis

(a) **Limitations [6], [14], and [21]**

Ackermans does not disclose a diffuser. However, using a diffuser to spread emited light was well-known in the art as evidenced by Chin.

Chin is directed to an oximeter sensor with a heating element to improve perfusion. APPLE-1006, 1:14-17. Chin discloses that "[o]ne type of Oximeter

Sensor will add a diffusing optic to diffuse the light emitted from the light-emitting diodes (LEDs) to cause it to pass through more tissue, and thus more blood." APPLE-1006, 2:4-7, 8:25-29.

It would have been obvious to a POSITA to combine Chin's diffuser with Ackerman's physiological monitoring device to diffuse the light that is emitted from Ackermans' emitters (e.g., emitter 20) so that the emitted light could pass through more tissue and blood, as taught by Chin. APPLE-1006, 2:4-7, 8:25-29; APPLE-1003, [167]. Passing emitted light through more tissue and blood allows the oximeter to obtain a better sample of the user. APPLE-1003, [167].

To implement the diffuser, the diffuser would be placed between the emitters and the tissue measurement site. The diffuser would be placed at the bottom edge of the inner ring 43 so that light emitted from the emitters may be shielded from the detectors 30. By placing the diffuser at the bottom edge of the inner ring 43, the light would travel within the area defined by the inner ring 43, be received by the diffuser, and subsequently spread by the diffuser onto the tissue measurement site. APPLE-1003, [168]. An example is shown below:

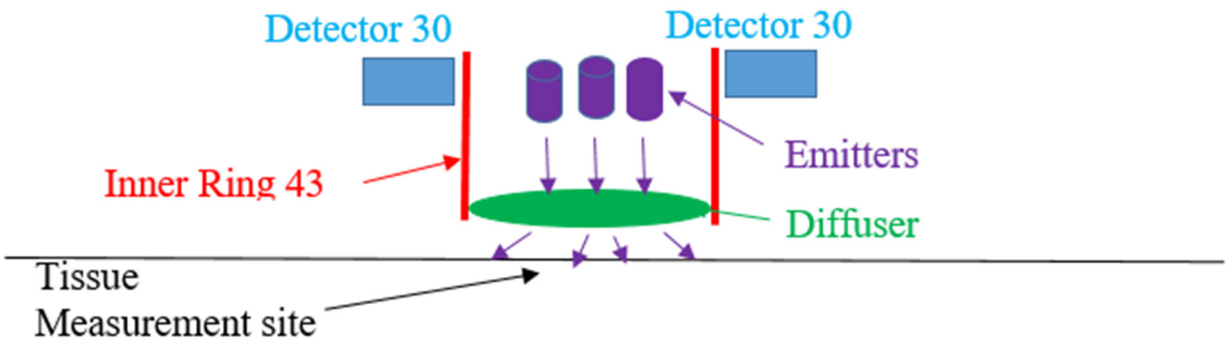

As can be appreciated from the foregoing, a POSITA would have combined the teachings of Ackermans and Chin because doing so would have amounted to nothing more than the use of a known technique to improve similar devices in the same way and combining prior art elements according to known methods to yield predictable results. *See KSR v. Teleflex*, 550 U.S. 398, 417 (2007). APPLE-1003, [167]. And because a POSITA would be implementing the diffuser in a known way, a POSITA would have had a reasonable expectation of success in combining the diffuser with the teachings of Ackermans-Chin. For at least the foregoing reasons, Ackermans in view of Chin renders this limitation obvious.

IV. PAYMENT OF FEES

Apple authorizes the Patent and Trademark Office to charge Deposit Account No. 06-1050 for the fee set in 37 C.F.R. § 42.15(a) for this Petition and further authorizes payment for any additional fees to be charged to this Deposit Account.

V. CONCLUSION

Apple respectfully requests institution of an IPR for the Challenged Claims.

VI. MANDATORY NOTICES UNDER 37 C.F.R § 42.8(a)(1)

A. Real Party-In-Interest Under 37 C.F.R. § 42.8(b)(1)

Petitioner, Apple Inc., is the real party-in-interest.

B. Related Matters Under 37 C.F.R. § 42.8(b)(2)

Apple is not aware of any disclaimers, reexamination certificates, or petitions for *Inter Partes* Review for the '695 Patent.

C. Lead And Back-Up Counsel Under 37 C.F.R. § 42.8(b)(3)

Apple provides the following designation of counsel.

Lead Counsel	Backup counsel
W. Karl Renner, Reg. No. 41,265 Fish & Richardson P.C. 3200 RBC Plaza 60 South Sixth Street Minneapolis, MN 55402 Tel: 202-783-5070 Fax: 877-769-7945 Email: IPR50095-0004IP1@fr.com	Dan Smith, Reg. No. 71,278 Kenneth Hoover, Reg. No. 68,116 Fish & Richardson P.C. 3200 RBC Plaza 60 South Sixth Street Minneapolis, MN 55402 Tel: 202-783-5070 Fax: 877-769-7945 PTABInbound@fr.com

D. Service Information

Please address all correspondence and service to the address listed above. Petitioner consents to electronic service by email at IPR50095-0004IP1@fr.com

(referencing No. 50095-0004IP1 and cc'ing PTABInbound@fr.com, axf-ptab@fr.com, dsmith@fr.com and hoover@fr.com.

Respectfully submitted,

Dated: October 2, 2020

/W. Karl Renner/

W. Karl Renner, Reg. No. 41,265
Dan Smith, Reg. No. 71,278
Kenneth Hoover, Reg. No. 68,116
Fish & Richardson P.C.
3200 RBC Plaza, 60 South Sixth Street
Minneapolis, MN 55402
T: 202-783-5070
F: 877-769-7945

(Control No. IPR2020-01722)

Attorneys for Petitioner

CERTIFICATION UNDER 37 CFR § 42.24

Under the provisions of 37 CFR § 42.24(d), the undersigned hereby certifies that the word count for the foregoing Petition for *Inter partes* Review totals 13,982 words, which is less than the 14,000 allowed under 37 CFR § 42.24.

Dated: October 2, 2020

/W. Karl Renner/

W. Karl Renner, Reg. No. 41,265
Dan Smith, Reg. No. 71,278
Kenneth Hoover, Reg. No. 68,116
Fish & Richardson P.C.
3200 RBC Plaza, 60 South Sixth Street
Minneapolis, MN 55402
T: 202-783-5070
F: 877-769-7945

Attorneys for Petitioner

CERTIFICATE OF SERVICE

Pursuant to 37 CFR §§ 42.6(e)(4)(i) *et seq.* and 42.105(b), the undersigned certifies that on October 2, 2020, a complete and entire copy of this Petition for *Inter partes* Review and all supporting exhibits were provided via Federal Express, to the Patent Owner by serving the correspondence address of record as follows:

KNOBBE, MARTENS, OLSON & BEAR, LLP
MASIMO CORPORATION (MASIMO)
2040 MAIN STREET
FOURTEENTH FLOOR
IRVINE CA 92614

/Diana Bradley/

Diana Bradley
Fish & Richardson P.C.
60 South Sixth Street, Suite 3200
Minneapolis, MN 55402
(858) 678-5667