Trials@uspto.gov
571-272-7822

Paper 15
Entered: January 24, 2023

UNITED STATES PATENT AND TRADEMARK OFFICE

BEFORE THE PATENT TRIAL AND APPEAL BOARD

APPLE INC.,
Petitioner,

v.

MASIMO CORPORATION,
Patent Owner.

IPR2022-01271
Patent 10,912,501 B2

Before JOSIAH C. COCKS, NEIL T. POWELL, and JAMES A. TARTAL, *Administrative Patent Judges.*

COCKS, *Administrative Patent Judge*.

DECISION
Denying Institution of *Inter Partes* Review
35 U.S.C. § 314

I. INTRODUCTION

Petitioner Apple Inc. filed a Petition (Paper 2, "Pet.") requesting *inter partes* review of claims 1–30 ("the challenged claims") of U.S. Patent No. 10,912,501 B1 (Ex. 1001, "the '501 patent").[1] Patent Owner Masimo Corporation filed a Preliminary Response (Paper 10, "Prelim. Resp."). We have authority under 35 U.S.C. § 314, which provides that an *inter partes* review may not be instituted unless the information presented in the Petition shows that "there is a reasonable likelihood that the petitioner would prevail with respect to at least 1 of the claims challenged in the petition." 35 U.S.C. § 314(a); *see also* 37 C.F.R § 42.4(a) ("The Board institutes the trial on behalf of the Director.").

Having considered the arguments and evidence presented in the Petition, for the reasons described below, we do not institute *inter partes* review.

A. Related Matters

The parties state that the '501 patent is the subject of *Masimo Corporation, et al. v. Apple Inc.,* ITC Inv No. 337-TA-1276. Pet. 1; Paper 5, 1. Patent Owner also identifies numerous additional patent applications, patents, and *inter partes* review proceedings as related to the '501 patent. Paper 5, 1–3.

[1] Petitioner additionally filed a second Petition (IPR2022-01272) that also challenges claims 1–30 of the '501 patent.

MASIMO 2004
Apple v. Masimo
IPR2024-00244

B. The '501 Patent

The '501 patent is titled "User-Worn Device for Noninvasively Measuring a Physiological Parameter of a User." Ex. 1001, code (54). The '501 patent summarizes its disclosure as follows:

> This disclosure describes embodiments of noninvasive methods, devices, and systems for measuring a blood constituent or analyte, such as oxygen, carbon monoxide, methemoglobin, total hemoglobin, glucose, proteins, glucose, lipids, a percentage thereof (e.g., saturation) or for measuring many other physiologically relevant patient characteristics. These characteristics can relate, for example, to pulse rate, hydration, trending information and analysis, and the like.
>
> In an embodiment, the system includes a noninvasive sensor and a patient monitor communicating with the noninvasive sensor. The non-invasive sensor may include different architectures to implement some or all of the disclosed features. In addition, an artisan will recognize that the non-invasive sensor may include or may be coupled to other components, such as a network interface, and the like. Moreover, the patient monitor may include a display device, a network interface communicating with any one or combination of a computer network, a handheld computing device, a mobile phone, the Internet, or the like. In addition, embodiments may include multiple optical sources that emit light at a plurality of wavelengths and that are arranged from the perspective of the light detector(s) as a point source.

Id. at 2:38–60.

The '501 patent describes that "[i]n noninvasive devices and methods, a sensor is often adapted to position a finger proximate the light source and light detector. For example, noninvasive sensors often include a clothespin-shaped housing that includes a contoured bed conforming generally to the shape of a finger." *Id.* at 2:30–34.

MASIMO 2004
Apple v. Masimo
IPR2024-00244

Figure 3C of the ’501 patent is reproduced below:

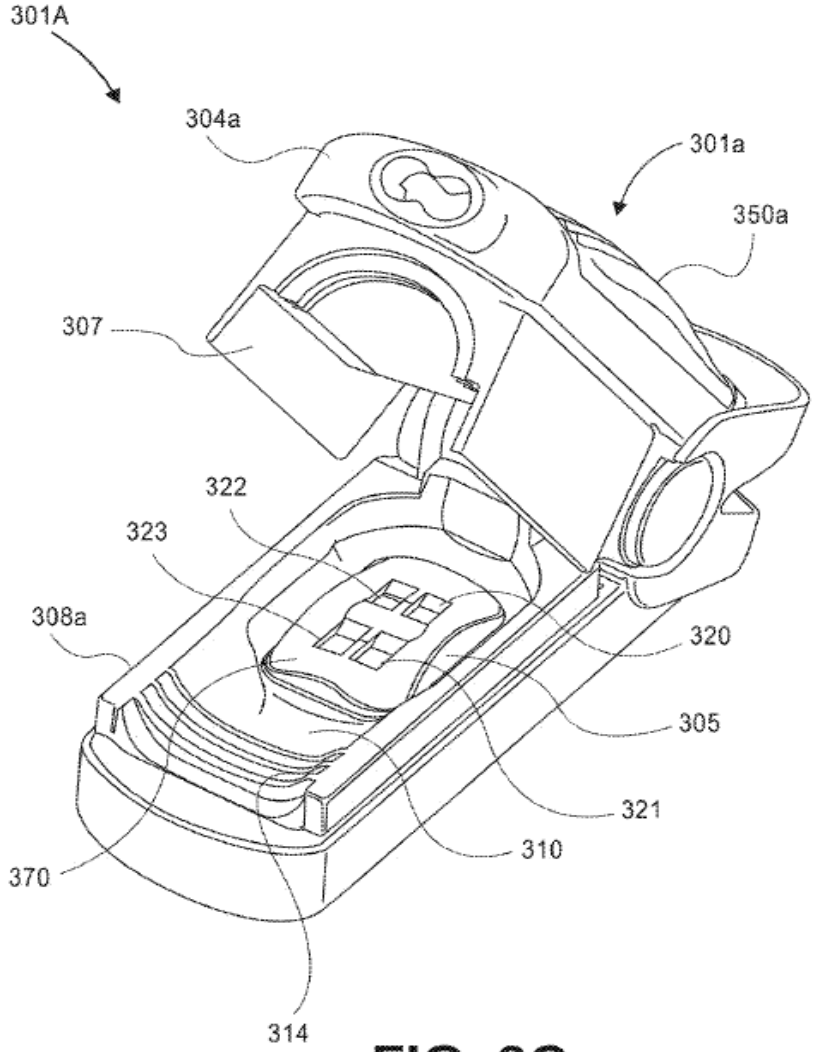

FIG. 3C

Figure 3C above illustrates an example sensor including a finger bed protrusion according to an embodiment of the disclosure. *Id.* at 5:52–55. Sensor 301a includes detector shell 306a (not numbered in Figure 3c) with lower area 308a that can “include absorbing opaque material . . . to reduce ambient light entering the sensor 301a.” *Id.* at 19:4–12. Finger bed 310 includes convex protrusion 305 with openings or windows 320, 321, 322, and 322 that “mirror specific detector placement layouts such that light can impinge through the protrusion 305 onto” photodetectors (not illustrated in

MASIMO 2004
Apple v. Masimo
IPR2024-00244

Figure 3C) that may be positioned beneath the protrusion. *Id.* at 19:42–48; 20:25–34.

C. Challenged Claims

Petitioner challenges claims 1–30 of the ’501 patent. Claims 1, 19, and 26 are independent claims. Claim 1 is representative and is reproduced below:

> 1. A user-worn device configured to non-invasively measure a physiological parameter of a user, the user-worn device comprising:
>
> at least three light emitting diodes (LEDs);
>
> at least three photodiodes arranged on an interior surface of the user-worn device and configured to receive light attenuated by tissue of the user;
>
> a protrusion arranged over the interior surface, the protrusion comprising a convex surface and a plurality of openings extending through the protrusion and positioned over the three photodiodes, the openings each comprising an opaque lateral surface, the plurality of openings configured to allow light to reach the photodiodes, the opaque lateral surface configured to avoid light piping through the protrusion; and
>
> one or more processors configured to receive one or more signals from the photodiodes and calculate a measurement of the physiological parameter of the user.

Ex. 1001, 45:2–19.

D. Alleged Grounds of Unpatentability

Petitioner asserts the following grounds of unpatentability:

MASIMO 2004
Apple v. Masimo
IPR2024-00244

Claim(s) Challenged	35 U.S.C. §	Reference(s)/Basis
1, 5–8, 11–13, 15–18	103	Mendelson-799,[2] Aizawa, [3] Ohsaki[4]
2, 19, 22, 24, 25	103	Mendelson-799, Aizawa, Ohsaki, Scharf[5]
3, 4, 23	103	Mendelson-799, Aizawa, Ohsaki, Goldsmith[6]
9, 10, 14, 20, 21, 26–30	103	Mendelson-799, Aizawa, Ohsaki, Goldsmith, Dalke[7]
1, 5–8, 11–13, 15–18	103	Mendelson-799, Aizawa, Kotanagi[8]
2, 19, 22, 24, 25	103	Mendelson-799, Aizawa, Kotanagi, Scharf
3, 4, 23	103	Mendelson-799, Aizawa, Kotanagi, Goldsmith
9, 10, 14, 20, 21, 26–30	103	Mendelson-799, Aizawa, Kotanagi, Dalke, Goldsmith

Pet. 1. In addition to the references listed above, Petitioner relies on the Declaration of Dr. Thomas W. Kenny (Ex. 1003).

---

[2] U.S. Patent No. US 6,801,799 B2 issued Oct. 5, 2004 ("Mendelson-799," Ex. 1006).

[3] U.S. Patent Application Publication No. US 2002/0188210 A1 published Dec. 12, 2002 ("Aizawa," Ex. 1007).

[4] U.S. Patent Application Publication No. US 2001/0056245 A1 published Dec. 27, 2001 ("Ohsaki," Ex. 1008).

[5] U.S. Patent No. 6,330,468 B1 issued Dec. 11, 2001 ("Scharf," Ex. 1011)

[6] U.S. Patent Application Publication US 2007/0093786 A1 published Apr. 26, 2007 ("Goldsmith," Ex. 1009).

[7] U.S. Patent Application Publication No. US 2006/0211924 A1 published Sep. 21, 2006 ("Dalke," Ex. 1010).

[8] PCT Application No. WO 2005/092182 A1 published Oct. 6, 2005 ("Kotanagi," Ex. 1015, 1016). All citations to Kotanagi in this Decision are to the English translation that is Exhibit 1016.

MASIMO 2004
Apple v. Masimo
IPR2024-00244

II. ANALYSIS

A. Principles of Law

A petition must show how the construed claims are unpatentable under the statutory grounds it identifies. 37 C.F.R. § 42.104(b)(4). Petitioner bears the burden of demonstrating a reasonable likelihood that it would prevail with respect to at least one challenged claim for a petition to be granted. 35 U.S.C. § 314(a).

A claim is unpatentable under § 103(a) if the differences between the claimed subject matter and the prior art are such that the subject matter, as a whole, would have been obvious at the time the invention was made to a person having ordinary skill in the art to which said subject matter pertains. *KSR Int'l Co. v. Teleflex Inc.*, 550 U.S. 398, 406 (2007). The question of obviousness is resolved on the basis of underlying factual determinations, including (1) the scope and content of the prior art; (2) any differences between the claimed subject matter and the prior art; (3) the level of skill in the art; and (4) when in evidence, objective indicia of non-obviousness (i.e., secondary considerations). *Graham v. John Deere Co.*, 383 U.S. 1, 17–18 (1966).

"In an [*inter partes* review], the petitioner has the burden from the onset to show with particularity why the patent it challenges is unpatentable." *Harmonic Inc. v. Avid Tech., Inc.*, 815 F.3d 1356, 1363 (Fed. Cir. 2016) (citing 35 U.S.C. § 312(a)(3) (requiring *inter partes* review petitions to identify "with particularity . . . the evidence that supports the grounds for the challenge to each claim")). This burden of persuasion never shifts to Patent Owner. *See Dynamic Drinkware, LLC v. Nat'l Graphics,*

MASIMO 2004
Apple v. Masimo
IPR2024-00244

Inc., 800 F.3d 1375, 1378 (Fed. Cir. 2015) (discussing the burden of proof in *inter partes* review).

At this preliminary stage, we determine whether the information presented shows a reasonable likelihood that Petitioner would prevail in establishing that at least one of the challenged claims would have been obvious over the proposed prior art. We analyze the asserted grounds with the above-noted principles in mind.

B. Level of Ordinary Skill in the Art

In determining the level of skill in the art, we consider the type of problems encountered in the art, the prior art solutions to those problems, the rapidity with which innovations are made, the sophistication of the technology, and the educational level of active workers in the field. *Custom Accessories, Inc. v. Jeffrey-Allan Indus. Inc.*, 807 F.2d 955, 962 (Fed. Cir. 1986); *Orthopedic Equip. Co. v. U.S.*, 702 F.2d 1005, 1011 (Fed. Cir. 1983).

Petitioner contends the following in connection with a person of ordinary skill in the art:

> A person of ordinary skill in the art relating to the subject matter of the '501 Patent as of July 3, 2008 ("POSITA") would have been a person with a working knowledge of physiological monitoring technologies. The person would have had a Bachelor of Science degree in an academic discipline emphasizing the design of electrical, computer, or software technologies, in combination with training or at least one to two years of related work experience with capture and processing of data or information, including but not limited to physiological monitoring technologies. Alternatively, the person could have also had a Master of Science degree in a relevant academic discipline with less than a year of related work experience in the same discipline.

Pet. 4 (citing Ex. 1003 ¶¶22–23).

MASIMO 2004
Apple v. Masimo
IPR2024-00244

Patent Owner does not dispute this proposed level of skill. Prelim. Resp. 10.

For purposes of this Decision, we adopt Petitioner's proposal as reasonable and consistent with the prior art and the '501 patent. *See Okajima v. Bourdeau*, 261 F.3d 1350, 1355 (Fed. Cir. 2001) (the prior art may reflect an appropriate level of skill in the art).

C. Claim Construction

We construe claims in the same manner used in a civil action under 35 U.S.C. § 282(b) "including construing the claim in accordance with the ordinary and customary meaning of such claim as understood by one of ordinary skill in the art and the prosecution history pertaining to the patent." 37 C.F.R. § 42.100(b). When applying that standard, we interpret the claim language as it would have been understood by one of ordinary skill in the art in light of the specification. *Wasica Fin. GmbH v. Cont'l Auto. Sys., Inc.*, 853 F.3d 1272, 1279–80 (Fed. Cir. 2017). Thus, we give claim terms their ordinary and customary meaning as understood by an ordinarily skilled artisan. *See Phillips v. AWH Corp.*, 415 F.3d 1303, 1312–13 (Fed. Cir. 2005) (en banc). Only terms that are in controversy need to be construed, and then only to the extent necessary to resolve the controversy. *Nidec Motor Corp. v. Zhongshan Broad Ocean Motor Co. Matal*, 868 F.3d 1013, 1017 (Fed. Cir. 2017).

Neither party offers any express construction for any claim term. *See* Pet. 4; Prelim. Resp. 9. We determine that all claim terms should be given their ordinary and customary meaning and that it is unnecessary to make that meaning explicit for any term.

MASIMO 2004
Apple v. Masimo
IPR2024-00244

D. Grounds Based Primarily on Mendelson-799, Aizawa, and Ohsaki

Petitioner contends that all of the challenged claims (i.e., claims 1–30) are rendered obvious based largely on the combined teachings of Mendelson-799, Aizawa, and Ohsaki.[9] As expressed throughout its Preliminary Response, Patent Owner does not agree.

1. Overview of Mendelson-799

Mendelson-799 is a U.S. patent titled "Pulse Oximeter and Method of Operation," and discloses a sensor for non-invasive measurement of a blood parameter, which includes a sensor housing, a radiation source, and a detector. Ex. 1006, codes (54), (57).

Figure 7 of Mendelson-799 is reproduced below.

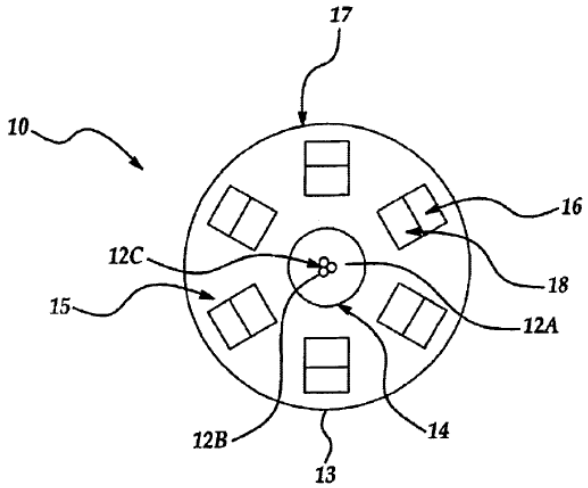

Figure 7

Figure 7 above illustrates optical sensor 10 with sensor housing 17 and light source 12, which includes three light emitting elements 12a, 12b, 12c. *Id.* at 9:22–28. Optical sensor 10 includes an array of discrete detectors, i.e., "far" detectors 16 and "near" detectors 18, "arranged in two concentric ring-like

[9] Some of the grounds also rely on additional teachings of Scharf, Goldsmith, and Dalke.

MASIMO 2004
Apple v. Masimo
IPR2024-00244

arrangements . . . surrounding the light emitting elements." *Id.* at 9:29–34. Sensor housing 17 accommodates the light source and detectors. *Id.* at 9:34–35.

2. Overview of Aizawa

Aizawa is a U.S. patent application publication titled "Pulse Wave Sensor and Pulse Rate Detector," and discloses a pulse wave sensor that detects light output from a light emitting diode and reflected from a patient's artery. Ex. 1007, codes (54), (57).

Figure 1(a) of Aizawa is reproduced below.

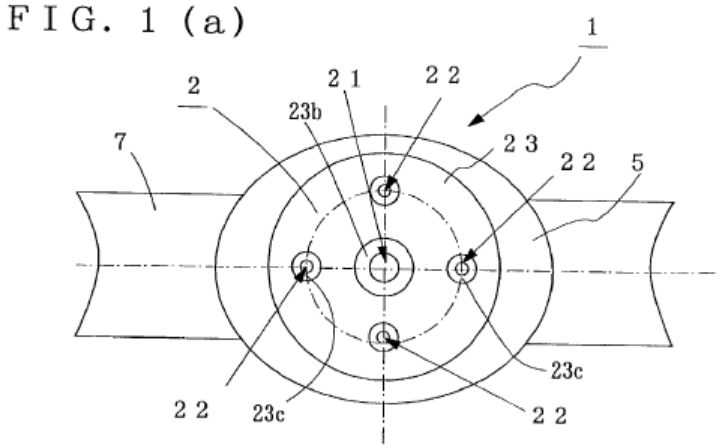

Figure 1(a) is a plan view of a pulse wave sensor. *Id.* ¶ 23. As shown in Figure 1(a), pulse wave sensor 2 includes light emitting diode ("LED") 21, four photodetectors 22 symmetrically disposed around LED 21, and holder 23 for storing LED 21 and photodetectors 22. *Id.* Aizawa discloses that, "to further improve detection efficiency, . . . the number of the photodetectors 22 may be increased." *Id.* ¶ 32, Fig. 4(a). "The same effect can be obtained when the number of photodetectors 22 is 1 and a plurality of light emitting diodes 21 are disposed around the photodetector 22." *Id.* ¶ 33.

MASIMO 2004
Apple v. Masimo
IPR2024-00244

Figure 1(b) of Aizawa is reproduced below.

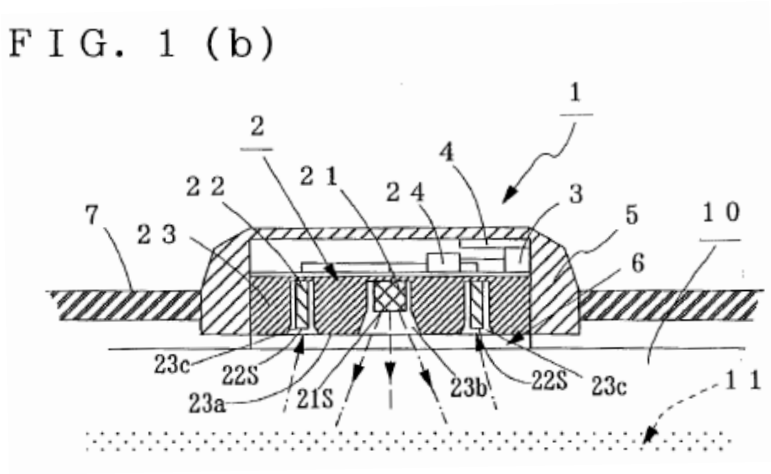

Figure 1(b) is a sectional view of the pulse wave sensor. *Id.* ¶ 23. As shown in Figure 1(b), pulse wave sensor 2 includes drive detection circuit 24 for detecting a pulse wave by amplifying the outputs of photodetectors 22. *Id.* ¶ 23. Arithmetic circuit 3 computes a pulse rate from the detected pulse wave and transmitter 4 transmits the pulse rate data to an "unshown display." *Id.* The pulse rate detector further includes outer casing 5 for storing pulse wave sensor 2, acrylic transparent plate 6 mounted to detection face 23a of holder 23, and attachment belt 7. *Id.* ¶ 23.

3. Overview of Ohsaki

Ohsaki is a U.S. patent application publication titled "Wristwatch-type Human Pulse Wave Sensor Attached on Back Side of User's Wrist," and discloses an optical sensor for detecting a pulse wave of a human body. Ex. 1008, code (54), ¶ 3.

MASIMO 2004
Apple v. Masimo
IPR2024-00244

Figure 1 of Ohsaki is reproduced below.

FIG. 1

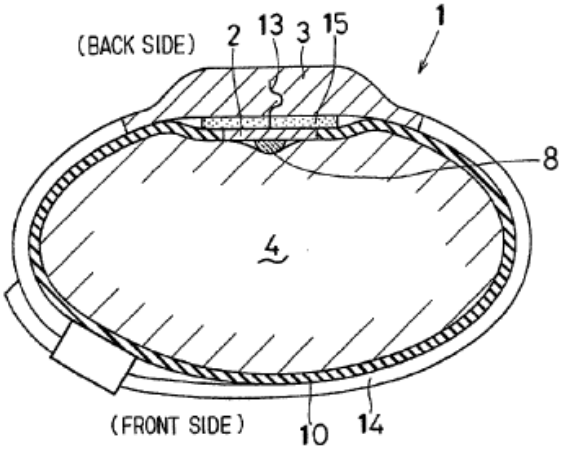

Figure 1 illustrates a cross-sectional view of pulse wave sensor 1 attached on the back side of user's wrist 4. *Id.* ¶¶ 12, 16. Pulse wave sensor 1 includes detecting element 2 and sensor body 3. *Id.* ¶ 16.

Figure 2 of Ohsaki, reproduced below, illustrates further detail of detecting element 2.

FIG. 2

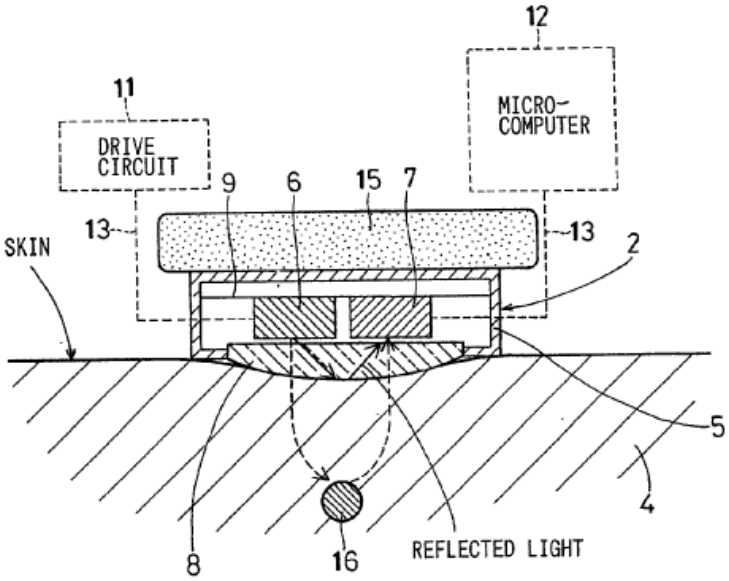

Figure 2 illustrates a mechanism for detecting a pulse wave. *Id.* ¶ 13. Detecting element 2 includes package 5, light emitting element 6, light

MASIMO 2004
Apple v. Masimo
IPR2024-00244

receiving element 7, and translucent board 8. *Id.* ¶ 17. Light emitting element 6 and light receiving element 7 are arranged on circuit board 9 inside package 5. *Id.* ¶¶ 17, 19.

4. Discussion

A principal feature of each of the independent claims of the '501 patent lies in the structure and arrangement of a "protrusion" located over at least three photodiodes arranged on an interior surface of a user-worn device. In particular, in claim 1 that feature reads as follows:

> a protrusion arranged over the interior surface, the protrusion comprising a convex surface and a plurality of openings extending through the protrusion and positioned over the three photodiodes, the openings each comprising an opaque lateral surface, the plurality of openings configured to allow light to reach the photodiodes, the opaque lateral surface configured to avoid light piping through the protrusion[.]

Ex. 1001, 45:9–16.

Thus, in claim 1, the protrusion feature requires a convex surface and multiple openings with opaque lateral surfaces that are positioned over multiple photodiodes in a configuration "to avoid light piping." "Light piping" is understood to be an undesirable condition in which "light bypasses" the measurement site, e.g., human tissue, without being attenuated by that tissue. *See* Ex. 1001, 22:48–50; *see also* Prelim. Resp. 7–8 (description of light piping). Independent claims 19 and 26 include similar requirements of such a protrusion.[10]

[10] In claim 19, in lieu of "a plurality of openings," there is a requirement of "a separate window" associated with each photodiode and configured to "reduce an amount of light reaching the photodiodes without being attenuated by the tissue." Ex. 1001, 46:42–49.

MASIMO 2004
Apple v. Masimo
IPR2024-00244

To arrive at the protrusion requirement in the claims, Petitioner presents a series of composite or modified figures that Petitioner contends would have emerged from the teachings of the prior art, specifically here, Mendelson-799, Aizawa, and Ohsaki. At the outset, we reproduce again Mendelson-799's unmodified Figure 7:

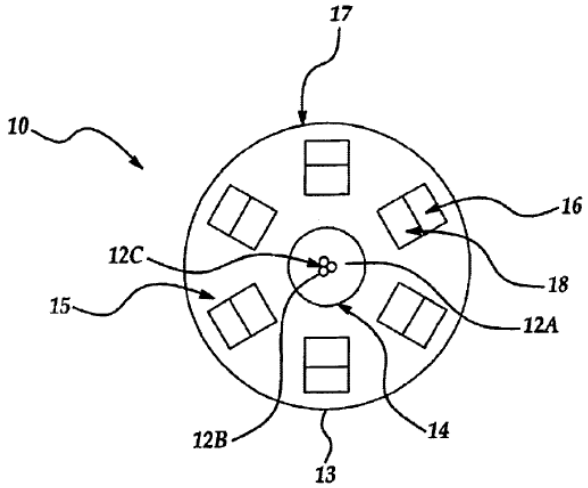

Figure 7

Figure 7 above illustrates Mendelson-799's optical sensor 10 with light sources 12a, 12b, and 12c and an "array of discrete detectors" (16 and 18) accommodated within sensor housing 17. *Id.* at 9:22–35. Although Mendelson-799 does not present a side view of the optical sensor illustrated in its Figure 7 (reproduced *supra*), Petitioner contends that Mendelson-799's Figure 7, when modified by the teachings of Aizawa to incorporate an opaque "holder," would appear as follows:

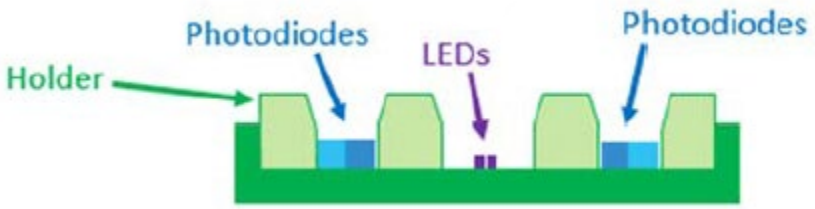

Pet. 21 (citing Ex. 1003 ¶ 48). In Petitioner's and Dr. Kenny's view, and as depicted in the modified figure above, the application of a holder from

MASIMO 2004
Apple v. Masimo
IPR2024-00244

Aizawa onto Mendelson's optical sensor is asserted to result in multiple additional interior portions that extend in a manner so as to constitute a "protrusion" with multiple openings. *See, e.g.*, *id.* at 22. The basis of Petitioner's proposed ground of unpatentability, however, does not end there. To account for the claim requirement pertaining to a convex surface, Petitioner proceeds to Ohsaki's teachings, and specifically its disclosure of translucent board 8 with convex surface, shown, for instance, in Ohsaki's Figure 2 (reproduce *supra*). Although, as Patent Owner notes, Ohsaki's board 8 is a singular structure that is translucent without openings (*see* Prelim. Resp. 34), Petitioner and Dr. Kenny are of the view that applying Ohsaki's teachings to Mendelson-799 and Aizawa, results in a further reconfiguration of the opaque holder said to arise from Mendeslon-799's and Aizawa's teachings as follows:

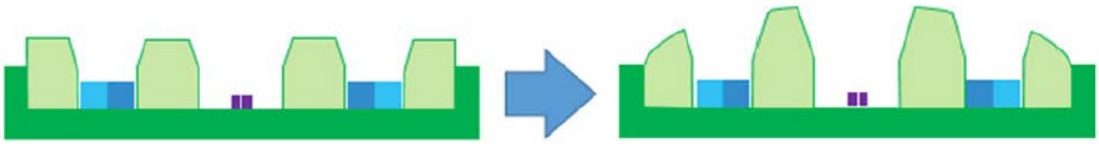

Id. at 27 (citing Ex. 1003 ¶ 56). Petitioner and Dr. Kenny generally contend that the above-reproduced figure on the right results from the combined teachings of Mendelson-799, Aizawa, and Ohsaki as a matter of simply being "use of a known technique to improve similar devices in the same way." *Id.* at 28 (citing Ex. 1003 ¶ 58).

Although it is certainly the case that an obviousness analysis may take into account the inferences and creative steps that a skilled artisan might glean from the teachings of the prior art (*see, e.g.*, *KSR,* 550 U.S. at 418), one must be cognizant that "hindsight is not an available analytical mechanism to show obviousness." *See In re Omeprazole Patent Litig.*, 483 F.3d 1364, 1381 (Fed. Cir. 2007) (Newman, J., dissenting). Indeed, "we

MASIMO 2004
Apple v. Masimo
IPR2024-00244

cannot allow hindsight bias to be the thread that stitches together prior art patches into something that is the claimed invention." *See Metalcraft of Mayville, Inc. v. The Toro Co.*, 848 F.3d 1358, 1367 (Fed. Cir. 2017). Without the guidance provided by the claims of the '501 patent, it is difficult to conclude that Petitioner's postulation as to a particular structure that results from combining the teachings of Mendelson-799, Aizawa, and Ohsaki is based on an objective assessment of what those teachings would have conveyed to a skilled artisan. It is clear from the Petition, however, that such structural configuration is necessary as the basis for Petitioner's approach to arriving at the structural requirements of the claims.[11]

At the outset, we share Patent Owner's view, and that of its declarant, Dr. Duckworth (Ex. 2002), that none of the prior art on which Petitioner relies discloses a convex protrusion with multiple openings for multiple detectors. *See, e.g.*, Prelim. Resp 31; Ex. 2002 ¶ 76. The proposed amalgamation of prior art teachings includes, for instance, arranging a "holder" from Aizawa into a configuration that, for ill explained reasons, forms protruded portions of that holder containing multiple openings associated with photodetectors of Mendelson-799's optical sensor in an attempt to satisfy the structural requirements of the claim. *See, e.g.*, Pet. 21–22. In our view, however, Petitioner simply does not explain adequately why such configuration with respect to Mendelson-799's optical sensor results from the actual teachings of the prior art.

---

[11] Although Petitioner, in a footnote, generally contends that "other examples" of composite figure configurations "could be conceived" so as to render the challenged claims obvious, Petitioner does not provide further assessment or explanation in that regard. *See* Pet. 21 n.5. We find that general contention unavailing.

MASIMO 2004
Apple v. Masimo
IPR2024-00244

Further still, in an effort to next account for a convex shape of the protrusions and openings, Petitioner must rely on Ohsaki's convex translucent board under the premise that Ohsaki's board shape would "improve adhesion" or provide "improved user comfort" for the detector formed from a combination of Mendelson-799 and Aizawa. *See, e.g.* Pet. 24–29. Yet, consistent with the arguments advanced by Patent Owner and Dr. Duckworth, we are not satisfied that Petitioner adequately explains why a skilled artisan would have expected that such benefits would apply to the convoluted combination of modifications Petitioner proposes to arrive at the claimed invention. *See, e.g.*, Prelim. Resp. 24–29, 47–49, 55–56; Ex. 2002 ¶¶ 96–98, 109–112. Nor has Petitioner explained adequately why a skilled artisan would have assessed that Petitioner's reasoning applies to a protrusion configured to have specific characteristics, e.g., multiple distinct openings and opaque lateral surfaces, intended to provide a particular function, i.e., reduction of light piping, that is unaffiliated with concerns of adhesion. *See, e.g.*, Prelim. Resp. 24–29, 47–49, 55–56; Ex. 2002 ¶¶ 96–98, 109–112.

On the record before us here, we find questionable Petitioner's and Dr. Kenny's assessment and reasoning as to what a skilled artisan would have understood from the teachings of Mendelson-799, Aizawa, and Ohsaki as proposed by Petitioner here. We find persuasive Patent Owner's arguments that Petitioner's and Dr. Kenny's assessments are grounded in hindsight rather than based on due consideration of the teachings of the pertinent prior art. *See, e.g.*, Prelim. Resp. 26–30. Dr. Duckworth's testimony that one of ordinary skill in the art would not have combined the teachings of the prior art in the manner advocated by Petitioner further supports Patent Owner's arguments. *See, e.g.*, Ex. 2002 ¶¶ 96–98, 109–112.

MASIMO 2004
Apple v. Masimo
IPR2024-00244

Based on the record here, we conclude that Petitioner has not shown a reasonable likelihood of success based on any of the proposed grounds that involve the combined teachings of Mendelson-799, Aizawa, and Ohsaki.[12]

E. Grounds Based on Mendelson-799, Aizawa, and Kotanagi

Petitioner also contends that all of the challenged claims are rendered obvious based largely on the combined teachings of Mendelson-799, Aizawa, and Kotanagi. Patent Owner does not agree.

1. Overview of Kotanagi

Kotanagi is titled "Biological Information Measuring Device." Ex. 1016, code (54). Kotanagi describes that a biological information measuring device can include a biological sensor including a body and a protrusion formed on the lower surface of the body. *Id.* at code (57). Kotanagi explains that the protrusion can be formed with a "curved surface." *Id.* at ¶ 80.

2. Discussion

Petitioner proposes that all of the challenged claims are unpatentable based, in whole or in part, on the combined teachings of Mendelson-799, Aizawa, and Kotanagi. Kotanagi's teachings are advanced by Petitioner as being analogous to, or alternative of, those of Ohsaki. *See, e.g.*, Pet. 86–90. In particular, Petitioner specifies that it applies Kotanagi's teachings for "the same reasons" as was proposed for the grounds including Ohsaki and that Kotanagi provides "additional/alternative motivation" to apply a convex

[12] The additional teachings of Scharf, Goldsmith, and Dalke are not offered by Petitioner to overcome the deficiencies discussed with respect to the combination of Mendelson-799, Aizawa, and Ohsaki.

MASIMO 2004
Apple v. Masimo
IPR2024-00244

protrusion in conjunction with the combined teachings of Mendelson-799 and Aizawa. *See, e.g.*, *id.* at 88.

In our view, Petitioner's proposed grounds of unpatentability for the challenged claims fare no better based on Kotanagi's teachings than they did for those grounds based on Ohsaki's teachings. For the same reasons discussed above, we conclude that Petitioner has not shown a reasonable likelihood of success in connection with any of its proposed grounds that involve the combined teachings of Mendelson-799, Aizawa, and Kotanagi.[13]

III. CONCLUSION

Petitioner has not shown a reasonable likelihood that it would prevail with respect to at least one of the challenged claims.

IV. ORDER

In consideration of the foregoing, it is

ORDERED that Petitioner's request for an *inter partes* review of claims 1–30 of the '501 patent is *denied* and no trial is instituted.

[13] Here, too, the additional teachings of Scharf, Goldsmith, and Dalke are not offered to overcome the deficiencies identified with respect to the combination of Mendelson-799, Aizawa, and Kotanagi.

MASIMO 2004
Apple v. Masimo
IPR2024-00244

FOR PETITIONER:

Walter Renner
Andrew Patrick
Hyun Jin In
Grace Kim
Dan Smith
Gretchen DeVries
FISH & RICHARDSON P.C.
Axf-ptab@fr.com
patrick@fr.com
in@fr.com
gkim@fr.com
dsmith@fr.com
devries@fr.com

FOR PATENT OWNER:

Stephen Larson
Jarom Kesler
Irfan Lateef
Brian Claassen
Jacob Peterson
KNOBBE, MARTENS, OLSON, & BEAR, LLP
2swl@knobbe.com
2jzk@knobbe.com
2ial@knobbe.com
2bcc@knobbe.com
2jup@knobbe.com

MASIMO 2004
Apple v. Masimo
IPR2024-00244