Trials@uspto.gov
Tel: 571-272-7822

Paper 15
Entered: January 30, 2023

UNITED STATES PATENT AND TRADEMARK OFFICE

BEFORE THE PATENT TRIAL AND APPEAL BOARD

APPLE INC.,
Petitioner,

v.

MASIMO CORPORATION,
Patent Owner.

IPR2022-01276
Patent 10,945,648 B2

Before JOSIAH C. COCKS, NEIL T. POWELL, and JAMES A TARTAL, *Administrative Patent Judges.*

POWELL, *Administrative Patent Judge*.

DECISION
Denying Institution of *Inter Partes* Review
35 U.S.C. § 314

I. INTRODUCTION

A. BACKGROUND

Apple Inc. ("Petitioner") filed a Petition for *inter partes* review of claims 1–30 of U.S. Patent No. 10,945,648 B2 (Ex. 1001, "the '648 patent"). Paper 2 ("Pet."). Masimo Corporation ("Patent Owner") filed a Preliminary Response. Paper 10 ("Prelim. Resp.").

Under 35 U.S.C. § 314(a), an *inter partes* review may not be instituted unless the information presented in the Petition and any response thereto shows "there is a reasonable likelihood that the petitioner would prevail with respect to at least 1 of the claims challenged in the petition." Considering the Petition, the Preliminary Response, and the evidence of record, we determine that Petitioner does not show a reasonable likelihood that at least one of the challenged claims is unpatentable. Accordingly, we do not institute *inter partes* review.

B. RELATED PROCEEDINGS

The parties note that the '648 patent is involved in *Masimo Corporation, et al. v. Apple Inc.*, ITC Inv. No. 337-TA-1276. Pet. 94; Paper 5, 1. Apple Inc. v. Masimo Corporation and Sound United, LLC, U.S. District Court for the District of Delaware, Case No. 1:22-cv-01378-MN. Paper 14, 1. The parties also identify a number of related *inter partes* review proceedings. Pet. 95; Paper 5, 3. Additionally, Patent Owner identifies a number of related patents, patent applications, and litigations involving related patents. Paper 5, 1–4.

C. THE '648 PATENT

The '648 patent discusses devices using spectroscopic analysis in patient monitoring. Ex. 1001, 2:14–19. These devices may have at least a

MASIMO 2009
Apple v. Masimo
IPR2024-00244

light source that sends light into or off a measurement site, such as flesh with blood pulsing through it. *Id.* at 2:16–19. A photo-detection device detects attenuated light from the measurement site, generating a signal in response to the detected light. *Id.* at 2:19–22. The signal is processed by a signal processing device to produce data for monitoring a patient's condition. *Id.* at 2:25–28. For example, the signal processing device may indicate "a blood constituent of interest, such as glucose, oxygen, met hemoglobin, total hemoglobin, or other physiological parameters." *Id.*

An example system for measuring one or more blood analytes noninvasively appears in Figure 1. *Id.* at 5:41–44. Figure 1 is reproduced below.

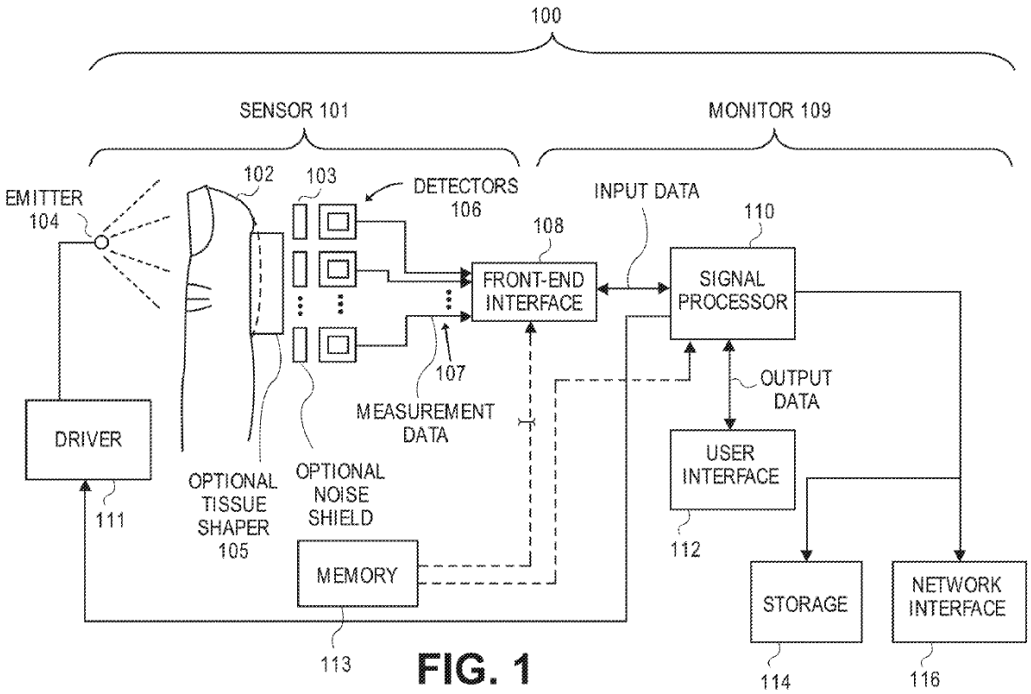

FIG. 1

Figure 1 shows data collection system 100, which includes sensor 101 and monitor 109. *Id.* at 11:51–53.

In the embodiment shown in Figure 1, sensor 101 "includes an emitter 104, a tissue shaper 105, a set of detectors 106, and a front-end

MASIMO 2009
Apple v. Masimo
IPR2024-00244

interface 108." *Id.* at 11:63–65. Emitter 104 can send optical radiation to measurement site 102. *Id.* at 11:65–67. "[E]mitter 104 can include one or more sources of optical radiation, such as LEDs, laser diodes, incandescent bulbs with appropriate frequency-selective filters, combinations of the same, or the like." *Id.* at 12:1–4. Emitter 104 is driven by driver 111. *Id.* at 13:55–56. Monitor 109 may control driver 111, which can provide current pulses to emitter 104. *Id.* at 13:56–61.

Detectors 106 may capture and measure light generated by emitter 104 and attenuated or reflected from measurement site 102. *Id.* at 14:7–11. Responsive to the captured or measured light, detectors 106 can produce detector signal 107. *Id.* at 14:11–13. "[D]etectors 106 can be implemented using one or more photodiodes, phototransistors, or the like." *Id.* at 14:13–14.

The output of detectors 106 is adapted by front end interface 108. *Id.* at 14:31–33. "For example, the front end interface 108 can adapt a signal 107 received from one or more of the detectors 106 into a form that can be processed by the monitor 109." *Id.* at 14:33–36.

"[M]onitor 109 can include the signal processor 110 and a user interface, such as a display 112," as well as storage device 114, and network interface 116. *Id.* at 15:21–25. Signal processor 110 may have "processing logic that determines measurements for desired analytes, such as glucose, based on the signals received from the detectors 106." *Id.* at 15:25–29. Signal processor 110 can control sensor 101's operation with signals, including an emitter control signal provided to driver 111 to control pulses from emitter 104. *Id.* at 15:34–39. "The user interface 112 can provide an output, e.g., on a display, for presentation to a user of the data collection

MASIMO 2009
Apple v. Masimo
IPR2024-00244

system 100." *Id.* at 15:51–53. "The various software and/or firmware applications can be stored in the storage device 114, which can be executed by the signal processor 110 or another processor of the monitor 109." *Id.* at 16:2–5. Network interface 116 may enable monitor 109 to share data and communicate with other devices. *Id.* at 16:5–11.

"[M]ore detailed examples of embodiments of a sensor" appear in Figures 3A through 3C. *Id.* at 18:33–34. Figure 3A is reproduced below.

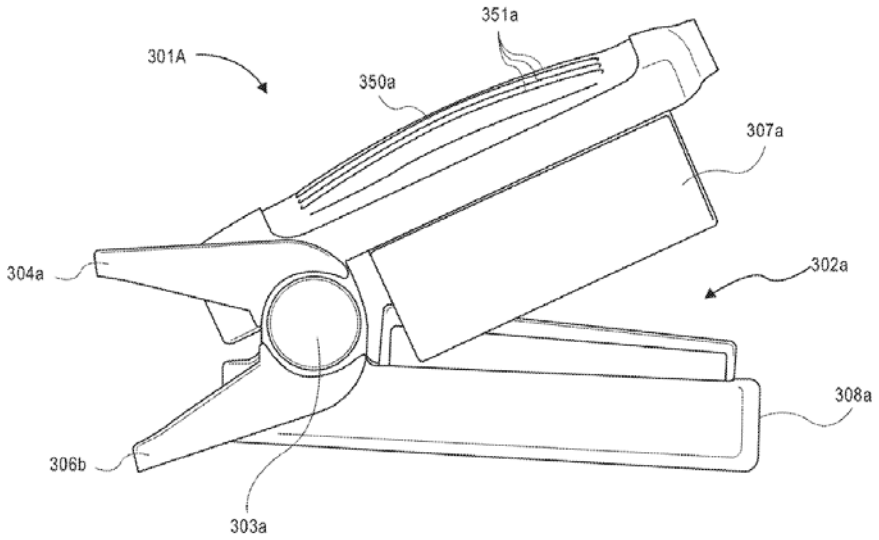

FIG. 3A

Figure 3A shows sensor 301a, which "is a clothespin-shaped clip sensor that includes an enclosure 302a for receiving a patient's finger. The enclosure 302a is formed by an upper section or emitter shell 304a, which is pivotably connected with a lower section or detector shell 306a."[1] *Id.* at 18:37–42. Another view of sensor 301a appears in Figure 3C, which is reproduced below.

[1] In this passage, it appears that "detector shell 306a" should read "detector shell 308a."

MASIMO 2009
Apple v. Masimo
IPR2024-00244

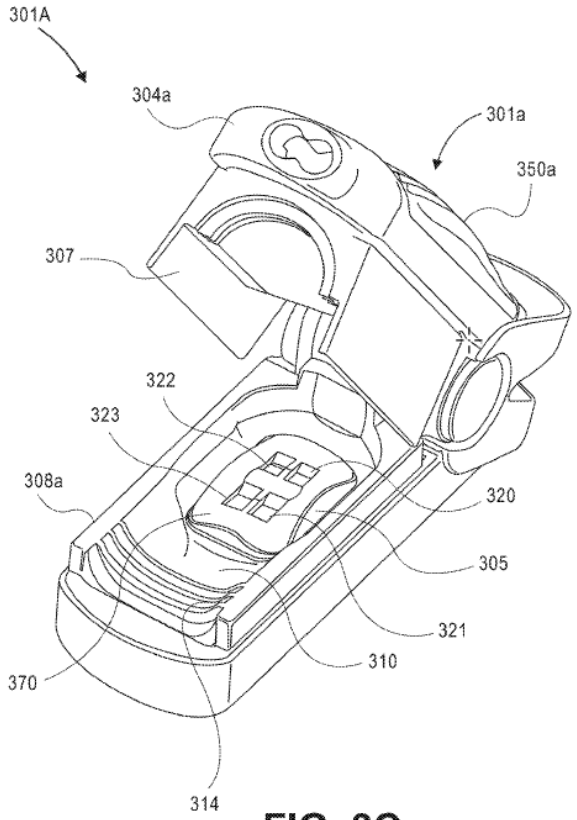

FIG. 3C

Figure 3C shows sensor 301a's finger bed 310. *Id.* at 19:7–8.

Finger bed 310 may have a generally curved surface suited for receiving flesh, e.g., a human digit. *Id.* at 19:8–10. Ridges 314 on finger bed 310 may help hold a patient's finger to finger bed 310, which can promote accurate spectroscopic analysis. *Id.* at 19:10–17.

Finger bed 310 can also comprise protrusion 305. *Id.* at 19:22–23. Protrusion 305 may be a convex bump. *Id.* at 21:18–19. Protrusion 305 comprises measurement site contact area 370. *Id.* at 19:23–25. Contact area 370 has windows 320, 321, 322, and 323. *Id.* at 19:31–33. "[W]indows 320, 321, 322, and 323 can be made from materials, such as plastic or glass." *Id.* at 19:45–46.

MASIMO 2009
Apple v. Masimo
IPR2024-00244

In an embodiment, the location of windows 320, 321, 322, and 323 may mirror the location of photodetectors, allowing light from a measurement site to reach the photodetectors through windows 320, 321, 322, and 323. *Id.* at 19:33–41. Additionally, "[i]n an embodiment, the photodetectors can be positioned within or directly beneath the protrusion." *Id.* at 20:18–19. The '648 patent shows this in Figure 3E, which is reproduced below.

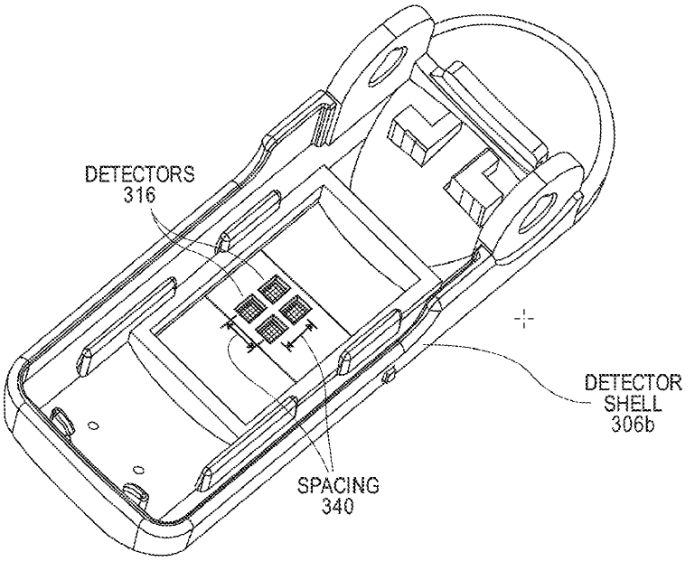

FIG. 3E

Figure 3E "illustrates a perspective view of an example noninvasive sensor detector shell including example detectors." *Id.* at 5:56–58.

Specifically, Figure 3E shows detectors 316. *Id.* at 22:28–32. "The detectors 316 can have a predetermined spacing 340 from each other, or a spatial relationship among one another that results in a spatial configuration." *Id.* at 22:33–35.

MASIMO 2009
Apple v. Masimo
IPR2024-00244

D. ILLUSTRATIVE CLAIM

Of the challenged claims, claims 1, 6, 8, and 20 are independent. Each of claims 2–5, 7, 9–19, and 21–30 depends, directly or indirectly, from one of independent claims 1, 6, 8, and 20. Claim 8 is illustrative and is reproduced below with certain reformatting:[2]

1. [8pre] A user-worn device configured to non-invasively determine measurements of physiological parameter of a user, the user-worn device comprising:

[8a] a first set of light emitting diodes (LEDs), the first set comprising at least an LED configured to emit light at a first wavelength and at least an LED configured to emit light at a second wavelength;

[8b] a second set of LEDs spaced apart from the first set of LEDs, the second set of LEDs comprising an LED configured to emit light at the first wavelength and an LED configured to emit light at the second wavelength;

[8c] four photodiodes;

[8d] a protrusion comprising a convex surface, at least a portion of the protrusion comprising an opaque material;

[8e] a plurality of openings provided through the protrusion and the convex surface, the openings aligned with the photodiodes;

[8f] a separate optically transparent window extending across each of the openings;

[8g] one or more processors configured to receive one or more signals from at least one of the photodiodes and output measurements of a physiological parameter of a user;

[8h] a housing; and

[8i] a strap configured to position the housing proximate tissue of the user when the device is worn.

---

[2] We have added the same labels that Petitioner uses to identify different portions of claim 8. *See* Pet. vi–vii.

MASIMO 2009
Apple v. Masimo
IPR2024-00244

Ex. 1001, 45:45–46:3.

E. EVIDENCE

Petitioner relies on the following evidence:

(1) U.S. Patent No. 7,620,212 B1, issued Nov. 17, 2009 ("Lumidigm") (Ex. 1006).

(2) Published International Patent Application No. WO 2005/092182 A1, published Oct. 6, 2005 ("Kotanagi") (Ex. 1007).

(3) U.S. Patent No. 9,820,658 B2, issued Nov. 21, 2017 ("Tran") (Ex. 1008).

(4) U.S. Patent No. 9,001,047 B2, issued Apr. 7, 2015 ("Forstall") (Ex. 1017).

(5) U.S. Patent No. 5,952,084, issued Sep. 14, 1999 ("Anderson") (Ex. 1018).

(6) U.S. Patent No. 6,330,468 B1, issued Dec. 11, 2001 ("Scharf") (Ex. 1025).

(7) Declaration of Thomas W. Kenny, Ph.D. (Ex. 1003).

Patent Owner relies on the declaration of R. James Duckworth, Ph.D. (Ex. 2002).

F. ASSERTED GROUND OF UNPATENTABILITY

Petitioner challenges the patentability of claims 1–30 of the '648 patent on the following grounds (Pet. 4):

Claims Challenged	35 U.S.C. §	Reference(s)
8, 9	103	Lumidigm, Scharf, Kotanagi
1–7, 10, 12–17, 19, 20–30	103	Lumidigm, Scharf, Kotanagi, Tran

MASIMO 2009
Apple v. Masimo
IPR2024-00244

Claims Challenged	35 U.S.C. §	Reference(s)
11	103	Lumidigm, Scharf, Kotanagi, Tran, Forstall
18	103	Lumidigm, Scharf, Kotanagi, Anderson

II. ANALYSIS

A. LEVEL OF ORDINARY SKILL

Petitioner contends that

> [a] person of ordinary skill in the art relating to the subject matter of the '648 Patent as of July 3, 2008 ("POSITA") would have been a person with a working knowledge of physiological monitoring technologies. The person would have had a Bachelor of Science degree in an academic discipline emphasizing the design of electrical, computer, or software technologies, in combination with training or at least one to two years of related work experience with capture and processing of data or information, including but not limited to physiological monitoring technologies. APPLE-1003, ¶¶40-41. Alternatively, the person could have also had a Master of Science degree in a relevant academic discipline with less than a year of related work experience in the same discipline. *Id*.

Pet. 2. Patent Owner does not dispute Petitioner's description of a person of ordinary skill in the art. *See* Prelim. Resp. 10. For purposes of deciding whether Petitioner has demonstrated a reasonable likelihood of prevailing, we adopt Petitioner's definition of a person of ordinary skill in the art, which we find consistent with the '648 patent and the asserted prior art.

B. CLAIM CONSTRUCTION

In an *inter partes* review proceeding, a claim of a patent is construed using the same standard used in federal district court, including construing the claim in accordance with the ordinary and customary meaning of the

MASIMO 2009
Apple v. Masimo
IPR2024-00244

claim as understood by one of ordinary skill in the art and the prosecution history pertaining to the patent. 37 C.F.R. § 42.100(b) (2020). According to the applicable standard, claim terms "are generally given their ordinary and customary meaning" as understood by a person of ordinary skill in the art in question at the time of the invention. *Phillips v. AWH Corp.*, 415 F.3d 1303, 1312–13 (Fed. Cir. 2005) (en banc) (citations omitted). Only those terms that are in controversy need be construed, and only to the extent necessary to resolve the controversy. *See Nidec Motor Corp. v. Zhongshan Broad Ocean Motor Co.*, 868 F.3d 1013, 1017 (Fed. Cir. 2017) (citing *Vivid Techs., Inc. v. America Sci. & Eng'g, Inc.*, 200 F.3d 795, 803 (Fed. Cir. 1999)).

Petitioner argues that "[n]o formal claim constructions are necessary in this proceeding." Pet. 3. Patent Owner contends we "should give the claim terms their ordinary and customary meaning, consistent with the specification, as a [person of ordinary skill in the art] would understand them." Prelim. Resp. 10. We do not discern a need to construe any claim language expressly in order to determine whether Petitioner demonstrates a reasonable likelihood of prevailing.

C. Alleged Obviousness of Claims 8 and 9 over Lumidigm, Scharf, and Kotanagi

1. *Overview of Lumidigm*

Lumidigm is titled "Electro-Optical Sensor." Ex. 1006, code (54). Lumidigm's Abstract is reproduced below:

> Methods and systems are provided that extend the functionality of electro-optical sensors. A device has a multiple light sources, a light detector, and a processor configured to operate the light sources and the light detector to perform distinct functions. At least one of the distinct functions includes a biometric identification function in which light is propagated

MASIMO 2009
Apple v. Masimo
IPR2024-00244

> from the plurality of light sources through presented material. The propagated light is received with the light detector, with the presented material being identified from the received light. Another of the distinct functions includes a nonidentification function performed with the light sources and the light detector.

Id. at code (57).

Lumidigm's Figure 2 is reproduced below:

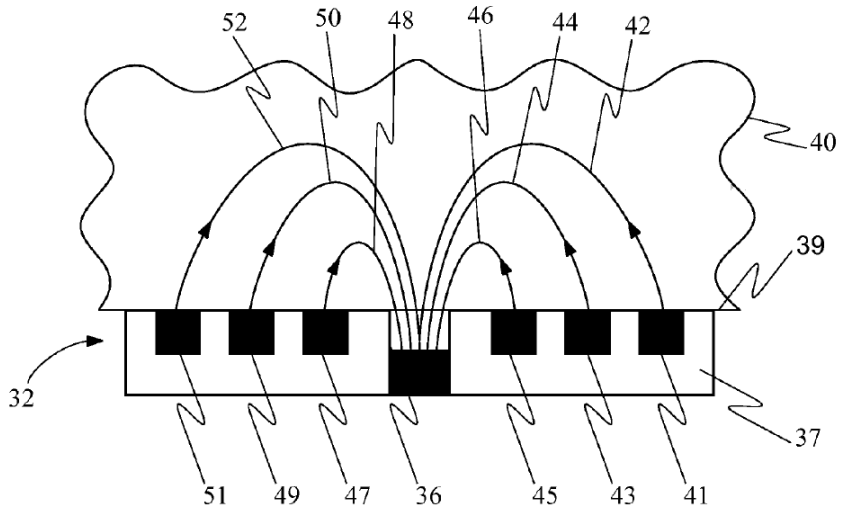

FIG. 2

Figure 2 above depicts a "cross-sectional view of a biometric sensor element couple to a tissue surface showing multiple mean optical paths." *Id.* at 4:45–47. Sensor head 32 includes light sources 41, 43, 45, 47, 49, 51 and detector 36. *Id.* at 7: 5–10. Optical paths 42, 44, 46, 48, 50, 52 show light passing through tissue 40. *Id.* Sensor head 32 is formed of optically opaque material 37.

MASIMO 2009
Apple v. Masimo
IPR2024-00244

Lumidigm's Figures 6 and 7A are reproduced below:

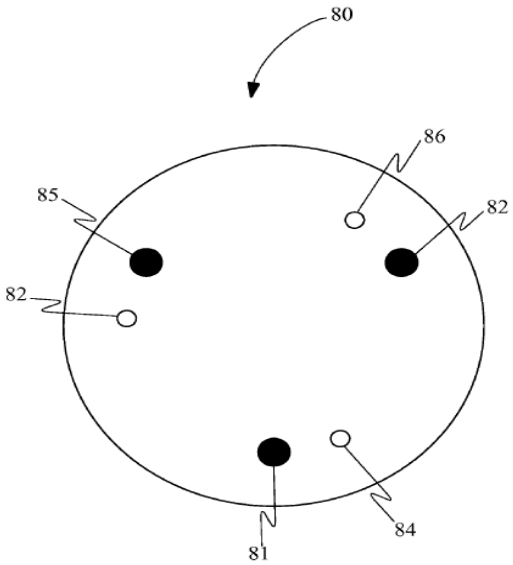

FIG. 6

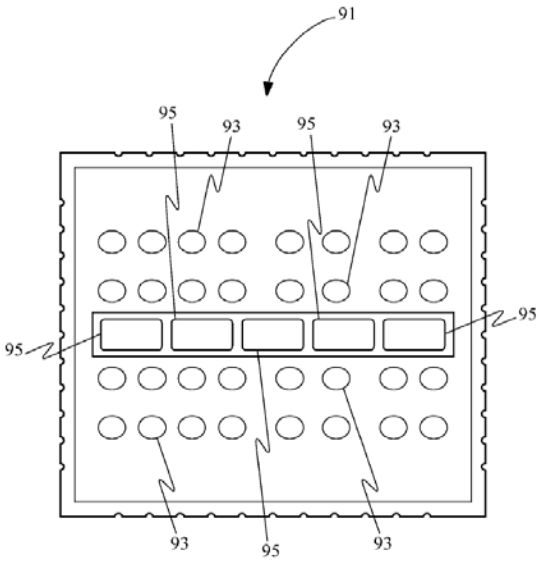

FIG. 7A

Figures 6 and 7A above illustrate top-views of biometric sensors according to two embodiments of the invention. *Id.* at 4:60–67. In Figure 6, light sensor 80 includes light sources 82, 84, 86 positioned relative to detectors 81, 83, 85. *Id.* at 9:14–16.[3] In Figure 7A, sensor 91 includes two rows of light sources 93 and one row of detectors 95. *Id.* at 9:27–30.

2. *Overview of Scharf*

Scharf is titled "System Using Green Light to Determine Parameters of a Cardiovascular System." Ex. 1025, code (54). Scharf describes a reflectance oximeter that uses two green light sources to detect oxygen saturation of hemoglobin in a volume of intravascular blood. *Id.* at 2:39–42.

[3] It would appear that the reference character "82" on the right side of Figure 6 should read "83."

MASIMO 2009
Apple v. Masimo
IPR2024-00244

Scharf's Figure 3 is reproduced below:

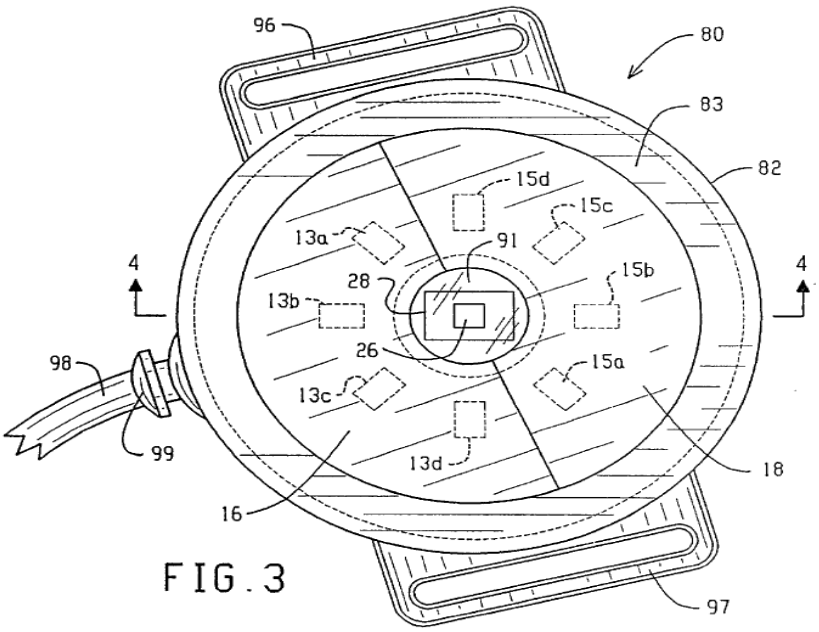

FIG. 3

Figure 3 above shows a bottom plan view of an oximeter probe according to an embodiment. *Id.* at 3:40–41. The oximeter probe may include green lights formed of light emitting diodes (LEDs) 13, 15. *Id.* at 4:18–20. Scharf explains that, depending on the particular type of green light sources, green optical filters 16, 18 may be needed. *Id.* at 4:30–34.

3. *Overview of Kotanagi*

Kotanagi is titled "Biological Information Measuring Device." Ex. 1007, code (54). Kotanagi describes that a biological information measuring device can include a biological sensor including a body and a protrusion formed on the lower surface of the body. *Id.* at code (57). Kotanagi explains that the protrusion can be formed with a "curved surface." *Id.* ¶ 80.

MASIMO 2009
Apple v. Masimo
IPR2024-00244

4. *Discussion*

A principal feature of independent claim 8 lies in the structure and arrangement of a "protrusion" located over four photodiodes arranged on a user-worn device. In this respect, claim 8 recites:

> a protrusion comprising a convex surface, at least a portion of the protrusion comprising an opaque material;
>
> a plurality of openings provided through the protrusion and the convex surface, the openings aligned with the photodiodes; [and]
>
> a separate optically transparent window extending across each of the openings.

Ex. 1001, 45:57–64. Thus claim 8 requires an at least partially opaque protrusion feature with a convex surface, multiple openings position over multiple photodiodes, and optically transparent windows across the openings.

To arrive at the protrusion requirement in the claims, Petitioner presents composite or modified figures that Petitioner contends would have emerged from the teachings of Lumidigm and Kotanagi. Although Lumidigm does not present side views of the optical sensor that is illustrated in its Figures 6 and 7A (reproduced *supra*), Petitioner contends that based on the combined teachings of Lumidigm and Kotanagi, the following figures emerge:

MASIMO 2009
Apple v. Masimo
IPR2024-00244

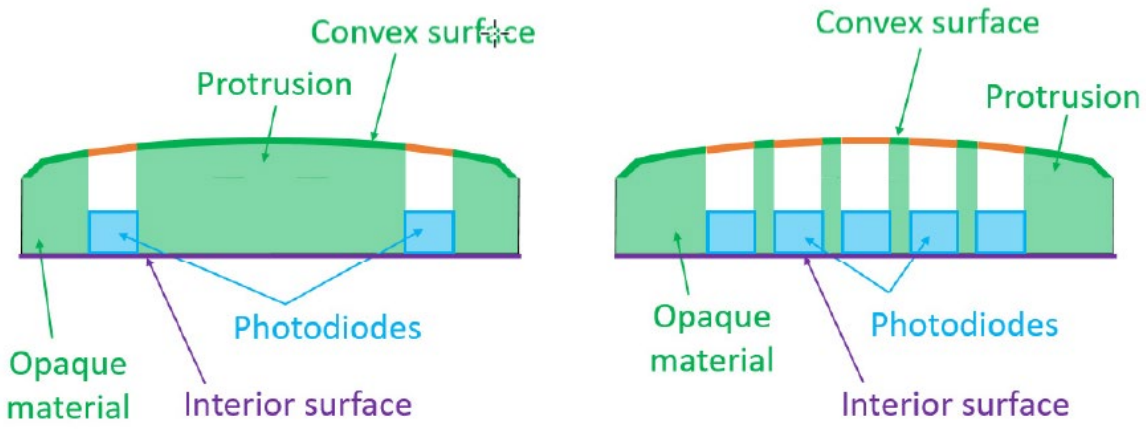

Pet. 41–42 (citing Ex. 1003 ¶ 125). In Petitioner's and Dr. Kenny's view, and as depicted in the modified figure above, the application of Kotanagi's curved surface to each of Lumidigm's Figures 6 and 7A results in a "combination device" with a protrusion and "a plurality of openings, one per photodiode, extending through the protrusion and positioned over the photodiodes." *Id.* at 42 (citing Ex. 1003 ¶ 127) (emphasis omitted). The basis of Petitioner's proposed ground of unpatentability, however, does not end there.

Additionally, in accounting for the claim language drawn to positioning a separate window across each opening in the convex protrusion, Petitioner alleges that, in light of Scharf's teachings, the following further modified figures emerge:

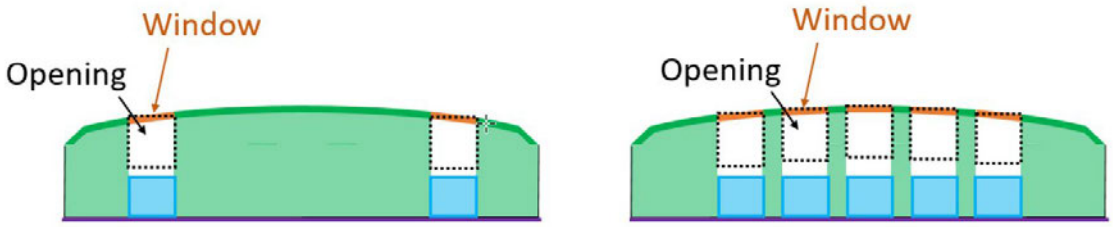

Id. at 43–44.

MASIMO 2009
Apple v. Masimo
IPR2024-00244

Although it is certainly the case that an obviousness analysis may take into account the inferences and creative steps that a skilled artisan might glean from the teachings of the prior art (*see, e.g.*, *KSR Int'l Co. v. Teleflex Inc.*, 550 U.S. 398, 418 (2007)), one must be cognizant that "hindsight is not an available analytical mechanism to show obviousness." *See In re Omeprazole Patent Litig.*, 483 F.3d 1364, 1381 (Fed. Cir. 2007) (Newman, J., dissenting). Indeed, "we cannot allow hindsight bias to be the thread that stitches together prior art patches into something that is the claimed invention." *See Metalcraft of Mayville, Inc. v. The Toro Co.*, 848 F.3d 1358, 1367 (Fed. Cir. 2017). Without the guidance provided by the claims of the '648 patent, it is difficult to conclude that Petitioner's postulation as to a particular structure that results from combining the teachings of Lumidigm, Kotanagi, and Scharf is based on an objective assessment of what those teachings would have conveyed to a skilled artisan. It is clear from the Petition, however, that such structural configuration is necessary as the basis for Petitioner's approach to arriving at the structural requirements of the claims.[4]

At the outset, we share Patent Owner's view, and that of its declarant, Dr. Duckworth (Ex. 2002), that none of the prior art on which Petitioner relies discloses a convex protrusion with multiple openings or windows for multiple detectors. *See, e.g.*, Prelim. Resp 28–29; Ex. 2002 ¶ 76. As discussed above, Petitioner attempts to arrive at such structure through a

[4] Although Petitioner, in a footnote, generally contends that "other examples" of composite figure configurations "could be conceived" so as to render the challenged claims obvious, Petitioner does not provide further assessment or explanation in that regard. *See* Pet. 14 n.5. We find that general contention inadequately supported.

MASIMO 2009
Apple v. Masimo
IPR2024-00244

proposed amalgamation of prior art teachings that must include, for instance, arranging a convex protrusion with multiple openings and separate glass windows over Lumidigm's optical sensors. In our view, however, Petitioner simply does not explain adequately why such configuration results from the actual teachings of the prior art.

Moreover, in an effort to next account for a convex shape of the protrusions and openings, Petitioner relies on Kotanagi's curved protrusion as providing, for instance, "better contact" and be "more comfortable" for a user of Lumidigm's detector. *See, e.g.*, Pet. 29–30. Yet, consistent with the arguments advanced by Patent Owner and Dr. Duckworth, we are not satisfied that Petitioner adequately explains why a skilled artisan would have expected that such benefits would apply to the convoluted combination of modifications Petitioner proposes to arrive at the claimed invention. *See, e.g.*, Prelim. Resp. 43–52; Ex. 2002 ¶¶ 163–175. Nor has Petitioner explained adequately why a skilled artisan would have assessed that Petitioner's reasoning applies to a protrusion configured to have specific characteristics, e.g., at least partly having opaque material and having multiple distinct openings, that are unaffiliated with concerns of contact or comfort. *See, e.g.*, Prelim. Resp. 43–52; Ex. 2002 ¶¶ 163–175.

Further still, we share Patent Owner's skepticism (*see, e.g.*, Prelim. Resp. 63–67) that Petitioner's reliance on Scharf's teachings justifies Petitioner's theory that separate glass coverings or windows would be placed over different openings within a convex protrusion. *See, e.g.*, Pet. 32–33. Although Petitioner expresses that "glass covers" generally are known in the art, in our view, Petitioner does not explain adequately why the particular teachings of Scharf on which Petitioner relies give rise to the specific

MASIMO 2009
Apple v. Masimo
IPR2024-00244

window configuration required by the noted claims. *See id.* Dr. Duckworth's testimony supports Patent Owner's argument that Scharf's teachings applied to a combination of Lumidigm and Kotanagi do not convey reasonably to a skilled artisan the positioning of windows over the openings of a convex protrusion in the manner urged by Petitioner. *See, e.g.*, Ex. 2002 ¶¶ 179–185.

After consideration of the record before us, we find questionable Petitioner's and Dr. Kenny's assessment and reasoning as to what a skilled artisan would have understood from the teachings of Lumidigm, Scharf, and Kotanagi as proposed by Petitioner here. We find persuasive Patent Owner's arguments that Petitioner's and Dr. Kenny's assessments are grounded in hindsight rather than based on due consideration of the teachings of the pertinent prior art. *See, e.g.*, Prelim. Resp. 26–28. Dr. Duckworth's testimony that one of ordinary skill in the art would not have combined the teachings of the prior art in the manner advocated by Petitioner further supports Patent Owner's arguments. *See, e.g.*, Ex. 2002 ¶¶ 163–175, 179–185.

Based on the record here, we conclude Petitioner has not shown a reasonable likelihood of demonstrating obviousness of either claim 8 or 9 in view of Lumidigm, Scharf, and Kotanagi.

D. Alleged Obviousness of Claims 1–7, 10, 12–17, 19, and 20–30 over Lumidigm, Scharf, Kotanagi, and Tran

1. *Overview of Tran*

Tran discusses patient monitoring in connection with Figure 1. Ex. 1008, 8:42. Figure 1 is reproduced below.

MASIMO 2009
Apple v. Masimo
IPR2024-00244

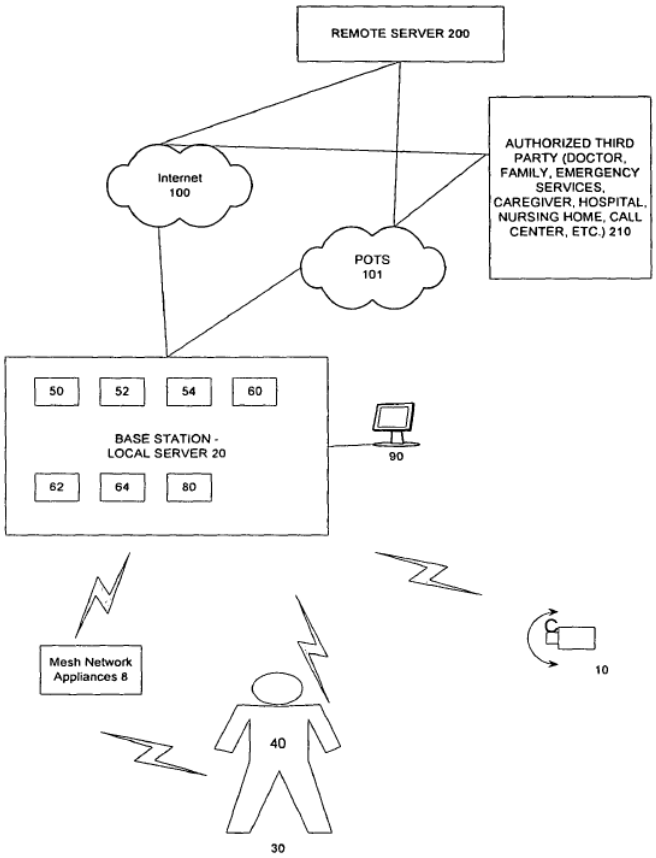

FIG. 1

Figure 1 shows "an exemplary system for monitoring a person." *Id.* at 8:7–8.

> The system may include appliances 8, which can be one of multiple portable physiological transducer, such a s blood pressure monitor, heart rate monitor, weight scale, thermometer, spirometer, single or multiple lead electrocardiograph (ECG), a pulse oximeter, a body fat monitor, a cholesterol monitor a signal from a medicine cabinet, a signal from a drug container, a signal from a commonly used appliance such as a refrigerator/stove/oven/washer, or a signal from an exercise machine such as a heart rate.

Id. at 8:49–58.

Tran explains that "one appliance is a patient monitoring device that can be worn by a patient." *Id.* at 8:59–60. Tran adds that patient 30 "may

MASIMO 2009
Apple v. Masimo
IPR2024-00244

wear one or more wearable patient monitoring appliances such as wrist-watches or clip on devices or electronic jewelry to monitor the patient." *Id.* at 9:66–10:1. "One wearable appliance such as a wrist-watch includes sensors 40, for example devices for sensing ECG, EKG, blood pressure, sugar level, among others." *Id.* at 10:1–4. Tran discusses an example in connection with Figure 6A. Figure 6A is reproduced below.

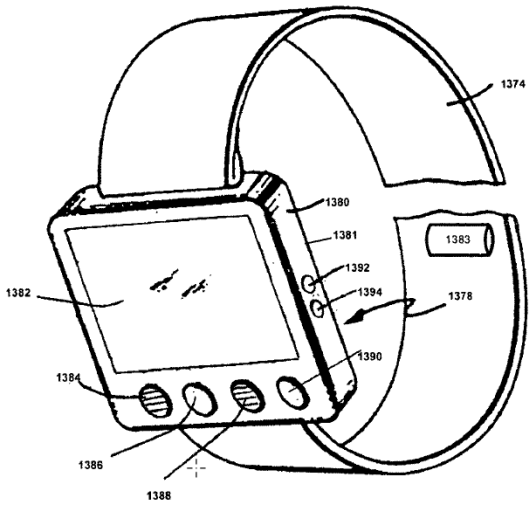

FIG. 6A

Figure 6A "shows an exemplary wrist-watch based assistance device." *Id.* at 8:16–17. The device comprises a wrist-watch sized case 1380 attached to a wrist band 1374. *Id.* at 46:5–6. "The housing 1380 contains the processor and associated peripherals to provide the human-machine interface." *Id.* at 49:11–13. The front section of housing 1380 includes display 1382, speaker 1384, push-button switch 1386, microphone 1388, and push-button switch 1390. *Id.* at 49:13–17.

2. *Discussion*

Petitioner's challenge of claims 1–5, 6, 7, 10, 12–17, 19, and 20–30 based on Lumidigm, Scharf, Kotanagi, and Tran builds from its challenge of

MASIMO 2009
Apple v. Masimo
IPR2024-00244

independent claim 8 based on Lumidigm, Scharf, and Kotanagi.[5] Pet. 49–87. When addressing the limitations of independent claims 1, 6, and 20, the Petition generally refers back to its treatment of the limitations of independent claim 8 based on Lumidigm, Scharf, and Kotanagi. *E.g.,* Pet. 57–65, 70–73, 81–82. Petitioner adds arguments and evidence regarding Tran to address certain limitations not present in independent claim 8, such as independent claim 1's requirement for "one or more processors configured to . . . determine measurements of oxygen saturation of the user." Ex. 1001, 44:63–65; Pet. 65. The evidence and arguments Petitioner adds to address claims 1–5, 6, 7, 10, 12–17, 19, and 20–30 do not cure the deficiencies, discussed above in Section II.C.4, in Petitioner's assertions that claims 8 and 9 would have been obvious over Lumidigm, Scharf, and Kotanagi. Petitioner has not demonstrated a reasonable likelihood of establishing that any of claims 1–5, 6, 7, 10, 12–17, 19, and 20–30 would have been obvious over Lumidigm, Scharf, Kotanagi, and Tran.

[5] In contrast to page 4 of the Petition, Page 49 of the Petition includes claim 18 among those that Petitioner contends is allegedly obvious over Lumidigm, Scharf, Kotanagi, and Tran. But the section of the Petition discussing the details of the challenge based on Lumidigm, Scharf, Kotanagi, and Tran does not further discuss claim 18. *See* Pet. 49–87. Accordingly, the statement on page 49 of the Petition that claim 18 would have been obvious over Lumidigm, Scharf, Kotanagi, and Tran appears to be a typographical error.

MASIMO 2009
Apple v. Masimo
IPR2024-00244

E. ALLEGED OBVIOUSNESS OF CLAIM 11 OVER LUMIDIGM, SCHARF, KOTANAGI, TRAN, AND FORSTALL

1. *Overview of Forstall*

Forstall discloses a portable multifunction device that, in some embodiments, "has a touch-sensitive display (also known as a 'touch screen') with a graphical user interface (GUI), one or more processors, memory and one or more modules, programs, or sets of instructions stored in the memory for performing multiple functions." Ex. 1017, 2:36–43. Forstall's Figure 2 is reproduced below.

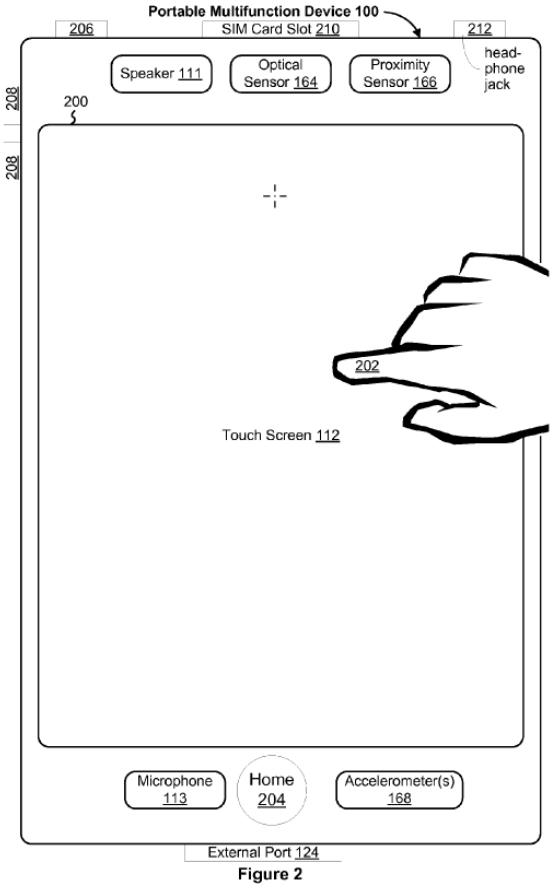

Figure 2

Figure 2 "illustrates a portable multifunction device having a touch screen in accordance with some embodiments." *Id.* at 4:7–8.

In particular, Figure 2 shows portable multifunction device 100, which includes touch screen 112. *Id.* at 14:66–15:1. Inside user interface

MASIMO 2009
Apple v. Masimo
IPR2024-00244

200, touch screen 112 may present one or more graphics. *Id.* at 15:1–2. "[A] user may select one or more of the graphics by making contact or touching the graphics, for example, with one or more fingers 202." *Id.* at 15:3–5. Forestall explains that

> [a] graphical user interface one a portable multifunction device with a rectangular touch screen display with a portrait view and a landscape view comprises a first mode of an application that is displayed in the portrait view and a second mode of the application that is displayed in the landscape view.

Id. at 18:59–64. Forstall adds that

> mode changes based on device orientation make the device easier to use because the user does not have to navigate through one or more display screens to get to a desired second mode or remember how to perform such navigation. Rather, the user changes the orientation of the device (e.g., from vertical or portrait to horizontal or landscape) to transition an application to a corresponding second mode.

Id. at 19:4–10.

2. *Discussion*

Claim 11 depends indirectly from independent claim 8. Ex. 1001, 46:4–12. Petitioner's challenge of claim 11 based on Lumidigm, Scharf, Kotanagi, Tran, and Forstall cites Forstall because it allegedly "discloses a portable device with a touch screen user interface with orientation capability." Pet. 87. Based on this and arguments that it would have been obvious to add Forstall's disclosures to those of Lumidigm, Scharf, Kotanagi, and Tran, Petitioner argues that "[t]he ***orientation of the user interface*** of the touch screen of the combination device (e.g., orientation from vertical/portrait to horizontal/landscape)) is dependent on ***user input*** (e.g., the user changes the orientation of the device)." *Id.* at 89. Petitioner's arguments and evidence regarding the alleged obviousness of claim 11 over

MASIMO 2009
Apple v. Masimo
IPR2024-00244

Lumidigm, Scharf, Kotanagi, Tran, and Forstall do not cure the deficiencies, discussed above in Section II.C.4, in Petitioner's assertions that independent claim 8 would have been obvious over Lumidigm, Scharf, and Kotanagi. Petitioner has not demonstrated a reasonable likelihood of establishing that claim 11 would have been obvious over Lumidigm, Scharf, Kotanagi, Tran, and Forstall.

F. ALLEGED OBVIOUSNESS OF CLAIM 18 OVER LUMIDIGM, SCHARF, KOTANAGI, AND ANDERSON

1. *Overview of Anderson*

Anderson relates to "transparent substrates, in particular glass substrates, which are provided with coatings composed of one or more thin films . . . designed to give specific properties to the substrates which bear them, for example, thermal, optical, or electrical properties." Ex. 1018, 1:5–10. Anderson explains that an "anti-reflection coating" works to decrease a substrate's light reflection factor, thereby "increasing its light transmission factor." *Id.* at 1:22–28. This increases the visibility of objects behind the substrate. *Id.* at 1:28–30. An anti-reflection coating may be a stack of certain materials. *Id.* at 5:1–6. Additionally, including a conductive material film in the stack can provide an anti-static function. *Id.* at 5:32–38.

2. *Discussion*

Claim 18 recites "[t]he user-worn device of claim 8, wherein the windows comprise a conductive material." Ex. 1001, 46:29–30. Petitioner's challenge of claim 18 based on Lumidigm, Scharf, Kotanagi, and Anderson cites Anderson because it allegedly discloses a coating with "'a film of a conductive material' *e.g.*, 'a material of the doped metal oxide type, such as tin-doped indium oxide ITO.'" Pet. 90. Based on this and arguments that it

MASIMO 2009
Apple v. Masimo
IPR2024-00244

would have been obvious to add Anderson's disclosures to those of Lumidigm, Scharf, and Kotanagi, Petitioner argues that "[i]n the combination, ***the windows include*** an anti-reflection coating containing a '***conductive material***,' such as '**a material of the doped metal oxide type, such as tin-doped indium oxide ITO**,' as taught by Anderson, on at least one surface." *Id.* at 92. Petitioner's arguments and evidence regarding the alleged obviousness of claim 18 over Lumidigm, Scharf, Kotanagi, and Anderson do not cure the deficiencies, discussed above in Section II.C.4, in Petitioner's assertions that independent claim 8 would have been obvious over Lumidigm, Scharf, and Kotanagi. Petitioner has not demonstrated a reasonable likelihood of establishing that claim 18 would have been obvious over Lumidigm, Scharf, Kotanagi, and Anderson.

III. CONCLUSION

Because we determine that the information presented in the record does not establish there is a reasonable likelihood that Petitioner would prevail with respect to at least one challenged claim of the patent '648 patent, we do not institute an *inter partes* review.

IV. ORDER

For the reasons given, it is:

ORDERED that the Petition is *denied* as to all challenged claims of the '648 patent and no trial is instituted.

MASIMO 2009
Apple v. Masimo
IPR2024-00244

For PETITIONER:
W. Karl Renner
Andrew Patrick
Daniel D. Smith
Hyun Jin In
Grace Kim
Gretchen DeVries
Fish & Richardson P.C.
IPR50095-0042IP1@fr.com
PTABInbound@fr.com
axf-ptab@fr.com
patrick@fr.com
in@fr.com
gkim@fr.com
dsmith@fr.com
devries@fr.com

For PATENT OWNER:

Irfan A. Lateef
Brian C. Claassen
Jarom D. Kesler
Jacob L. Peterson
Douglas Wentzel
Knobbe, Martens, Olson, & Bear, LLP
2swl@knobbe.com
2jzk@knobbe.com
2ial@knobbe.com
2bcc@knobbe.com
2jup@knobbe.com
2dxw@knobbe.com

MASIMO 2009
Apple v. Masimo
IPR2024-00244