US006907566B1

(12) **United States Patent**
McElfresh et al.

(10) **Patent No.: US 6,907,566 B1**
(45) **Date of Patent: Jun. 14, 2005**

(54) **METHOD AND SYSTEM FOR OPTIMUM PLACEMENT OF ADVERTISEMENTS ON A WEBPAGE**

(75) Inventors: **Charles McElfresh**, San Marino, CA (US); **Paul Mineiro**, Los Angeles, CA (US); **Michael Radford**, Los Angeles, CA (US)

(73) Assignee: **Overture Services, Inc.**, Pasadena, CA (US)

(*) Notice: Subject to any disclaimer, the term of this patent is extended or adjusted under 35 U.S.C. 154(b) by 0 days.

(21) Appl. No.: **09/285,929**

(22) Filed: **Apr. 2, 1999**

(51) **Int. Cl.**[7] **G06F 17/00**
(52) **U.S. Cl.** **715/517**; 705/14
(58) **Field of Search** 715/517, 501.1, 715/513; 705/14, 17

(56) **References Cited**

U.S. PATENT DOCUMENTS

5,659,732 A		8/1997	Kirsch	395/605
5,664,115 A		9/1997	Fraser	
5,704,060 A		12/1997	Del Monte	
5,717,923 A		2/1998	Dedrick	396/613
5,724,424 A		3/1998	Gifford	380/24
5,724,521 A		3/1998	Dedrick	395/226
5,724,524 A		3/1998	Hunt et al.	395/237
5,748,954 A		5/1998	Mauldin	395/610
5,752,238 A		5/1998	Dedrick	705/14
5,768,521 A		6/1998	Dedrick	395/226
5,778,367 A		7/1998	Wesinger, Jr. et al.	
5,794,210 A		8/1998	Goldhaber et al.	
5,826,241 A		10/1998	Stein et al.	705/26
5,848,397 A	*	12/1998	Marsh et al.	705/14
5,848,407 A		12/1998	Ishikawa et al.	707/2
5,852,820 A		12/1998	Burrows	707/2
5,855,008 A		12/1998	Goldhaber et al.	705/14
5,862,223 A		1/1999	Walker et al.	

(Continued)

FOREIGN PATENT DOCUMENTS

JP	11316764 A	11/1999
WO	WO 97/22066 A1	6/1997
WO	WO 00/16218 A1	3/2000

OTHER PUBLICATIONS

Ebay—Your Personal Trading Community, Seller Service Listings, dated Apr. 28, 1999, printed from the Internet at: http://web.archive.org/web/19990428111841/www.ebay.com/, 18 pages.

Brin, Sergey et al., "The Anatomy of a Large Scale Hypertextual Web Search Engine", *Computer Networks and ISDN Systems*, North Holland Publishing, Amsterdam, NL, dated Apr. 14, 1998, pp. 1–20.

Doran, David, "Search Engines . . . . Their popularity, their secrets, their flaws", *Entrepreneur*, Jul. 1998, p. 18.

Glaser, Ken, "who Will GoTo.com?", *Online Press.com*, dated Feb. 20, 1998, 2 pages.

(Continued)

Primary Examiner—Sanjiv Shah
(74) *Attorney, Agent, or Firm*—Brinks Hofer Gilson & Lione

(57) **ABSTRACT**

A method and system for placement of graphical objects on a page to optimize the occurrence of an event associated with such objects. The graphical objects might include, for instance, advertisements on a webpage, and the event would include a user clicking on that ad. The page includes positions for receipt of the object material. Data regarding the past performance of the objects is stored and updated as new data is received. A user requests a page from a server associated with system. The server uses the performance data to derive a prioritized arrangement of the objects on the page. The server performs a calculation regarding the likelihood that an event will occur for a given object, as displayed to a particular user. The objects are arranged according to this calculation and returned to the user on the requested page. The likelihood can also be multiplied by a weighting factor and the objects arranged according to this product.

31 Claims, 7 Drawing Sheets

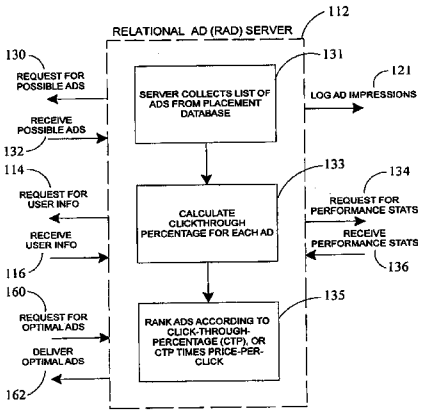

U.S. PATENT DOCUMENTS

5,864,845	A		1/1999	Voorhees et al.	707/5
5,864,846	A		1/1999	Voorhees et al.	707/5
5,903,882	A		5/1999	Asay et al.	705/44
5,918,014	A		6/1999	Robinson	395/200.49
5,920,854	A		7/1999	Kirsch et al.	707/3
5,920,859	A		7/1999	Li	707/5
5,930,777	A		7/1999	Barber	705/40
5,945,975	A	*	8/1999	Lundrigan et al.	345/133
6,078,866	A		6/2000	Buck et al.	702/2
6,078,916	A		6/2000	Culliss	
6,128,599	A		10/2000	Walker et al.	
6,185,558	B1		2/2001	Bowman et al.	707/5
6,269,361	B1		7/2001	Davis et al.	707/3
6,278,966	B1	*	8/2001	Howard et al.	703/23
6,285,987	B1		9/2001	Roth et al.	
6,286,005	B1	*	9/2001	Cannon	707/100
6,311,185	B1	*	10/2001	Markowitz et al.	707/10
6,366,918	B1	*	4/2002	Guttman et al.	707/100
6,411,936	B1		6/2002	Sanders	
6,470,269	B1	*	10/2002	Adar et al.	701/219
6,487,538	B1	*	11/2002	Gupta et al.	705/14
6,594,641	B1		7/2003	Southam	
6,714,975	B1	*	3/2004	Aggarwal et al.	709/224
2001/0014868	A1		8/2001	Herz et al.	
2002/0004735	A1		1/2002	Gross	

OTHER PUBLICATIONS

Kramer, Ralf et al., "Thesaurus federations: loosely integrated thesauri for document retrieval in networks based on Internet technologies", *Int. J. Digit Libr*, 1997, pp. 122–131.

Sullivan, Danny, "GoTo Sells Positions", The:*Search Engine Report*, dated Mar. 3, 1998, 4 pages.

"GoTo.com Announces First Round of Financing, Totaling More Than $6 Million, Led by Draper Fisher Jurvetson", *Business Wire*, dated May 19, 1998, printed from Dialog Gale Group New products, 2 pages.

"New Service Puts Ad Auction, Search Engine Under One Roof", *Electronic Advertising & Marketplace Report*, dated Apr. 28, 1998, vol. 12, Issue 8, 2 pages.

News of The Week articles, *Telephony*, May 1, 1995, pp. 8 and 10.

Nuts 'N Bolts articles, *Target Marketing*, Oct. 1997, 1 page.

DoubleClick TestIt!, obtained at the internet address: http://web/archive.org/web/19980205034316/www.doubleclick.com/nf/adinfo/testiset.htm, dated Oct. 16, 2002, 4 pages.

DoubleClick Frequently Asked Questions, obtained at the internet address: http://web.archive.org/web/19980205033925/www.doubleclick.com/nf/adinfo/facts/htm, dated Oct. 16, 2002, 5 pages.

"New Service Puts Ad Auction, Search Engine Under One Roof", article from Electronic Advertising & Marketplace Report, *Simba Information, Inc.* Apr. 28, 1998, 2 pages.

Google Search, communication from Jeffrey Brewer at Jeffrey@goto.com, titled "Need reverse stemming software", dated May 27, 1998, obtained at the internet address: http://groups.google.com/groups?selm=356CEE4A8DE882A8%40goto.com, on Dec. 19, 2002. 1 page.

Ketchpel, Steven P. et al. "U–PAI: A Universal Payment Application Interface", conference material article from the Second USENIX Workshop on Electronic Commerce Proceedings, Oakland, California, Nov. 18–21, 1996, 17 pages.

Schwartz, Randal L., "Click–Through Tracking in Perl", *Web Techniques*, dated May 1998, located at the internet address: www.webtechniques.com, 3 pages.

Van Roeden, Adriaan, "Your Own Search Engine With SWISH, A Custom Search Facility For Your Web Site", *Web Techniques*, dated Nov. 1996, located at the internet address: www.webtechniques.com, pp. 63–66 pages.

Full Catalog—Categories Menu, Sun Microsystems Sun Solutions Catalog, obtained at the internet address: http://web.archive.org/web/19981205110211/solutions.sum.com/catalogs/all/index.htm, printed on Dec. 19, 2002, 2 pages.

Help on Making Queries—Search by Company or Product, obtained at the internet address: http://web.archive.org/web/19981203050002/solutions.sun.com/search–help.htm, printed on Dec. 19, 2002, 4 pages.

Online Updating, Sun Microsystems Sun Solutions Catalog obtained at the internet address: http://web.archive.org/web/19990220190636/solutions.sun.com/editmodule/help.html, printed on Dec. 19, 2002, 2 pages.

* cited by examiner

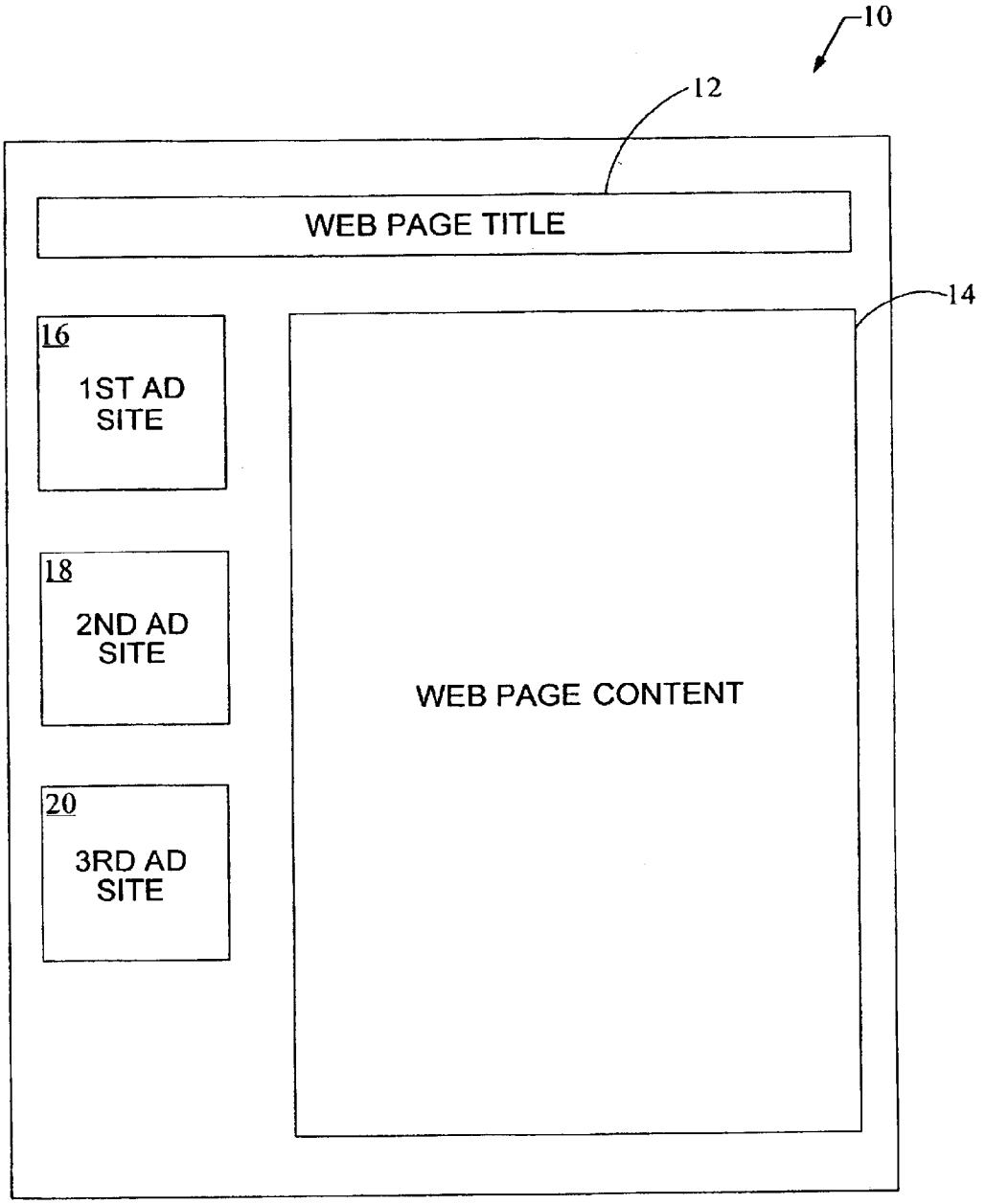

Fig. 1
(Prior Art)

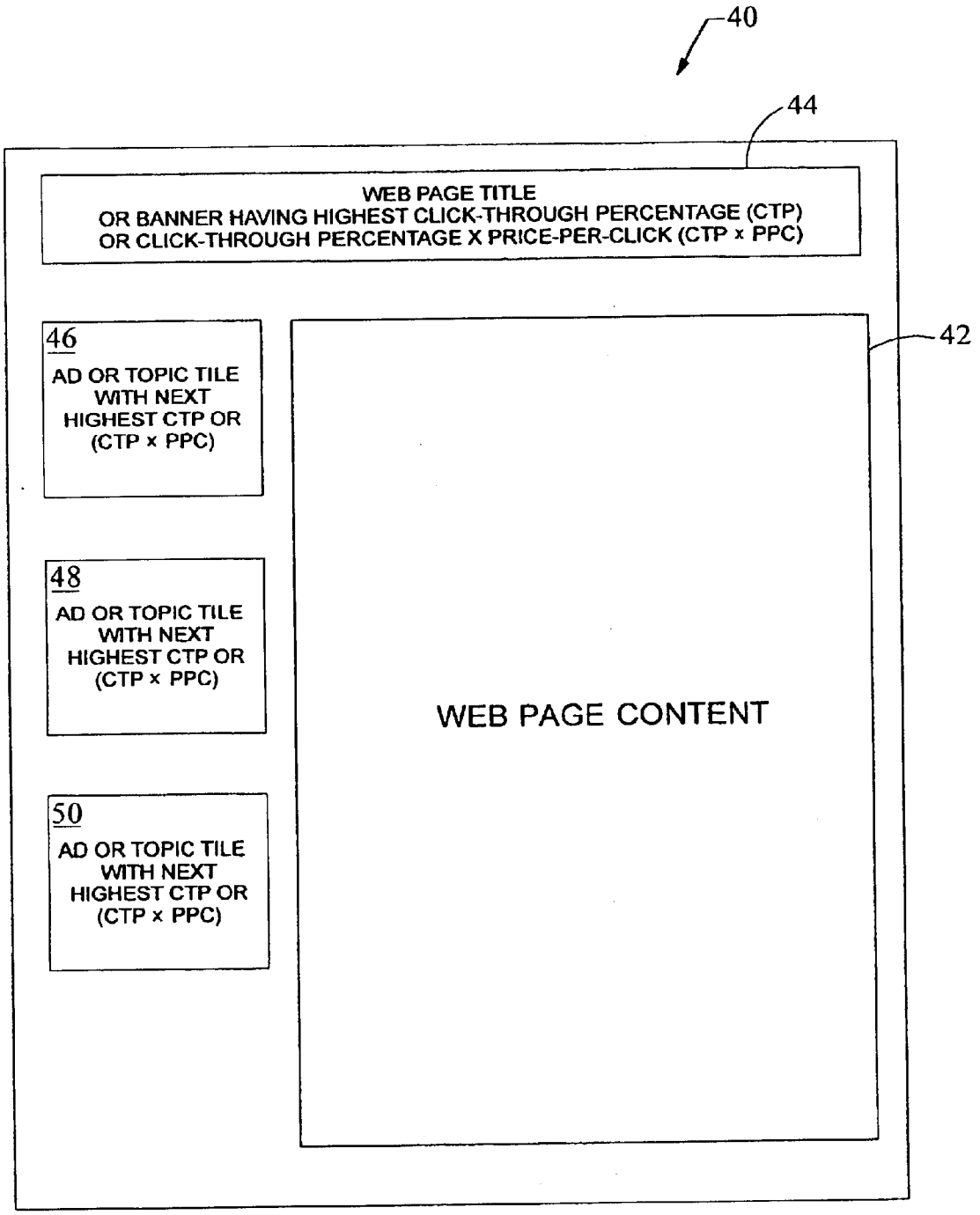
40
44
WEB PAGE TITLE
OR BANNER HAVING HIGHEST CLICK-THROUGH PERCENTAGE (CTP)
OR CLICK-THROUGH PERCENTAGE X PRICE-PER-CLICK (CTP x PPC)
42
46
AD OR TOPIC TILE WITH NEXT HIGHEST CTP OR (CTP x PPC)
48
AD OR TOPIC TILE WITH NEXT HIGHEST CTP OR (CTP x PPC)
50
AD OR TOPIC TILE WITH NEXT HIGHEST CTP OR (CTP x PPC)
WEB PAGE CONTENT

Fig. 2

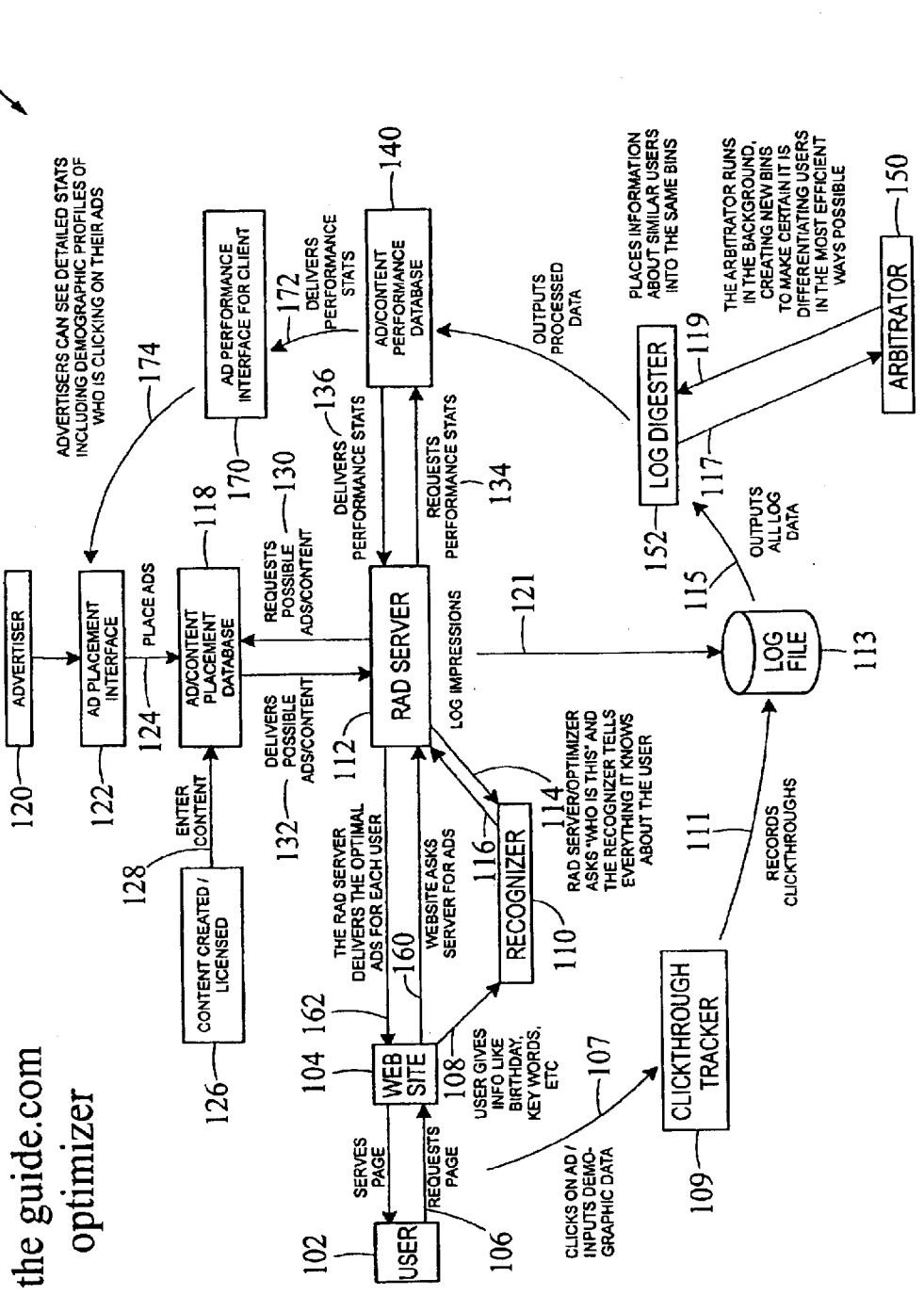
100
the guide.com optimizer
ADVERTISER
120
AD PLACEMENT INTERFACE
122
PLACE ADS
124
AD/CONTENT PLACEMENT DATABASE
118
ENTER CONTENT
128
CONTENT CREATED / LICENSED
126
ADVERTISERS CAN SEE DETAILED STATS INCLUDING DEMOGRAPHIC PROFILES OF WHO IS CLICKING ON THEIR ADS
174
AD PERFORMANCE INTERFACE FOR CLIENT
170
DELIVERS PERFORMANCE STATS
172
AD/CONTENT PERFORMANCE DATABASE
140
REQUESTS POSSIBLE ADS/CONTENT
130
DELIVERS POSSIBLE ADS/CONTENT
132
DELIVERS PERFORMANCE STATS
136
REQUESTS PERFORMANCE STATS
134
RAD SERVER
112
THE RAD SERVER DELIVERS THE OPTIMAL ADS FOR EACH USER
160
WEBSITE ASKS SERVER FOR ADS
162
WEB SITE
104
SERVES PAGE
REQUESTS PAGE
USER
102
106
USER GIVES INFO LIKE BIRTHDAY, KEY WORDS, ETC
108
RECOGNIZER
110
116
RAD SERVER/OPTIMIZER ASKS "WHO IS THIS" AND THE RECOGNIZER TELLS EVERYTHING IT KNOWS ABOUT THE USER
114
LOG IMPRESSIONS
121
OUTPUTS PROCESSED DATA
PLACES INFORMATION ABOUT SIMILAR USERS INTO THE SAME BINS
LOG DIGESTER
152
119
117
THE ARBITRATOR RUNS IN THE BACKGROUND, CREATING NEW BINS TO MAKE CERTAIN IT IS DIFFERENTIATING USERS IN THE MOST EFFICIENT WAYS POSSIBLE
ARBITRATOR
150
OUTPUTS ALL LOG DATA
115
LOG FILE
113
RECORDS CLICKTHROUGHS
111
CLICKS ON AD / INPUTS DEMO-GRAPHIC DATA
107
CLICKTHROUGH TRACKER
109

Fig. 3A

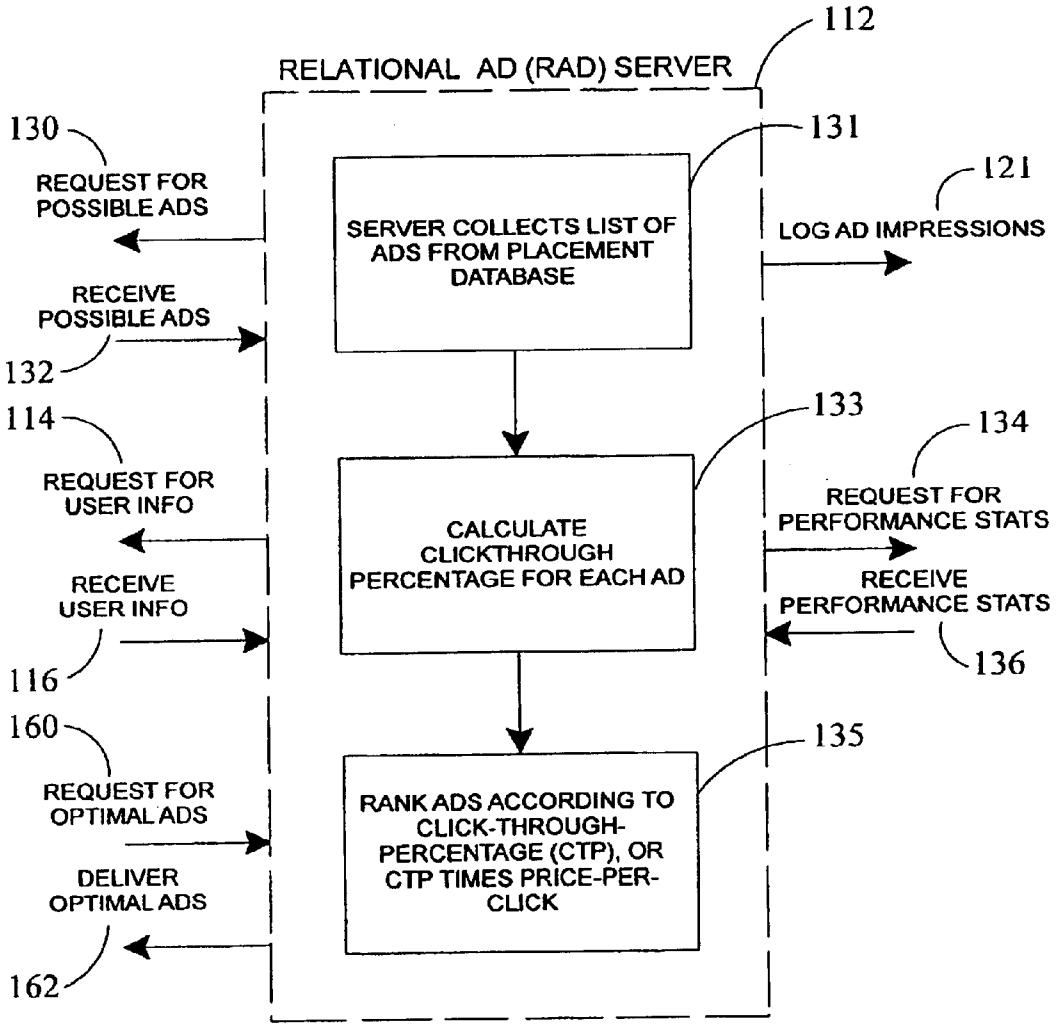
112
RELATIONAL AD (RAD) SERVER
130
REQUEST FOR POSSIBLE ADS
RECEIVE POSSIBLE ADS
132
114
REQUEST FOR USER INFO
RECEIVE USER INFO
116
160
REQUEST FOR OPTIMAL ADS
DELIVER OPTIMAL ADS
162
131
SERVER COLLECTS LIST OF ADS FROM PLACEMENT DATABASE
133
CALCULATE CLICKTHROUGH PERCENTAGE FOR EACH AD
135
RANK ADS ACCORDING TO CLICK-THROUGH-PERCENTAGE (CTP), OR CTP TIMES PRICE-PER-CLICK
121
LOG AD IMPRESSIONS
134
REQUEST FOR PERFORMANCE STATS
RECEIVE PERFORMANCE STATS
136

Fig. 3B

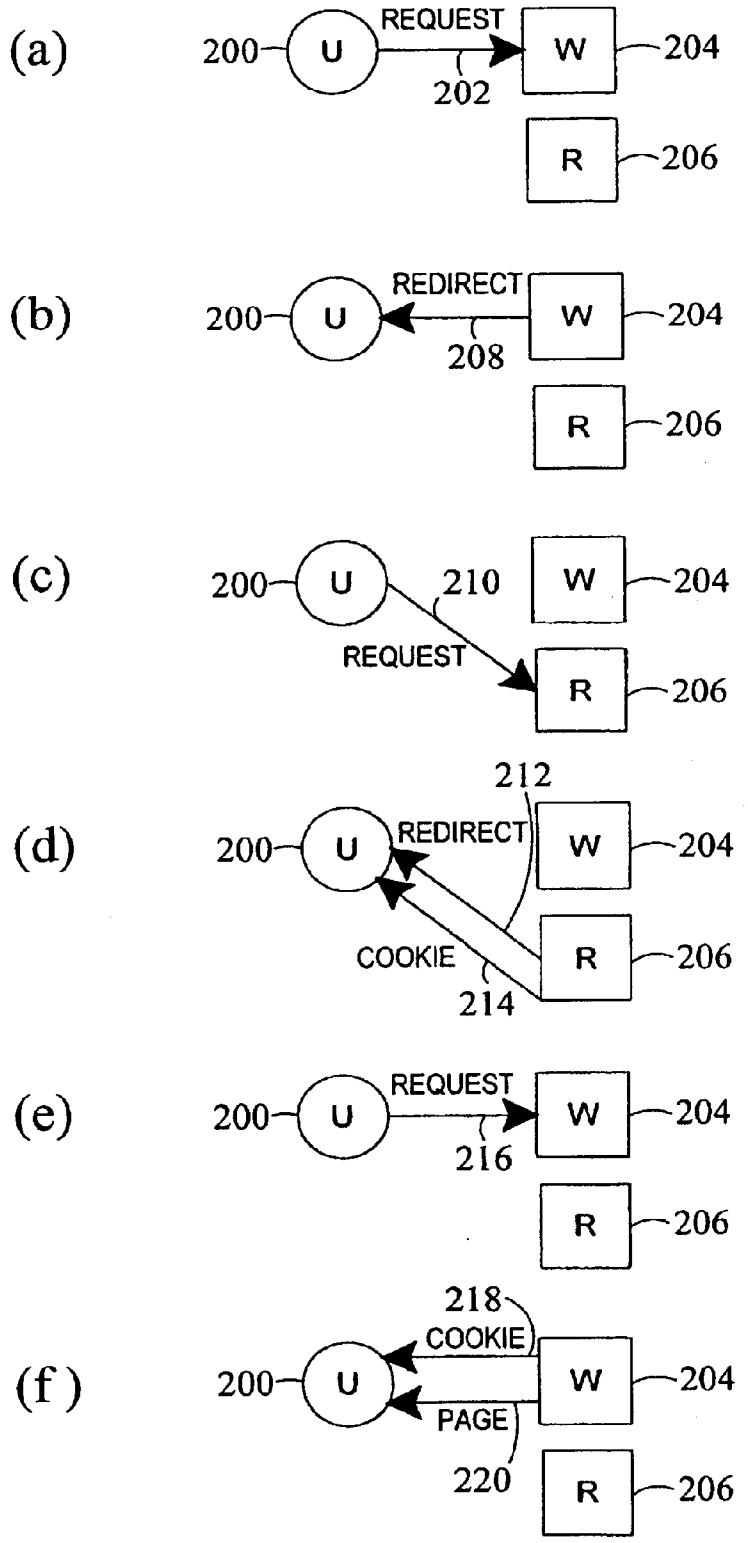
(a)
200
U
REQUEST
202
W
204
R
206
(b)
200
U
REDIRECT
208
W
204
R
206
(c)
200
U
210
REQUEST
W
204
R
206
(d)
200
U
212
REDIRECT
W
204
COOKIE
214
R
206
(e)
200
U
REQUEST
216
W
204
R
206
(f)
200
U
218
COOKIE
PAGE
220
W
204
R
206

Fig. 4

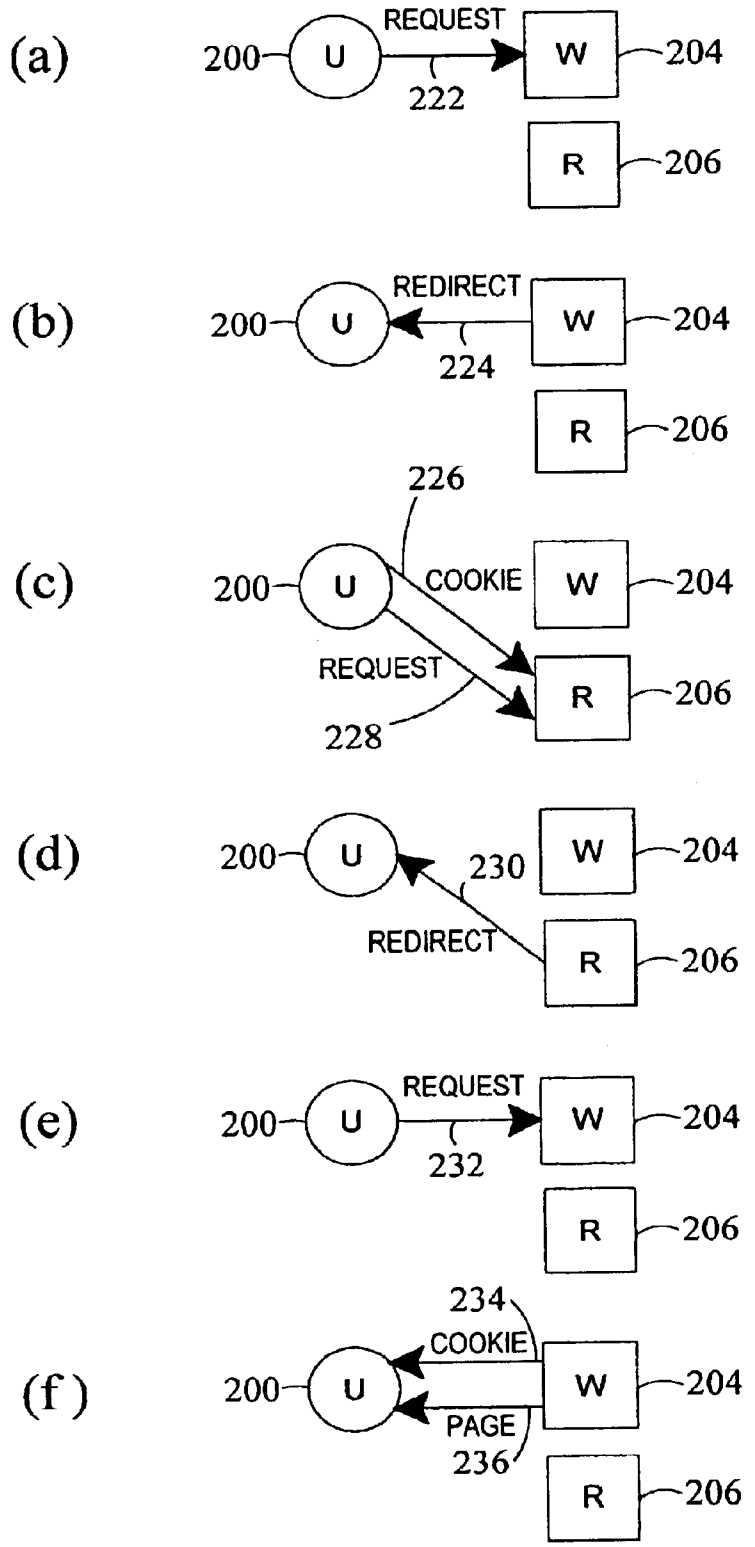
(a)
200
U
REQUEST
222
W
204
R
206
(b)
200
U
REDIRECT
224
W
204
R
206
(c)
226
200
U
COOKIE
W
204
REQUEST
228
R
206
(d)
200
U
230
W
204
REDIRECT
R
206
(e)
200
U
REQUEST
232
W
204
R
206
(f)
234
COOKIE
200
U
W
204
PAGE
236
R
206

Fig. 5

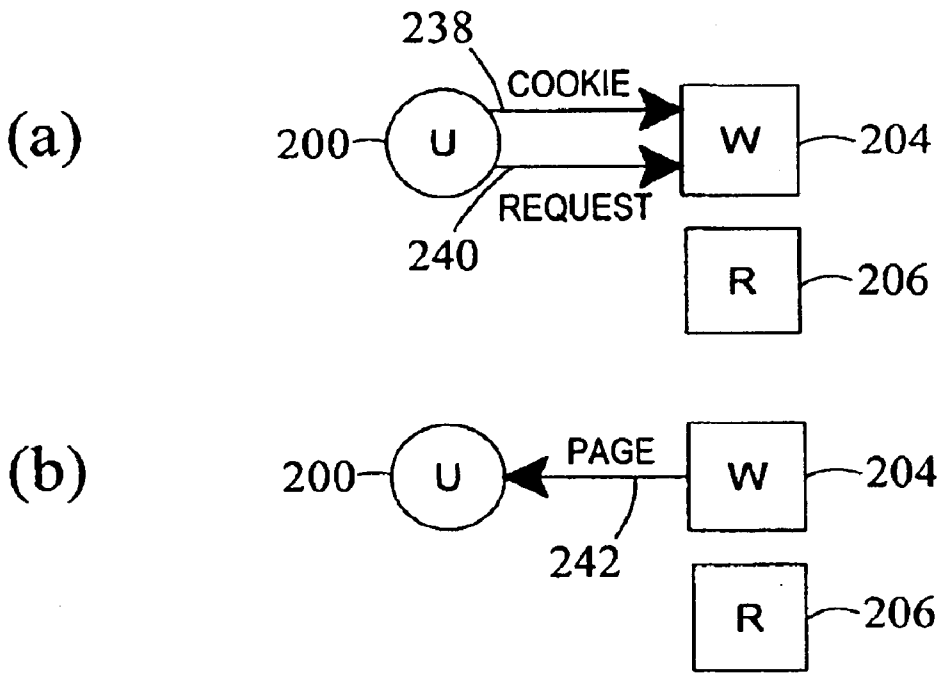
(a)
238
COOKIE
200
U
W
204
REQUEST
240
R
206
(b)
200
U
PAGE
W
204
242
R
206

Fig. 6

METHOD AND SYSTEM FOR OPTIMUM PLACEMENT OF ADVERTISEMENTS ON A WEBPAGE

BACKGROUND OF THE INVENTION

1. Field of the Invention

The present invention relates to a method and system for optimizing the placement of graphical objects, e.g. advertisements (ads), topic tiles, or the like on a page, e.g. a webpage, so that an event associated with the objects is more likely to occur. Such an event would include the incidence of a user identifying, or clicking on the object with a pointing device.

2. Description of Related Art

The Internet provides a fast, inexpensive, and convenient medium for information providers to make information available to users on a website. Information in such websites might include, for example, sports scores, movie reviews, daily news, stock quotations, and the like. While password protected pay-sites exist on the internet, websites can generally be accessed at no cost to the user. This presents a problem regarding revenues returned in relation to providing a website full of information. Some website providers are funded to distribute various information to the public, for example NASA (National Aeronautics and Space Agency) or other such public agencies. Still other providers utilize their website as a commercial means in itself to sell various products, such as books or compact discs. Regardless of such external funding, the generation of revenue from a website is proving to be increasingly important, as there are costs inherent in creating, providing, and maintaining a website. Moreover, as Internet traffic continues to increase, the opportunities for the generation of revenue in association with those contacted sites also tends to increase.

In response to such concerns, website providers are increasing the amount of advertising space on their webpages in order to generate more revenues. The advertisements (or ads) appear as banners, blocks, or tiles on various portions on the webpage. Typically, an advertisement serves as a click-through point to sources of more information about that particular advertiser or topic. In other words, the advertisement exists as a graphical object which has a link to other information. The user typically chooses or identifies the object by clicking on it with a computer pointing device. The identification of the object invokes the link, and hence is often referred to as "click-through."

As with newspapers and other such advertising mediums, factors such as the location and size of the ad on a webpage will affect the price charged. Ads appearing at the start of the webpage will usually command a higher price than ads appearing at the end. This is particularly true for ads which appear further down from the initial webpage screen (as limited by the size of the user's display device). Web browsers usually require the positive act of a user scrolling down a page in order to view an ad located further down from the top. A user who sifts through web pages based upon the initial material visible on the page often overlooks such lower placed ads. Ultimately, each advertiser wants to their ad to be seen, and to increase the amount of click-throughs, or viewing traffic, which visits its particular website or webpages as a result of a click-through on its ad.

Generally, most sites sell their advertising as a function of cost per thousand impressions, where an impression is counted as an instance of the ad appearing on a webpage. Ads can be randomly placed on a webpage, or advertisers

might choose locations on the page. In the latter instance, advertisers might be required to spend considerable time, money, and resources deciding where to place their advertisements, with the hope and anticipation of their ad being noticed, read, and even acted upon by the user. For instance, ads directed to younger Internet users might be placed on websites related to young celebrities, pop culture, or modern music. The ad might need to be placed near the top of the webpage in order to attract attention to the ad. This might require a costly expenditure by the advertiser, and would carry with it no assurances that the ad will attract any significant click-through traffic. As a result, the advertiser might be dissuaded altogether from placing the ad on a particular website or webpage. For every such decision by an advertiser not to place an ad, the revenues for a website or webpage which depends upon such revenues will be adversely affected.

Yet another way of selling advertising on the Internet is by charging the advertiser a certain amount for each click-through that occurs on a particular ad (often referred to as cost-per-click, or CPC). Such pricing structures might ultimately attract more attention from advertisers because the advertiser will not be required to pay unless the ad actually attracts click-through traffic. However, this pricing scheme shifts the impetus for deciding optimum ad placement back to the website or webpage provider, as no revenue will be generated for the provider if the user never clicks upon an ad.

Accordingly, a method and system are needed in this field which will serve to increase the chance of an event occurring for an object which is presented on a page. In the Internet context, a method and system are needed which would increase the amount of click-through traffic on ads presented on a webpage, and thereby increase the revenue generated by a website provider which sells ads on that webpage.

SUMMARY OF THE INVENTION

The present invention provides a method and system for placement of graphical objects on a page to optimize the occurrence of an event associated with such objects. The graphical objects might include, for instance, advertisements on a webpage, and the event would include a user clicking on that ad. The page includes positions for receipt of the object material. Data regarding the past performance of the objects is stored and updated as new data is received. A user requests a page from a server associated with system. The server uses the performance data to derive a prioritized arrangement of the objects on the page. The server performs a calculation regarding the likelihood that an event will occur for a given object, as displayed to a particular user. The objects are arranged according to this calculation and returned to the user on the requested page. The likelihood can also be multiplied by a weighting factor and the objects arranged according to this product.

As applied in context to an Internet based system, the present invention utilizes a unique system of gathering and grouping information about each particular user to the system, and then uses this information to optimize the event, or click-through traffic, for a particular graphical object, e.g. an ad, or set of ads, presented to that user. Optimization is achieved by calculating a click-through-percentage for a particular ad based upon sorted and categorized information about a particular user. This click-through percentage will consist, in part, of an estimation of the likelihood that a particular user will actually click on the ad presented: The click-through percentage is then used to group the ads,

usually in descending order of calculated percentage, in the appropriate spots on a webpage. The ads might also be grouped according to click-through percentage times the cost-per-click for each ad. Topic tiles might also be displayed according to a similar formula, including for instance click-through-rate times the revenue-per-user.

According to either formula for ad placement, the revenue for the website provider will be significantly increased, as each click-through by a user will be more likely to occur, and also the page will be structured to generate an increased amount of revenue for each click-through. It has been found that the random placement of ads on a webpage yields a click-through-percentage of approximately 2–3%. By arranging the ads on a page in descending order of click-through-percentages (e.g. higher to lower), the general click-through rate has been found to at least double. By arranging the ads in descending order of click-through percentages times price-per-click, the overall revenue rate has been found to at least triple.

Other features can be summarized as follows: as a user interacts with various Internet sites, a file of information called a "cookie" is generated and maintained on a user's hard disk. A cookie typically records a user's preferences when using a particular site. A cookie is a mechanism that allows a server to store a file about a user on the user's own computer. The present invention includes providing a website which gathers and utilizes such information from the cookie file, but also generates and maintains a centralized database of information concerning each user. If a user is new to the site, then the user is redirected to areas where information about that user can be gathered. As the user proceeds through various website areas relating to topics such as movies or horoscopes, information such as age or zip codes can be gathered and stored for each particular user under a user identification (ID) number or tag. The data from the users is then analyzed, delineated, and placed in different groupings, or "bins." A device is used which creates meaningful bins, or in other words, bins of persons which have discernable behavioral differences between them. These bins might include, for example, demographical data such as persons of a certain income level, gender, or age grouping. This time intensive task of analyzing user information and creating different bins is performed as a background task, and therefore does not adversely affect the overall speed of the system.

An ad server device is also used which queries the system for information about each particular user. The bins of information are used to calculate a click-through-percentage for each of the various ads available, based upon an analytical method which includes, among other things, parameters relating to the user's information, the categorized bins of data, and the prior performance information for a particular ad. This system will allow multiple bins to be used for a performance calculation without adversely affecting the speed of the calculation. If an ad is new to the system, a performance estimation is made which will allow convergence toward the true performance percentages through subsequent click-throughs and related calculations for that ad. A set of ads is then returned by the ad server for display to a particular user on the contacted website and associated webpages. The performance calculation for each ad, along with its price-per-click, are used to determine placement of the ads on a website for optimum click-through occurrences and generation of revenue.

The system might also include an ad performance interface which will allow an advertising client to access various ad performance information from an ad performance database relating to the click-through-percentage and success of each ad. Yet another interface might be provided which will allow an advertiser to place ads directly into an ad database for access by the ad server.

Therefore, according to one aspect of the present invention, a system is provided wherein a page is requested by a user, with the page has positions for placement of graphical objects. Each object has associated with it a link to other information, and a certain event will invoke that link. Certain performance data is stored regarding the occurrence of events for objects in the system. The performance data is used to calculate a likelihood for each object that the event will occur for that particular user. The page is then returned to the user with a set of graphical objects arranged on the page, the objects positioned according to their event likelihood calculation.

According to another aspect of the present invention, a more specific example is provided. Namely, a system is provided wherein a website and associated webpages are made available by a web server, with the pages having ads arranged to provide optimized click-through generation of revenue deriving from the ads. The system gathers information relating to a user and stores this information in a central database under a user identification tag which is passed back to the user as part of the cookie data. The user data is further grouped into a variety of bins according to behavioral differences associated with such groups. A click-through-percentage is calculated for each ad based upon the user information, the associated bins, and the prior click-through-percentage associated with the ad. The ads are arranged on the webpage in descending order according to the calculated click-through-percentage for each ad.

According to another aspect of the present invention described above, the ads are arranged on the webpage in descending order according to the calculated click-through-percentage for each ad times the click-through-price for each ad.

Another aspect of the present invention described above displays topic tiles in descending order according to click-through-rate for a particular tile, times the revenue-per-user.

In still another aspect of the present invention described above, the device which groups the user data into a variety of bins is configured to perform its task periodically in the background, thereby minimizing slow down of the overall system.

Yet another aspect of the present invention provides an ad performance database, and an interface for the advertising client to access the performance database and review the performance parameters relating to a particular ad displayed according to this method.

A further aspect of the present invention provides an ad content and placement database, and an interface for the advertising client to place ads directly into the system.

Other aspects and advantages of the present invention can be seen upon review of the figures, the detailed description, and the claims which follow.

BRIEF DESCRIPTION OF THE FIGURES

FIG. **1** is an example of a prior art webpage in which ad sites are arranged to randomly receive placement of ads.

FIG. **2** is an example of a webpage according to the present invention in which the ads (or topic tiles) are arranged in descending order by their click-through-percentage (CTP) or CTP times price-per-click (CPC).

FIG. **3**(*a*) is a block diagram of the functional components used for arranging the ads according to FIG. **2**.

FIG. **3**(*b*) is a block diagram of the Relational Ad (RAD) Server component of FIG. **2**.

FIG. **4** is a block diagram of a sequence of interactions between the user, web site, and Recognizer elements of FIG. **3**(*a*), wherein a user is new to the optimizer network.

FIG. **5** is a block diagram of a sequence of interactions between the user, web site, and Recognizer elements of FIG. **3**(*a*), wherein a user is new to the web site, but is already recognized by the optimizer network.

FIG. **6** is block diagram of a sequence of interactions between the user, web site, and Recognizer elements of FIG. **3**(*a*), wherein a user has already visited the web site, and is already recognized by the optimizer network.

DETAILED DESCRIPTION

The present invention provides a method and system for optimizing the event occurrences for graphical objects on a page. More specifically and for discussion purposes, a method and system are provided for optimizing revenues generated by a webpage. Optimization occurs through ranking of the ads (or topics) according to a click-through-percentage generated for each ad. The page might further be optimized by ranking the ads according to cost-per-click multiplied times the click-through-percentage. This will create a webpage that has both a high likelihood of click-throughs, and maximum revenue for each click-through that actually occurs. A detailed description of the invention is provided with respect to FIGS. **1**–**6**.

FIG. **1** shows a generalized block diagram layout of a prior art webpage **10**. This page contains a web page title block **12**, and a web page content block **14**. A sequence of ad sites **16**–**20** are shown which receive and display ads configured to fit in these spots. In the past, such ads have been placed on the page according to an advertisers preferred (and/or paid for) page location. Alternatively the ads have been randomly placed upon the page, with some consideration for not repeating ads which a user might have seen before.

The randomized placement of ads on a webpage has been found to result in a click-through-percentage for each ad of approximately 2–3%.

FIG. **2** shows an example block diagram layout of a webpage **40** according to the present invention. A generalized web page content block **42** is shown in the right-center of page **40**. In addition, the peripheral blocks for placement of ads, or topic tiles, are arranged in order to maximize revenue generation for the webpage. Note that a topic tile might consist of a click-through point for more sites and information about a particular topic, including for instance horoscopes or personals ads. In one embodiment, the most prominent block on the page, e.g. the uppermost banner block **44**, will carry ads that have the highest probable click-through-percentage for a particular user. Ads with the next highest calculated click-through-percentage will be displayed in the next most prominent spot on the page, and so forth. The ads are typically grouped from top to bottom in descending order of calculated click-through-percentage, as shown by blocks **46**–**50**. If an ad spot is designated as more prominent, i.e. the ad spot is located in the unscrolled center of the user's display, then the click-through-percentage ranking and display of ads will follow the relative prominence designations for a particular page. Webpages arranged according to this method have been found to generate at least twice the revenue of webpages having randomly place ads.

In yet another embodiment, the ads can also be sorted and displayed according to a method which multiplies the calculated click-through-percentage times the cost-per-click for each ad. Under this method, the cost that the advertiser pays for each individual click-through on an ad will factor into the placement of the ad on the webpage. A more expensive ad with a moderate click-through-percentage might earn a more prominent position than an ad with a high click-through-percentage, but having a low price-per-click. If the multiplied result of the two factors produces a higher number, than the revenue generated from display of that particular ad will also be higher. Hence, such an ad will be displayed in more prominent position on the webpage in order to encourage more click-throughs by the user. Webpages arranged according to this method have been found to generate at least three times the revenue per page over webpages having randomly placed ads.

FIG. **3**(*a*) shows a block diagram of a system or network **100** for optimizing placement of ads on a webpage according the arrangement methods described above. While the elements are discussed in a certain order below, many of the processes occur simultaneously, or in other order sequences as necessary. As shown, a user **102** contacts a website **104** and requests a page **106**. During the process of interacting with the web site, the user **102** will provide personal information **108** such as their birthday, gender, zip code, and the like. This information is sent from the web site **104** to a component used for recognizing certain characteristics about a user, hence referred to as the Recognizer **110**. Depending upon the status of the user (e.g. new to the network, new to the website, or known by the system), the interactions of the user, website, and Recognizer will vary. A centralized database is used, however, to store various information which has been collected about a user. The information is accessible via a user identification (Id) tag or number, which is created for each user. The interactions of the user, website, and Recognizer are detailed further in the discussion of FIGS. **4**, **5**, and **6** below.

In essence, when a site wants to show a page, it contacts an ad server component **112**, shown at the center of the network **100** in FIG. **3**(*a*). This device might also be referred to as a relational server component, and is hence referred to as the Rad Server. The site contacts the Rad Server and indicates which webpage and website will be shown, as well as the centralized Id of the user who will view the page. The Rad Server **112** performs the overall function of gathering the necessary information regarding a particular ad (or set of ads) and the particular user and generating a set of ads which have been optimized for placement on a webpage according to a calculated click-through-percentage (or click-through-percentage times price-per-click) for that user.

Referring now to both FIGS. **3**(*a*) and **3**(*b*), additional operational steps of the Rad Server are shown. Initially, the Rad Server **112** will query the Recognizer **110** for as much information **114** as is known about the particular user. The Recognizer then returns the information requested **116** back to the Rad Server **110** for use in requesting possible ads for placement and performing ranking calculations regarding those ads.

In order for the optimizer system to have ready access to a large store of ads, an ad/content placement database **118** is provided for storing a plurality of ads, which might be used for possible display. The ad/content placement database **118** might contain, for example, information about each ad contract, e.g. price per impression, price-per-click-through, constraints on pages or positions where the ad may be placed, and/or constraints on demographic variables which must hold for the ad to be presented. The database **118** might also contain information associated with different page layouts, e.g. the number of banner or ad spots available.

Such ads are created and/or purchased by the advertiser **120** who might use an ad placement interface **122** (which is optional) to place ads **124** in the database **118**. The interface **122** could be web accessible and would guide the advertiser **120** through the necessary steps for creating and uploading an ad into the database **118**. Alternatively, the general content of the ads is created and/or licensed **126** by administrators of such accounts and entered **128** into the ad/content placement database **118**. The Rad Server **112** requests possible ads or content material **130** based upon information from the particular user **102** from the ad/content placement database **118**. The database **1118** then returns the possible ads **132** for placement on the webpage that fit the particular characteristics of the user **102**.

With the possible ads **132** now collected, as shown by element **131** in FIG. **3**(*b*), the Rad Server **112** performs a click-through percentage calculation for each ad, as shown by element **133** in FIG. **3**(*b*). This calculation further requires access to performance information for each ad. Accordingly, an ad/content performance database **140** is provided which stores click-through-percentage data for each ad, as well as data concerning the grouping of users into different categories, or bins. A processing device, hereafter referred to as the Arbitrator **150**, takes information gathered and stored about the users and processes this information into useful bins. The user data is sampled and bins are continually created which differentiate users in optimal ways for placement of ads. For example, a bin of all users under 14 years old might be created as one separate bin, rather than all users under 18 years old. This strategy for categorizing users becomes important when trying to predict or calculate a click-through-percentage for a given ad, or set of ads.

Referring again to FIG. **3**(*a*), when a user clicks on a particular ad as shown by **107**, a click-through tracker **109** is provided to track and then record the click-throughs **111** into a log file **113**. The log file **113** also collects ad impression data **121** from the Rad Server **112**. The log file **113** outputs the log data **115** into a device referred to as a log digester **152**. The log digester **152** interacts with the Arbitrator **150**, as shown by dataflows **117** and **119**. The log digester **152** processes through all the user data, and places each bit of user data in its appropriate bin according to directions from the Arbitrator **150**. The Arbitrator **150** runs periodically to determine how best to differentiate among users. The more differences that the Arbitrator finds, then the more efficiently it will be able to deliver ads that users will click on, or content that users will enjoy. Both the Arbitrator **150** and log digester **152** functions are generally time intensive operations and can take significant processing resources. In this embodiment, these tasks are shown to run in the background so as not to slow down the overall system performance. Typically, the Arbitrator **150** will be configured to interact with the log digester **152** every 15 minutes or less and the log digester **152** will output processed data to the ad/content performance database **118**. The ad/content performance database **118** is therefore a static database that is updated periodically from the log digester **152**. The update rate is variable and can be further improved through via system code optimization, increased processor speeds, dedicated hardware, and the like.

Referring again to FIGS. **3**(*a*) and **3**(*b*), the Rad Server **112** sends a request **134** for performance statistical data (or performance stats) to the Ad/Content performance database **140** and the requested performance stats **136** are returned to the Rad Server **112**. A click-through-percentage **133** is calculated for each ad based upon the performance stats and the user information. The Rad Server **112** thereafter ranks the ads according to a desired arrangement method **135**. While other equivalent methods are intended to be included within the scope of this invention, the methods discussed above include arranging the ads according to: click-through-percentage; or click-through-percentage times price-per-click for each ad. Topical tiles might also be arranged according to the click-through-rate for each topic, times the revenue-per-user.

Referring again to FIG. **3**(*a*), the website **104** requests ads from the Rad Server **112** as shown by dataflow **160**. After the steps described above are performed, the Rad Server **112** delivers a set of ads for display to the user which have been optimized for increased click-throughs, and/or increased revenue generation for the webpage provider.

Yet another interface **170** might (optionally) be provided which would provide the Advertiser **120** with the ability to monitor and track the performance of their ads. The ad performance interface **170** would collect performance stat data **172** from the ad/content performance database **140**. The interface would thereafter provide user-friendly and viewable data **174** to the client regarding detailed stats, including for instance demographic profiles of who is clicking on their ads. Such information could prove invaluable to the advertiser for targeting future customers with particular ads. The information would also serve to demonstrate the success rate, and thereafter aid in setting the pricing structure of ads, in order for the network provider to further increase revenues.

The optimizer **100** further uses a unique sequence of steps to gather information from each particular user. These sequences are shown in FIGS. **4**, **5**, and **6**. Normally, a cookie is used by websites to detect information about a user. A cookie is a special text file that a website stores on the user's harddrive. Typically a cookie records a user's preferences when using a particular site. Using the Internet's Hypertext Transfer Protocol (HTTP), each request for a webpage is independent of all other requests. For this reason, the webserver generally has no memory of what pages it has sent to a user, or information about that user. A cookie is a mechanism that allows the server to store its own file about a user on the user's own computer. The file is typically stored in the subdirectory of the browser directory. The cookie subdirectory will contain a cookie file for each website which a user has visited, and which uses cookies. Cookies have been previously used to rotate the ads that a site sends so that a page does not keep sending the same ad as it sends a succession of requested pages. Cookies have also been used to customize pages based upon the browser type. Generally, users must agree to let cookies be saved for them, and such is the common practice as it speeds up web service. Yet another practice is for a user to create a file of personal information, or a profile, for use by a contacted website.

According to the present invention, the previously mentioned centralized Id number or tag is created for each user and provides access to stored information about the user within the optimizer system. When a site learns a new piece of information about a user, e.g. zip code, this information is sent to the Recognizer which enters this information into the centralized database. While many different forms of databasing would provide an equivalent result, the preferred embodiment uses a non-relational database that has been written for scalability and speed. When a site queries the Rad Server for a set of ads to place on a page, the site passes the centralized Id to the Rad Server, which in turn requests any relevant information associated with that user Id from the Recognizer database. The Recognizer database might also

be queried by individual site, e.g. for dynamically targeted content generation. Separate authentication would be provided for read and write access to the Recognizer database.

Hence, when the Rad Server **112** requests user information, then the databased information can be readily provided via the Id. FIG. **4** shows the sequence of steps that occur when a user is new to the network. In step (a) the user (U) **200** sends a request **202** to the web server (W) **204** for a page of information. In step (b), the web server **204** redirects **208** the user **200** to the Recognizer (R) **206**. In step (c), the user request **210** is redirected via a redefined URL (uniform resource locator). The Recognizer **206** assigns a new Id to the user and saves it in a database. In step (d), the Recognizer **206** redirects **212** the user **200** back to the web server **204** with the user Id appended to the URL. The Recognizer **206** also sends a Recognizer cookie file **214** back to the user **200**. In step (e), the user **200** sends a request **216** for the original page desired, but with the Id appended. In step (f), the web server **204** returns its own cookie **218** with the Id, along with the webpage **220**, which the user requested (with the ads optimally arranged).

FIG. **5** shows the sequence of steps which occurs when the user is new to the web server, but has already been databased in the optimizer network. In step (a), the user **200** requests **222** a webpage from the web server. In this instance, the website has not been previously visited by the user. In step (b), the web server **204** redirects the user **200** to the Recognizer **206**. In step (c), the user **200** requests **228** the URL from the Recognizer **206**. Since the user has already visited the optimizer network, they have a cookie **226** which is passed back to the Recognizer **206**. In step (d), the Recognizer **206** redirects **230** the user **200** to the site with the Id appended. In step (e), the user **200** sends a request **2232** for the original page desired, but with the Id appended. In step (f), the web server **204** returns its own cookie **234** with the Id, along with the webpage **236**, which the user requested (with the ads optimally arranged).

FIG. **6** shows a sequence of steps which occurs when the user has already visited an optimizer network site. In step (a), the network has already established a cookie for the user with the centralized Id. The Recognizer **206** is therefore not involved in the interaction. The user **200** sends a request **240** for a webpage to the web server **204**, along with the existing cookie file **238**. In step (b), the web server **204** responds by sending the requested webpage **242** (with the ads optimally arranged).

In each case, the website will request HTML code from the Rad Server **112** to place in the appropriate advertising blocks of the webpage. The Server outputs this information to the user, and the information is thereafter decoded and arranged by the user's web browser. When the user clicks on an ad, they are redirected through optimizer so that the click-through can be counted, and the user is thereafter sent to the URL specified by the Advertiser.

In providing further details to elements described above, the Arbitrator **150** in FIG. **3**(*a*) has the task of creating many different bins of data as characteristics about the users are learned and delineated. Normally, when any new factor (e.g. a new bin) is introduced into a system like the present, the complexity of implementation increases greatly, as each factor will typically need to be multiplied by every other existing factor in the system. As a result, variables must be partitioned into a small number of equivalence classes in order to make feasible the learning problem. This creates pressure towards choosing a small number of bins for each variable. However, in the limit that there is only partition (one type of user), the learning problem is greatly simplified, but the available information is not being maximally exploited for monetary gain. This is the classic "information/complexity" tradeoff in learning theory: the more powerful the model, the more difficult it is to learn the parameters.

While a variety of solutions might be applied, the preferred embodiment of the present invention applies a classical statistical technique for hypothesis testing, i.e. the generalized likelihood ratio test, as follows. Starting with a given a particular random variable X which takes values in the set S_X, and a set of ads A such that for each ad $a \epsilon A$ and value $x \epsilon S_X$, the result includes associated impressions counts $I_X(x,a)$ and click-through counts $C_X(x,a)$. Next, consider a function f: $S_X \rightarrow S_B$ which assigns values in S_X to equivalence class labels in S_B. Associated with each $b \epsilon S_B$ are the impression and click-through counts $I_B(b,a)=\Sigma_{x|f(x)=b} I_X(c,a)$ and $C_B(b,a)=\Sigma_{x|f(x)-b} C(x,a)$, respectively. These counts can be used to assign a score to f for a given ad $a \epsilon A$ via

$$\phi(f, a) = 2\left(\sum_{b \in S_B} \max_{\lambda}\{\log p(I_B(b, a), C_B(b, a), \lambda)\}\right) - 2\max_{\lambda}\left\{\sum_{b \in S_B} \log p(I_B(b, a), C_B(b, a), \lambda)\right\}$$

Where p is standard binomial likelihood given by

$$p(c, n, \lambda) = \binom{n}{c}\lambda^c(1-\lambda)^{n-c}$$

This test can be interpreted as measuring the difference between the "explanatory power" that is achieved by assuming that the click-through rate for the ad in question varies in any fashion across the equivalence classes in question (first term), versus the "explanatory power" obtained by assuming that the click-through rate is identical across equivalence classes (second term).

The asymptotic distribution of ϕ is known to be X^2 with degrees of freedom $|S_B|-1$, which allows proper normalization of the score with respect to number of equivalence classes. The following formula is used to transform ϕ into a random variable approximately distributed as zero-mean unit-variance Gaussian.

$$z(f, a) = \sigma(|S_B| - 1)^{-1}\left(\frac{\phi(f, a)}{|S_B| - 1} = \mu(|S_B| - 1)\right)^{1/3}$$

$$\mu(n) = 1 - \frac{2}{9n}$$

$$\sigma(n) = \sqrt{\frac{2}{9n}}$$

As can be seen from the formula, this normalization discourages partitioning into a large number of equivalence classes (i.e., large $|S_B|$); however, if the increase in explanatory power (i.e., ϕ) is sufficiently large it can overcome this "bias" against fine-grained partitioning. In this manner the information/complexity tradeoff is represented.

The above score is averaged over the current population of ads to assign a score Q to the potential partitioning f, $Q(f)=\Sigma_{a \epsilon A} z(f,a)$. In principle, a procedure to enumerate all possible partitionings and choose the one with the largest score Q is possible, but (currently) in practice a human suggests several possible ways to partition the data, Q is

calculated for each candidate partition, and the partitioning with the highest score is used in the online system. Since the complexity of model supported by the data increases with the amount of data, the appropriate partitioning for the system can change with time, e.g., if the amount of visitors to the site increases dramatically. Thus the arbitrator is used both when first introducing a variable into the system, and for periodically tuning the distinctions the system makes in order to maximize performance.

In providing further detail to certain elements described above, element **133** in FIG. **3**(*b*) describes a click-through-percentage calculation which is performed for each ad. This calculation provides a probability or likelihood, expressed as a percentage, that a user will click on a particular object or ad. While many different processes might be used within the scope of optimizing revenue generation through the placement of ads by using click-through-percentage, the present invention employs the technique further detailed as follows: The value of placing an ad includes a fixed, known amount of revenue per impression (possibly even zero), plus some amount of revenue that would be generated if the ad were clicked on. Since clicking on the an ad is a random event, the Rad server attempts to estimate the average amount of revenue that results from click-throughs, which is given by the probability that the user will click on the ad times the amount of revenue generated when the ad is clicked on. The ad server is therefore attempting to maximize, on average, the revenue resulting from a particular assignment of ads to the page. The ad server estimates the probability of clicking on an ad using formulas derived from Bayesian statistical methodology, which click-through modeled as a binomial process, and with a prior model of advertisement appeal given by exponential distribution parameterized by a single parameter p_0.

First, the system should determine the value of factors used in predicting performance. Demographic information associated with a user Id is retrieved from the Recognizer. Other information is obtained from the site requesting the ad placement, e.g the page the ads will be shown on. Still other information, e.g. the time of day, is determined by the ad server.

Second, for each possible assignment of an ad to a spot on the page, and for each factor whose value is known, the ad server obtains the number of impressions and click-throughs seen for that ad in that spot with the factor in question. These counts are used to estimate the likelihood p that the user will click on the ad, according to the following formula:

$$\hat{p}(q, s, p_0) = \frac{\phi(q, s, p_0)}{\phi(q, s, p_0) + \varphi(q, s, p_0)}$$

$$\phi(q, s, p_0) = \alpha(c(s), i(s), p_0)\prod_{i=1}^{N}\theta(c(s \mid q_i), c(s \mid q_i) + i(s \mid q_i), \theta(c(s \mid q_i), c(s), r(i))$$

$$\varphi(q, s, p_0) = 1(-\alpha(c(s), i(s), p_0))\prod_{i=1}^{N}\theta(n(s \mid q_i) + i(s \mid q_i), \theta(n(s \mid q_i), n(s), r(i))$$

$$\theta(a, b, k) = \frac{a+1}{b+(1/k)}$$

$$\alpha(a, b, p_0) = \eta(b, p_0) - \sqrt{\eta^2(n, p_0) - 8(2+a)p_0}$$

$$\eta(b, p_0) = 2 + (2+b)p_0$$

$$n(s) = i(s) - c(s)$$

$$n(s \mid q_i) = i(s \mid q_i) - c(s \mid q_i)$$

where

q =	context vector
c(s) =	clicks count for content s
i(s) =	impression count for content s
c(s|qi) =	click count for content s given factor i takes value qi
i(s|qi) =	impression count for content s given factor i takes value qi
r(i) =	total possible values for factor i

These equations incorporate the assumptions that factors are conditionally independent, factor values are distributed multinominally with a product exponential prior peaked at a uniform distribution, and that clickthroughs not conditioned on factor values are distributed binomally with an exponential prior peaked at p_0. p_0 is purposely chosen to overestimate the probability of click-through so that the estimator converges to the actual probability of click-through from above. This is particularly true for new ads in which little (or no) information is known. A less efficient system might, for instance, randomize all the ads 20% of the time, then measure the relative performance, and then optimize the placement of ads. The present system, however, proves to be much more efficient as optimization is constantly being performed. The present system serves to automatically balance the opposing goals of gathering data on newer ads and exploiting information about older ads. In this way, the number of impressions is greatly reduced which the system might need to show in order to make an accurate prediction of click-through rate for a particular ad.

Once derived, the list of possible assignments of ads to particular ad spots is sorted in descending order of expected revenue. While there are subsequent empty spots, the ad server examines the next assignment on the list, and accepts the assignment unless it would violate a placement constraint, in which case it is discarded. If possible assignments are exhausted before the page is filled, the Rad Server might then fill the remaining positions with a canonical identifier indicating the spot is to remain empty. The list of acceptable assignments in then returned to the requesting website.

The optimizer system can serve optimized ads to any site on the Internet. In addition to the above-described features, it is intended that the optimizer system will remain able to target ads to specific demographics. For example, the advertiser can target ads only to users between the ages of 25 and 35, or to users who live in zip codes which represent upper-level incomes. Such targeting is independent of the optimization scheme described above. In other words, an advertiser can target any age group it desires, regardless of whether or not that group aligns with one of the aforementioned data bins. Relatedly, the optimizer system can be overridden. If an advertiser wishes to purchase the right to an entire section of the website or webpage, the ads can simply be placed there without having to compete their way into that position on the page.

The foregoing description of a preferred embodiment of the invention has been presented for purposes of illustration and description. It is not intended to be exhaustive or to limit the invention to the precise forms disclosed. Obviously, many modifications and variations will be apparent to practitioners skilled in this art. It is intended that the scope of the invention be defined by the following claims and their equivalents.

What is claimed is:

1. A method of providing placement of a plurality of graphical objects on a page accessible by a user, the graphical objects including graphic and text symbols, the page having positions for receipt of the objects, each object having at least one link to information, the link being

invoked by an event identifying the object by a computer pointing device, the method comprising:

storing and retrieving performance data associated with the likelihood of the event occurring for each object; and

arranging the objects relative to one another on the page according to the performance data.

2. The method according to claim **1**, wherein the performance data is used to calculate a likelihood that the event will occur, and the arranging of the objects is prioritized according to this likelihood calculation.

3. The method according to claim **2**, wherein each object has an associated weighting factor, the likelihood calculation is multiplied times the weighting factor, and the arranging of the objects is prioritized according to this product.

4. The method according to claim **3**, wherein the objects include advertisements and the weighting factor includes the price of the advertisement.

5. The method according to claim **1**, wherein the likelihood calculation includes computing a statistical probability that a user will identify the object.

6. The method of claim **5**, wherein the performance data for the objects has been grouped and sorted according to user characteristics, and the statistical probability is computed based upon the user information, and upon past performance data for that object.

7. The method according to claim **5**, wherein the price of the advertisement is measured by the amount paid by the advertiser for each time a user identifies the advertisement.

8. The method according to claim **1**, wherein the page includes a web page, on at least one website, accessible by an Internet based system, and the link includes a Uniform Resource Locator.

9. A system for providing placement of a plurality of graphical objects on a page accessible by a user, the graphical objects including graphic and text symbols, the page having positions for receipt of the objects, each object having at least one link to information, the link being invoked by an event identifying the object by a computer pointing device, the system comprising:

a device for storing data associated with the past performance of an object;

a server for prioritizing objects relative to one another on a page according to the data.

10. The system according to claim **9**, wherein the server performs a calculation which predicts the likelihood of an event occurring for the object, and the server prioritizes the objects on the page according to this calculation.

11. The system according to claim **10**, wherein a weighting factor for each object is multiplied times the likelihood of an event occurring, and the server prioritizes the objects on the page according to this product.

12. The system according to claim **9**, which further includes a device for creating and arranging data groups for storing the data associated with the past performance of an object.

13. The system according to claim **12**, wherein the data groups are delineated by user characteristics.

14. The system according to claim **13**, which further includes a device for gathering and storing user information.

15. The system according to claim **14**, wherein the server collects a set of objects associated with the user information, and the server performs a calculation which predicts the likelihood of an event occurring for each object within the set from the data associated with the past performance of the object, and the server prioritizes the objects on the page according to this calculation.

16. The system according to claim **14**, wherein the server collects a set of objects associated with the user information, and the server performs a calculation which predicts the likelihood of an event occurring for each object within the set from the data associated with the past performance of the object, a weighting factor for each object is multiplied times the likelihood of an event occurring, and the server prioritizes the objects on the page according to this product.

17. A method of arranging a plurality of graphical objects on a page viewable by a user on a computer display, comprising:

storing a plurality of graphical objects;

calculating a value indicative of the rate that a specified event occurs for each graphical object displayed to the user; and

displaying at least some of the graphical objects to the user, where the displayed graphical objects are arranged relative to one another on the page using the calculated values.

18. The method according to claim **17**, wherein the displayed graphical objects are arranged in decreasing visual prominence on the page in decreasing order of calculated value.

19. The method according to claim **18**, wherein each displayed graphical object includes a link to information, and the specified event is a user invoking the link.

20. The method according to claim **19**, wherein the specified event is a click-through and the calculated value for a graphical object is indicative of the rate that users click through the link associated with the graphical object.

21. The method according to claim **19**, wherein each graphical object includes at least one of graphic and text symbols.

22. The method according to claim **21**, wherein each graphical object is one of an advertisement and a topic tile.

23. The method according to claim **19**, wherein a stored graphical object may have associated with it at least one constraint on the display of the graphical object.

24. The method according to claim **23**, wherein one constraint is a restriction on pages or positions where the graphical object may be displayed.

25. The method according to claim **23**, wherein one constraint is a restriction on a demographic variable of a user to whom the graphical object should be displayed.

26. The method according to claim **17**, wherein the displayed graphical objects are arranged on the page in descending order using the product of the calculated value and a weighting factor.

27. The method according to claim **26**, wherein the weighting factor is a monetary amount.

28. The method according to claim **27**, wherein the monetary amount is revenue per user.

29. The method according to claim **27**, wherein each displayed graphical object includes a link to information, the specified event is a user invoking the link, and the monetary amount is a price per click through when a user invokes a link to information associated with a graphical object.

30. The method according to claim **17**, wherein the calculated value is based, at least in part, on the prior performance of the graphical object.

31. The method according to claim **30**, wherein when a graphical object is new, the calculated rate initially is set to an overestimated value so that the calculated value converges from above.

* * * * *