(19) Europäisches Patentamt
European Patent Office
Office européen des brevets

(11) EP 2 145 759 A1

(12) **EUROPEAN PATENT APPLICATION**

(43) Date of publication:
20.01.2010 Bulletin 2010/03

(51) Int Cl.:
B32B 15/08 *(2006.01)* ***B32B 27/36*** *(2006.01)*
B65D 65/40 *(2006.01)* ***B65D 1/28*** *(2006.01)*

(21) Application number: **08405179.6**

(22) Date of filing: **15.07.2008**

(84) Designated Contracting States:
AT BE BG CH CY CZ DE DK EE ES FI FR GB GR HR HU IE IS IT LI LT LU LV MC MT NL NO PL PT RO SE SI SK TR
Designated Extension States:
AL BA MK RS

(71) Applicant: **Alcan Technology & Management Ltd.**
8212 Neuhausen am Rheinfall (CH)

(72) Inventors:
- **Geerts, Ronald Franciscus Richard**
  3813 AB Amersfoort (NL)
- **Verbeek, Dirk Cornells**
  7325 PC Apeldoorn (NL)
- **Engelhart, Hendrik**
  7205 EB Zutphen (NL)
- **Hutter, Leo**
  9444 Dlepoldsau (CH)

(54) **Laminate and container made of the laminate by deep-drawing**

(57) A laminate (30) for the production of a container (10) by deep-drawing consisting of an aluminium foil (32) having a thickness of 60 to 250 μm and a biaxially oriented polyester film (36) having a thickness of 10 to 75 μm, connected to the aluminium foil (32) by means of a laminate adhesive (34). The laminate is suitable for the production of containers for packaging ready meals which are sterilized in the closed container and can be reheated both in a microwave and in a conventional oven heated to a temperature of up to 220°C.

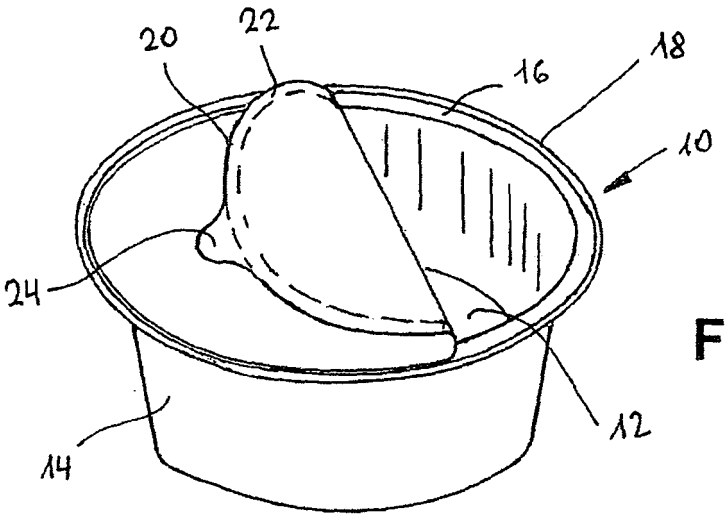

Fig. 1

EP 2 145 759 A1

IPR2024-00254
Nespresso USA, Inc. Ex. 1028
Page 1 of 8

Description

[0001] The invention relates to a laminate for the production of a container by deep-drawing, a method of producing a container and a container having a bottom, a sidewall extending from the bottom, a ring-shaped sealing area and a lid sealed onto the sealing area.

[0002] From EP 0 140 282 A2, a method for producing a container is known in which a metal foil of a thickness of not more than 40 μm and covered on one or both sides with hotmelt is produced by shaping from the flat foil, with fold-forming in the sidewall. The fold-forming is effected by a corresponding grooving of the forming tool. The folds are intended to avoid the forming of cracks or bores even in the case of use of thin metal foils of less than 40 μm and thus ensure the desired tightness requirements for long-term preserving. However, precisely at the folding point, the forming of pores or cracks cannot be ruled out with certainty. Apart from this, the appearance of a container provided with folds in the sidewall is unsatisfactory. Finally, a high material expenditure is required for forming the folds.

[0003] For packaging ready meals prepared to be reheated later in the microwave or in the oven, sterilized containers made of semi-rigid material are known. The containers often consist of a e.g. golden lacquered aluminium foil, formed by deep-drawing. The lid sealed rigidly or peelably onto the container rim is usually made of the same material as the container.

[0004] From EP 1 762 503 A1 a sterilizable semi-rigid container is known, having a container wall extending from the bottom, a ring-shaped sealing area confining a container opening and a lid peelably sealed onto the sealing area. Container and lid consist of an aluminium foil having a lacquer layer on one of the surfaces providing the exterior of the container and a sealing layer on the other surface providing the interior of the container. The container is shaped from the flat foil by deep-drawing.

[0005] From EP 1 787 799 A1, a deep-drawable composite containing an aluminium foil is known as a suitable composite material for producing deep-drawn containers and lid foil for sealing onto the containers. To increase the buckling resistance and decrease the thermal conductivity, the aluminium foil is on one side coated with a closed-cell plastic foam. The foam layers extruded from polyethylene terephthalate as C-PET or A-PET exhibit excellent thermoforming properties and offer a high temperature resistance and a high mechanical resistance. The plastic foam layer is forming the exterior of the container and the exterior of a lid sealed onto the container. On the other side forming the interior of the container and the interior of a lid sealed onto the container, the aluminium foil is coated with a hot sealing layer of e.g. polyethylene (PE) or polypropylene (PP) or a hot sealing lacquer. The containers having a peelably sealed lid are suitable as one or multiple serving packs for packaging of fill goods intended to be reheated in a microwave.

[0006] It is the object of the invention to provide a deep-drawable laminate containing a metal foil for the production of a container. The container shall be suitable for the use both in a microwave and in an oven heated to a temperature of up to 220°C. After filling the container and sealing a preferably transparent lid onto the container, the container shall be able to be pasteurized or sterilized. In addition, the offered solution shall be free of PVC (polyvinylchloride) containing materials.

[0007] The foregoing object is achieved according to the invention by a laminate of an aluminium foil having a thickness of 60 to 250 μm and a biaxially oriented polyester film having a thickness of 10 to 75 μm connected to the aluminium foil by using a laminate adhesive.

[0008] The core of the invention lies in the combination of the polyester film that is heat-resistant when heated in a microwave and in a conventional oven to a temperature of up to 220°C, and the deep-drawable aluminium foil.

[0009] The laminate is formed into the container by deep-drawing, the aluminium foil representing the exterior and the polyester film the interior of the container.

[0010] The aluminium foil has a preferable thickness of 90 to 160 μm, particularly 100 to 130 μm.

[0011] The polyester film has a preferable thickness of 20 to 35 μm, particularly 20 to 25 μm. A preferred polyester film is a film of polyethylene terephthalate (PET).

[0012] A preferred laminate adhesive is an adhesive which is resistant to a temperature of up to 220°C, e.g. an adhesive on a polyurethane (PU) or epoxide base.

[0013] The container produced of the laminate according to the invention by deep-drawing comprises a bottom, a sidewall extending from the bottom, a ring-shaped sealing area as a container rim and a lid sealed onto the sealing area.

[0014] The present invention comprises all shapes of containers that can be produced with the usual deep-drawing methods. Possible shapes are e.g. round, square, triangular, rectangular, pentagonal, hexagonal and octagonal.

[0015] The main application of the container produced from the laminate according to the present invention by deep-drawing lies in the packaging of ready meals that are sterilized in the closed container and can be reheated both in a microwave or in a conventional oven to a temperature of up to 220°C.

[0016] Further advantages, features and details of the invention are revealed in the following description of preferred exemplified embodiments and with the aid of the drawing which shows schematically in

Fig. 1 a perspective view of a container with partly open lid;

Fig. 2 a view from above on the container shown in fig. 1;

Fig. 3 a cross-section of the container shown in fig. 1

IPR2024-00254
Nespresso USA, Inc. Ex. 1028
Page 2 of 8

along line I-I of fig. 2;

Fig. 4 a cross-section of the laminate used in the production of the container shown in fig. 1 along line II-II of fig. 3.

[0017] A container 10 shown in figs. 1 to 3 for receiving e.g. ready meals has a bottom 12 and a sidewall 14 extending from the bottom 12 and defining a filling volume. From bottom 12 the sidewall 14 extends upwards with an outwardly inclined angle of e.g. 1 to 12° and goes at its bottom far end into a ring-shaped sealing area 16 horizontally extending outwardly and having a width of e.g. 2,0 to 5,0 mm. The part of the sidewall 14 residing after the sealing area 16 is curled outwardly or inwardly as a container rim so that the upper edge of the curled rim 18, having a diameter of e.g. 1,0 to 4 mm, particularly 1,5 to 2,5 mm, lies above the plane defined by the sealing area 16.

[0018] The outer diameter of the container 10 amounts to e.g. 60 to 150 mm, the height 27,5 to 72,5 mm.

[0019] A lid 20 closing the container 10 is sealed via an outer sealing rim 22 onto the sealing area 16 of the container 10.

[0020] In the example shown in figs. 1 to 3 the lid 20 is peelable and can be torn off from the sealing area 16 of the container 10 by means of a tear tab 24 arranged outside of the sealing rim 22. The container is made from the laminate by deep-drawing.

[0021] A composition of a laminate 30 as shown in fig. 4 for the production of containers 10 consists of a e.g. 100 μm thick aluminium foil 32 connected to a e.g. 23 μm thick biaxially oriented PET film by means of a laminate adhesive 34 on the basis of e.g. polyurethane or epoxide.

[0022] The lid 20 is e.g. a multilayer transparent film having a sealable layer of a hot sealing lacquer or a sealable plastic layer pointing to the container 10 and sealable to the PET film 36 of the container laminate and a plastic film of e.g. oriented polyamide (oPA) representing the exterior.

[0023] The aluminium foil 32 of the laminate 30 and the container 10 produced by deep-drawing, respectively, may be provided with a lacquer layer 38 on the outside. The lacquer layer 38 of the container material is usually colored. Preferred colors are gold, silver, white, blue, green, crimson, red and black. The aluminium foil and /or the lacquer layer can also be printed. The printing can be applied partial or on the whole area. The printing can include any design. The gravure or UV/flexo color systems used comply in their properties to the requirements made on the deep-drawing and the sterilization process.

[0024] In connection with the present invention, pasteurizability and sterilizability means a treatment under usual pasteurizing or sterilizing conditions, i.e. 30 - 90 minutes at a temperature of 65 - 130°C at a pressure of 0 - 2,6 bar and a counter-pressure of 0 - 2,8 bar.

Claims

1. Laminate for the production of a container (10) by deep-drawing,
characterized in that
the laminate (30) consists of an aluminium foil (32) having a thickness of 60 to 250 μm and a biaxially oriented polyester film (36) having a thickness of 10 to 75 μm, connected to the aluminium foil (32) by means of a laminate adhesive (34).

2. Laminate according to claim 1, **characterized in that** the aluminium foil (32) has a thickness of 90 to 160 μm, particularly 100 to 130 μm.

3. Laminate according to claim 1, **characterized in that** the biaxially oriented polyester film (36) has a thickness of 20 to 25 μm, particularly 20 to 25 μm.

4. Laminate according to one of claims 1 to 3, **characterized in that** the polyester film (36) is a film of polyethylene terephthalate (PET).

5. Laminate according to one of claims 1 to 4, **characterized in that** the laminate adhesive (34) is an adhesive on a polyurethane or epoxide base.

6. Method of producing a container (10), **characterized in that** a laminate (30) according to one of the preceding claims is formed to the container (10) by deep-drawing, the aluminium foil (32) representing the exterior and the polyester film (36) representing the interior of the container (10).

7. Container (10), having a bottom (12), a sidewall (14) extending from the bottom (12), a ring-shaped sealing area (16) and a lid (20) sealed onto the sealing area (16),
characterized in that
the container (10) is made of a laminate (30) consisting of an aluminium foil (32) having a thickness of 60 to 250 μm and a biaxially oriented polyester film (36) made by deep-drawing having a thickness of 10 to 75 μm representing the interior of the container (10), and being connected to the aluminium foil (32) by means of a laminate adhesive (34).

8. Container according to claim 7, **characterized in that** the aluminium foil (32) has a thickness of 90 to 160 μm, particularly 100 to 130 μm.

9. Container according to claim 7, **characterized in that** the biaxially oriented polyester film (36) has a thickness of 20 to 35 μm, particularly 20 to 25 μm.

10. Container according to one of the claims 7 to 9, **characterized in that** the polyester film (36) is a film of polyethylene terephthalate (PET).

IPR2024-00254
Nespresso USA, Inc. Ex. 1028
Page 3 of 8

11. Container according to one of the claims 7 to 10, **characterized in that** the laminate adhesive (34) is an adhesive on a polyurethane or epoxide base.

IPR2024-00254
Nespresso USA, Inc. Ex. 1028
Page 4 of 8

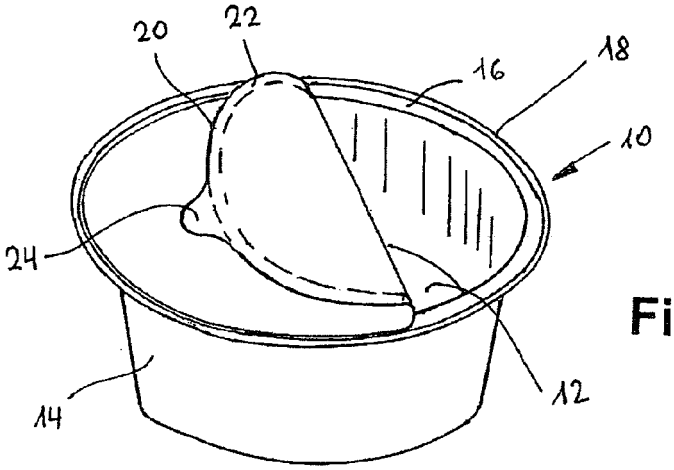

Fig. 1

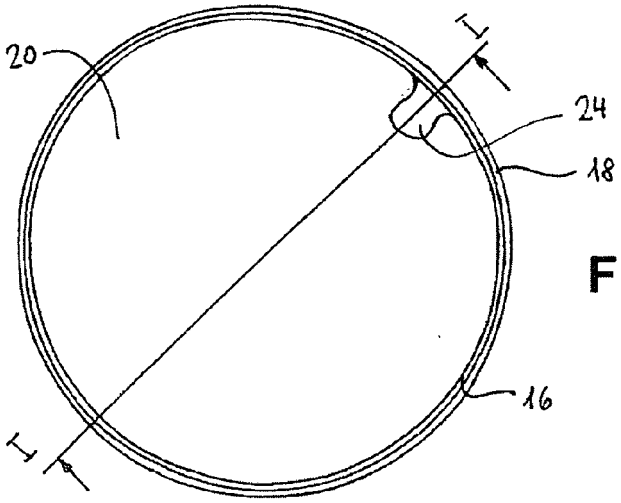

Fig. 2

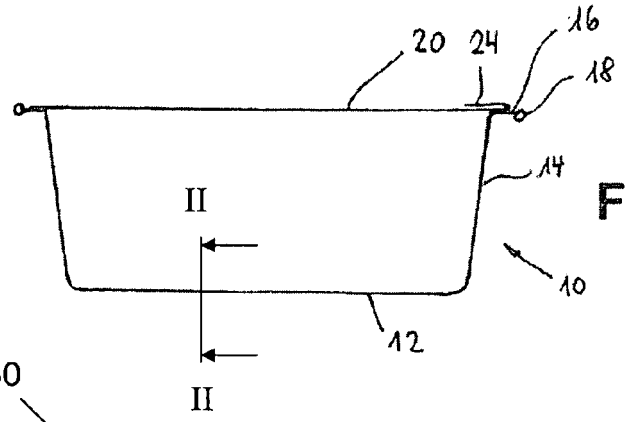

Fig. 3

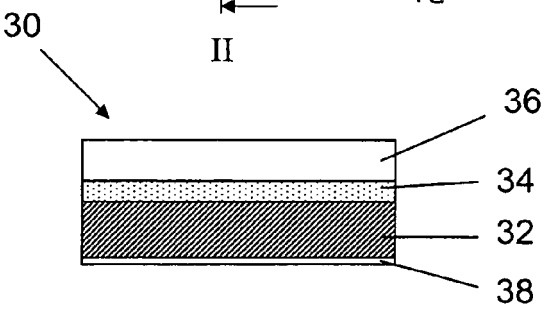

Fig. 4

IPR2024-00254
Nespresso USA, Inc. Ex. 1028
Page 5 of 8

Europäisches Patentamt
European Patent Office
Office européen des brevets

EUROPEAN SEARCH REPORT

Application Number
EP 08 40 5179

DOCUMENTS CONSIDERED TO BE RELEVANT

Category	Citation of document with indication, where appropriate, of relevant passages	Relevant to claim	CLASSIFICATION OF THE APPLICATION (IPC)
X	US 2006/040076 A1 (FRANZYSHEN STEPHEN K [US] ET AL) 23 February 2006 (2006-02-23) * paragraphs [0027], [0034], [0041]; claims 1,13,20,25; figures 1,3 * -----	1-11	INV. B32B15/08 B32B27/36 B65D65/40 B65D1/28
X	EP 0 544 545 A (TOYO SEIKAN KAISHA LTD [JP]) 2 June 1993 (1993-06-02) * page 6, line 50 - page 7, line 1; claims 1,7,8; example 1 * -----	1-11	
X	EP 1 288 261 A (UNITIKA LTD [JP]) 5 March 2003 (2003-03-05) * paragraphs [0069], [0070]; claims 1,9; examples 7-9 * -----	1,3-6, 9-11	
X	DE 40 29 553 A1 (TOYO SEIKAN KAISHA LTD [JP]) 28 March 1991 (1991-03-28) * page 6, lines 13,20-65; claims 1,5; examples 5,7 * -----	1,5,11	
Y	EP 0 586 161 A (TEIJIN LTD [JP]) 9 March 1994 (1994-03-09) * page 5, lines 40-55; claims 1,14 * -----	1,6	TECHNICAL FIELDS SEARCHED (IPC) B32B B65D
D,Y	EP 1 787 799 A (ALCAN TECH & MAN LTD [CH]) 23 May 2007 (2007-05-23) * paragraphs [0030] - [0032]; claims 1-4; figures 5,6,8 * -----	1,6	

The present search report has been drawn up for all claims

1

Place of search	Date of completion of the search	Examiner
The Hague	30 September 2008	Derz, Thomas

CATEGORY OF CITED DOCUMENTS

X : particularly relevant if taken alone
Y : particularly relevant if combined with another document of the same category
A : technological background
O : non-written disclosure
P : intermediate document

T : theory or principle underlying the invention
E : earlier patent document, but published on, or after the filing date
D : document cited in the application
L : document cited for other reasons
.....
& : member of the same patent family, corresponding document

EPO FORM 1503 03.82 (P04C01)

IPR2024-00254
Nespresso USA, Inc. Ex. 1028
Page 6 of 8

ANNEX TO THE EUROPEAN SEARCH REPORT ON EUROPEAN PATENT APPLICATION NO. EP 08 40 5179

This annex lists the patent family members relating to the patent documents cited in the above-mentioned European search report.
The members are as contained in the European Patent Office EDP file on
The European Patent Office is in no way liable for these particulars which are merely given for the purpose of information.

30-09-2008

Patent document cited in search report		Publication date	Patent family member(s)			Publication date
US 2006040076	A1	23-02-2006	CN	101005947	A	25-07-2007
			EP	1778475	A1	02-05-2007
			JP	2008509832	T	03-04-2008
			KR	20070046893	A	03-05-2007
			WO	2006023182	A1	02-03-2006
EP 0544545	A	02-06-1993	JP	2500556	B2	29-05-1996
			JP	5147647	A	15-06-1993
			US	5300335	A	05-04-1994
EP 1288261	A	05-03-2003	CN	1395599	A	05-02-2003
			HK	1052523	A1	23-09-2005
			WO	0192417	A1	06-12-2001
			US	2003069387	A1	10-04-2003
DE 4029553	A1	28-03-1991	GB	2238981	A	19-06-1991
			JP	2047344	C	25-04-1996
			JP	3101930	A	26-04-1991
			JP	7055552	B	14-06-1995
			US	5137762	A	11-08-1992
EP 0586161	A	09-03-1994	JP	2960613	B2	12-10-1999
			JP	6065404	A	08-03-1994
EP 1787799	A	23-05-2007	NONE			

EPO FORM P0459

For more details about this annex : see Official Journal of the European Patent Office, No. 12/82

REFERENCES CITED IN THE DESCRIPTION

This list of references cited by the applicant is for the reader's convenience only. It does not form part of the European patent document. Even though great care has been taken in compiling the references, errors or omissions cannot be excluded and the EPO disclaims all liability in this regard.

Patent documents cited in the description

- EP 0140282 A2 **[0002]**
- EP 1762503 A1 **[0004]**
- EP 1787799 A1 **[0005]**

IPR2024-00254
Nespresso USA, Inc. Ex. 1028
Page 8 of 8