US005243164A

United States Patent [19]

Erickson et al.

[11] Patent Number: 5,243,164

[45] Date of Patent: Sep. 7, 1993

[54] BEVERAGE MAKER

[75] Inventors: Laurence R. Erickson; Michael A. Babinec; Judy J. Gunderson, all of Midland, Mich.; M. Gary Grossman, Riverside, Conn.; Edward H. Meisner, Short Hills, N.J.

[73] Assignees: GEE Associates, Edgewater, N.J.; Dowbrands, Inc., Indianapolis, Ind.

[21] Appl. No.: 627,655

[22] Filed: Dec. 14, 1990

[51] Int. Cl.[5] H05B 6/80

[52] U.S. Cl. ..... 219/10.55 E; 219/10.55 R; 99/DIG. 14; 99/300; 99/306; 426/241; 426/243; 426/433; 426/234; 426/77

[58] Field of Search ..... 219/10.55 E, 10.55 A, 219/10.55 R; 99/DIG. 14, 306, 283, 295, 323, 316, 300; 426/115, 77, 241, 243, 234, 433, 107, 113, 79

[56] References Cited

U.S. PATENT DOCUMENTS

2,000,309	5/1935	Wentorf	99/306
2,292,101	8/1942	Brown	426/77
2,292,853	8/1942	Wilcox	99/283
2,560,523	7/1951	Efford	222/146.2
2,601,067	6/1952	Spencer	99/292
2,615,384	10/1952	Ranz	99/295
2,743,664	5/1956	Dale	99/295
3,063,359	11/1962	Brant	99/306
3,083,101	3/1963	Nowry	426/113
3,094,917	6/1963	Rombouts	99/323
3,097,787	7/1963	Schur	426/77
3,293,048	12/1966	Kitterman	426/113
3,333,527	8/1967	Bender	99/306
3,336,142	8/1967	Lawson	219/10.55 A
3,391,632	7/1968	Colonna	99/295
3,410,697	11/1968	Stephenson	426/114
3,442,199	5/1969	McGrail	99/306
3,465,873	9/1969	Munz	446/114
3,587,444	6/1971	Godel	99/305
3,589,272	6/1971	Bouladoa	99/295
3,672,916	6/1972	Virnig	426/114
3,694,235	9/1972	Siegel	99/295
3,695,168	10/1972	Van Brunt	99/306
3,743,520	7/1973	Croner	426/115
3,796,813	3/1974	Kurland	426/132
3,868,218	2/1975	Tornmarck et al.	426/88
3,937,134	2/1976	Molenaar et al.	426/77
3,985,069	10/1976	Cavalluzzi	99/295
4,006,820	2/1977	Smith	206/219
4,023,164	5/1977	Delaney	169/23
4,104,957	8/1978	Freedman et al.	99/283
4,132,239	1/1979	Bowen et al.	99/305
4,136,202	1/1979	Favre	99/295
4,166,208	8/1979	Martel et al.	99/DIG. 14
4,167,136	9/1979	Chupurdy	99/306
4,167,899	9/1979	McCormick	99/316
4,190,077	2/1980	Bowen et al.	99/305
4,207,725	6/1980	Smith	206/219

(List continued on next page.)

FOREIGN PATENT DOCUMENTS

177281A	4/1986	European Pat. Off. .
0320679	6/1989	European Pat. Off. .

OTHER PUBLICATIONS

G. B. Raffetto Ads "Coffee in a Filter" and Cafe Filtre.

Primary Examiner—Bruce A. Reynolds
Assistant Examiner—Tu Hoang
Attorney, Agent, or Firm—George P. Hoare, Jr.; Shea & Gould

[57] ABSTRACT

A beverage maker having a reservoir for holding liquid and a filter element for holding a substance, such as coffee grounds, for making the beverage. A partition separates the reservoir and filter element and has a heat responsive film. When the liquid in the reservoir is at or reaches a desired brewing temperature, the film opens to allow the flow of the heated liquid from the reservoir into and through the filter element and substance, such as coffee grounds, to produce a freshly brewed beverage, ready for dispensing.

21 Claims, 11 Drawing Sheets

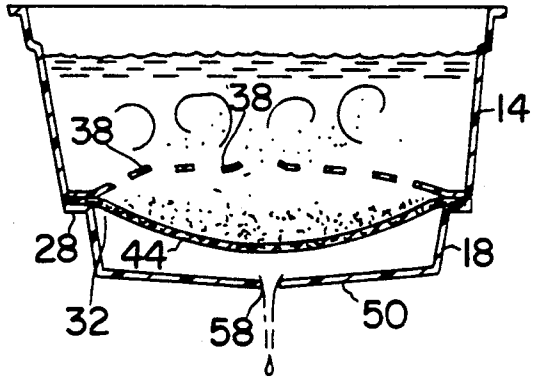

U.S. PATENT DOCUMENTS

4,210,674	7/1980	Mitchell	219/10.55 E
4,226,330	10/1980	Butler	206/219
4,233,325	11/1980	Slangan et al.	219/10.55 E
4,303,196	12/1981	Raines et al.	99/283
4,306,492	12/1981	Zimmermann	99/287
4,345,512	8/1982	Moore	219/10.55 E
4,348,421	9/1982	Sakakibara et al.	426/115
4,381,696	5/1983	Koral	99/306
4,386,109	5/1983	Bowen et al.	99/307
4,404,241	9/1983	Mueller et al.	219/10.55 R
4,417,504	11/1983	Yamamoto	426/115
4,446,158	5/1984	English et al.	99/306
4,471,689	9/1984	Piana	99/295
4,478,858	10/1984	Baird et al.	206/205
4,518,082	5/1985	Ye	426/115
4,550,024	10/1985	le Granse	99/306
4,577,080	3/1986	Grossman	219/10.55 E
4,596,713	6/1986	Burdette	426/113
4,627,334	12/1986	Shanklin	99/306
4,642,443	2/1987	Jorgensen et al.	219/10.55 E
4,697,502	10/1987	English et al.	99/299
4,697,503	10/1987	Okabe et al.	99/306
4,720,410	1/1988	Lundquist et al.	426/113
4,721,835	1/1988	Welker	219/10.55 E
4,756,915	7/1988	Dobry	426/234
4,806,371	2/1989	Mendenhall	426/113
4,883,936	11/1989	Maynard et al.	219/10.55 F
4,985,300	1/1977	Huang	426/392
5,010,221	7/1980	Grossman et al.	219/10.55 E
5,064,980	11/1991	Grossman et al.	219/10.55 E

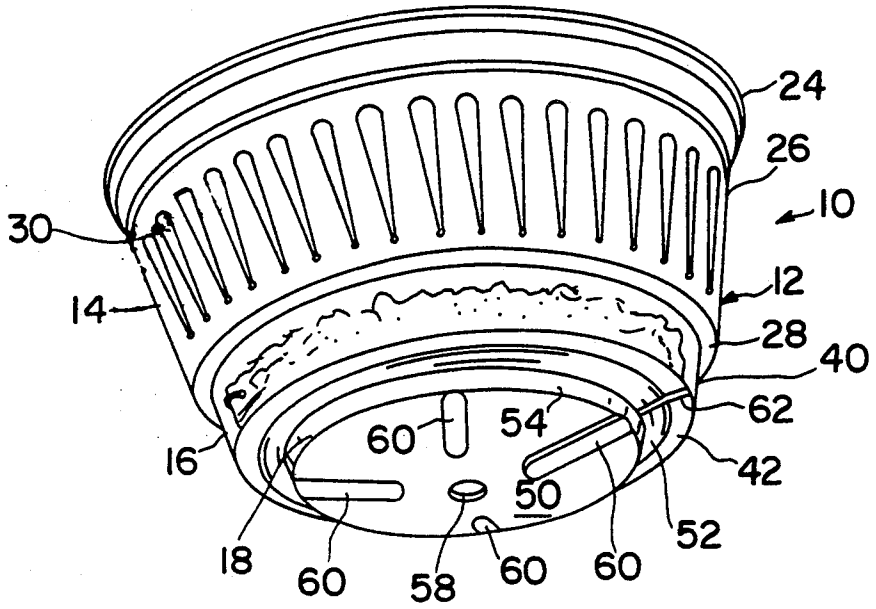
24
26
10
30
12
14
28
40
62
54
60
16
42
50
52
18
60
58
60
60

FIG. 1

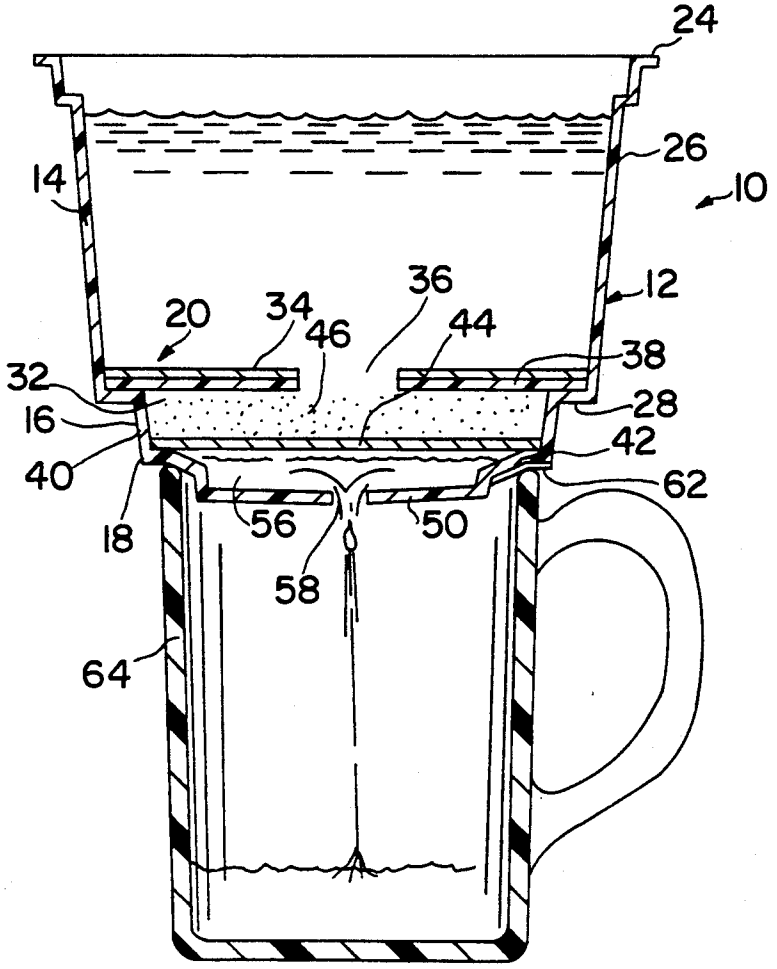
24
26
14
10
12
36
20
34
46
44
38
32
28
16
42
40
62
56
50
18
58
64

FIG. 2

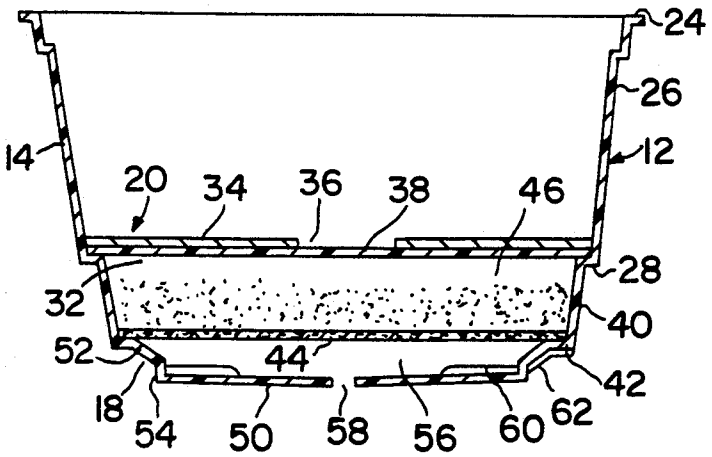

FIG.3

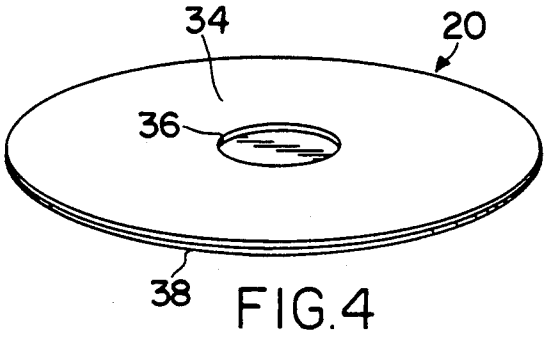

FIG.4

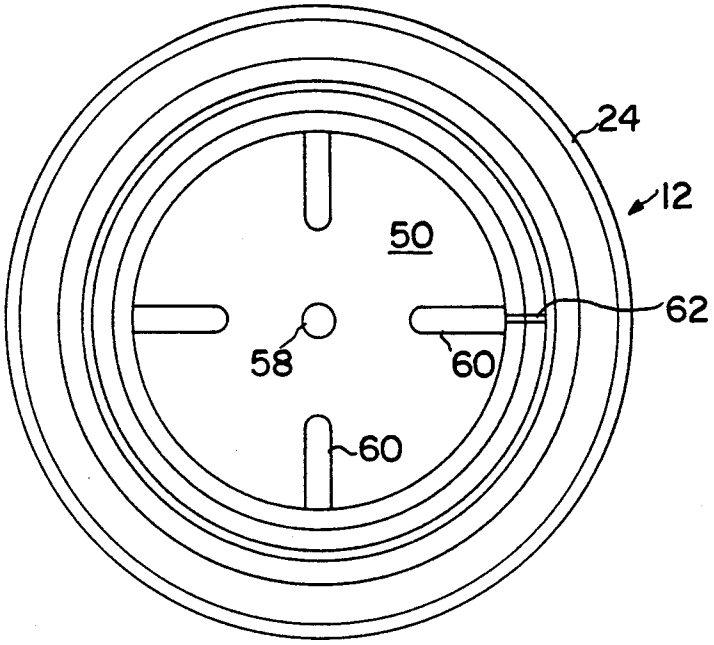

FIG.5

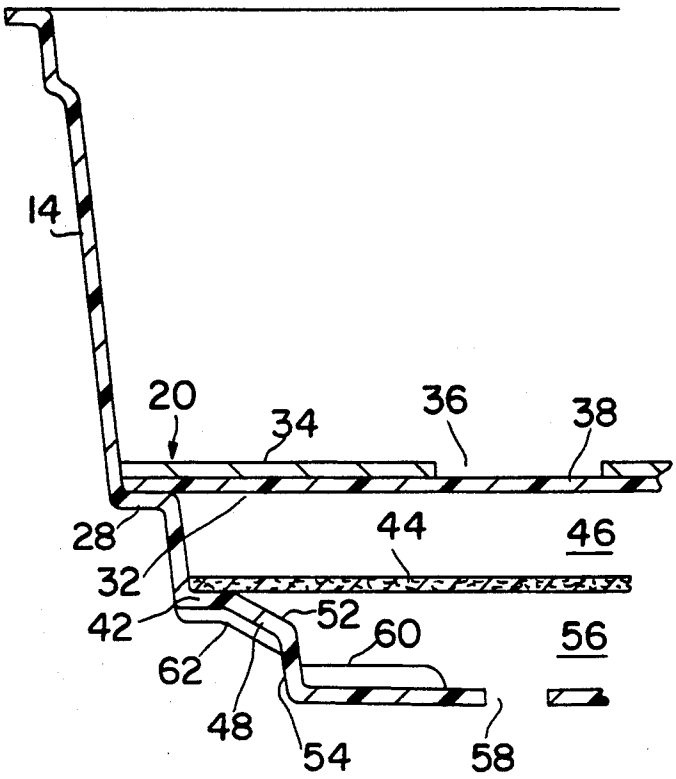

FIG.6

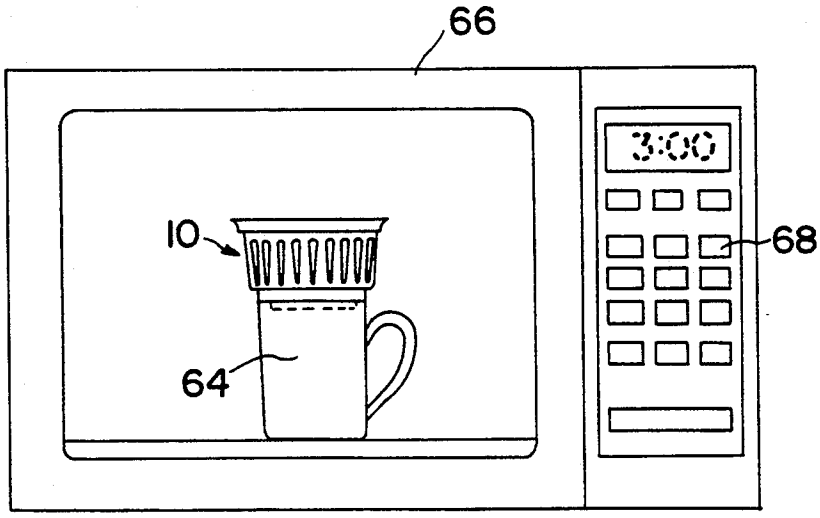

FIG.7

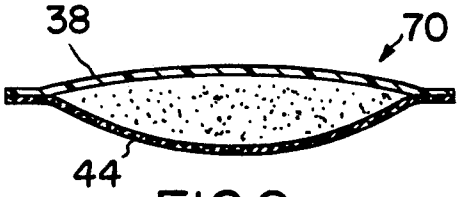

FIG.8

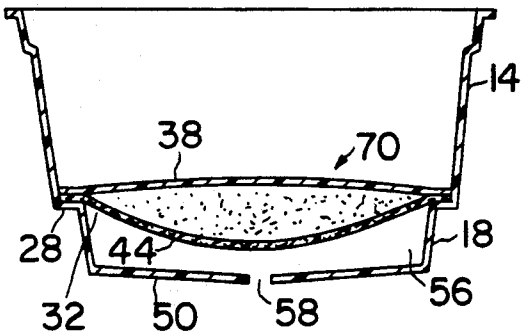

FIG.9

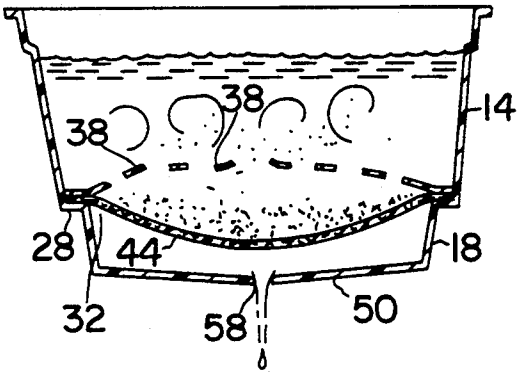

FIG.10

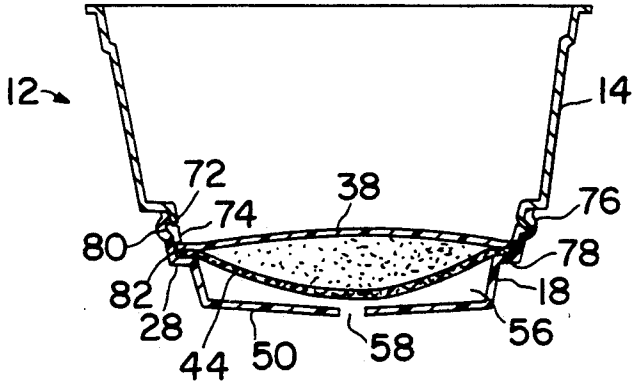

FIG.11

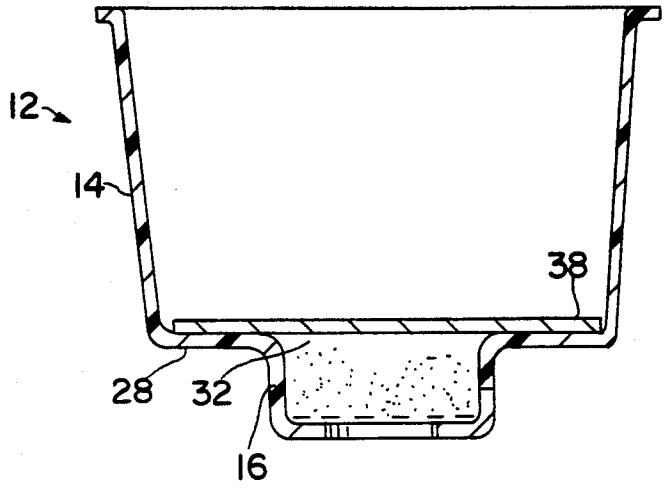

FIG. 12

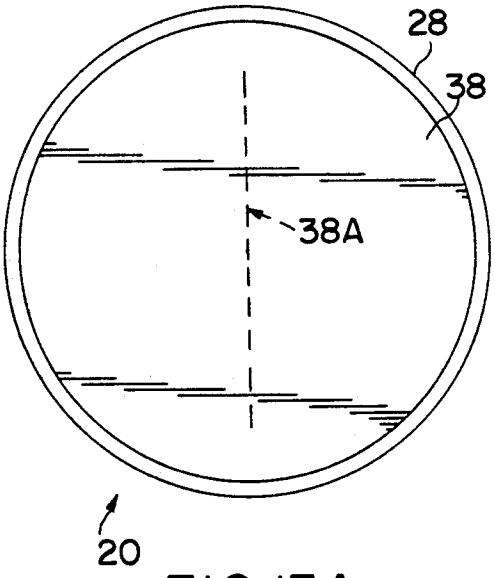

FIG. 13A

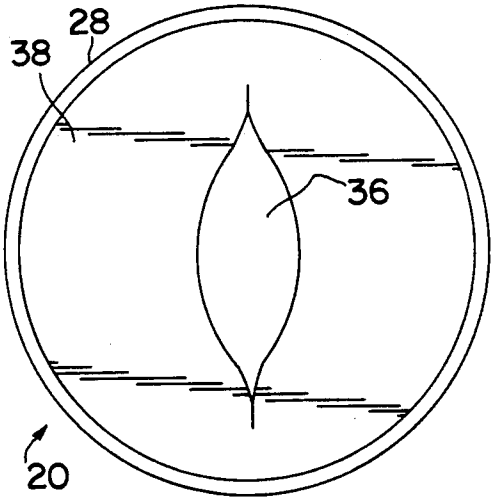

FIG. 13B

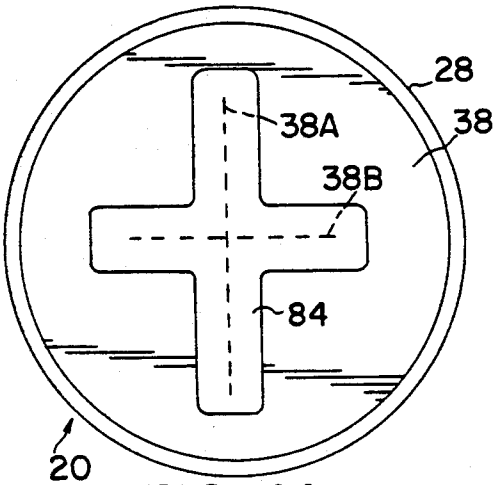

FIG.14A

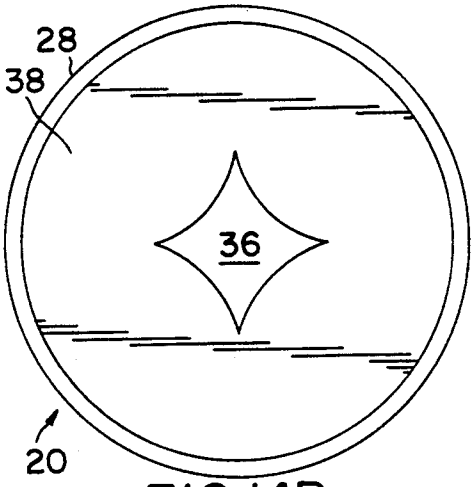

FIG.14B

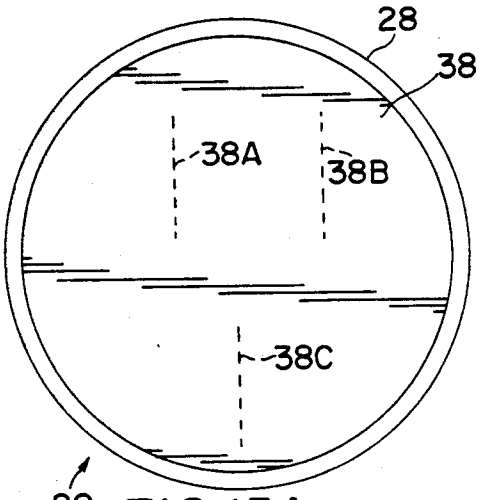

FIG.15A

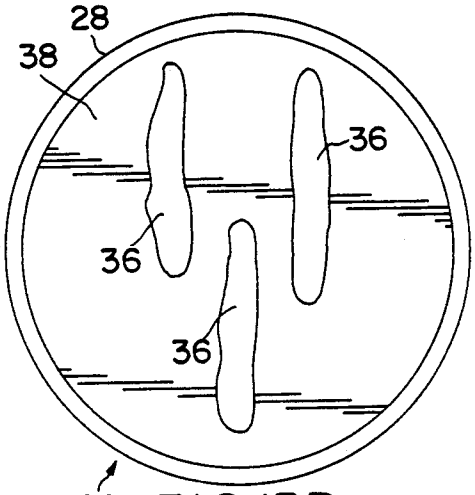

FIG.15B

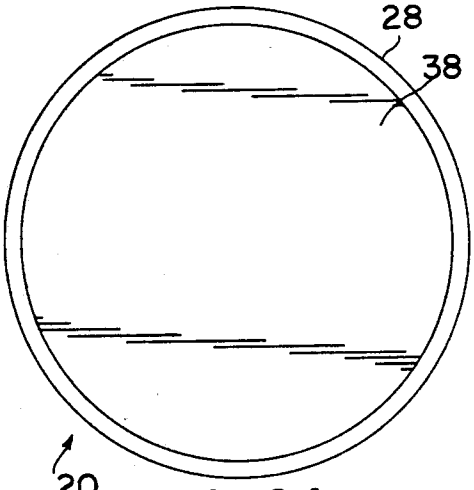

FIG.16A

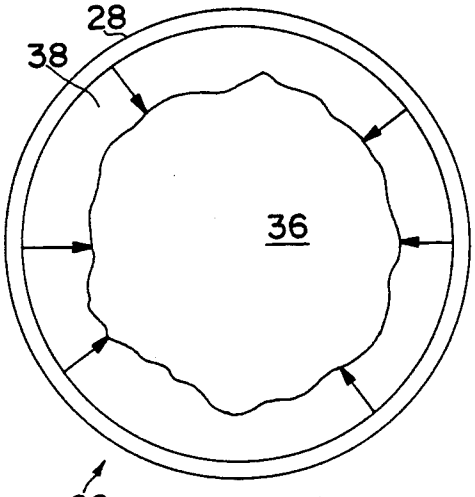

FIG.16B

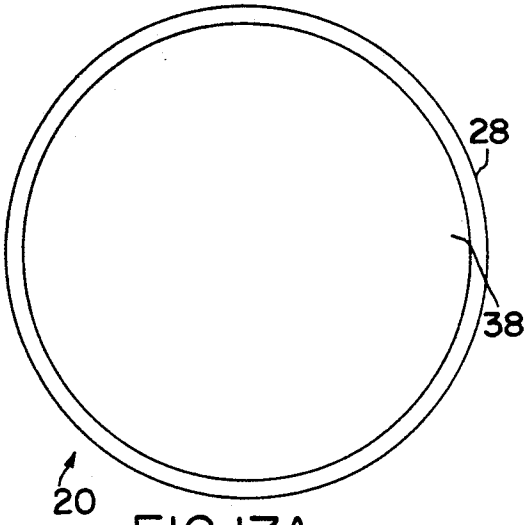

FIG.17A

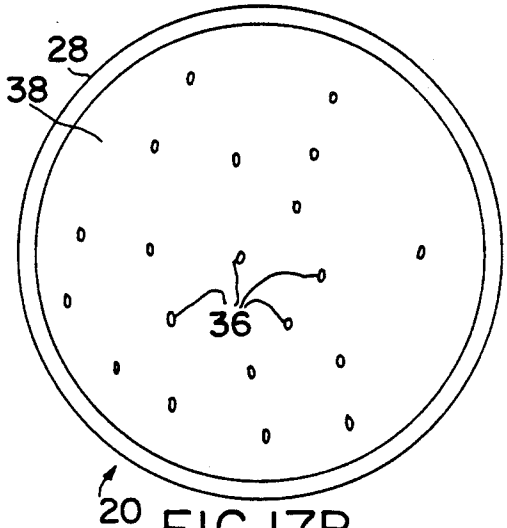

FIG.17B

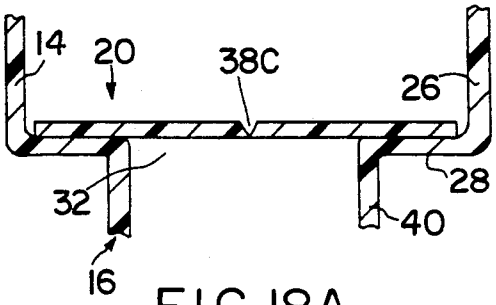

FIG.18A

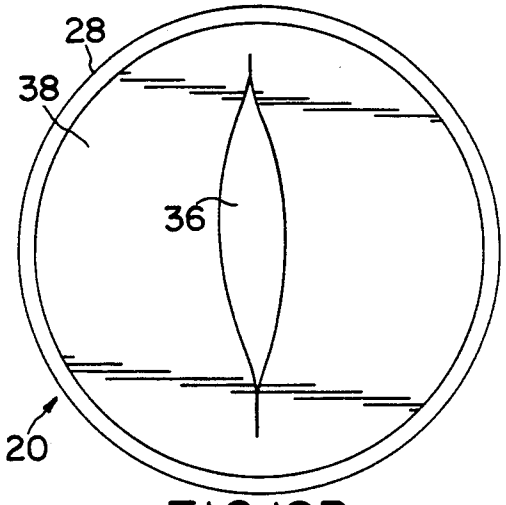

FIG.18B

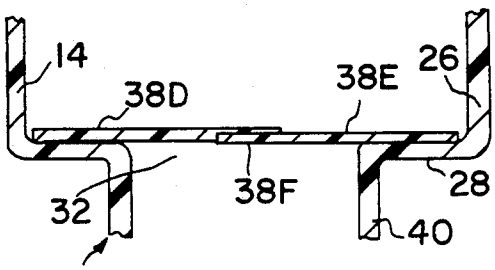

FIG.19A

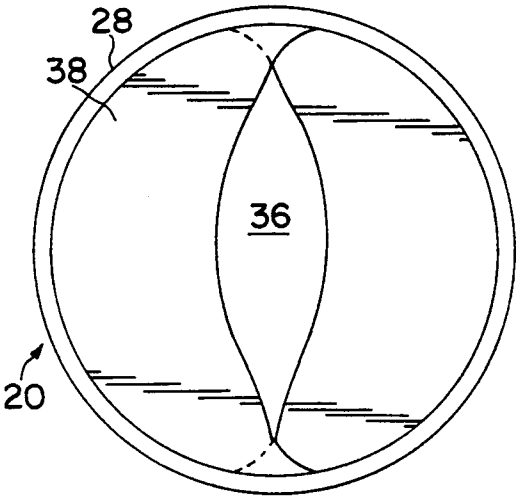

FIG.19B

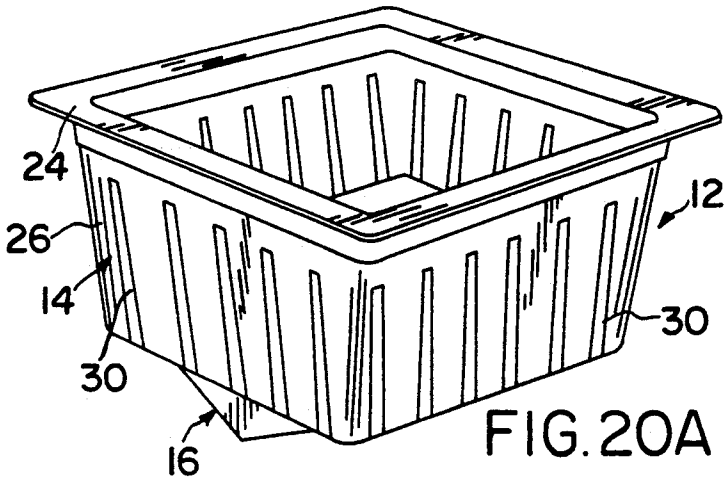

FIG. 20A

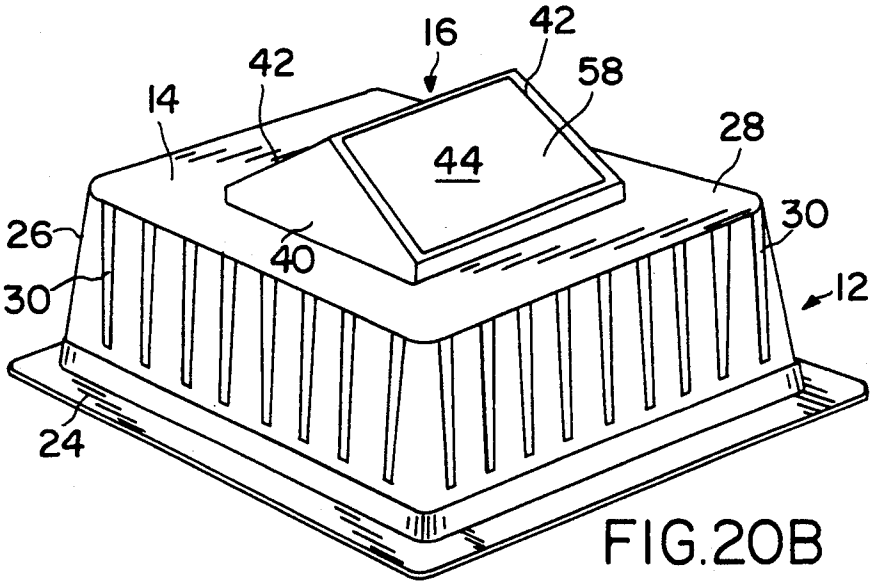

FIG. 20B

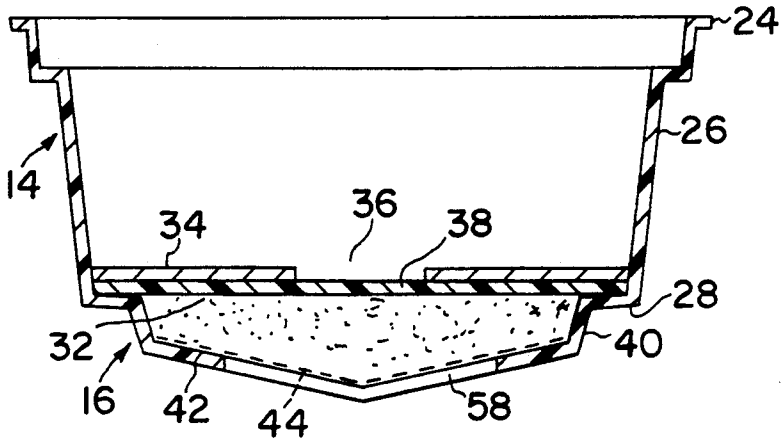

FIG. 20C

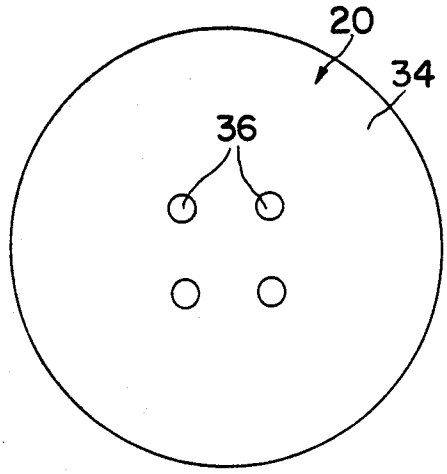

FIG.21

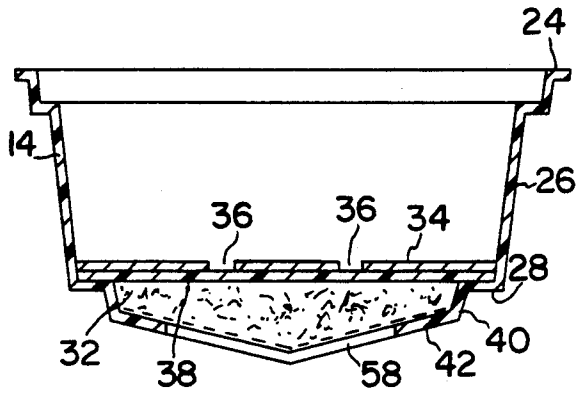

FIG.21A

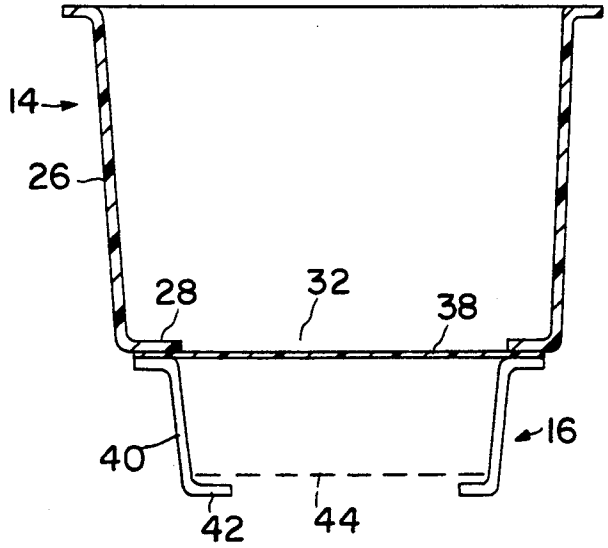

FIG.22

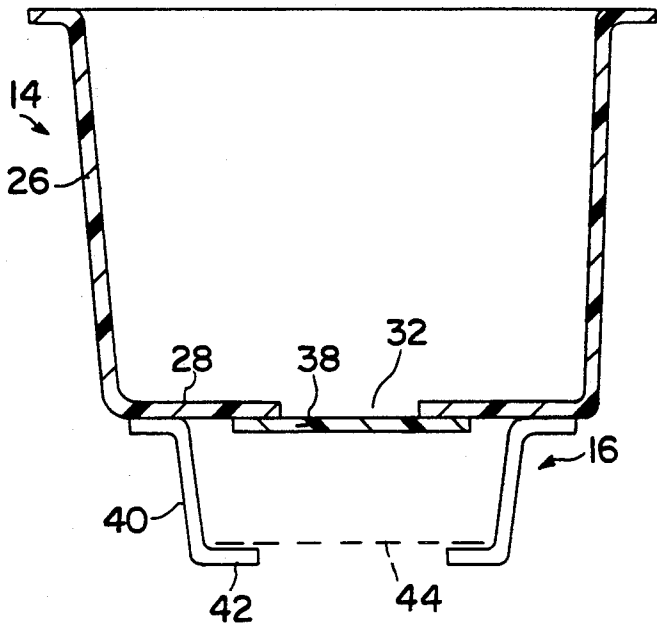

FIG.23

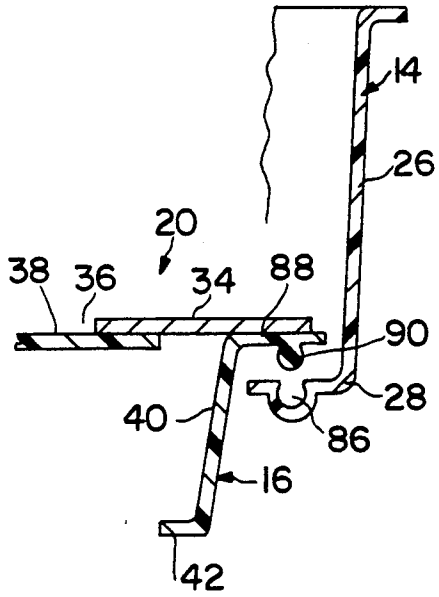

FIG.24

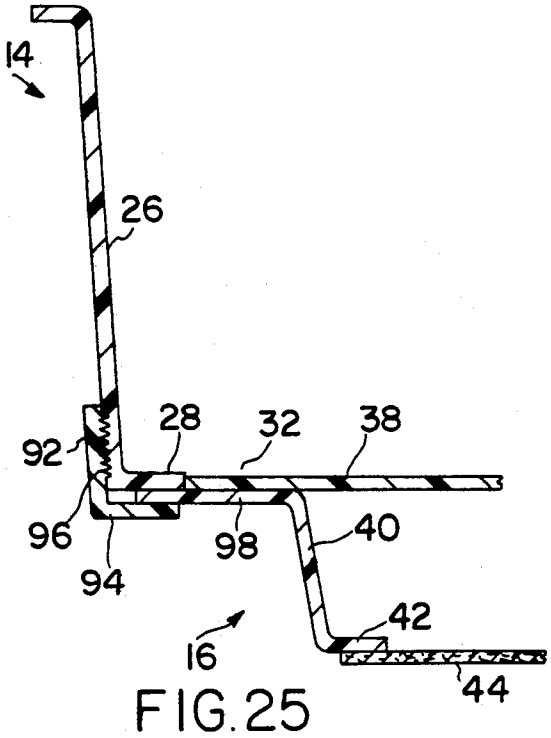

FIG.25

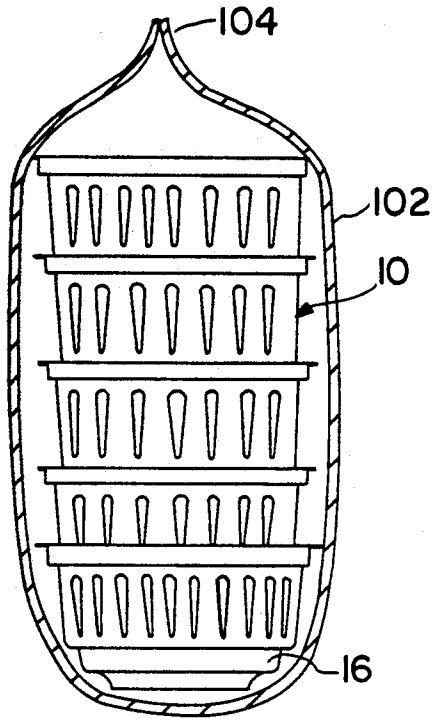

FIG.26

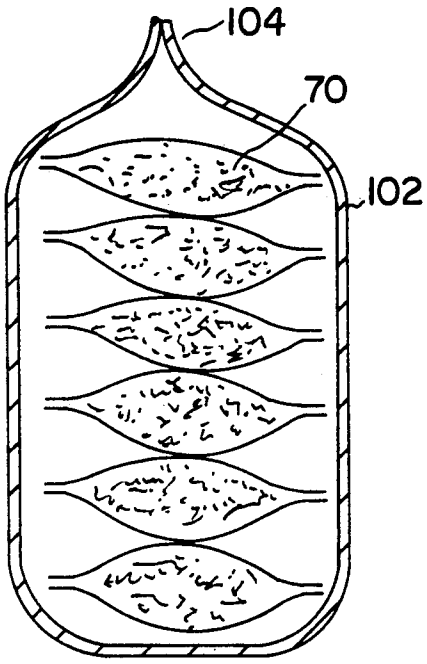

FIG.27

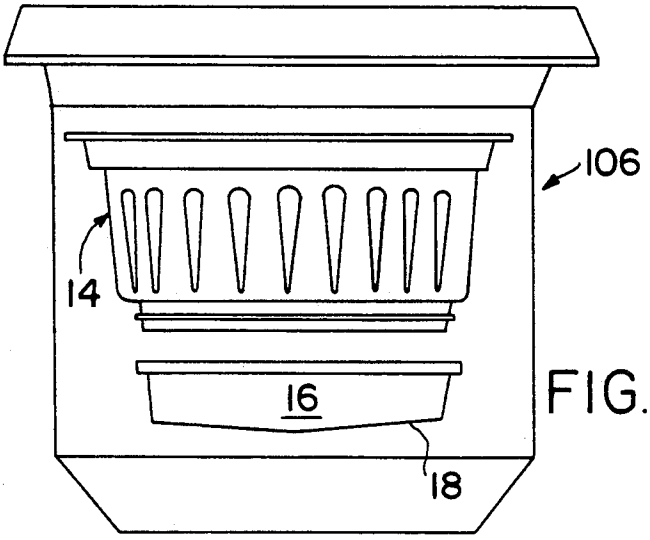

FIG.28

BEVERAGE MAKER

FIELD OF THE INVENTION

The invention is directed to a convenient, time saving beverage maker. This invention also relates to a relatively inexpensive, simple, disposable, drip-type, microwave coffee maker adapted to dispense freshly brewed coffee directly into a receptacle such as a cup, mug or the like.

BACKGROUND OF THE INVENTION

U.S. Pat. No. 4,577,080 discloses a beverage maker for coffee which is well suited for use in a microwave oven. The coffee maker includes a container having a reservoir for water, a filter element for coffee and a partition between the reservoir and filter element having at least one perforation or aperture therein adapted to be sealed or closed by the use of a non-toxic heat responsive substance until the water reaches brewing temperature. When the desired brewing temperature is reached, the heat responsive substance causes the aperture to open to allow the heated water to flow therethrough into the filter element and contact the coffee grounds to become freshly brewed coffee ready for dispensing.

The present invention relates to hot liquid makers, and preferably coffee makers, in which the partition separating the reservoir and the filter element facilitates the brewing of coffee or other hot liquid beverages.

SUMMARY OF THE INVENTION

The beverage makers of the present invention are well suited for brewing and dispensing coffee and other hot liquid beverages. It is to be understood that the apparatus of the present invention can be used to brew soup, broth, tea, flavored drinks including hot cocoa, hot chocolate and the like in addition to coffee. For convenience, however, the present invention will be hereinafter particularly described in connection with the brewing of coffee.

The apparatus of the invention includes a container having a reservoir for water, a filter element for coffee grounds, and a partition which separates the reservoir and filter element until the water reaches a desired brewing temperature. The partition includes a film sensitive to heat which is adapted to open communication between the reservoir and the filter element when the water is heated to a desired brewing temperature. As the film opens communication between the reservoir and filter element, the heated water, in the instance of a coffee maker, flows from the reservoir into the filter element to contact the coffee grounds and brew coffee for dispensing into a suitable receptacle. In the practice of the invention, the film of the partition, which acts as a valve, softens, stretches, weakens, breaks, shrinks, melts, dissolves or the like, to open and allow the heated water to mix and brew with the coffee grounds in the filter element.

The films of the invention can be selected from those which allow the passage of water at the desired temperature without moving with the water or otherwise affecting the chemical properties of the water. Preferred films are those which soften, stretch, weaken and break due to the hydrostatic pressure of the hot water in the water reservoir without chemically affecting the quality of the water. Various polymers may be employed as the water passing layer. The polymer films preferably lose strength and rupture when in contact with the heated water to allow water therethrough consistently under the temperature and pressure conditions within the device.

The films of the invention preferably are in the form of a relatively thin layer or layers (or ply or plies). The film can be of thicknesses ranging from monomolecular to typically about 0.005 inches (5 mils) and can be continuous or comprise filaments, threads or plies of the same or different materials. When the brewing temperatures are reached, the films of the invention respond by allowing the heated water to flow from the reservoir into the filter element without deteriorating the quality or taste of the water. The films of the invention also include heat shrinkable films, films which are plasticized by water, and multi-layer or ply films with different layers or plies selected for different functions, such as filter paper coated with a non-toxic heat responsive layer.

In a preferred embodiment of the invention, the partition includes a multi-layer film structure including an upper ply which is not affected by the heated water in the reservoir and which includes at least one aperture or opening therethrough, and a lower ply of a heat sensitive film which heat seals the partition to the container and which extends across the aperture in the upper ply. In use the heated water in the reservoir of the container causes the heat sensitive ply to soften, weaken, plasticize, melt, dissolve, break or the like to open the aperture, whereupon heated water in the reservoir flows through the aperture into the filter element and into contact with the coffee grounds for brewing and dispensing coffee from the coffee maker.

In another embodiment of the invention, the partition and filter form a packet for the coffee grounds, and wherein the packet can be placed in the container of the coffee maker. In this embodiment the container can be reused and refilled with the packets of the invention. In a preferred embodiment of the packet, the partition includes a heatsensitive film heat sealed to the filter. Upon reaching the desired brewing temperature, the heat responsive film plasticizes, thereby allowing the heated water to co-mingle with the coffee grounds in the packet for brewing coffee.

In the practice of the invention, the water can be preheated to a desired temperature of the coffee maker (e.g. from about 90° C. to 100° C.) and poured into the reservoir for brewing the coffee.

The coffee and beverage makers of the present invention also may be used in microwave ovens, by placing water in the reservoir and positioning the container on top of a cup, mug or other liquid receiving receptacle and placing the entire assembly in a microwave oven. When the water or other liquid reaches desired temperature (e.g. coffee brewing temperature) the film of the partition undergoes a change such as melting, dissolving, shrinking, plasticizing, mechanical failure, separating, developing porosity or the like, allowing the heated water to flow into and commingle with the coffee grounds in the filter element to become freshly made coffee or other beverage which can be dispensed directly into the receptacle, cup, mug or the like.

BRIEF DESCRIPTION OF THE DRAWINGS

The following drawings in which like reference characters indicate like parts are illustrative of embodiments of the invention for beverage makers and are not in-

tended to limit the scope of the invention encompassed by the claims forming part of the application.

FIG. 1 is a perspective view of a preferred embodiment of the invention which can be used as a coffee maker;

FIG. 2 is a front elevational view, in section, of the coffee maker of FIG. 1 on a mug and illustrating the operation of the invention;

FIG. 3 is a front elevational view, in section, of the coffee maker of FIG. 1;

FIG. 4 is a perspective of a partition of the coffee maker of FIG. 3 including a film valve of the invention;

FIG. 5 is a plan view of FIG. 3 with the partition removed;

FIG. 6 is an enlarged detail and a partial sectional view of the coffee maker of FIG. 3;

FIG. 7 is the coffee maker and mug of FIG. 2 in a microwave oven wherein the water in the reservoir can be heated to a brewing temperature;

FIG. 8 is a front elevational view, in section, of a film partition and filter in the form of a packet with coffee grounds there between for a coffee maker of the invention;

FIG. 9 is a front elevational view, in section, of a coffee maker of the invention including the packet of FIG. 8;

FIG. 10 illustrates the coffee maker of FIG. 9 in operation;

FIG. 11 is a front elevational view, in section, of another embodiment of the coffee maker of the invention including the packet of FIG. 8;

FIG. 12 is a front elevational view, in section, of a coffee maker of the invention, wherein the partition is in the form of a film which extends entirely across the reservoir;

FIG. 13A is a plan view of FIG. 12, showing the film with a discontinuous line of weakness;

FIG. 13B is a plan view similar to FIG. 13A illustrating the parting of the film when the water in the reservoir reaches a brewing temperature;

FIG. 14A is a plan view similar to FIG. 13A, illustrating a film having two discontinuous lines of weakness which cross one another;

FIG. 14B is a plan view of the film shown in FIG. 14A, after the water in the reservoir reaches a brewing temperature;

FIG. 15A is a plan view similar to FIG. 13A showing the film with multiple lines of weakness to separate and pull apart thus forming multiple apertures;

FIG. 15B is a plan view showing the film of FIG. 15A, when the water in the reservoir reaches a brewing temperature;

FIG. 16A is a plan view of a heat shrinkable film;

FIG. 16B is a plan view of the film of FIG. 16A shown pulled away from its attachment to the container along its circumference when the water reaches a brewing temperature;

FIG. 17A is a plan view of non-porous film employed in the invention under ambient conditions;

FIG. 17B is a plan view of the underside of the film shown in FIG. 17A wherein the pores of the film have been opened when the water reaches a brewing temperature;

FIG. 18A is partial sectional view of another embodiment of the film which has been scored to provide a continuous line of weakness;

FIG. 18B is a plan view of the film of FIG. 18A, wherein the score line has opened in response to the water reaching a brewing temperature;

FIG. 19A is a partial sectional view of another embodiment of the film which includes two overlapping sections releasably secured to one another;

FIG. 19B is a plan view of the film of FIG. 19A wherein the overlapping sections have separated when the water reaches a brewing temperature;

FIG. 20A is a perspective view of another embodiment of a coffee maker of the present invention;

FIG. 20B is a bottom perspective view of the coffee maker of FIG. 20A;

FIG. 20C is a front elevational view, in section, of the coffee maker shown is FIG. 20A;

FIG. 21 is a plan view of a film partition of the present invention, wherein the partition includes a plurality of apertures;

FIG. 21A is a front elevational view, in section, of a coffee maker similar to FIGS. 20A-20C, wherein the partition of FIG. 21 is utilized;

FIG. 22 is a front elevational view, in section, of still another embodiment of the coffee maker, wherein the assembly is in two separate parts having a partition therebetween;

FIG. 23 is a front elevational view, in section, of another embodiment of the coffee maker in two parts;

FIG. 24 is a partial sectional view of another embodiment of the coffee maker, wherein the filter element snaps into the lower portion of the reservoir;

FIG. 25 is a partial sectional view of another embodiment of the coffee maker, wherein the coffee filter element is secured to the lower portion of the reservoir by means of a compression ring;

FIG. 26 is a front elevational view, in partial section, of a package for storing the coffee makers of the present invention, wherein pre-measured amounts of coffee are in the sealed filter elements such as shown in FIG. 1; and

FIGS. 27 and 28 illustrate another embodiment for packaging of the invention and particularly the coffee maker of FIG. 11, wherein FIG. 27 is a front elevational view, partially in section, which illustrates a freshness package for the packets of FIG. 8, and wherein FIG. 28 is a side elevational view of a box for the other components of the coffee maker.

DETAILED DESCRIPTION OF THE INVENTION

Referring to the drawings and first to FIGS. 1-6, there is shown a single cup, drip-type coffee maker 10 embodying the invention. It should be understood however, that other liquids may be brewed in accordance with the invention so that reference herein to "coffee" is for the sake of convenience only.

The coffee maker 10 of FIGS. 1-6 includes a container 12 in which the brewing operation takes place. The container 12 comprises three compartments, a reservoir 14 for holding water, a filter element or chamber 16 below the reservoir 14 for holding the coffee grounds and a metering element, compartment or chamber 18 below the filter element 16 for receiving and dispensing the brewed coffee. The coffee maker 10 also includes a partition 20 which separates the reservoir 14 from the filter element 16. In accordance with the present invention the partition 20 includes a film which allows passage of the water from the reservoir 14 into

the filter element **16** only when the water is at or reaches coffee brewing temperatures.

The body of the container **12** can be made of a microwave permeable and safe material, such as polypropylene, polyethylene, foamed polystyrene, polycarbonate, coated paper board and the like. In the illustrative embodiment the container preferably is made from polypropylene.

The reservoir **14** of the container **12** is open at the top and includes a rim **24**, a depending side wall **26** and a bottom wall **28**. The rim **24** extends laterally and outwardly from the upper end of the wall **26** to facilitate pouring of the water or other liquid into the reservoir and movement of the coffee maker **10** without spilling. The wall **26** is cylindrical and is stepped and tapered inwardly and includes vertical ribs **30** for strengthening. The bottom wall **28**, in the illustrative embodiment, is in the form of an annular shoulder and includes a relatively large central opening **32**. As illustrated, the reservoir **14** of the invention is configured to contain the appropriate amount of water necessary to brew the desired amount of coffee and to provide the necessary hydrostatic pressure to the partition **20** to cause the partition **20** to allow the flow of water therethrough at the desired brewing temperature.

The partition **20** of FIGS. **2–6** is positioned on and heat sealed to the bottom wall **28** of the reservoir **14** and is disk like or cylindrical in shape. As illustrated, the partition **20** is multi-layered, comprising an upper layer or ply of film **34** having an aperture **36** therethrough and a lower layer or ply of heat sensitive film **38** extending across and closing the aperture **36** and heat sealed to the bottom wall **28**.

The upper or top ply of film **34** prevents sticking of the other or underlying layer or layers of the film to the sealing die which can be used to seal the partition **20** within the container **12**. In particular, films which have a melting point at or about the brewing temperature can stick to the sealing die. The top layer of the film **34** therefore is composed of at least one material having a melting point which exceeds the brewing temperature (e.g. from about 50° to 95° C). Examples of materials for the top layer include high density polyethylene, nylon, polypropylene, and particularly polyethylene terephthalate.

When using a non-stick top layer **34**, it is desirable to provide at least one slit, opening or aperture **36** through the non-stick layer to enable water to pass therethrough when the water is heated because the non-stick top layer **34** does not weaken at the brewing temperature. The top layer **34** as shown in FIG. **2** includes a single centrally positioned aperture **36**. The central aperture **36** provides a pathway for the heated water, stored in the reservoir **14** to contact the underlying heat sensitive layer or layers under brewing conditions. The central aperture **36** may be replaced by multiple apertures to allow the water to contact the underlying heat sensitive layer or layers.

The lower layer or ply **38** in the preferred embodiment is thermally activated by the hot water in the reservoir **14** so that the ply softens, stretches, weakens and breaks or the like due to the hydrostatic pressure of that hot water. Examples of heat sensitive film of the invention include those comprised of an ethylene vinyl acetate or ethylene acrylic acid copolymer, low molecular weight polyolefins, natural waxes, and other thermoplastics with melting points in the range slightly below the brewing temperature e g., about 50° C. to 95° C.

The filter element or chamber **16** includes a side wall **40** which extends downwardly from the bottom wall **28** of the reservoir **14**. As shown, the filter element **16** is tubular or cylindrical with the partition **20** across its upper end supported on the bottom wall **28**. Within the filter element **16** is a lower shoulder **42** for securing a filter **44** thereon and through which the brewed coffee is filtered. The filter **44** preferably is made from filter paper for coffee which is adhesively secured or heat sealed to the annular shoulder **42**. The filter **44** further serves to trap or retain any portion of the thermally responsive portion of the partition **20** which has passed through the coffee grounds in the filter element **16**. As illustrated in FIGS. **2** and **3**, the partition **20** and filter element **16** define an area **46** with sufficient volume for holding the dry coffee grounds and for allowing the expansion of the coffee grounds during brewing without binding or compacting thereof. By so doing, the expanded coffee grounds do not inhibit the flow of water therethrough.

The coffee receiving and dispensing compartment **18** includes a generally cylindrical side wall **48** depending from the bottom wall or shoulder **42** of the filter element **16**, and a bottom wall **50** from which the coffee is dispersed. The side wall **48** includes an upper inwardly sloping portion **52** to facilitate the flow of brewed coffee and a tubular or cylindrical wall **54** depending from the sloping portion **52**. The bottom wall **50** extends across the compartment **18** and forms with the side wall **48**, an area **56** for receiving brewed coffee from the filter element **16**. The bottom wall **50** is sloped downwardly to direct the flow of brewed coffee from the compartment **18** and includes a centrally positioned restrictive aperture **58** from which the brewed coffee is dispensed. The aperture **58** is sized to ensure total wetting of the coffee grounds.

The bottom wall **50** also includes equi-spaced inwardly extending ribs **60** to limit the downward movement of the filter **44** and thereby maintain the area **56** for receiving of brewed coffee.

The coffee maker **10** of FIGS. **1–6** also includes means for positioning or resting the coffee maker **10** above or on receptacle **64** such as a mug. As shown in FIG. **2** and **6**, the coffee maker **10** includes a bottom wall **42** of the filter element **16** which has a greater breadth than the breadth of the mug **64** and which can rest on the mug **64** while the compartment **18** extends into the mug **64**. To prevent vapor lock between the coffee maker **10** and the receptacle **64**, an outwardly extending radially rib **62** is provided. The rib **62** is provided on the bottom wall **42** between the side walls **40** and **48**. In use the rib **62** always maintains a space between the mug **64** and the coffee maker **10** as shown in FIG. **2** and thereby prevents the coffee maker **10** and mug **64** from sealing or sticking together due to vapor lock.

In manufacture, the coffee container **12** can be formed by conventional techniques, such as molding or thermoforming. In the illustrative embodiment of FIGS. **1–6** the container **12** is thermoformed from polypropylene. In the illustrative embodiment of FIGS. **1–6**, the coffee maker **10** includes a container **12** having an overall height of about 2½ inches. The reservoir **14** has a height of about 1½ inches and an average breadth or diameter of about 4 inches for holding about **9** ounces of water. The filter element **16** has a height of about ½ inch

and breadth or diameter of 3½ inches and the receiving and dispensing compartment **18** has a height of about ¼ inch and a breadth of 2½ inches. The ribs **60**, typically can extend inwardly about ¾ inches from the bottom wall **50** and the rib **62**, typically is raised about 1/16 inch. The aperture **58** has a breadth or diameter of about 1/10 inch.

The partition **20** of the described illustrative embodiment has a diameter of about 3¾ inches and includes an upper layer **34** preferably made from polyethylene terephthalate and an aperture **36** having a diameter of about 1 inch. The thickness of the upper layer **34** typically is from about ¼ to about 2 mils. The lower layer **38** is formed from a predominant amount of ethylene vinyl acetate copolymer sold under the designation DAF No. 801 by The Dow Chemical Company. The lower layer **38** typically has a thickness of about ½ to about 2 mils.

In assembling the components of the coffee maker **10**, the filter **44** having a breadth or diameter of 3½ inches, is heat sealed to the bottom wall **42** by a conventional heat sealing die and a premeasured amount of coffee, e.g. about 14 grams for the illustrative coffee maker **10**, is added to the filter element **16**.

Thereafter, the partition **20** of the films **34** and **38** is placed on the bottom wall **28** with the film **38** in contact therewith and heat sealed to the wall **28** by a conventional heat sealing die (not shown). The die comes into contact with the film **34** and through transmission of heat seals the film **38** to the bottom wall **28**.

The coffee grounds for the filter elements may be in any suitable form, preferably in a fine grind.

In using the illustrative coffee maker **10** to brew a cup of fresh drip-type coffee in a microwave oven **66** as shown in FIG. **7**, the reservoir **14** is filled with water, the filled coffee maker **10** is positioned on a cup **64** or the like, and the assembly is placed in the microwave oven **66**. The microwave oven **66** is set for a predetermined time by activating the appropriate button on the control panel **68**. It has been found that in a 700 watt microwave oven, one mug (9 ozs.) of tap water will reach 90° C. in about three minutes. As the water reaches the brewing temperature, e.g. 90° C., the exposed portion of the heat responsive film **38** softens and breaks to open the aperture **36**, whereupon the heated water flows out of the reservoir **14** through the aperture **36** and into the coffee grounds stored in the area **46** of the filter element **16**. There the heated water commingles with the coffee grounds to produce freshly brewed coffee which flows into the compartment **18** and dispensed therefrom through aperture **58**.

In the preferred embodiment of FIGS. **1–6**, the weakened portion of film **38** does not pass into the filter element **16** because the preferred films retain their integrity while allowing water to pass therethrough. However, any portions of the film which does pass into the filter element **16** is retained either in the coffee grounds or by the filter **44** so that it does not enter the receptacle **64**. During this stage of the process, the microwave oven **66** may be turned off and the freshly brewed coffee allowed to continue to flow though the filter **44** and into the receptacle **64** below. The dripping process takes about two minutes. At this point, the assembly is removed from the microwave oven **66**, and the coffee maker **10** removed from the receptacle **64**, leaving a cup of the coffee ready for drinking. In removal, the coffee maker **10** can be tilted to inhibit the dripping of any remaining brewed coffee from the compartment **18** through the restricted aperture **58**.

Alternatively, the coffee maker **10** can be placed on a receptacle, such as a receptacle **64**, and heated water (e.g. about 90° C. to about 100° C.) can be added to the reservoir **14**, whereupon the heated water acts on the exposed portion of the film **38** to allow heated water to flow into the filter element **16** and freshly brewed coffee is produced and dispensed as previously described.

Referring now to FIGS. **8–10**, there is shown another embodiment of the invention, including a partition **38** and filter **44** with coffee therebetween, to thereby form a packet **70** of coffee.

In this embodiment, the packet **70** is formed from a single layer of heat sensitive film **38** and a heat sealable filter paper **44**, wherein the film **38** and filter paper **44** are heat sealed together about their perimeters with the desired amount of coffee therebetween. In turn, the coffee filter **44** of the packet **70** is heat sealed to the bottom wall **28** of the reservoir **14** as shown in FIG. **9**.

Preferably the film **38** is plasticizable in water heated to coffee brewing temperatures. Examples of water plasticizing polymers include ethylene vinyl alcohol copolymer, cellophane, polyacrylamide, polyacrylates, polyvinyl alcohols, polyvinyl pyrrolidone, rice paper, or other films that plasticize with water or fragment in water in the desired temperature range. A preferred example of the film for use in the formation of the partition is a copolymer of ethylene and vinyl alcohol with an ethylene content of up to about 40 mol%, most preferably in the range of from about 29 to 32 mol%.

As illustrated in FIG. **10** water or other liquid of the desired brewing temperature causes the film **38** to fragment or open, allowing the heated water or other liquid to flow into and commingle and brew with the coffee grounds or other foodstuff. The brewed liquid, e.g. coffee, then flows through the filter **44** into the compartment **18** and from which the brewed liquid is dispensed through aperture **58**.

The packet **70** of the invention can be formed by using a form, fill and seal pouch machine. In forming the packets **70**, a pouch is formed in the filter **44**, the pouch is filled with coffee grounds or the like and then the film **38** is placed over and heat sealed about its perimeter to the perimeter of the filter **44** is thereby formed. The packet **70** can then be heat sealed to the bottom wall **28** of the reservoir **14**.

In another embodiment of the invention, and as shown in FIG. **11**, the described packets **70** can be inserted into a reusable container **12** and be used as part of a refill system. In this illustrative embodiment, a reservoir **14** having an outer annular bead or engaging member **72** about a lower portion **74** thereof and a separate compartment **18** having an upper annular end **76** including an annular shoulder **78** and an annular groove **80** therein snap together to receive the components to one another. In use a packet **70** is placed on the annular shoulder **78** of the compartment **18** and the lower portion **74** of the reservoir **14** is inserted in the upper end of the compartment **18** until its lower end **82** abuts the film **38** of the packet **70**, whereupon the components are snapped together to secure the packet **70** within the assembled beverage maker ready for use as previously described.

In this embodiment, the container **12** can be reused with single use packets **70** and thereby provide a refill system of the present invention.

In FIG. **12**, there is shown a coffee maker **10**, wherein the partition **20** is a single ply of film **38** attached to the shoulder **28** of the reservoir **14** and stretched across the

entire inner diameter of the opening **32** separating the reservoir **14** from the filter element **16**.

The film **38** can be constructed so that upon heating the film shrinks causing at least one opening to form. In particular, the film **38** may be provided with at least one area of stress which gives way to an opening when the film begins to shrink. Referring to FIGS. **13A–16B** each of the embodiments of the film **38** is made from a heat shrinkable material, such as, for polyethylene, polypropylene, polyester, vinylidene chloride based copolymers, or other thermoplastic film fabricated with frozen in stress.

More specifically, FIG. **13A** illustrates a shrink film **38** extended across the shoulder **28** the reservoir **14** similar to the construction shown in FIG. **12**. This shrink film **38** is thermally responsive and separates when the water in the reservoir **14** reaches the coffee brewing temperature. In this embodiment, the film **38** forming the partition **20** may have a line of weakness **38A**, which may be continuous or discontinuous. The line of weakness can be either inherent in the film itself, strategically placed there, or both. When the water in the reservoir **14** reaches the brewing temperature, the film **38** separates along the line of weakness **38A** forming the opening **36** as illustrated in **13B**.

FIG. **14A** illustrates a shrink film **38** forming the partition **20** having two lines of weakness **38A** and **38B** which cross one another. A releasable tape **84** can be placed over the lines of weakness **38A** and **38B** to protect them prior to use. Before water is placed in the reservoir **14**, the tape **84** is removed. When the water remains at ambient temperatures, the partition retains the water in the reservoir **14**. However, as the water is heated, the lines of weakness **38A** and **38B** weaken until, when the brewing temperature is reached, the film **38** separates along the lines of weakness as shown in FIG. **14B**, which allows the heated water to pass through the aperture **36** of the partition **20** into the filter element **16**.

Another embodiment of the partition **20** utilizing a shrink film is illustrated by FIGS. **15A** and **15B**. The film **38** is sealed to the bottom wall **28** of the reservoir **14** under tension. When the water temperatures reaches the brewing temperature, the film **38** separates and pulls apart forming a plurality of apertures **36** as shown in FIG. **15B**, thereby allowing the water to pass from the reservoir **14** into the chamber **46** of the filter element **16**. The film **38** in this embodiment may be provided with lines of weakness as indicated by **38A**, **38B** and **38C**.

A further embodiment of the partition **20** includes a shrinkable film **38** attached at its periphery to either the reservoir **14** or the filter element **16**. This is shown in FIG. **16A**. When the water temperature is elevated to the brewing temperature, which also is the thermal responsive range of the shrink film, the film **38** pulls away from the side wall **28** as indicated by the arrows and toward the center of the container **12**. This allows the heated water to pass into the chamber **46** of the filter element **16** through an opening **36** around all or a portion of the periphery of the film **38** as shown in FIG. **16B**.

FIGS. **17A** and **17B** illustrate another embodiment of the coffee maker **10**. In this embodiment, the partition **20** includes a non-porous film **38** which becomes porous at the brewing temperature. Prior to heating, the film prevents water from passing out of the reservoir **14** and into the filter element **16**. When this embodiment of the coffee maker **10** is heated in a microwave oven **66** and the water reaches the brewing temperature, or preheated water is used, the film **38** becomes porous allowing the water to pass through small pores **36**. Examples of such materials include a tightly woven cloth of thermoplastic fiber, needle point carded fabric of thermoplastic fiber, and microporous film structures of various composition.

FIG. **18A** illustrates a further embodiment of the invention, showing the film **38** with a continuous or discontinuous score line **38C** strategically placed in the film **38**. As shown in FIG. **18B**, when the water in the reservoir **14** reaches the brewing temperature, the film **38** ruptures along the score line **38C**, thus allowing the heated water to pass into the filter element **116**.

In another embodiment employing a shrink film as shown in FIG. **19A**, two or more sections of film **38D** and **38E** are overlapped either on the bottom of the reservoir **14** or at the top of the filter element **16** to form an overlapped section identified by numeral **38F**. When the water temperature reaches the brewing temperature, the sections **38D** and **38E** of the film **38** pull away from one another undermining the integrity of the water tight seal of the overlapped section **38F**. The film **38** is thus opened and water flows through the resulting aperture **36** from the reservoir **14** into the filter element **16**. The overlapped section **38F** can vary in size as long as the seal formed by sections **38D** and **38E** remains watertight until the water reaches the brewing temperature and separates as shown in FIG. **19B**.

Referring now to FIGS. **20A–20C**, there is illustrated another embodiment of the coffee or beverage maker of the present invention having a reservoir **14** with a generally rectilinear cross-sectional shape. Specifically, in the illustrative embodiment, the reservoir **14** has a square shape, and includes a rim **24** extending laterally from and about the upper end of the reservoir walls **26** to facilitate pouring of water and movement of the coffee maker **10** without spilling. The reservoir **14** preferably includes vertical ribs **30** for strengthening the walls **26**.

The partition **20** for this embodiment of the invention can be of a variety of configurations of the type previously described and in this embodiment has a square shape. As shown in the illustrative embodiment of FIG. **20C**, the partition **20** is heat sealed to the bottom wall **28** of the reservoir **14** over the opening **32**, and includes a non-toxic heat responsive film **38** such as ethylene vinyl acetate copolymer laminated to a non-stick top layer **34** as preferably illustrated in FIG. **3**.

In the illustrative embodiment of FIGS. **20A–20C**, the filter element **16** also includes side walls **40** having a substantially rectilinear cross-sectional shape and a depending sloping bottom wall **42** to form a generally cone-shaped filter element **16** having its vertex in the center thereof as shown in FIG. **20B**. As shown in FIG. **20C** a filter **44** is positioned along the cone-shaped bottom wall **42** and is supported thereby. The filter element **16** with the sloping walls **42** enhance the hydraulic dynamics of the water flowing through the filter element **16**.

In FIGS. **20A–20C** the illustrative partition **20** includes a single aperture **36**, whereas in the illustrate embodiment shown in FIGS. **21A** and **21B**, the partition **20** includes a plurality of apertures **36** (e.g., four apertures), each of which has a smaller breadth or diameter than the single aperture **36** of FIG. **20C**.

In several previously described embodiments of the invention the reservoir **14** and the filter element **16** were shown formed integral with each other. In the embodi-

ments now described, the reservoir **14** is formed separate from the filter element **16**.

Referring now to FIG. **22**, the illustrated coffee maker **10** includes a first part comprising reservoir **14** and a second part including the filter element **16** with the partition **20** separating the component parts of the container **12**. The film partition **20** includes the film **38** positioned between the reservoir **14** and the filter element **16**. When the reservoir **14** and the filter element **16** are joined, the film **38** is sealed therebetween to form the coffee maker **10** of the invention. Optionally, the film **38** can first be joined to the reservoir **14**, or first joined to the filter element **16** before the remaining part of the coffee maker **10** is joined. The joining process can be by means of cold or hot sealing, with or without additional adhesives, depending upon the sealing characteristics of the film **38** therebetween.

Another embodiment of the invention wherein the reservoir **14** and the filter element **16** are constructed separately is shown in FIG. **23**. In this embodiment the bottom wall **28** of the reservoir **14** extends inwardly to form a central opening or aperture **36**. The partition **20** includes a film **38** which covers the aperture **36** and is sealed to the bottom wall **28**. The film **38** is shown sealed to the underside of the bottom wall **28** but may also be sealed on the topside of the bottom wall **28** as well.

In operation, when the water in the reservoir reaches the brewing temperature, the film **38** opens the aperture **36**. In this embodiment, moreover, the filter element **16** can be independent and not integrally formed with the reservoir **14**. The illustrated filter element **16** can be separately formed and heat sealed or otherwise secured to the top or bottom sides of the bottom wall **28** of the reservoir **14**.

The coffee maker of the present invention may be provided with a filter element **16** and reservoir **14** as separate components which can be releasably engaged when coffee is to be brewed. Referring to FIGS. **24–25** there is shown coffee makers **10** which include reservoirs **14** separate from the filter elements **16**.

In FIG. **24**, the bottom wall **28** of the reservoir **14** is provided with a groove **86** and the rim **88** of the filter element **16** is provided with a corresponding detent **90**. When the detent **90** is snapped into the groove **84**, the reservoir **14** releasably engages the filter element **16**.

FIG. **25** shows an embodiment of the invention in which a compression ring is used to secure the reservoir **14** to the filter element **16**. Specifically, the side wall **26** is provided with threads **92** on the lower outer surface thereof. The threads **92** are adapted to engage a compression ring **94** having corresponding threads **96**. The rim **98** of the filter element **16** is securely held against the underside of the bottom wall **28** of the reservoir **14** by the engagement of the threads **92** with of the compression ring **94**. The compression ring **94** encompasses the entire periphery of both the reservoir **14** and the filter element **16** and thereby draws the rim **98** into sealing contact with the bottom wall **28** to form a liquid impervious seal between the reservoir **14** and the filter element **16**. As shown in FIG. **26**, the film **38** is squeezed between the reservoir **14** and filter element **16** to enhance the integrity of the seal.

While a single cup coffee maker is shown in the illustrative embodiments, it is to be understood that a larger coffee or beverage maker with a correspondingly larger receptacle may be employed for multi-cup brewing or the like. The embodiments of the invention specifically illustrated herein can be adapted to provide more than one serving of freshly brewed coffee or other liquid in the receptacle from which individual servings of coffee or beverage can be poured.

The freshness of the coffee grounds or food stuffs in assembled beverage makers **10** or separable filter elements **16** can be preserved by housing the components in airtight nitrogen-purged containers or bags, or the like. FIG. **26** illustrates an embodiment of a freshness container or bag **102** for packaging beverage makers **10**. The beverage makers contain premeasured amounts of coffee grounds in the filter element **16** which are nested and the bag **102** is sealed at **104** by a suitable heat sealing adhesive or the like until a beverage maker **10** is needed.

FIGS. **27** and **28** are illustrative of a freshness package **102** for the packets **70** of FIG. **8** and of a package or box **106** for the other components of the beverage maker **10** of FIG. **11**.

As stated previously, the beverage makers **10** of the invention can be used to brew coffee as well as other liquids, such as soup, broth, tea, flavored drinks and the like, and the beverage makers of the invention can include different containers and partitions as demonstrated in the illustrative embodiments of the invention.

Thus, the invention in its broader aspects is not limited to the specific described embodiment and departures may be made therefrom with the scope of the accompanying claims without departing from the principles of the invention and without sacrificing its chief advantages.

What is claimed is:

1. A beverage maker for use in a microwave device adapted to dispense a freshly brewed beverage, comprising:

a reservoir for holding heated liquid or liquid to be heated to a temperature for brewing a beverage,

a filter element adapted to hold a substance for brewing the beverage and to receive the heated liquid from said reservoir and dispense a freshly brewed beverage therefrom,

a partition between said reservoir and filter element, including a film adapted to close and seal communication between said reservoir and filter element until liquid in said reservoir is at a temperature for brewing the beverage, whereupon said film is adapted to be melted to provide at last one opening in said film for providing a communication between said reservoir and said filter element and allow the heated liquid to contact the substance and become a freshly brewed beverage, and

a chamber adapted to receive the brewed beverage for said reservoir and to dispense the brewed beverage from the beverage maker.

2. The coffee maker of claim **1** adapted to dispense the freshly brewed coffee into a receptacle therebelow while in the microwave oven.

3. The beverage maker of claim **1**, wherein said film stretches and ruptures from the hydrostatic pressure of the water in the said reservoir in the temperature range of about 50° C. to about 100° C.

4. The beverage maker of claim **1**, wherein said film is selected from the group consisting of ethylene vinyl acetate copolymer, ethylene acrylic acid copolymer, polyolefin, ethylene vinyl alcohol copolymer and rice paper.

5. The beverage maker of claim **1**, wherein said film comprises ethylene vinyl acetate copolymer.

6. The beverage maker of claim 1, wherein said film shrinks.

7. The beverage maker of claim 6, wherein said shrink film comprises a thermoplastic polymer film fabricated with frozen-in stress.

8. The beverage maker of claim 6, wherein said shrink film is selected from the group consisting of polyethylene, polypropylene, polyester or vinylidene chloride based copolymers.

9. The beverage make of claim 1, wherein said film plasticizes with water or fragments in water in the temperature range of about 50° C. to about 100° C.

10. A beverage maker adapted to dispense a freshly brewed beverage, comprising:

a reservoir for holding heated liquid or liquid to be heated to a temperature for brewing a beverage,

a filter element adapted to hold a substance for brewing the beverage and to receive the heated liquid from said reservoir and dispense a freshly brewed beverage therefrom, and

a partition between said reservoir and filter element, including a film adapted to close and seal communication between said reservoir and filter element until liquid in said reservoir is at a temperature for brewing the beverage, whereupon said film is adapted to be melted to provide at last one opening in said film for providing a communication between said reservoir and said filter element and allow the heated liquid to contact the substance and become a freshly brewed beverage ready for dispensing from the beverage maker; and wherein said partition comprises:

an upper layer of film in contact with and impervious to the heated liquid in said reservoir, wherein said upper layer has an aperture therethrough, and

a layer of film underlying said upper film layer for heat sealing said partition within said container between said reservoir and said filter element, wherein said underlying film layer also extends across said aperture until liquid in said reservoir is at a brewing temperature, whereupon said underlying film layer opens to allow said liquid to flow through said aperture into said element for brewing a beverage.

11. The beverage maker of claim 10, wherein said upper layer of film is selected from at least one member of the group consisting of high density polyethylene, nylon and polyethylene terephthalate.

12. The beverage maker of claim 10, wherein said underlying layer of film is selected from at least one member of the group consisting of ethylene vinyl acetate copolymer, ethylene acrylic acid copolymer, low molecular weight polyolefins and natural waxes.

13. The beverage maker of claim 10, wherein said partition includes an upper layer of film comprising polyethylene teraphthalate and a underlying layer of film comprising ethylene vinyl acetate copolymer.

14. A drip-type coffee maker adapted to discharge freshly brewed coffee, comprising:

a reservoir for holding water to be heated to a temperature for brewing coffee,

a coffee filter element adapted to hold coffee grounds and to receive the heated water from said reservoir and dispense freshly brewed coffee therefrom, and

a partition between said reservoir and coffee filter element, including a film comprising a layer of a copolymer of ethylene and vinyl alcohol with an ethylene content of up to about 40 mol%, said film being adapted to be sealed to close communication between said reservoir and coffee filter element until water in said reservoir is heated to a temperature for brewing coffee, whereupon said film is adapted to be melted to provide at least one opening on said film to allow passage of the heated water into said filter element.

15. The drip-type coffee maker of claim 14, wherein said film further comprises an adhesive layer adapted to adhere said copolymer layer to said reservoir.

16. The drip-type coffee element of claim 15, wherein said adhesive layer is the seal and contains a polymer adapted to permit the passage of water therethrough at a brewing temperature.

17. The drip-type coffee maker of claim 16, wherein said polymer is a copolymer of ethylene and vinyl acetate.

18. The drip-type coffee maker of claims 14, wherein the film further comprises a non-stick layer laminated onto an upper surface of said copolymer layer and has a melting point exceeding the brewing temperature.

19. The drip-type coffee maker of claim 18, wherein said non-stick layer covers less than the entire surface of the copolymer layer.

20. A beverage maker for use in a microwave device adapted to dispense a freshly brewed beverage, comprising:

a reservoir for holding water to be heated to a temperature for brewing a beverage,

a filter element adapted to hold a substance for brewing the beverage and to receive the heated liquid from said reservoir and dispense a freshly brewed beverage therefrom,

a partition between said reservoir and filter element, including a film adapted to close and seal communication between said reservoir and filter element until the liquid in said reservoir is at a temperature for brewing the beverage, whereupon said film is adapted to be melted to provide at least one opening in said film for providing a communication between said reservoir and said filter element and allow the heated liquid to contact the substance and become a freshly brewed beverage,

a compartment including a chamber adapted to receive the brewed beverage from said reservoir and to dispense the brewed beverage from the beverage maker, and

co-acting means on said reservoir and said compartment for releasably securing said reservoir, compartment and filter element together.

21. The beverage maker of claim 20 for use as a coffee maker.

* * * * *