UNITED STATES DISTRICT COURT
CENTRAL DISTRICT OF CALIFORNIA

CIVIL MINUTES - GENERAL

Case No.	No. 2:21-cv-03402-GW (AGRx)	Date	March 10, 2022
Title	*K-fee Sys. GmbH v. Nespresso USA, Inc., et al.*		

Present: The Honorable	GEORGE H. WU, UNITED STATES DISTRICT JUDGE	
Javier Gonzalez	None Present	
Deputy Clerk	Court Reporter / Recorder	Tape No.

Attorneys Present for Plaintiffs:	Attorneys Present for Defendants:
None Present	None Present

PROCEEDINGS: IN CHAMBERS - FINAL ORDER ON CLAIM CONSTRUCTION

Attached hereto is the Court's Final Order on Claim Construction.

A scheduling conference is set for March 21, 2022 at 8:30 a.m. The parties shall submit a joint report by March 17, 2022 setting forth their proposed dates for the remaining schedule in this case.

Initials of Preparer JG : IPR2024-00254
Nespresso USA, Inc. Ex. 1052

I. INTRODUCTION

In this patent infringement action, Plaintiff K-fee System GmbH ("K-fee" or "Plaintiff") filed suit against Nespresso USA, Inc. ("Nespresso" or "Defendant") for infringing U.S. Patent Nos. 10,858,176 ("the '176 Patent"), 10,858,177 ("the '177 Patent"), and 10,870,531 ("the '531 Patent") (collectively, the "Asserted Patents"). *See* Docket Nos. 1-1, 1-2, 1-3.[1] Plaintiff sells single-use beverage capsules and systems that use a barcode to convey "optimum brewing parameters." Docket No. 1 at ¶ 3. Plaintiff's products are protected by the Asserted Patents. *Id.* Plaintiff alleges that Defendant's single-use Vertuo coffee pods and related systems infringe the Asserted Patents. Defendant brings declaratory relief counterclaims for invalidity and non-infringement. *See* Docket No. 26.

The parties have filed their Joint Claim Construction and Prehearing Statement and Markman briefs, which present five claim construction disputes. *See* Docket Nos. 70 (Plaintiff's Opening Claim Construction Brief), 71 (Defendant's Opening Claim Construction Brief), 82 (Plaintiff's Responsive Claim Construction Brief), 83 (Defendant's Responsive Claim Construction Brief). The Court held a *Markman* hearing on March 3, 2022. In connection with the hearing, the parties lodged slides, which the Court has considered.

The Court construes the disputed terms as stated herein.

II. BACKGROUND

The Asserted Patents, which share a specification, are entitled "Portion Capsule Having an Identifier."[2] The Asserted Patents "relate[] to a portion capsule for producing a beverage, comprising a base element having a cavity in which a beverage raw material is provided and which is closed by a membrane fastened to the base element." Spec. at 1:11-14. Recognizing that a variety of such beverage capsules were becoming widespread, the inventors observed that "it is possible that the manufacturer's capsules [will be] used in a coffee machine designed by another manufacturer, although they are not suited for it." *Id.* at 1:17-19. The inventors believed "[t]his

[1] Plaintiff is admonished that all future filings must comply strictly with the Local Rules, including the technical requirement for making PDFs text searchable. *See* L.R. 5-4.3.1.

[2] Because the Asserted Patents share a specification, the Court cites the shared specification collectively as "Spec."

may result in significant security issues and/or the coffee machine may be damaged." *Id.* at 1:19-21.

The disclosed beverage capsule sought to solve this problem by affixing "an identifier" to the "membrane fastened to the base element" that seals the capsule such that the identifier "allows to individualize the respective portion capsule." *Id.* at 1:31-34. "In the context of this invention[,] individualizing means that the respective portion capsule can be assigned to a group of capsules that are suitable for the coffee machine preferably." *Id.* at 1:62-65. Also, "individualizing means that those portion capsules that are not appropriate for the coffee machine cannot be inserted into and/or directly fall through the holder, which is designed for the portion capsules in the coffee machine, and/or the coffee machine operates only with the corresponding portion capsules." *Id.* 2:3-8. The coffee machine "will be activated [only] if the detected identifier matches with the [stored] reference." *Id.* at 2:11-12.

In one embodiment, "the identifier may be included in the membrane," "[p]referably" as "a layer or partial layer of the membrane." *Id.* at 2:61-63. Also, "[p]referably the identifier is a machine-readable imprint" such as "a barcode, a logo, or a repeat pattern." *Id*. at 3:1, 3:5-6. The identifier can also be "an electrically conductive section, which can be placed all over the portion capsule, but is localized on the side wall, the edge and/or the floor preferably." *Id.* at 3:8-11. "The electrically conductive section, which is inserted into the coffee machine, can become part of an electric circuit and causes therefore a measurable change, which leads to the identification of the respective portion capsule." *Id.* at 3:11-15. In sum, "[i]f the portion capsule is customized according to the invention, portion capsules that are not in line with the coffee machine will be prevented from inserting into the coffee machine." *Id.* at 3:20-23. The identifier can also control "the temperature, the pressure and/or the amount of water." *Id.* at 3:27.

Figures 2A and 2B "show a portion capsule containing a barcode." *Id.* at 7:31-32.

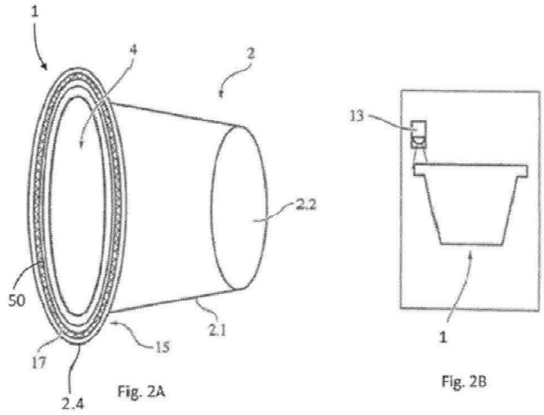

Providing another example, Figures 19 and 20 "show a schematic view of a portion capsule according to an embodiment of the presented invention." *Id.* at 7:62-63.

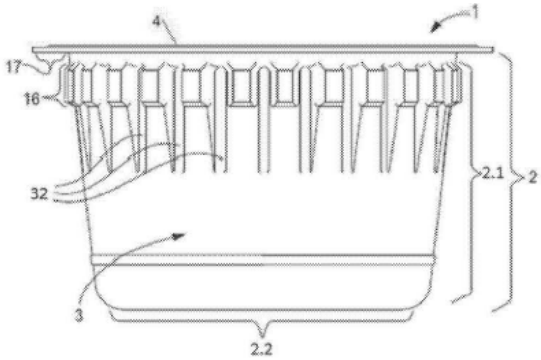

Fig.19

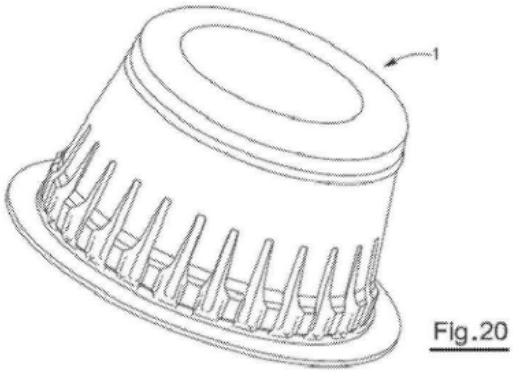

Fig.20

Plaintiff alleges that Defendant infringes independent method Claims 1 and 13, and dependent method Claims 3, 10-12, and 14 of the '176 Patent; independent system Claim 1 and dependent Claims 4, and 5 of the '177 Patent; and independent method Claims 1 and 10, and

dependent method claims 2-3, 5–8, 11, 14, and 16 of the ’531 Patent. *See* Docket No. 1 at ¶¶ 52, 78, 104.

Claim 1 of the ’176 Patent is illustrative of the asserted method claims and it recites:

1. A method of making a coffee beverage comprising:
providing an apparatus including a ***barcode*** reader;
inserting a first portion capsule into the apparatus, the first portion capsule including a first foil lid sealed to a base element having a cavity within which a powdered coffee material is located, the cavity being free of a filter and including a central portion, and a plurality of ribs that are radially spaced, vertically oriented, and configured to extend toward the central portion of the cavity, the base element including a circumferential flange having a top side to which the first foil lid is sealed and an opposing bottom side with a first ***barcode*** located on the bottom side, the base element of the first portion capsule includes an outside surface having a plurality of vertically oriented grooves;
reading the first ***barcode*** with the barcode reader;
controlling a production process of a first coffee beverage based upon the reading of the first ***barcode***;
piercing the first foil lid with a mandrel of the apparatus in a region that is offset from a central axis of the first portion capsule;
sealing the first foil lid against a seal of the apparatus;
introducing heated water into the first portion capsule through a water inlet of the apparatus that is arranged along the central axis of the portion capsule to form the first coffee beverage;
unloading the first portion capsule from the apparatus;
inserting a second portion capsule into the apparatus, the second portion capsule including a second foil lid sealed to a base element having a cavity within which a powdered coffee material is located, the cavity of the second portion capsule being free of a filter and includes a central portion, and a plurality of ribs that are radially spaced, vertically oriented, and configured to extend toward the central portion of the cavity, the base element of the second portion capsule including a circumferential flange having a top side to which the second foil lid is sealed and an opposing bottom side with a second ***barcode*** located on the bottom side and being different from the first ***barcode***, the base element of the second portion capsule includes an outside surface having a plurality of vertically oriented grooves;
reading the second ***barcode*** with the barcode reader;
controlling a second production process of a second coffee beverage based upon the reading of the second ***barcode***, the second production process being different than the first production process;
piercing the second foil lid with the mandrel of the apparatus in a region that is offset from a central axis of the second portion capsule;
scaling the top side of the flange and/or the second foil lid of the second portion capsule against the seal of the apparatus; and
introducing the heated water into the second portion capsule to form the second coffee beverage.

See ’176 Patent at Claim 1 (emphasis added to show disputed claim limitation).

Claim 1 of the '177 Patent is illustrative of the asserted system claims and recites:

1. A beverage system for producing a beverage, comprising:
a portion capsule comprising: a foil lid sealed to a base element having a cavity within which a beverage raw material is provided, the base element comprising a circumferential flange having a top side to which the lid is attached and a bottom side with a ***barcode*** located on the bottom side, and
a beverage machine comprising: a detector to read the ***barcode***, a ***media chute*** configured to receive and support the portion capsule, and a pump controlled to push water into the portion capsule only upon a determination that the read ***barcode*** agrees with a stored reference,
wherein the base element has a ***wall region with an electrically conductive section*** and radially spaced and vertically oriented drawn grooves, the cavity has radially spaced and vertically oriented drawn ribs.

See '177 Patent at Claim 1 (emphasis added to illustrate disputed claim limitations).

For purposes of their claim construction disputes, the parties request construction of five claim limitations across the Asserted Patents, two of which Defendant argues are indefinite. Each of the disputed terms is analyzed below.

III. LEGAL STANDARD

A. Claim Construction

Claim construction is an interpretive issue "exclusively within the province of the court." *Markman v. Westview Instruments, Inc.*, 517 U.S. 370, 372 (1996). It is "a question of law in the way that we treat document construction as a question of law," with subsidiary fact-finding reviewed for clear error pursuant to Fed. R. Civ. P. 52(a)(6). *Teva Pharms. USA, Inc. v. Sandoz, Inc.*, 574 U.S. 318, 325–29 (2015). The claim language itself is the best guide to the meaning of a claim term. *See Vederi, LLC v. Google, Inc.*, 744 F.3d 1376, 1382 (Fed. Cir. 2014). This is because the claims define the scope of the claimed invention. *Phillips v. AWH Corp.*, 415 F.3d 1303, 1312 (Fed. Cir. 2005). But a "person of ordinary skill in the art is deemed to read the claim term not only in the context of the particular claim in which the disputed term appears, but in the context of the entire patent." *Id.* at 1313. Thus, claims "must be read in view of the specification," which is "always highly relevant to the claim construction analysis." *Id. at* 1315 (internal quotations omitted).

Although claims are read in light of the specification, limitations from the specification must not be imported into the claims. *Abbott Labs. v. Sandoz, Inc.*, 566 F.3d 1282, 1288 (Fed. Cir. 2009). "[T]he line between construing terms and importing limitations can be discerned with reasonable certainty and predictability if the court's focus remains on understanding how a person

of ordinary skill in the art would understand the claim terms." *Phillips*, 415 F.3d at 1323.

The prosecution history may lack the clarity of the specification, but it is "another established source of intrinsic evidence." *Vederi*, 744 F.3d at 1382. "Like the specification, the prosecution history provides evidence of how the PTO and the inventor understood the patent." *Phillips*, 415 F.3d at 1317 (citations omitted). "Furthermore, like the specification, the prosecution history was created by the patentee in attempting to explain and obtain the patent." *Id.* "Yet because the prosecution history represents an ongoing negotiation between the PTO and the applicant, rather than the final product of that negotiation, it often lacks the clarity of the specification and thus is less useful for claim construction purposes." *Id.*

Claim construction usually involves resolving disputes about the "ordinary and customary meaning" that the words of the claim would have had "to a person of ordinary skill in the art in question at the time of the invention." *Id.* at 1312–13 (internal quotations and citations omitted). But in some cases, claim terms will not be given their ordinary meaning because the specification defines the term to mean something else. "[A] claim term may be clearly redefined without an explicit statement of redefinition," so long as a person of skill in the art can ascertain the definition by reading the patent documents. *Id.* at 1320; *see also Trustees of Columbia Univ. in City of New York v. Symantec Corp.*, 811 F.3d 1359, 1364 (Fed. Cir. 2016).

Where the patent itself does not make clear the meaning of a claim term, courts may look to "those sources available to the public that show what a person of skill in the art would have understood disputed claim language to mean," including the prosecution history and "extrinsic evidence concerning relevant scientific principles, the meaning of technical terms, and the state of the art." *Phillips*, 415 F.3d at 1314 (internal quotations omitted). Sometimes, the use of "technical words or phrases not commonly understood" may give rise to a factual dispute, the determination of which will precede the ultimate legal question of the significance of the facts to the construction "in the context of the specific patent claim under review." *Teva*, 574 U.S. at 332. "In some cases, the ordinary meaning of claim language as understood by a person of skill in the art may be readily apparent even to lay judges, and claim construction in such cases involves little more than the application of the widely accepted meaning of commonly understood words." *Phillips*, 415 F.3d at 1314. "In such circumstances, general purpose dictionaries may be helpful." *Id.*

B. Indefiniteness

A patent's specification must conclude "with one or more claims particularly pointing out

and distinctly claiming the subject matter which the inventor or a joint inventor regards as the invention." 35 U.S.C. § 112(b); *see also* 35 U.S.C. § 112 ¶ 2 (2006). In order to meet this "definiteness" requirement, "a patent's claims, viewed in light of the specification and prosecution history, [must] inform those skilled in the art about the scope of the invention with reasonable certainty." *Nautilus, Inc. v. Biosig Instruments, Inc.* ("*Nautilus I*"), 572 U.S. 898, 910 (2014). The Supreme Court in *Nautilus I* emphasized that patents must be precise enough to afford clear notice of what is claimed, thereby "appris[ing] the public of what is still open to them," while recognizing that absolute precision is unobtainable given "the inherent limitations of language." *Id.* at 899, 910 (*quoting Markman*, 517 U.S. at 373).

General claim construction principles apply to indefiniteness challenges, but the burdens are different. *See Enzo Biochem, Inc. v. Applera Corp.*, 599 F.3d 1325, 1332 (Fed. Cir. 2010) ("In the face of an allegation of indefiniteness, general principles of claim construction apply") (internal quotations and citations omitted). Although courts construing claim language sit in relative equipoise, a patent is "presumed valid under 35 U.S.C. § 282." *Biosig Instruments, Inc. v. Nautilus, Inc.* ("*Nautilus II*"), 783 F.3d 1374, 1377 (Fed. Cir. 2015). "[C]onsistent with that principle, a fact finder is instructed to evaluate . . . whether an invalidity defense has been proved by *clear and convincing evidence*." *Id.* (*quoting Microsoft Corp. v. i4i Ltd. P'ship*, 564 U.S. 91, 111 (2011)) (emphasis added and brackets removed); *Young v. Lumenis, Inc.*, 492 F.3d 1336, 1345 (Fed. Cir. 2007) ("Because a patent is presumed to be valid, the evidentiary burden . . . is one of clear and convincing evidence.").

IV. ANALYSIS

A. Agreed Claim Terms

The parties have not submitted any agreed constructions.

B. Disputed Claim Terms

1. "barcode" (all Asserted Patents and Claims)

K-Fee's Proposed Construction	Nespresso's Proposed Construction
Plain and ordinary meaning without substituting synonyms for the individual words in this term/phrase.	"machine readable code consisting of parallel bars of different widths that encode more than only two unique binary characters such as 0 or 1"

In essence, the parties agree that plain and ordinary meaning applies, but dispute what that

meaning is. Specifically, Defendant argues that Plaintiff should be held to the plain and ordinary meaning for which it advocated in prosecuting a related patent before the European Patent Office.

Plaintiff rejects Defendant's proposed construction that the claimed barcode must have parallel lines because "[n]o such requirement appears in the claims or specification of the asserted patents." Docket No. 70 at 7. Instead, Plaintiff explains that the patents claim a "barcode located on the bottom side" of the circular flange at the top of the capsule. *See, e.g.*, '176 Patent at 12:63-64 (Claim 1). Moreover, "[w]hen the barcode is circular, the portions of the bars towards the inner portion of the circle are closer together than portions of the bars towards the outer portion of the circle," *i.e.*, they are not parallel. *See* Docket No. 70 at 7. Similarly, Plaintiff argues the claims do not encompass a requirement that the barcode must encode more than zeroes and ones. *Id.* at 8. Rather, "the bars can also be of various patterns and are not restricted." *Id.* at 9. Plaintiff also argues that the extrinsic evidence, including the expert declaration of Dr. Sinhose, supports plain and ordinary meaning because "'[b]arcode is a commonly understood feature incorporated into many different products, and there is no language in the specification or prosecution history of the patents limiting the term barcode.'" *Id.* at 9 (quoting Singhose Dec., Docket No. 70-1, ¶¶ 19, 20-21). Plaintiff also contends that statements previously made by Defendant to the PTO during a never-completed IPR concede that "barcode" was not "limited or defined." *Id.* at 10.

Defendant responds that that Court should reject Plaintiff's proposed plain and ordinary meaning construction because it contradicts "precisely what [Plaintiff] said did not constitute a 'barcode'" in proceedings before the European Patent Office. Docket No. 71 at 1. Because the intrinsic record, "which includes K-fee's unequivocal statements to the EPO that a barcode excludes what K-fee now says it includes," is clear, Defendant argues that Plaintiff should be bound by it. *Id.* at 2-3 (*i.e.*, Plaintiff told EPO that prior art reference Jarisch was not invalidating because it "did not disclose a barcode, but rather a bitcode, among other reasons, 'because the [claimed] barcode . . . is always constructed of bars having variable widths, and therefore contains more than only two binary symbols, such as '0' and '1.'".). Because Plaintiff "clearly and unequivocally stated [during EPO prosecution of a related patent] that a barcode does not include a code based on just two binary characters, such as '0' and '1,' which according to K-fee, would be a bitcode and not a barcode," Defendant argues that Plaintiff must be held to that definition. *Id.* at 6. Specifically, Defendant argues that "[h]aving succeeded in saving its claims from invalidation in Europe based on an interpretation of barcode that excludes Jarisch's bitcode, K-fee

cannot be heard to argue in this Court that the term barcode in the Asserted Patents covers the exact bitcode it told the European Patent Office was excluded from the term 'barcode.'" *Id.* at 8.

In response, Plaintiff argues that Defendant should not be able to change the position it took during an IPR in the now-denied IPR petitions, namely, "that 'no claim terms require formal construction' and that they are interpreted 'consistent with their plain and ordinary meaning from the point of view of one of ordinary skill.'" Docket No. 82 at 1 (citing Docket Nos. 70-3 – 70-5 (denying IPR petitions)). Plaintiff asserts that Defendant's construction is "based on mischaracterized snippets of the record in a foreign proceeding." *Id.* at 1. Further, Plaintiff notes that Defendant does not defend its inclusion of "parallel" in its proposed construction. *Id.* at 2. With respect to the EPO prosecution records, which were provided to the PTO in the underlying prosecution, Plaintiff argues that Defendant "cannot cite to an unequivocable statement or other evidence to justify the departure from the plain and ordinary meaning of the term 'barcode.'" *Id.* at 3. Before the EPO, Plaintiff explains that K-Fee distinguished Jarisch because its "'bit code' comprises a code constructed of two different areas: a reflective area that represents '1' and an absorbing area that represents '0,' which is a binary code constructed of binary symbols ('0' and '1')," whereas the K-Fee barcode "'also uses black ('1') and white ('0') bars but of different variable widths' and contains, for example, more than only two binary symbols, such as '0' and '1.'" *Id.* at 3 (quoting Docket No. 71-3 at 12, 14).

In its response, Defendant argues that "[t]he intrinsic record of the Asserted Patents shows that K-fee repeatedly, explicitly, and consistently defined a 'barcode' as excluding a binary system such as the bitcode disclosed in the Jarisch prior art reference." Docket No. 83 at 1. Although Defendant "agrees with K-fee that the definition K-fee advanced in Europe (which Nespresso is advancing here) is not required by the specification," Defendant's argument is based on holding Plaintiff to its earlier position, especially because its statements to the EPO are "factual statements about the meaning of the identical claim term in a related foreign application, which the Federal Circuit routinely considers in determining the proper construction of claims." *Id.* at 2-3. Further, Defendant states there is no authority for the proposition that statements by a third party in a never-completed IPR should inform claim construction. *Id.* at 3.

As noted, claim construction typically involves resolving disputes over the plain and ordinary meaning of claim limitations. *Phillips*, 415 F.3d at 1312-13. This is one such dispute. The Asserted Patents recite "barcode" numerous times throughout the claims and specification,

suggesting the inventors believed this was a commonly used and well-understood term meant to carry its plain and ordinary meaning. Simply relying on plain and ordinary meaning in this instance, however, does not resolve the parties' dispute. *See, e.g.*, *O2 Micro Int'l Ltd. v. Beyond Innovation Tech. Co.*, 521 F.3d 1351, 1361 (Fed. Cir. 2008) ("A determination that a claim term 'needs no construction' or has the 'plain and ordinary meaning' may be inadequate when a term has more than one 'ordinary' meaning or when reliance on a term's 'ordinary' meaning does not resolve the parties' dispute."); *NobelBiz, Inc. v. Glob. Connect, L.L.C.*, 701 F. App'x 994, 997 (Fed. Cir. 2017) (district court has responsibility to determine the scope of disputed claims and ruling "plain and ordinary meaning" may be insufficient).

The question before the Court is whether statements made by K-fee System GmbH (Plaintiff's privy) before the EPO concerning the meaning of "barcode" should influence the plain and ordinary meaning of that limitation in these proceedings. As an initial matter, the Court agrees with Defendant that the relevant EPO prosecution history is part of the intrinsic record here. Indeed, Plaintiff disclosed those proceedings to the PTO in an Information Disclosure Statement in connection with prosecuting the application that issued as the '176 Patent. *See, e.g.*, Docket No. 71-5 at 8 (line item 21, Letter Regarding Opposition Procedure).[3] Therefore, the Court considers statements made by K-fee to the EPO as part of the intrinsic record. *See V-Formation, Inc. v. Benetton Group SpA*, 401 F.3d 1307, 1311 (Fed. Cir. 2005) ("prior art cited in a patent or cited in the prosecution history of the patent constitutes intrinsic evidence"). With respect to the forum in which those statements were made, the Court agrees that, although "indiscriminate reliance on the prosecution of corresponding foreign applications in the claim construction analysis" is not appropriate, *AIA Eng'g Ltd. v. Magotteaux Int'l S/A*, 657 F.3d 1264, 1279 (Fed. Cir. 2011), an applicant's statements in other patent proceedings may be used to help inform claim construction. *See, e.g.*, *Gillette Co. v. Energizer Holdings, Inc.*, 405 F.3d 1367, 1374 (Fed. Cir. 2005) ("blatant admission by this same defendant before the EPO clearly support[ed]" the court's claim construction).

Plaintiff does not address the statements made to the EPO head-on, either in its opening or responsive claim construction brief. Casting Defendant's references to the EPO record as

[3] Defendant is admonished that all future filings must comply strictly with the Local Rules, including the technical requirement for making PDFs text searchable, and the requirements regarding consecutive pagination and labeling of exhibits. *See* L.R. 5-4.3.1, L.R. 11-5.2, 11-5.3.

"mischaracterized snippets of the record in a foreign proceeding" (Docket No. 82 at 1), without placing the so-called snippets in context or explaining their relevance, is unhelpful. Therefore, the Court will analyze those statements in full to discern what K-fee told the EPO about the plain and ordinary meaning of "barcode."

In the EPO proceedings, K-fee System GmbH defended a related drink capsule patent against a novelty challenge (among other challenges) raised in opposition by Nestec S.A. As part of those proceedings, K-fee sent a letter to the EPO regarding "Opposition vs. 3 023 362 B1" in which it discussed at length the plain and ordinary meaning of "barcode." *See* Docket No. 71-3. K-fee began by explaining, "the term 'barcode' is a well-defined term that is clearly understood by the person skilled in the art and therefore requires no further interpretation. A barcode is a line code consisting of bars having variable width." *Id.* at 3. K-fee stated that "the typical barcodes that have been used for decades by the billions" are known to "essentially everyone" and are "two-width or multi-width codes, which means that at least two bars of different width are located within the code." *Id.* at 3-4. K-fee averred that "[a] person skilled in the art who infers from claim 1 of the contested patent that the identifier is specified as a barcode will therefore necessarily infer one of the aforementioned barcodes, which are not only generally known and well defined, but whose design is specified in internationally applicable standards." *Id.* at 4.

Further, K-fee explained that "barcode" does not encompass things like QR codes, but rather "when reference is only made it to a 'Barcode', the person skilled in the art then knows that this always and exclusively refers to the 'classic Barcode', which is then occasionally also referred to as 'simple Barcode', '1D' or 'linear Barcode'." *Id.* K-fee identified this simple or classic barcode as having one defining feature: "The sole decision-making criterion is that this simple barcode – which is referred to in claim 1 – is a barcode that consists of bars of variable width." *Id.*; *see also id.* at 8 (POSA "defines the term 'barcode' as a line code arranged of black and white bars, wherein the bars can have variable widths"); *id.* at 10 ("**In summary, we note that the person skilled in the art at all times defines the term 'barcode' as a line code constructed of bars having variable widths.**") (emphasis in original); *id.* at 17 ("Whenever the cited prior art refers to a barcode, that is to say a code relying on stripes of variable widths, the word barcode is also used explicitly and without digression."); *id.* at 19 (K-fee's expert, who is a POSA, said he "understands a barcode as cited in claim 1 of the patent in dispute to be a code made up of lines

having variable widths," and he does "not interpret the bit code cited in document D1[4] as such a barcode").

Next, K-fee explained that prior art reference D1 did not disclose a "barcode." *See id.* at 11 (Nestec argues "that a barcode is referenced therein. But this conclusion is incorrect. . . . [because] the code is at that location explicitly and exclusively referred to as 'bit code.'"). In distinguishing the claimed "barcode" from the type of "bit code" disclosed in the prior art, K-fee explained, the disclosed bit code "comprises a code constructed of two different areas: a reflective area that represents '1' and an absorbing area that represents '0'. The 'bit code' disclosed here is therefore strictly a binary code constructed of two binary symbols ('0' and '1')." *Id.* at 12. Therefore, D1 "discloses a 'bit code', but not a barcode, because the barcode – as shown above – is always constructed of bars having variable widths, and therefore contains more than only two binary symbols, such as '0' and '1'." *Id.*

K-fee supported its position with reference to "The Barcode Encyclopedia," which explains "that a barcode is not automatically a binary code, even though it only knows the two elements 'line' and 'gap', because these two elements can specifically have variable widths and can as a result not only represent the two states '0' and '1', but others as well." *Id.* "This means that a barcode can be, but is not necessarily, a bit code. It is therefore a special form of the binary code." *Id.* at 13. K-fee explained, "It is readily apparent that not every 'bit code' is automatically a barcode. For example the first sequence of zeros and ones disclosed in document D1 is not a barcode because the lines of other thicknesses, as are typical for the barcode, are absent. But a Morse code is for example also a bit code, but not a barcode." *Id.* at 15. With respect to example figures, K-fee stated that "[t]he code shown in figure 2b, which is based on 'geometric shapes 32', is also unambiguously designated as something other than a barcode." *Id.*at 16.

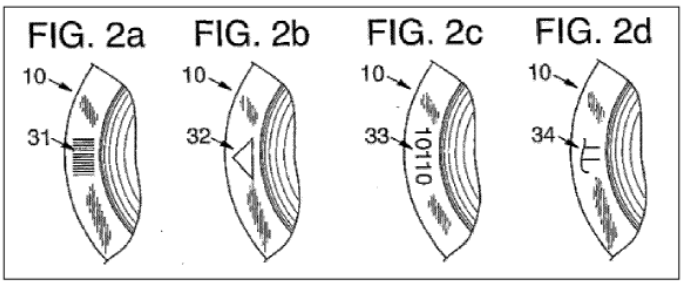

[4] D1 refers to European Patent WO 2011/141532 A1, which relates to a capsule for preparing a beverage comprising a container containing beverage ingredients and a code that can be identified or read by external means. *See* https://patentscope.wipo.int/search/en/detail.jsf?docId=WO2011141532. Nestec S.A. is a listed applicant, along with Jarisch, et al. (*hereinafter*, "D1" or "Jarisch").

See id. (describing 2a as a barcode; 2b as "something other than a barcode;" and 2c as "classic bit code").

After providing this background, K-fee concluded that the prior art reference D1 "contains no **immediate and unambiguous** disclosure of a barcode that is arranged on the bottom side of the capsule flange." *Id.* at 17 (emphasis in original); *see also id.* ("A person skilled in the art would then also not have been able to simply infer the design of the bit code disclosed in document D1 as a barcode."); *id.* at 19 ("A disclosure of a barcode or a code having bars of variable widths cannot be found. Since the bar thickness is not addressed in any way whatsoever, there is then also no implied disclosure of a barcode [in D1].").

From this record, K-fee made clear two things about the plain and ordinary meaning of "barcode." First, a barcode is a line code consisting of bars having variable width. Second, the bit code cited in D1 is not a barcode because it has no lines of variable width. Accordingly, the Court construes "barcode" as having its plain and ordinary meaning (*i.e.*, a code having bars of variable width, which includes the lines and gaps), the scope of which is understood by the clear and unequivocal statements K-fee made to the EPO (*i.e.*, the scope of barcode does not include the type of bit code disclosed in Jarisch/D1). As this case proceeds, Plaintiff will not be heard to advocate for a different scope of "barcode" than that used to defend its related European patent. After all, as K-fee noted before the EPO, "It appears disingenuous when the same [] party claims the exact opposite of the statement made in the declaration before the USPTO, only because its objective is now to destroy the patent of a third-party in the present opposition proceedings and its objective is no longer to obtain its own patent before the USPTO." Docket No. 71-3 at 21. Likewise, by analogy, Plaintiff may not seek a different plain and ordinary meaning than that for which it argued strenuously before the EPO because a different meaning would serve different interests here.

Taking "barcode" in the context of the Asserted Patents as a whole, the Court concludes that plain and ordinary meaning applies, as further explained before the EPO. Thus, the Court need not resort to extrinsic evidence to construe this term.

2. (a) "wall region with an electrically conductive section" ('177 Patent - asserted Claim 1; '531 Patent - asserted Claim 1)

   (b) "base element comprises an electrically conductive section" ('531 Patent - asserted Claim 11)

K-Fee's Proposed Construction	Nespresso's Proposed Construction
(a) Plain and ordinary meaning without substituting synonyms for the individual words in this term/phrase.	"wall region where some but not all of the wall region is electrically conductive"
(b) Plain and ordinary meaning without substituting synonyms for the individual words in this term/phrase.	"base element where some but not all of the base element is electrically conductive"

The parties analyze these interrelated claim limitations together and the Court will do the same. The parties dispute whether the plain and ordinary meaning of "electrically conductive section" in these limitations spans the entire "wall region" or "base element," or only a portion thereof.

Plaintiff argues that neither the claims nor specification and prosecution history supports the suggestion that the electrically conductive region of the relevant element covers "some but not all" of that element. Docket No. 70 at 12. Rather, Plaintiff argues that the specification shows "the identifier can be 'an electrically conductive section, which can be placed all over the portion capsule, but is localized on the side wall, the edge and/or the floor preferably.'" *Id.* at 13 (quoting Spec. 3:8-11). Accordingly, Plaintiff concludes that "there is nothing that precludes the claimed 'section' from encompassing the entirety of the wall or base element of the capsule." *Id.*

Defendant argues that its "construction makes clear that the 'section' that is 'electrically conductive' must be a distinct part of the 'wall region' or 'base element' that is less than the entire 'wall region' or the entire 'base element.'" Docket No. 71 at 11. Defendant rejects Plaintiff's construction because it reads out the term "section" and treats it as "entirety." *Id.* Indeed, Defendant notes that "[t]he plain meaning of the term 'section' connotes a distinct part of a whole that is less than the whole itself." *Id.* "Put another way, under K-fee's reading of the claims, 'section' and the '[wall] region' [or 'base element'] are the same, rendering the term "section" superfluous." *Id.* at 13. Defendant also argues that Plaintiff's construction would be contrary to the specification's description of the identifier," because, "[w]ith no boundary to the 'section' that is electrically conductive, there would be no way to distinguish between proper or improper capsules or to select the processing parameters, which would defeat the purpose of the claimed feature as an identifier." *Id.* at 14 (noting every example of an "electrically conductive section" is a discrete area).

In response, Plaintiff argues that "comprising" is well understood to mean "including but not limited to." Docket No. 82 at 5. "This means the electrically conductive section could cover some or all of the base element" or "wall region." *Id.* Further, Plaintiff argues that Defendant previously identified prior art reference Yoakim as invalidating because it contained an aluminum capsule (*i.e.*, the entirety of the wall region and base element were electrically conductive). *Id.* at 5-6.

In its response, Defendant rejects Plaintiff's reliance on conclusory expert testimony concerning this limitation, noting that "[e]xpert testimony is disfavored in claim construction where it is not necessary to elucidate technical aspects of the claimed subject matter." Docket No. 83 at 6. Further, Defendant argues the portion of the specification on which Plaintiff relies instead shows that the "electrically conductive section" can be placed anywhere on the capsule, not that it is the entire capsule. *Id.*

As quoted above, Claim 1 of the '177 Patent discloses, in relevant part, a base element "wherein the base element has ***a wall region with an electrically conductive section*** and radially spaced and vertically oriented drawn grooves, the cavity has radially spaced and vertically oriented drawn ribs." '177 Patent at 12:66-13:2 (emphasis added). Relatedly, Claim 11 of the '531 Patent discloses, in relevant part, a method for using a portion capsule for making a coffee beverage "wherein the method comprises engaging the portion capsule with a pair of holding arms, and wherein ***the base element comprises an electrically conductive section***." '531 Patent at 14:23-26 (emphasis added).

A review of this claim language taken in the context of the entire specification shows that plain and ordinary meaning applies. The Court rejects Plaintiff's suggestion, however, that plain and ordinary meaning should be applied in a way that renders superfluous the term "section." *See Wasica Fin. GmbH v. Cont'l Auto. Sys., Inc.*, 853 F.3d 1272, 1288 n.10 (Fed. Cir. 2017) ("It is highly disfavored to construe terms in a way that renders them void, meaningless, or superfluous."); *SimpleAir, Inc. v. Sony Ericsson Mobile Commc'ns AB*, 820 F.3d 419, 429 (Fed. Cir. 2016) ("It is true that "interpretations that render some portion of the claim language superfluous are disfavored.").

The applicants would not have claimed an electrically conductive "section" if they meant to claim "part or all" of the wall region or base element is electrically conductive. As Defendant observes, the examples given in the specification show the claimed "electrically conductive

section" as being a discrete area or portion of the wall region/ base element, not all of it. *See, e.g.*, Spec. at 9:16 (citing Fig. 6, element 2.3), 9:38 (citing Fig. 9, element 10), 9:44 (citing Fig. 10, element 10), 10:1-4 (citing Fig. 15 at element 11); *see also* Figs. 6, 9-11, 15.

Neither use of the word "comprising" nor the portion of the specification on which Plaintiff relies suggests otherwise. Rather, as Plaintiff notes, "comprising" means "including but not limited to." Thus, the claim language conveys that the wall region includes but need not be limited to an electrically conductive section (*i.e.*, it may have other features as well as the electrically conductive section). Further, the specification explains that, in one embodiment, "the identifier is an electrically conductive section, which can be placed all over the portion capsule, but is localized on the side wall, the edge and/or the floor preferably." Spec. at 3:8-11. When read in context, this teaches that the "electrically conductive section" can be placed anywhere on the portion capsule and is "preferably" placed on "the side wall, the edge, and/or the floor." This does not suggest that the entire capsule is electrically conductive. Because the Court finds that the plain and ordinary meaning (*i.e.*, consistent with Nespresso's suggestion) is clear from the patents, the Court need not resort to extrinsic evidence to reach this conclusion.

3. "grooves are free from extending all the way into a region of the base element that is immediately adjacent to the flange" ('531 Patent - asserted Claim 5)

K-Fee's Proposed Construction	Nespresso's Proposed Construction
Plain and ordinary meaning without substituting synonyms for the individual words in this term/phrase.	Indefinite

Claim 5 of the '531 Patent claims a method for using a portion capsule for producing a beverage, where "the base element has a wall region with an electrically conductive section and radially spaced and vertically oriented grooves," "wherein the ***grooves are free from extending all the way into a region of the base element that is immediately adjacent to the flange***." '531 Patent at 13:28-30, 14:30-33 (emphasis added). The parties dispute whether the emphasized portion of the claim is indefinite.

Plaintiff argues that Defendant fails to show indefiniteness by clear and convincing evidence, including its failure to submit evidence of how a POSA would understand this term. Docket No. 70 at 13-14. Plaintiff argues that "immediately adjacent" is clear on its face and means "directly next to or beside." *Id.* at 14. Further, Plaintiff argues that "a POSA would have

understood the claim term" by its plain and ordinary meaning, that is, "the grooves do not extend all the way to the flange" or "the grooves do not extend all the way into a region of the base element that is beside or next to the flange." *Id.* at 15 (citing Fig. 19). Plaintiff submits expert testimony to support its position. *Id.* at 15-16.

Defendant argues that "[e]ven if it is assumed that the [claimed] region starts at the flange to which it is 'immediately adjacent,' there is no way to tell where it ends." Docket No. 71 at 18. Additionally, Defendant argues that "the term 'all the way' is highly subjective on its face." *Id.* Defendant also contends that "free from extending" is indefinite because "free from" usually means "without," and saying, "grooves are without extending all the way" is "nonsensical." *Id.* Thus, Defendant concludes that "the claim language says that the grooves must be 'free from' extending an unknown distance into a region of unknown bounds." *Id.* at 19.

Plaintiff responds that Defendant's argument "attempts to place a burden on K-fee to define the invention with mathematical precision, but there is no such requirement." Docket No. 82 at 8 (citing *Invitrogen Corp. v. Biocrest Mfg., L.P.*, 424 F.3d 1374, 1384 (Fed. Cir. 2005) ("a patentee need not define his invention with mathematical precision in order to comply with the definiteness requirement")). Plaintiff explains that "as illustrated in annotated Figures 19 and 21 of the '531 patent, the grooves 32 (green) do not extend all the way into a region (purple dashed lines) of the base element 2 that is immediately adjacent to the flange 17 (red). There is a gap (yellow) between the grooves and the flange." *Id.*

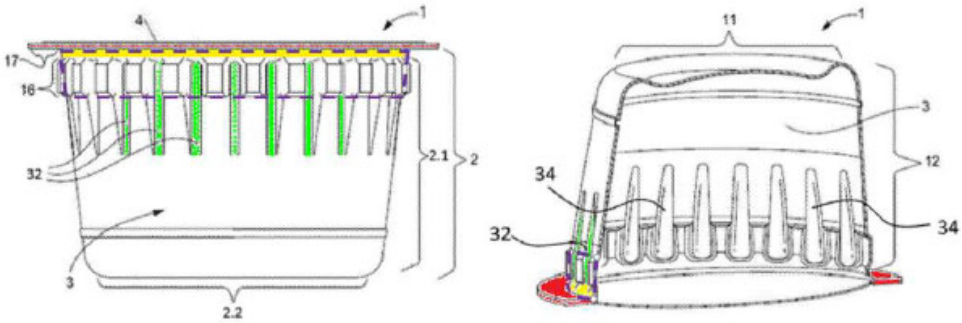

Fig.19 Fig.21

See id. at 9. Plaintiff also rejects Defendant's substitution of dictionary definitions without regard for the specification, arguing that "[t]he Court should not blindly, and without considering the intrinsic evidence and the understanding from a POSA, replace terms in a claim with off-the-shelf dictionary definitions." *Id.* Plaintiff argues that Defendant has not carried its burden to show

indefiniteness where it "provides no evidence and presents only attorney arguments, which fail to show by clear and convincing evidence that a POSA would not understand the meaning of the term." *Id.*

Defendant responds that Plaintiff's "proposed 'ordinary meaning' completely ignores the word 'region' in this claim term." Docket No. 83 at 9. Defendant argues that Plaintiff "could have drafted claims to read 'the grooves do not extend all the way to the flange,'" but it did not. *Id.* Defendant contends that "a person of ordinary skill would not be able to determine whether the grooves extended all the way into the undefined region 'immediately adjacent to the flange' because there are no 'objective boundaries' to the recited region." *Id.*

"[A] patent is invalid for indefiniteness if its claims, read in light of the specification delineating the patent, and the prosecution history, fail to inform, with reasonable certainty, those skilled in the art about the scope of the invention." *Nautilus, Inc. v. Biosig Instruments, Inc.*, 572 U.S. 898, 901 (2014). The party seeking to show indefiniteness "must establish it by clear and convincing evidence." *Dow Chem. Co. v. Nova Chems. Corp.*, 809 F.3d 1223, 1227 (Fed. Cir. 2015).

The Court concludes that Defendant has not carried its burden by clear and convincing evidence to show indefiniteness. When read in context of the entire patent, including illustrative Figures 19 and 21, the disputed limitation is clear on its face. Nothing in the intrinsic record or otherwise suggests that a POSA would not understand this limitation. Accordingly, the limitation is given its plain and ordinary meaning and is not indefinite.

4. "lower section" / "upper section" ('531 Patent - asserted Claims 8, 16)

K-Fee's Proposed Construction	Nespresso's Proposed Construction
Plain and ordinary meaning without substituting synonyms for the individual words in this term/phrase.	Indefinite

The parties dispute whether "lower section" and "upper section" can be understood by a POSA. Claims 8 of the '531 Patent discloses:

> 8. The method according to claim 1, wherein the method comprises controlling a production process of the beverage according to the read barcode, and
> *wherein the wall comprises an **upper section** and a **lower section**, the **upper section** is located adjacent to the*

> *flange, and the **lower section** is located in between the **upper section** and a bottom of the base element, wherein the **upper section** comprises a circumferential border and the wall of the **lower section** is angled, with respect to the **upper section**, and is tapered towards a bottom of the base element.*

See '531 Patent at Claim 8 (emphasis added). Claim 16 also contains the emphasized language. *See id.* at Claim 16.

Plaintiff argues that Defendant does not explain why this term is indefinite and Defendant "had the opportunity to provide a POSA's opinion on this term, but provided none." Docket No. 70 at 16. Further, Plaintiff notes that Defendant's invalidity contentions did not identify these terms as indefinite. *Id.* Plaintiff explains that "[t]he claims inform the scope of these terms," that is, "the upper and lower sections are part of the wall," and they are defined in relation to the flange and base element, as well as each other. *Id.* at 17. Plaintiff argues that, as shown in Figure 19, "[t]he upper section is located adjacent to the flange 17 and comprises the circumferential border 16;" and "[t]he lower section is located between the upper section and the bottom 2.2 of the base element 2, [and] is angled with respect to the upper section, and is tapered towards the bottom 2.2 of the base element 2." *Id.*

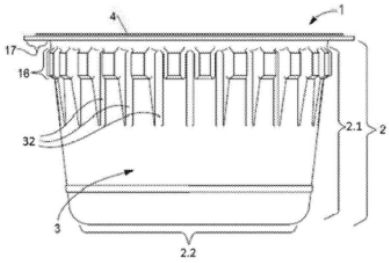

Fig.19

Id. (citing '531 Patent, Fig. 19).

Defendant argues these terms are indefinite because they "fail to specify any objective boundaries to the scope of the claim discernable by a person of ordinary skill in the art." Docket No. 71 at 20. Defendant acknowledges that the claim language provides the relative location of these terms with respect to other components but argues that the language "does not show how the 'upper section' is delineated from the 'lower section.'" *Id.* at 20. Defendant argues, "in the below annotated Figure 19, one might say that at least the grooves 32 in the pink "upper" section are angled with respect to the yellow "lower" section," but "that is not the interpretation of the claims that K-fee is applying here." *Id.* at 20-21.

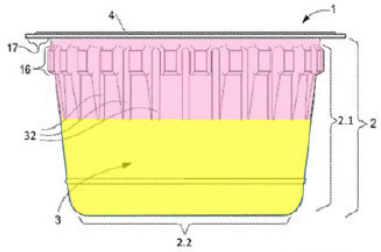

Fig.19

Id. at 21. Further, Defendant rejects Plaintiff's expert testimony because it only states that the terms "'lower section' / 'upper section' simply describe two different portions of the wall of the claimed capsule," without providing anything to "delineate the objective boundaries of the upper and lower section." *Id.*

Plaintiff responds that the claims and specification make these terms clear on their face: "the upper and lower sections are part of the wall," with further relational context provided with respect to the flange and each other. Docket No. 82 at 9-10.

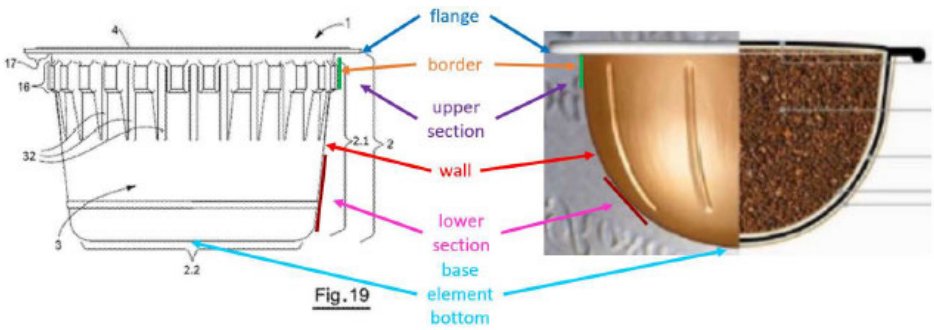

See id. at 10. Plaintiff argues that Defendant's accused capsule meets these limitations. *Id.*

In response, Defendant disagrees that the relational terms "provide sufficient delineation to make these terms definite." Docket No. 83 at 10. Even using Plaintiff's preferred embodiment in Figure 19, Defendant argues that the language "upper section" and "lower section" are indefinite because they could be defined in any of the following ways:

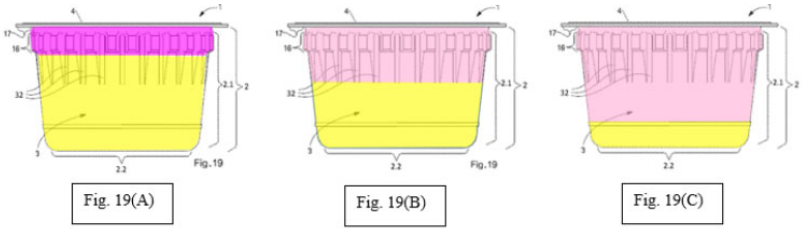

Id. at 10. Defendant further argues that, in any event, "the Accused Products do not contain any

of these identifying features." *Id.*

The Court concludes that Defendant has not shown by clear and convincing evidence that these terms are indefinite. The Court disagrees that more delineation is needed; the relational terms are straightforward and provide sufficient context to understand what is claimed. Defendant frames its indefiniteness argument in terms of Plaintiff's infringement theory, but Plaintiff's theory does not provide evidence of indefiniteness. Rather, this presents an infringement question (*i.e.*, does "a base that is continuously curved, with no discontinuous angle" meet the "upper section" and "lower section" limitations). *See, e.g.*, *PPG Indus. v. Guardian Indus. Corp.*, 156 F.3d 1351, 1355 (Fed. Cir. 1998) ("after the court has defined the claim with whatever specificity and precision is warranted by the language of the claim and the evidence bearing on the proper construction, the task of determining whether the construed claim reads on the accused product is for the finder of fact"). Accordingly, the limitation is given its plain and ordinary meaning and is not indefinite. Because the intrinsic record supports this conclusion, the Court need not resort to extrinsic evidence.

5. "media chute" ('177 Patent - asserted Claim 1)

K-Fee's Proposed Construction	Nespresso's Proposed Construction
Plain and ordinary meaning without substituting synonyms for the individual words in this term/phrase.	"channel through which the portion capsule passes to a lower level"[5]

The parties dispute whether "chute" encompasses "passing through."

Plaintiff argues that a POSA would understand "media chute" to have its plain and ordinary meaning. Docket No. 70 at 18. Plaintiff argues that the patent does not limit "media chute" to a "channel" through which the capsule "passes to a lower level." *Id.* Plaintiff notes that, in one embodiment, the patent "describes that 'the media chute or insertion shaft 26 of an insertion shaft housing 23 [has] a port for inserting the portion capsule in the coffee machine,'" but this example should not be read into the claims. *Id.*

Defendant argues that its construction reflects the plain and ordinary meaning of the word "chute." Docket No. 71 at 15 (citing, *e.g.*, a laundry chute, the game "Chutes and Ladders").

[5] At the hearing, Defendant proposed an alternative construction of: "channel through which an approved portion capsule may pass to a lower level."

Defendant argues that "the specification makes clear that the chute is a channel through which the portion capsule passes." *Id.* at 16. Defendant explains that Figure 18 shows that "[t]he portion capsule needs the rotation for passing the media chute's port and falling in the intended position afterwards." *Id.* (citing '177 Patent at 10:61–63). That is, if the capsule doesn't match, the gear won't turn to rotate the capsule and won't allow it to fall into the intended position. *Id.* In contrast, Defendant explains that its portion capsule "is placed directly in [a] cup by the user, and it does not move from that position until brewing is complete and it is extracted." *Id.* at 17. Thus, Defendant argues that "[t]he intrinsic record does not support K-fee's reading of 'chute' to encompass this mechanism." *Id.* To the extent Plaintiff's infringement contentions rest on a definition of the capsule sitting in a cup as opposed to passing through a chute, Defendant argues this is not plain and ordinary meaning.

Plaintiff responds that a POSA would not consider unrelated extrinsic evidence, like a board game, to understand what "chute" means. Docket No. 82 at 7. The claim terms require only "a media chute configured to receive and support the portion capsule," and they do not "limit 'media chute' to a 'channel' or passing the portion capsule to a 'lower level.'" *Id.* Plaintiff argues that Defendant "pulled those limitations from an example in the specification and the extrinsic evidence to try to narrow the plain meaning of 'media chute.'" *Id.*

Defendant responds that its construction reflects plain and ordinary meaning of the word "chute." Docket No. 83 at 7. Defendant observes that Plaintiff argues "media chute" "should be ascribed its plain and ordinary meaning, but never substantiates that it has one, let alone explains what it is." *Id.* Defendant argues that the only relevant portion of the specification supports its construction because "Figure 18 depicts a vertical, drop-in 'media chute or insertion shaft 26' in which the portion capsule passes a gear wheel on its way down to the brewing chamber at a lower level." *Id.* at 8.

The Court agrees that plain and ordinary meaning applies but observes that it must resolve the parties' dispute over whether the plain and ordinary meaning of "chute" suggests that the capsule must "pass through." The specification sheds light on what a "media chute" is in the context of the invention. For example, it explains that the purpose of the media chute is to be "configured to receive and support the portion capsule." *See* Spec. at Abstract. It also teaches that "one or more gearwheels, may be added to the media chute in order to guarantee that incorrect portion capsule cannot be inserted into the coffee machines by passing the media chute." Spec. at

2:22-25. "Passing the media chute" suggests passing through. But the specification also explains that "individualizing [the portion capsules] means that those portion capsules that are not appropriate for the coffee machine cannot be inserted into ***and/or*** directly fall through the holder, which is designed for the portion capsules in the coffee machine, ***and/or*** the coffee machine operates only with the corresponding portion capsules." *Id.* at 2:3-8 (emphasis added). In other words, the invention accomplishes its task of preventing non-approved capsules from being used in the relevant coffee machines in one of three ways: (1) preventing the cartridge from being inserted at all; (2) preventing the cartridge from being inserted and directly falling through the holder; and (3) allowing insertion but preventing operation altogether if the wrong capsule has been inserted. *See also id.* at 5:48-50 ("The mean for detection or mechanical fitting is preferably located in the region of the media chute *or* in the region of the device for producing the beverage.").

This shows that the specification's explanation—"alternatively or additionally," "one or more gearwheels" can be added to the media chute "to guarantee that incorrect portion capsule[s] cannot be inserted into the coffee machines by passing the media chute"—provides one example of accomplishing capsule verification. *Id.* at 2:23-25; *see also id.* at 2:49-59, *id.* at Fig. 18. But the specification as a whole demonstrates this is not the only way it can be accomplished according to the claimed invention. Accordingly, the Court declines to read into the claims a component of "passing through." With this clarification, the Court concludes that plain and ordinary meaning applies to "a media chute configured receive and support the portion capsule."

V. CONCLUSION

For the reasons stated, the Court construes the disputed claim terms as follows:

Term	Court's Construction
"barcode"	Plain and ordinary meaning, as further explained before the EPO.
"wall region with an electrically conductive section"	Plain and ordinary meaning
"base element comprises an electrically conductive section"	Plain and ordinary meaning
"grooves are free from extending all the way into a region of the base element that is immediately adjacent to the flange"	Plain and ordinary meaning
"lower section" / "upper section"	Plain and ordinary meaning
"media chute"	Plain and ordinary meaning, as clarified.

The parties shall submit a joint report by March 17, 2022 setting forth their proposed dates for the remaining schedule in this case. The Court sets a scheduling conference for March 21, 2022.