Europäisches Patentamt
European Patent Office
Office européen des brevets

Bescheinigung	Certificate	Attestation
Die angehefteten Unterlagen stimmen mit der als ursprünglich eingereicht geltenden Fassung der auf dem nächsten Blatt bezeichneten europäischen Patentanmeldung überein.	The attached documents are exact copies of the text in which the European patent application described on the following page is deemed to have been filed.	Les documents joints à la présente attestation sont conformes au texte, considéré comme initialement déposé, de la demande de brevet européen qui est spécifiée à la page suivante.

Patentanmeldung Nr. **Patent application No.** **Demande de brevet n°**

08171069.1 / EP08171069

The organization code and number of your priority application, to be used for filing abroad under the Paris Convention, is EP08171069.

Der Präsident des Europäischen Patentamts;
Im Auftrag

For the President of the European Patent Office

Le President de l'Office européen des brevets
p.o.

R.C. van Dijk

EPA/EPO/OEB Form 1014 12.08

Anmeldung Nr:
Application no.: 08171069.1
Demande no :

Anmeldetag:
Date of filing: 09.12.08
Date de dépôt :

Anmelder / Applicant(s) / Demandeur(s):

Nestec S.A.
Avenue Nestlé 55
1800 Vevey/CH

Bezeichnung der Erfindung / Title of the invention / Titre de l'invention:
(Falls die Bezeichnung der Erfindung nicht angegeben ist, siehe Beschreibung.
If no title is shown please refer to the description.
Si aucun titre n'est indiqué se référer à la description.)

Capsule for preparing a beverage by centrifugation in a beverage preparation device and device adapted therefore

In Anspruch genommene Priorität(en) / Priority(Priorities) claimed / Priorité(s) revendiquée(s)
Staat/Tag/Aktenzeichen / State/Date/File no. / Pays/Date/Numéro de dépôt:

Internationale Patentklassifikation / International Patent Classification / Classification internationale de brevets:

A47J31/00

Am Anmeldetag benannte Vertragstaaten / Contracting States designated at date of filing / Etats contractants désignées lors du dépôt:

AT BE BG CH CY CZ DE DK EE ES FI FR GB GR HR HU IE IS IT LI LT LU LV MC MT NL NO PL PT RO SE SI SK TR

Capsule for preparing a beverage by centrifugation in a beverage preparation device and device adapted therefore

The present invention relates to a capsule and a device for preparing a beverage from a beverage substance contained in the capsule by passing a liquid through the substance using centrifugal forces.

It is known to prepare beverages wherein a mixture consisting of brewed coffee and coffee powder is separated with centrifugal forces. Such a mixture is obtained by bringing hot water and coffee powder together for a defined time. The water is then forced through a screen, on which screen powder material is present.

Existing systems consist of placing the coffee powder in a receptacle which is usually a non-removable part of a machine such as in EP 0367 600B1. Such devices have many disadvantages. Firstly, the coffee powder must be properly dosed manually in the receptacle. Secondly, the centrifuged coffee waste becomes dry and it must be removed by scraping the surface of the receptacle. As a result, the coffee preparation requires a lot of manual handling and is so very time consuming. Usually coffee freshness can also vary a lot and this can impact on the cup quality because coffee comes generally from bulk package or coffee is ground from beans in the receptacle itself.

Also, depending on the manual dosage of coffee and the brewing conditions (e.g., centrifugal speed, receptacle size) the cup quality can vary a lot.

Therefore, these systems have never reached an important commercial success.

In German patent application DE 102005007852, the machine comprises a removable holder into which an open cup-

K-FEE SYSTEM GMBH, EX2001, page 3
NESPRESSO USA, INC. v. K-FEE SYSTEM GMBH
IPR2024-00254, U.S. PATENT 11,465,829

shaped part of the receptacle is placed; the other part or lid being attached to a driving axis of the machine. However, a disadvantage is the intensive manual handling. Another disadvantage is the difficulty to control quality of the coffee due to a lack of control for the dosing of the powder and a lack of control of the freshness of the coffee powder.

Other devices for brewing coffee by centrifuge forces are described in WO 2006/112691; FR2624364; EP0367600; GB2253336; FR2686007; EP0749713; DE4240429; EP0651963; FR2726988; DE4439252; EP0367600; FR2132310; FR2513106; FR2487661; DE3529053; FR2535597; WO2007/041954; DE3529204; DE3719962; FR2685186; DE3241606 and US-A-4545296.

However, the effect of centrifugal forces to brew coffee or prepare other food substances presents many advantages compared to the normal brewing methods using pressure pumps. For example, in "espresso" coffee-type brewing methods, it is very difficult to master all the parameters which influence the quality of extraction of the delivered coffee extract. These parameters are typically the pressure, the flow rate which decreases with the pressure, the compaction of the coffee powder which also influences the flow characteristics and which depends on the coffee ground particle size, the temperature, the water flow distribution and so on.

Therefore, there is a need for proposing a new capsule system adapted therefore for which the extraction parameters can be better and more independently controlled for improving quality of the delivered food liquid.

There is also a need for providing a solution enabling to improve the extraction characteristics, i.e., total solid content (Tc), level of foam/crema, of the existing

systems, e.g., coffee preparation devices, using the principle of centrifugation.

At the same time, there is a need for a way of preparing a beverage which is more convenient compared to the prior art centrifugal coffee preparation device, in particular a solution which does not require the hassle of removing coffee waste from the centrifuging receptacle.

For this, the invention relates to a capsule insertable in a beverage production device for preparing a beverage from a substance contained in the capsule by introducing liquid in the capsule and passing liquid through the substance using centrifugal forces for producing the beverage which is centrifuged peripherally in the capsule relatively to a central axis of the capsule corresponding to an axis of rotation during the centrifuging operation comprising. The capsule comprises an enclosure containing a predetermined amount of beverage substance, a cup-like shaped body and an upper wall for closing the body. The capsule further comprises a flange-like rim extending outwardly from the body which comprises an annular raising portion forming a restriction for the centrifuged liquid flowpath when said portion is engaged by a pressing surface of the beverage production device.

The annular raising portion forms with the pressing surface of the beverage production device a restriction valve means for the flow of beverage. The raising portion is more particularly configured to selectively block the flow path of the centrifuged liquid in order to delay its release from the capsule. More particularly, when a sufficient pressure of the centrifuged liquid is reached at the valve means, i.e., the centrifuged liquid forcing against the raising portion, the valve means opens, i.e., a restricted flow gap is provided by the pressing surface

K-FEE SYSTEM GMBH, EX2001, page 5
NESPRESSO USA, INC. v. K-FEE SYSTEM GMBH
IPR2024-00254, U.S. PATENT 11,465,829

of the device moving away from the raising portion of the capsule or vice versa. Before the pressure of the centrifuged liquid is attained, the valve means remain closed. Hence, the raising portion blocks the flowpath for the centrifuged liquid. It should be noted that the opening of the valve means may be dependent on the rotational speed of the driving means which drive the capsule in rotation in the beverage production device. Therefore, as the valve means selectively block the flowpath for the centrifuged liquid, a preliminary wetting step of the beverage substance, e.g., ground coffee, can be carried out as no liquid is yet discharged from the device. As a result of a prewetting and delayed release of the beverage, a thorough wetting of the substance is made possible and the interaction time between the liquid and the beverage substance, e.g., coffee powder, substantially increases and the extraction characteristics, e.g., coffee solid content and beverage yield, can be significantly improved.

In a mode of the invention, the annular raising portion extends in a direction substantially perpendicular to the plane of the flange-like rim. The orientation of the raising portion is thus configured to selectively block the flow of the beverage that leaves the capsule along the flange-like rim.

In a particular mode, the annular raising portion is rigid. The rigidity is here evaluated in relation to its ability to resist compression by a pressing surface of the beverage production device applying a closure force thereto when the capsule is inserted in the beverage preparation device. In other words, the raising portion remains of a relatively constant dimension during the beverage preparation operations in the device in order

for the annular raising portion to play its role of restriction of the beverage flowpath and to ensure a reliable opening.

In a particular mode, the annular raising portion is made integral with the flange-like rim. Therefore, for essentially economical reasons, the annular raising portion can be formed in one piece together with the cup-like shaped body.

The flange-like rim can comprise an annular groove on its surface directly opposed to the annular raising portion. The annular groove can serve to receive a complementary shaped-indentation of the beverage production device, in particular, provided in the capsule holder. The advantage is to mechanically support and maintain the rigidity of the annular raising portion and prevent it from deforming under the load exerted by the pressing surface of the beverage production device. Consequently, the flange-like rim of the capsule can be maintained relatively thin. For instance, the rim may be of a thickness comprised between about 0.5 and 1.5 mm.

Advantageously, the annular raising portion is embossed in the flange-like rim. For example, the annular raising portion and groove are made in the same operation such as when the cup-like shaped body is formed by deep drawing or thermoforming.

The cup-like shaped body can also be produced by injection-moulding of thermoplastics with the raising portion being integrated in the injected design.

In another possible mode, the annular raising portion is a separate element which is attached to the flange-like rim. For instance, the portion may be sealed to the flange like rim such as by ultrasonic or heat sealing or

K-FEE SYSTEM GMBH, EX2001, page 7
NESPRESSO USA, INC. v. K-FEE SYSTEM GMBH
IPR2024-00254, U.S. PATENT 11,465,829

be clipped into an annular receiving seat or groove provided in the flange-like rim.

In this case, the annular raising portion can be made of rubber elastic material or soft plastic material.

The annular raising portion of the capsule can take an inverted V- or U- or W-like shape.

In the context of the invention, the cup-like shaped body can comprise aluminium and/or plastics. The cup-like shaped body can also be made of plastics only. The capsule further comprises a lid membrane for closing the cup-like shaped body. The capsule can be formed of gas barrier material and closed by the membrane in a gas impervious manner so that the freshness of the beverage substance, e.g., roast and ground coffee particles, is maintained for a prolonged period of time.

The membrane comprises at least a peripheral perforable area neighbouring a sealing portion of the membrane which is sealed onto the flange-like rim of the body. Hence, the perforable area can be perforated by perforating means of the beverage production device for providing a series of liquid outlets in the capsule. Therefore, liquid being centrifuged in the capsule can leave the capsule via the series of outlets, then, it can exert pressure onto the annular raising portion of the capsule. When the opening pressure is reached, the valve means open forming a flow restriction gap and the liquid can be centrifuged outside of the capsule and be collected for being dispensed.

In a possible alternative, the capsule of the invention comprises a porous lid instead of a perforable membrane. The porous lid may be formed of paper, plastic and/or aluminium. The cup-shaped body may also be formed of paper, cardboard or another biodegradable material.

In another possible mode, the capsule comprises an internal filter element inserted in the cup-shaped body. The capsule can be closed by a lid membrane covering the internal filter. The lid membrane can be perforable or peelable. For instance, the internal filter element can be a plastic piece with filtering holes or slots for filtering the centrifuged liquid such as described in co-pending european patent application No. 08102147.9.

The capsule of the invention can comprise a substance which is extractable, e.g., ground coffee or soluble, e.g., milk powder. In particular the substance can be chosen amongst ground coffee, instant coffee, chocolate, cocoa powder, leaf tea, instant tea, herbal tea, a creamer/whitener, a nutritional composition (e.g., infant formula), dehydrated fruit or plant, culinary powder and combinations thereof.

The capsule may include a gas with the food ingredients such as nitrogen and/or carbon dioxide.

Preferably, the capsule comprises gas barrier materials enveloping the ingredients' compartment. However, in case the capsule is not gastight 'per se', an outer package can be used to pack the capsule individually or in group of several capsules. In this case, the package is removed before the capsule is inserted in the device.

The invention also relates to a beverage preparation device from a capsule as aforementioned, by passing a liquid through the beverage substance in the capsule, comprising:

a liquid injection head for injecting liquid in the capsule,

a capsule holder for holding the capsule in the device,

means for driving the capsule in centrifugation,

wherein it comprises a pressing surface for applying a determined closing force onto the annular raising portion of the flange-like rim for substantially closing the flowpath to the beverage.

The closing force can be determined to maintain the closure between the annular raising portion and the pressure surface, i.e., the valve means, until a sufficient pressure of the centrifuged liquid is reached directly upstream of the said portion. Such pressure can be of, e.g., about 1.5-2 bar.

The pressing surface and/or the capsule holder is/are associated to spring-loading means for enabling the opening of a flow restriction gap for the centrifuged liquid by the pressing surface moving relatively away from the annular raising portion. It should be noted that the flow restriction gap can be opened between the pressing surface and the capsule by a relative movement between each other. This relative movement can be obtained by either the pressing surface moving away from the capsule or the capsule moving away from the pressing surface such as by the capsule holder being the mobile element. A third option is to have both the pressing surface of the injection head and the surface supporting the capsule holder to move against the force of a spring-biasing means.

In a particular mode, the pressing surface forms a relatively flat annular surface onto which the annular raising portion of the capsule can press. Hence, a closing action is promoted by an engagement at the valve means under the form of an annular sealing line. Preferably, the surface is substantially parallel to the flange-like rim of the capsule. Of course, the pressing

surface could also have a slightly concave or convex line of curvature in radial direction relative to the axis of centrifugation.

According to another feature of the device, the capsule holder can comprise a support surface for supporting the flange-like rim of the capsule and comprising an annular indentation indented to fit into an annular groove of the flange-like rim. As aforementioned, this configuration of the support surface of the capsule holder avoids the deformation of the capsule in the device when the injection head is engaged in compression against the flange-like rim of the capsule.

In another feature of the device, the injection head comprises a central injection needle. The needle is configured to perforate the lid membrane of the capsule. The needle may terminate by one or more liquid inlets for injecting liquid in the capsule. Preferably, the needle is centrally position, i.e., aligned with the axis of rotation.

The invention may also relates to a system including the combination of one or more capsules and a device as aforementioned.

Additional features of the invention will appear in the detailed description of the figures which follows:

Fig. 1 is a top perspective view of a sealed capsule of the system according to the invention;

Fig. 2 is a bottom view of the capsule of Fig. 1;

Fig. 3 is a cross sectional view of the capsule of figs 1 and 2;

Fig. 4 is a perspective view of the beverage production device of the invention;

Fig. 5 is a cross sectional view of a beverage production device with a capsule inside;

K-FEE SYSTEM GMBH, EX2001, page 11
NESPRESSO USA, INC. v. K-FEE SYSTEM GMBH
IPR2024-00254, U.S. PATENT 11,465,829

Fig. 6 is a detailed cross sectional view of the view of Fig. 5 in a closed configuration of the valve means;

Fig. 7 is an enlarged cross sectional view of the view of Fig. 6 in a closed configuration of the valve means;

Fig. 8 is an enlarged cross sectional view of the view of Fig. 6 in an open configuration of the valve means;

Fig. 9 is bottom perspective view of the cover part of the device showing a detail.

As shown in figures 1 and 2, a preferred single-use capsule 1 of the invention generally comprises a dished body 2 onto which is sealed a perforable membrane 3. The membrane 3 is sealed onto a peripheral rim 4 of the body at an annular sealing portion 5. The rim 4 can extend outwards forming an annular sealing small portion of between about 2-10 mm. The dished body comprises a bottom wall 6 and a side wall 7 which preferably widens in direction of the large open end of the body opposed to the bottom wall. The dished body is preferably rigid or semi-rigid. It can be formed of a food grade plastic, e.g., polypropylene, with a gas barrier layer such as EVOH and the like or aluminium alloy or a laminate of plastic and aluminium alloy. The membrane 3 can be made of a thinner material such as a plastic film also including a barrier layer or aluminium alloy or a combination of plastic and aluminium alloy. The membrane is usually of a thickness between 20 and 250 microns, for example. The membrane is perforated for creating the water inlet as will be described later in the description. The membrane also further comprises a perforable peripheral area.

K-FEE SYSTEM GMBH, EX2001, page 12
NESPRESSO USA, INC. v. K-FEE SYSTEM GMBH
IPR2024-00254, U.S. PATENT 11,465,829

Preferably, the capsule forms a symmetry of revolution around a central axis A. However, it should be noted that the capsule may not necessarily have a circular section around axis A but may take another form such as a square, a rectangle, or another polygonal form.

According to an aspect of the invention, the capsule of the invention comprises an annular raising portion 8 extending upwardly from the flange-like rim. The portion 8 forms part of a valve means for selectively blocking the flow of the centrifuged liquid coming out of the capsule as will be explained later in the present description.

A first embodiment of a system including a capsule of the invention and a beverage preparation device is illustrated in figures 4 to 8 and is described now.

The system comprises a capsule 1 as aforementioned and a beverage preparation device 23. The device has a module 24 which a capsule can be inserted in. The capsule contains a food substance for being brewed and the capsule is removed from the module after use for being discarded (e.g., for waste or recycling of the organic and inorganic raw materials). The module 24 is in fluid communication with a water supply such as a water reservoir 25. A fluid transport means such as a pump 26 is provided in the fluid circuit 27 between the module and the water supply. A water heater 28 is further provided to heat water in the fluid circuit before water enters the module. The water heater can be inserted in the fluid circuit to heat fresh water coming from the reservoir. Alternatively, the water heater can be placed in the water reservoir itself that becomes a water boiler in such case. Of course, water can also be taken directly from a domestic water supply via a water plug connection. The device may further comprise control means and

K-FEE SYSTEM GMBH, EX2001, page 13
NESPRESSO USA, INC. v. K-FEE SYSTEM GMBH
IPR2024-00254, U.S. PATENT 11,465,829

activation means for activating the beverage preparation method (not illustrated).
Water can be fed in the module 24 at low pressure or even at gravity pressure. For example, a pressure of between 0 and 2 bar above atmospheric pressure can be envisaged at the water inlet of the module. Water at higher pressure than 2 bar could also be delivered if a pressure pump is utilized such as a piston pump.
The brewing module 24 can comprise two main capsule encasing sub-assemblies 29, 30; mainly comprising a water injection sub-assembly or water injection head and a liquid receiving subassembly including a capsule holder. The two subassemblies form positioning and centring means for referencing the capsule in rotation in the device. The two subassemblies' closes together to encase a capsule therein for example by a bayonet-type connection system 31 or any other suitable closure means such as a mechanism based on a jaw-type closure principle. The liquid receiving subassembly 30 comprises a liquid duct 32, for example, protruding on a side of the subassembly for guiding the centrifuged liquid coming out of the capsule to a service receptacle such as a cup or glass. The liquid duct is in communication with a liquid receiver 33 forming a U-like or V-like shaped annular section surrounding a capsule holder comprising a rotating drum 34 into which the capsule can be inserted as illustrated in figure 5. The liquid receiver 33 defines a collecting cavity 63 for collecting the liquid as will be explained later in the description. Below the liquid receiving subassembly 30, are placed means for driving the capsule receiving drum 34 in rotation inside the subassembly.
The driving means preferably comprise a rotary motor 40 which can be supplied by electricity or gas power.

K-FEE SYSTEM GMBH, EX2001, page 14
NESPRESSO USA, INC. v. K-FEE SYSTEM GMBH
IPR2024-00254, U.S. PATENT 11,465,829

The water injection subassembly comprises a water inlet side comprising a water inlet 35 communicating upstream with the water fluid circuit 27.
The rotary drum 34 prolongs itself axially by a rotating shaft 37 which is maintained in rotational relationship relative to an outer base 38 of the liquid receiver 33 by a rotational guiding means 39 like a ball bearing or needle bearing. Therefore, the rotary drum is designed to rotate around a median axis I whereas the outer base 38 of the receiver is fixed relative to the device. A mechanical coupling can be placed at the interface between the rotating shaft 37 of the drum and the shaft 42 of the motor 40.
Considering the water injection subassembly 29, it comprises a centrally arranged water injector 45 which is fixed relative to longitudinal axis I of the device. The water injector comprises a central tubular member 46 for transporting water from the inlet 35 to a water outlet 47 that is intended to protrude inside the enclosure 14 of the capsule. The central tubular member extends by a hollow needle 90 for intruding in the capsule and injecting liquid therein. For this, the water outlet is associated by a puncturing means such as a sharp tubular tip 48 that is able to create a punctured hole through the membrane lid 3 of the capsule.
About the water injector is mounted a rotary engaging part or cover part 49. The engaging part 49 has a central bore for receiving the water injector and rotational guiding means such as a ball or needle bearing 50 inserted between the part 49 and the injector 45. A sealing means 89 is positioned between the ball bearing 50 and the injection needle 90 for preventing ingress of liquid from the capsule inside the bearing.

The capsule engaging subassembly 29 may further comprise a tubular portion of skirt 62 which protrudes in the internal annular chamber 63 of the liquid receiving subassembly 30 when the two subassemblies are closed relatively one another about a capsule. This tubular portion of skirt 62 forms an impact wall for the centrifuged liquid which exits the centrifuged capsule. This portion 62 is preferably fixed on the subassembly 29. The subassembly further comprises a handling portion 64 for facilitating the connection on the liquid receiving subassembly 30. This handling portion 64 can have a knurled peripheral surface for handling. The handling portion can be fixed on the fixed base of the subassembly 29 by screws 67.

This portion could of course be replaced by a lever mechanism or a similar handling means.

According to an aspect of the invention, the rotary engaging part comprises perforating members 53 located at the periphery of the part. The perforating members are placed for perforating the membrane 3 of the capsule at its periphery, more particularly, in the annular peripheral area of the top membrane 3 of the capsule. More particularly, the perforating members are formed of sharp projections protruding from the lower surface of the engaging part. The membrane is preferably perforated when the water injection subassembly 29 is moved relative to the capsule, when the capsule is in place in the capsule holder of the lower subassembly 30, during closure of the device, i.e., of the two sub-assemblies 29, 30, about the capsule.

The perforating elements are preferably distributed along a circular path of the part.

K-FEE SYSTEM GMBH, EX2001, page 16
NESPRESSO USA, INC. v. K-FEE SYSTEM GMBH
IPR2024-00254, U.S. PATENT 11,465,829

In a preferred mode, the perforating members 53 are solid (i.e., not traversed by a liquid supply conduit) at the tip.

A valve means 51 is provided in the system in the flow path of the centrifuged liquid downstream of the perforating elements. The valve means can be any suitable valve providing opening or enlargement of the flow path of the centrifuged liquid leaving the capsule when a given threshold of pressure is attained. The valve means is so calibrated to open at a given pressure. For instance, the opening pressure is of about 1.5 to 4 bar, preferably of about 2 bar, of pressure.

In the preferred mode, as illustrated, the valve means comprises a portion of engagement, i.e., a raising portion 8 of the capsule, which projects from the flange-like rim 4 of the capsule. This portion of engagement forms a projection extending upwards from the substantially flat surface of the rim. The portion 8 can be formed integrally from the flange-like rim. In such case, the body 2 of the capsule including the flange-like rim is preferably made of plastics and/or aluminium. On the opposed side, the valve means comprises an engaging surface 83 of the rotary cover part 49. The engaging surface 83 may comprise various shapes depending on the particular shape of the projection 8. In a preferred mode, the engaging surface 83 is a substantially planar surface such as an annular flat surface. The engaging surface may be formed as an annular recessed portion of surface at the periphery of the lower surface 54 of the cover part 49 thereby allowing the base of perforating members to be lower than the base of the projection 8.

It should be noted that the engaging surface 83 may take many different shapes other than flat such as concave or convex.

K-FEE SYSTEM GMBH, EX2001, page 17
NESPRESSO USA, INC. v. K-FEE SYSTEM GMBH
IPR2024-00254, U.S. PATENT 11,465,829

As illustrated in Fig. 8, the flange-like rim of the capsule can comprise an annular groove 81 on its surface 82 opposed to the projection 8. The capsule holder of the device comprises a support portion comprising a support surface from which extends an annular indentation 92 which matches the shape of the annular groove 81 of the capsule. Hence, the indentation 92 can serve to position and reference the capsule in the device as well as to support the annular projection 8 of the valve means when being compressed by the rotary part 49. For instance, the projection and its counter-shape 81 can be formed during the forming of the body of the capsule such as by a manufacturing operation of deep drawing or thermoforming. The valve means 51 is designed to close under the force of a resilient closure load obtained by a load generating system 70 comprising a spring-biasing element 71. The spring-biasing element 71 applies a resilient load onto the rotary cover plate 49. The load primarily distributes itself onto the engaging surface 83 acting in closure against the raising portion 8 of the capsule. Therefore, the valve normally closes off the flow path for the centrifuged liquid until a sufficient pressure is exerted on the protrusion by the centrifuged liquid exiting through the orifices created by the perforating elements. The liquid flows thus between the membrane 3 and the upper surface 54 of the rotary cover part 49 and forces the valve 51 to open by pushing the whole cover part 49 upwards against the force of the spring-biasing element 71, as illustrated in Fig. 8. The centrifuged liquid can thus be ejected at a high velocity on the impact surface 62.

The load generating system 70 can be made adjustable as illustrated in Figs. 5 or 6, for controlling the opening pressure of the valve means. In particular, the system 70

can comprises a base 55 into which is fitted a first end of the spring-biasing element 71. At the opposed end of the spring-biasing element 71 is fixed, an abutting member 56 further connected to a screw element 57. The base 55, element 71 and abutting member 56 are housed into a tubular frame 58. The screw element 57 and tubular frame 58 form together an actuating means 72 comprising a complementary thread 73 enabling to tune the compressive load of the spring-biasing element 71 on the engaging part 49.

It should be noticed that the elastic means for exerting the load on the valve means can be designed differently. For instance, the elastic means 71, e.g., a spring or rubber-elastic element, can be directly associated to a ring-shaped protrusion 8 of the valve means.

As illustrated in Figs 8 and 9, the lower surface 54 of the cover part 49 comprises a series of perforating elements or projections 53 being distributed in a circular pattern in a peripheral region of the surface. Each perforating element 53 will produce a perforation in the upper membrane of the capsule and therefore a passage for the centrifuged liquid for leaving the capsule engaged in rotation. The number of perforating elements can be changed by removing the cover plate and replacing it by a plate having a higher number of perforating elements. Preferably, the surface can comprise channelling means 84 formed by a series of channels 85 provided in the surface 54 in order to ensure that a controlled flow gap remains between the membrane and the cover part between the perforating elements and the valve means. The channels 85 can be formed by relief elements 86, 87 forming distancing means. For instance, a series of relief elements 87 can be provided between the perforating elements 53 to ensure that the membrane does

K-FEE SYSTEM GMBH, EX2001, page 19
NESPRESSO USA, INC. v. K-FEE SYSTEM GMBH
IPR2024-00254, U.S. PATENT 11,465,829

not collapse between the perforating elements which would so cause the blockage of the liquid flow. Furthermore, another series of relief elements 86 can be placed in the flow path between the perforating elements 53 and the valve means to further ensure the presence of channels between the surface 54 and the flange-like rim 4 of the capsule so that the flow of liquid is properly channelled towards the valve means. It should be noticed that the distancing means, e.g., a series of discrete relief elements 86, 87, for maintaining a flow gap could be formed onto the flange-like rim of the capsule. For instance, the flange like-rim can comprise a series of small concentrically-arranged projections distributed inwardly relative to the ring-shaped projection 8 (not illustrated).

In another mode of the invention, the annular projection 8 on the surface of the capsule is formed by an element which is made of a material which is different from the material of the flange-like rim of the capsule. The element can be made of a resilient or non-resilient material. In particular, the element can be made of plastic or can be a rubber O-ring which is sealed onto the flange-like rim. The ring can, for instance, be sealed by heating or ultrasounds or deposited as a liquid, e.g., liquid silicone rubber (LSR), and allowed to harden onto the rim. The projecting element 8 may also be associated by other means to the capsule such as by an adhesive or by clipping into an annular groove of the capsule.

K-FEE SYSTEM GMBH, EX2001, page 20
NESPRESSO USA, INC. v. K-FEE SYSTEM GMBH
IPR2024-00254, U.S. PATENT 11,465,829

CLAIMS:

1. Capsule insertable in a beverage production device for preparing a beverage from a substance contained in the capsule by introducing liquid in the capsule and passing liquid through the substance using centrifugal forces for producing the beverage which is centrifuged peripherally in the capsule relatively to a central axis of the capsule corresponding to an axis of rotation during the centrifuging operation comprising:

an enclosure containing a predetermined amount of beverage substance,

a cup-like shaped body,

an upper wall for closing the body,

wherein it comprises a flange-like rim extending outwardly from the body which comprises an annular raising portion forming a restriction for the centrifuged liquid flowpath when said portion is engaged by a pressing surface of the beverage production device.

2. Capsule according to claim 1, wherein the annular raising portion extends in a direction substantially perpendicular to the plane of the flange-like rim.

3. Capsule according to claims 1 or 2, wherein the annular raising portion is rigid.

4. Capsule according to any of claims 1 to 3, wherein the annular raising portion is made integral with the flange-like rim.

5. Capsule according to claim 4, wherein the flange-like rim comprises an annular groove on its surface directly opposed to the annular raising portion.

6. Capsule according to claim 5, wherein the annular raising portion is embossed in the flange-like rim.

7. Capsule according to claims 5 or 6, wherein the cup-like shaped body comprises aluminium.

8. Capsule according to claims 1 to 4, wherein the cup-like shaped body is made of plastics.

9. Capsule according to claims 1 or 2, wherein the annular raising portion is a separate element which is attached to the flange-like rim.

10. Capsule according to claim 9, wherein the annular raising portion is made of rubber elastic material.

11. Beverage preparation device from a capsule according to any of the preceding claims, by passing a liquid through the beverage substance in the capsule, comprising:

a liquid injection head for injecting liquid in the capsule,

a capsule holder for holding the capsule in the device,

means for driving the capsule in centrifugation,

wherein it comprises a pressing surface for applying a determined closing force onto the annular raising portion of the flange-like rim for substantially closing the flowpath to the beverage.

12. Device according to claim 11, wherein the pressing surface and/or the capsule holder is/are associated to spring-loading means for enabling the opening of a restriction flowpath for the centrifuged liquid by the pressing surface moving relatively away from the annular raising portion.

13. Device according to claims 11 or 12, wherein the pressing surface forms a relatively flat annular surface.

14. Device according to any of claims 11 to 13, wherein the capsule holder comprises a support surface for supporting the flange-like rim of the capsule and comprising an annular indentation indented to fit into an annular groove of the flange-like rim.

15. Device according to any of claims 11 to 14, wherein the injection head comprises a central injection needle.

Abstract:

Capsule insertable in a beverage production device for preparing a beverage from a substance contained in the capsule by introducing liquid in the capsule and passing liquid through the substance using centrifugal forces for producing the beverage which is centrifuged peripherally in the capsule relatively to a central axis of the capsule corresponding to an axis of rotation during the centrifuging operation comprising:

an enclosure containing a predetermined amount of beverage substance,

a cup-like shaped body,

an upper wall for closing the body,

wherein it comprises a flange-like rim extending outwardly from the body which comprises an annular raising portion forming a restriction for the centrifuged liquid flowpath when said portion is engaged by a pressing surface of the beverage production device.^

Fig. 7

K-FEE SYSTEM GMBH, EX2001, page 24
NESPRESSO USA, INC. v. K-FEE SYSTEM GMBH
IPR2024-00254, U.S. PATENT 11,465,829

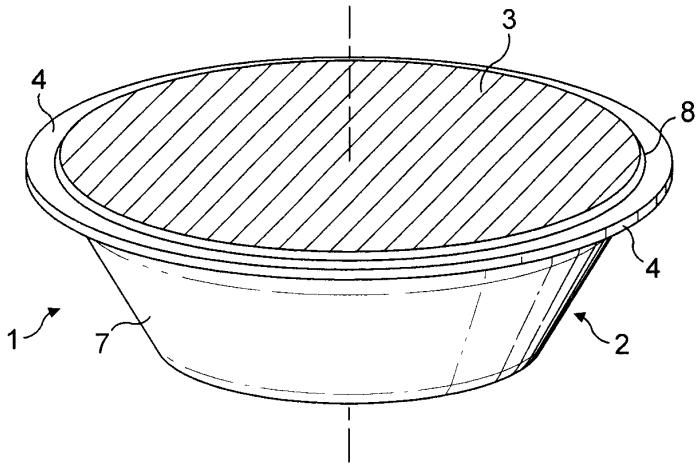

FIG. 1

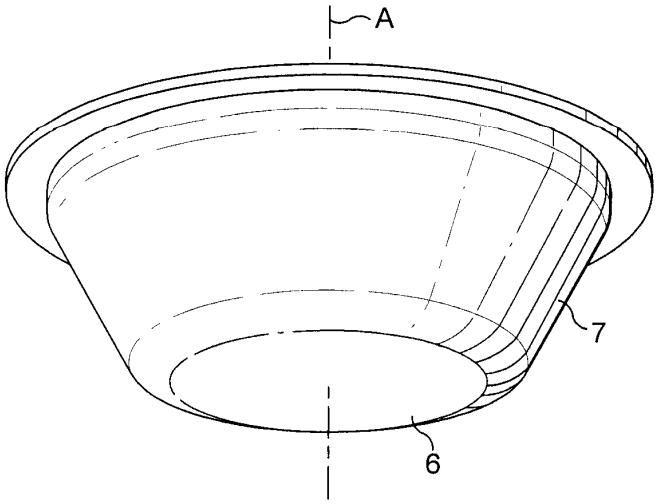

FIG. 2

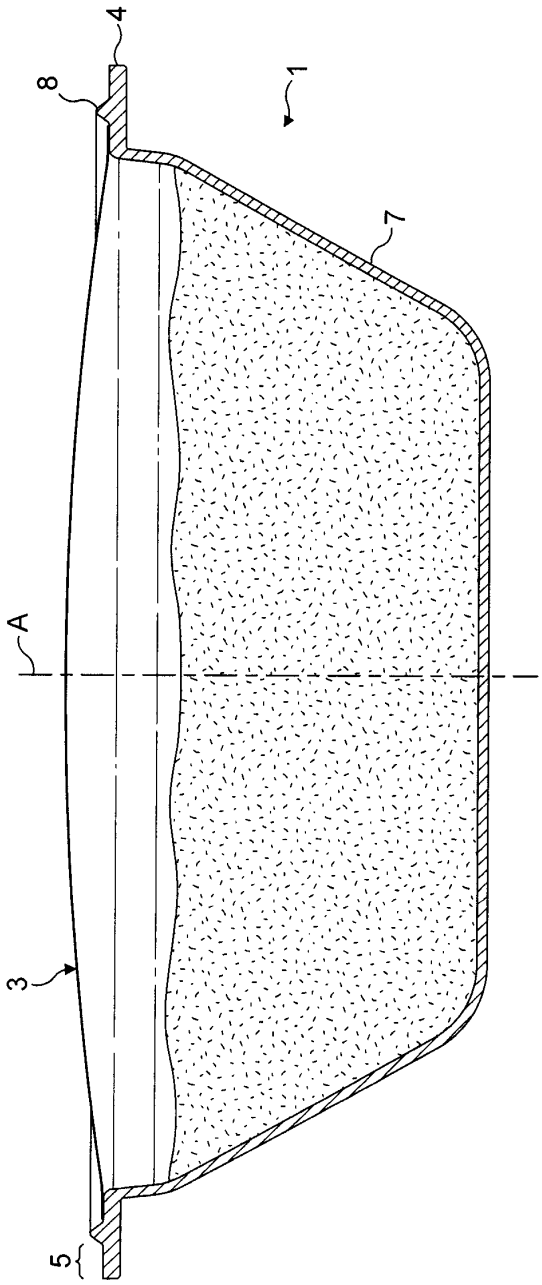

FIG. 3

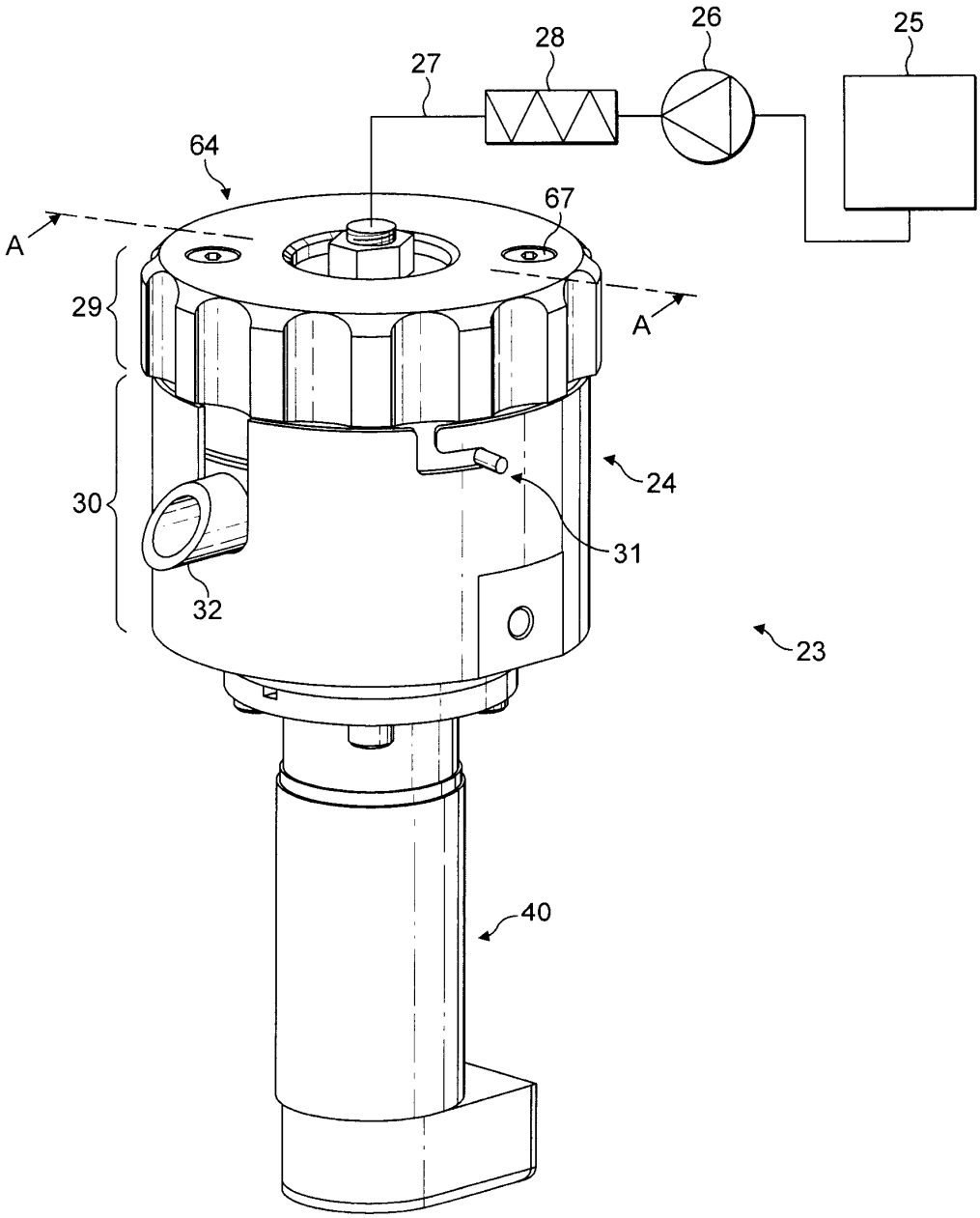

FIG. 4

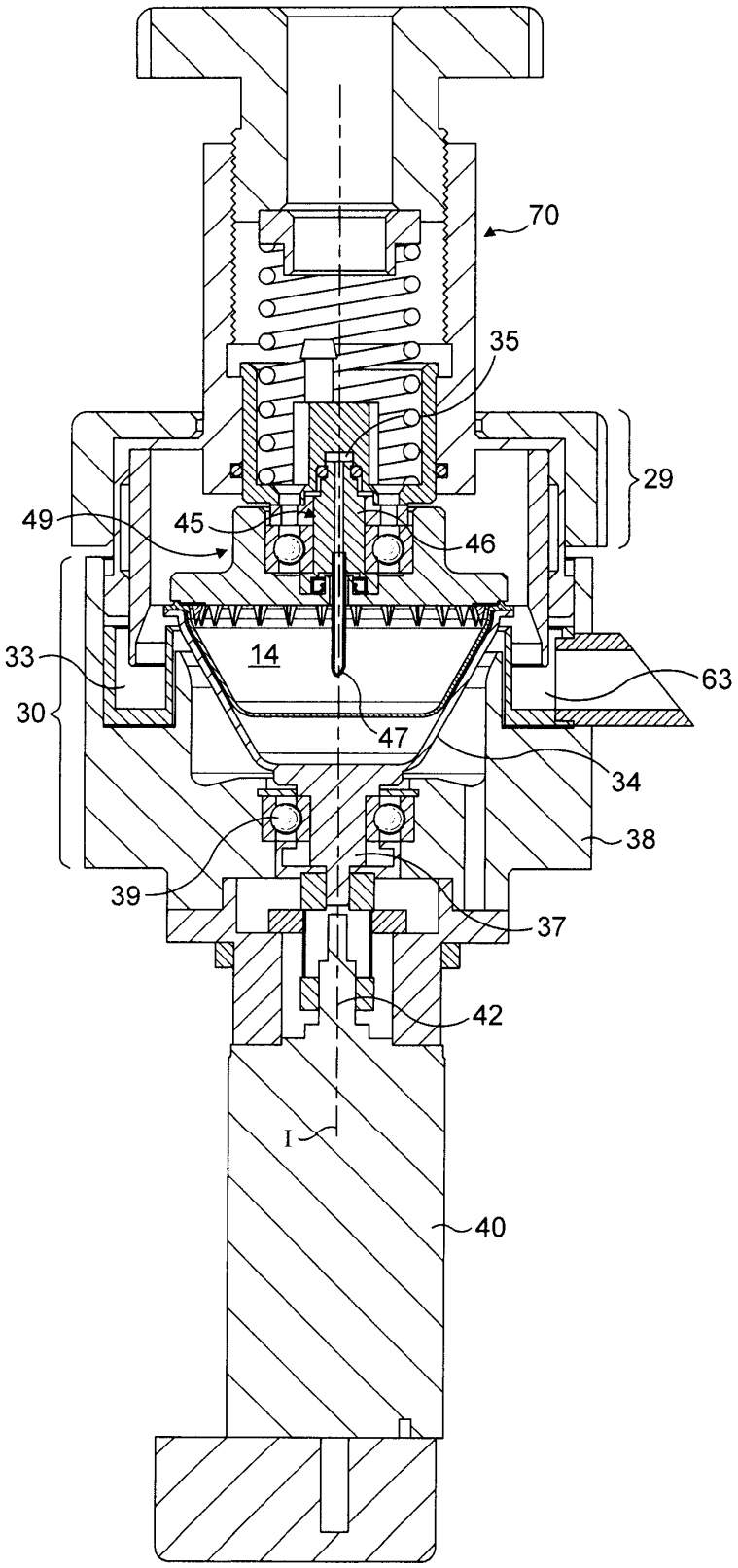

FIG. 5

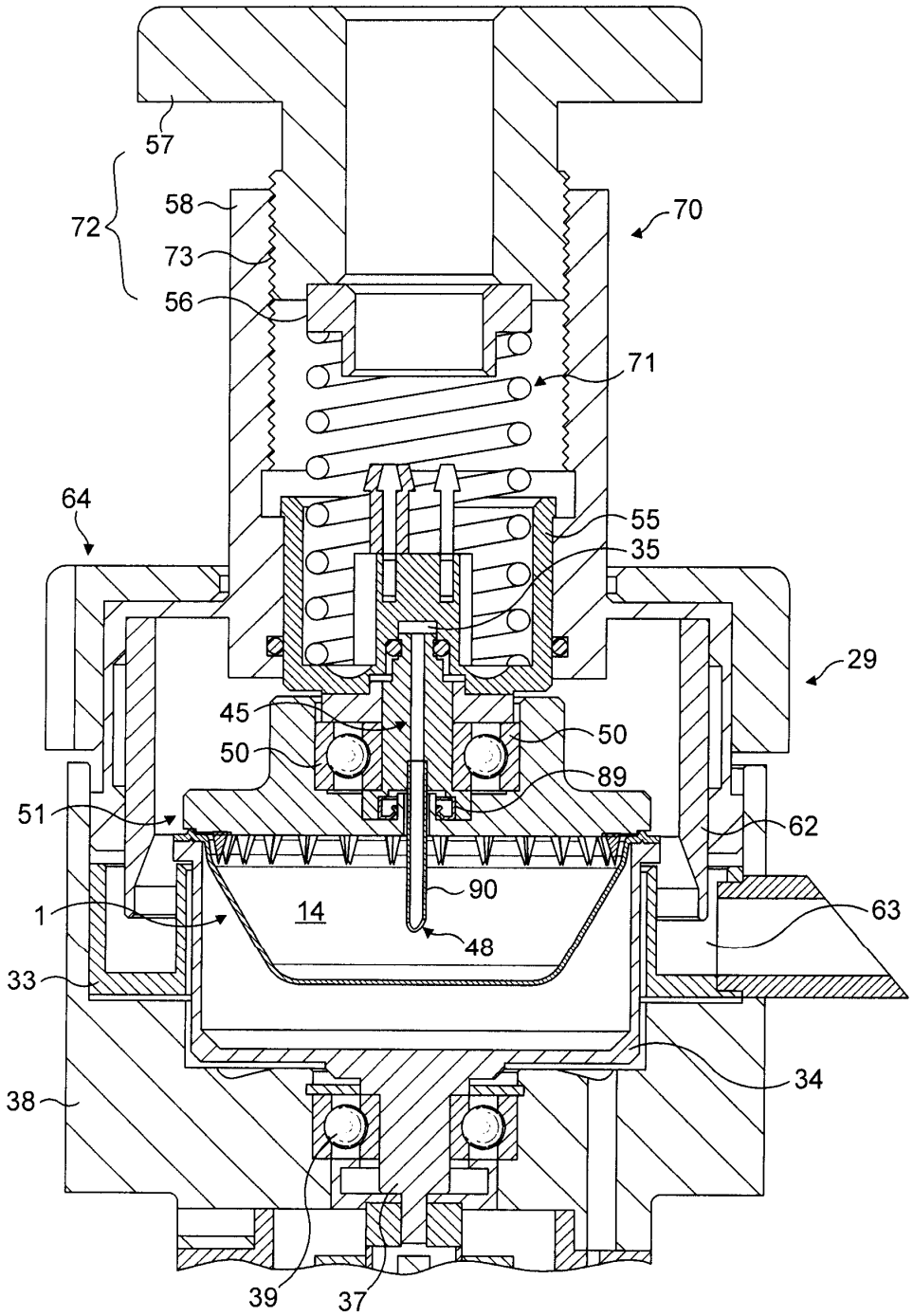
57
72
58
73
56
70
71
64
55
35
29
45
50
50
89
51
62
90
1
14
63
48
33
34
38
39
37

FIG. 6

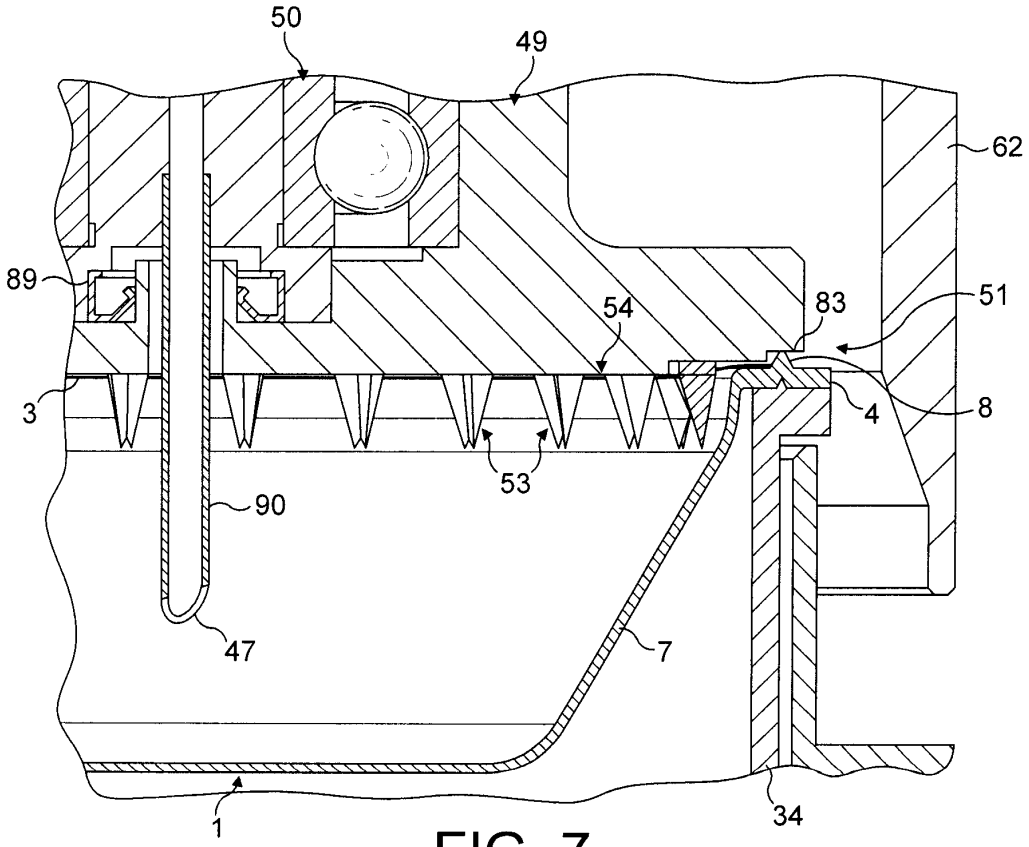

FIG. 7

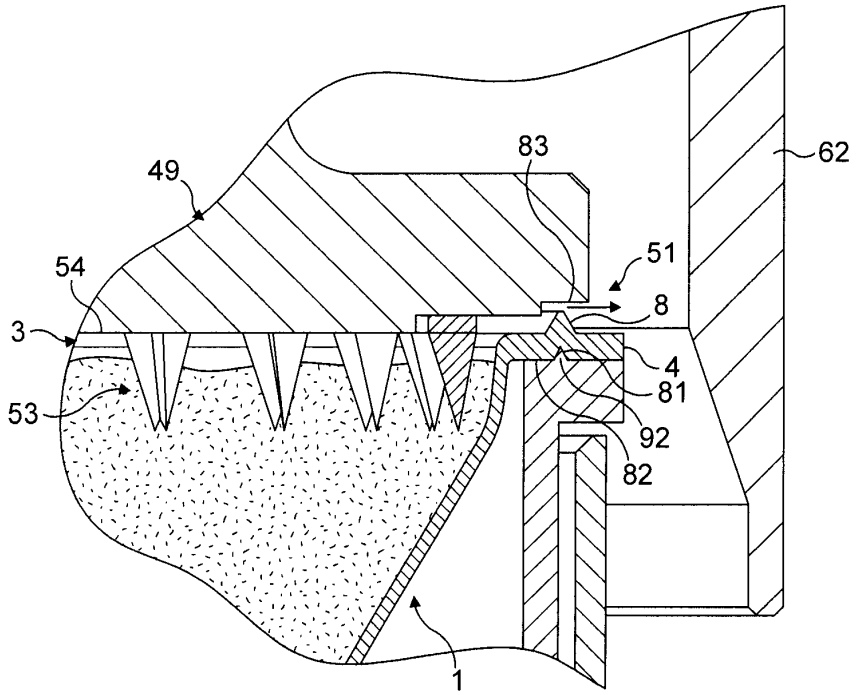

FIG. 8

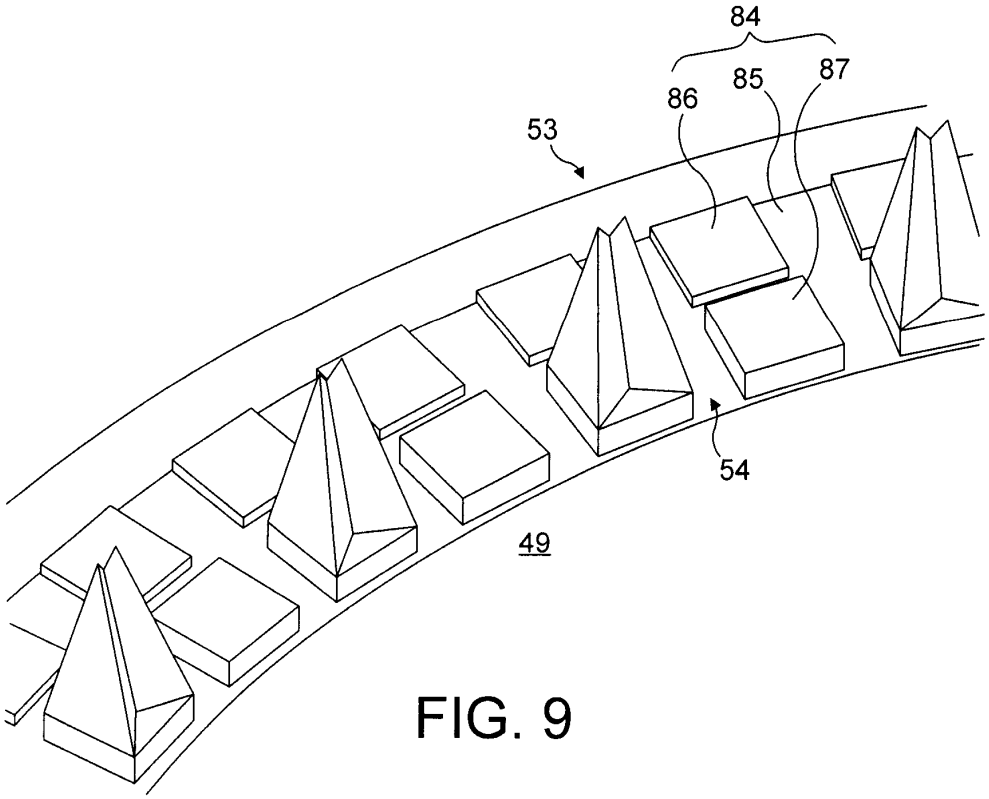

FIG. 9