US010800600B2

(12) **United States Patent**
Jarisch et al.

(10) **Patent No.: US 10,800,600 B2**
(45) **Date of Patent: Oct. 13, 2020**

(54) **CAPSULE, SYSTEM AND METHOD FOR PREPARING A BEVERAGE BY CENTRIFUGATION**

(75) Inventors: **Christian Jarisch**, Lutry (CH); **Alexandre Perentes**, Lausanne (CH); **Stefan Kaeser**, Aarau (CH); **Carlo Magri**, Monthey (CH); **Arnaud Gerbaulet**, Oye et Pallet (FR); **Thomas Kaeser**, Brent (CH); **Daniel Abegglen**, Rances (CH)

(73) Assignee: **Societe des Produits Nestle S.A.**, Vevey (CH)

(*) Notice: Subject to any disclaimer, the term of this patent is extended or adjusted under 35 U.S.C. 154(b) by 1233 days.

(21) Appl. No.: **13/697,297**

(22) PCT Filed: **May 12, 2011**

(86) PCT No.: **PCT/EP2011/057657**

§ 371 (c)(1),
(2), (4) Date: **Nov. 9, 2012**

(87) PCT Pub. No.: **WO2011/141532**

PCT Pub. Date: **Nov. 17, 2011**

(65) **Prior Publication Data**

US 2013/0064937 A1 Mar. 14, 2013

(30) **Foreign Application Priority Data**

May 12, 2010 (EP) 10162741
Jul. 13, 2010 (EP) 10169374

(51) **Int. Cl.**
B65D 85/804 (2006.01)
A47J 31/22 (2006.01)
(Continued)

(52) **U.S. Cl.**
CPC ***B65D 85/8043*** (2013.01); ***A23L 2/38*** (2013.01); ***A47J 31/22*** (2013.01); ***A47J 31/4492*** (2013.01);
(Continued)

(58) **Field of Classification Search**
CPC ... A47J 31/4492; A47J 31/22; B65D 85/8043; B65D 25/205; B65D 2203/06;
(Continued)

(56) **References Cited**

U.S. PATENT DOCUMENTS

2,451,195 A 10/1948 Brown
2,603,927 A 7/1952 Grey
(Continued)

FOREIGN PATENT DOCUMENTS

AU 2005200116 7/2005
AU 2002310977 1/2007
(Continued)

OTHER PUBLICATIONS

Oxford English Dictionary, definition of Foil, [on line] retrieved Jul. 30, 2019. Retrieved from the Internet: URL:<https://www.oed.com/view/Entry/72433>.*
(Continued)

Primary Examiner — Viren A Thakur
Assistant Examiner — Chaim A Smith
(74) *Attorney, Agent, or Firm* — K&L Gates LLP

(57) **ABSTRACT**

Capsule for the preparation of a beverage comprising a container and a beverage ingredient contained therein, wherein the container comprises a code (**65**) adapted for being identified or read by external reading means (**62**), wherein the code is arranged on the container to be read while the capsule is rotated around an axis of rotation traversing the capsule.

21 Claims, 4 Drawing Sheets

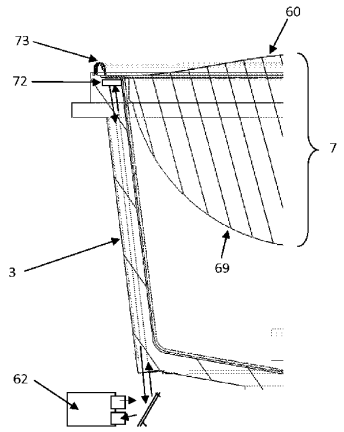

(51) **Int. Cl.**

A47J 31/44	(2006.01)
A23L 2/38	(2006.01)
G06K 19/00	(2006.01)
B65D 25/20	(2006.01)
G06K 19/06	(2006.01)

(52) **U.S. Cl.**
CPC ***B65D 25/205*** (2013.01); ***G06K 19/00*** (2013.01); ***G06K 19/0614*** (2013.01); ***G06K 19/06018*** (2013.01); *B65D 2203/06* (2013.01); *Y02W 90/13* (2015.05)

(58) **Field of Classification Search**
CPC A23L 2/38; G06K 19/00; G06K 19/06018; G06K 19/0614
USPC 426/77–79; 99/295
See application file for complete search history.

(56) **References Cited**

U.S. PATENT DOCUMENTS

3,501,896	A	3/1970	Von Stoeser et al.	
4,136,202	A	1/1979	Favre	
5,004,913	A	4/1991	Kleinerman	
5,094,153	A	3/1992	Helbling	
5,103,081	A	4/1992	Fisher	
5,243,164	A	9/1993	Erickson et al.	
5,260,556	A	11/1993	Lake et al.	
5,273,392	A	12/1993	Bernad, II et al.	
5,285,041	A	2/1994	Wright	
5,392,102	A	2/1995	Toyoizumi et al.	
5,520,278	A	5/1996	Hughes	
5,974,950	A	11/1999	King	
6,081,326	A	6/2000	Rousseau et al.	
6,117,471	A	9/2000	King	
6,155,322	A	12/2000	Landan et al.	
6,253,820	B1	7/2001	Landan et al.	
6,527,181	B1	3/2003	Kleeberg et al.	
6,655,260	B2	12/2003	Lazaris et al.	
6,698,333	B2 *	3/2004	Halliday	B65D 85/8043 426/77
6,802,454	B1	10/2004	McMurty et al.	
6,820,535	B2	11/2004	Fischer	
6,985,119	B2	1/2006	Forster et al.	
7,097,074	B2 *	8/2006	Halliday	A47J 31/0673 222/325
7,258,061	B2	8/2007	Campbell et al.	
7,335,387	B2 *	2/2008	Hayes	A47J 31/002 426/112
7,461,584	B2	12/2008	Blanc et al.	
7,607,385	B2	10/2009	Halliday et al.	
7,614,524	B2	11/2009	Girad et al.	
7,673,558	B2	3/2010	Panesar et al.	
2002/0020659	A1	2/2002	Sweeney et al.	
2002/0048621	A1	4/2002	Boyd et al.	
2002/0048631	A1	4/2002	Boyd et al.	
2002/0148356	A1	10/2002	Lazaris et al.	
2003/0001016	A1	1/2003	Fraier	
2004/0005384	A1	1/2004	Cai	
2004/0089158	A1 *	5/2004	Mahlich	A47J 31/3623 99/275
2004/0129145	A1	9/2004	Halliday et al.	
2004/0191372	A1	9/2004	Halliday et al.	
2005/0022674	A1	2/2005	Campbell et al.	
2005/0029287	A1	2/2005	Mobbs	
2005/0150391	A1	6/2005	Schifferle	
2005/0249052	A1	11/2005	Benedetti et al.	
2006/0239742	A1	10/2006	Bateman et al.	
2007/0203587	A1 *	8/2007	Erlandsson	A47J 31/3676 700/11
2007/0209524	A1	9/2007	Kim	
2007/0245901	A1	10/2007	Blanc et al.	
2008/0068178	A1	3/2008	Meyer	
2008/0081089	A1	4/2008	Blanc	
2008/0105130	A1	5/2008	Koeling et al.	
2008/0148948	A1 *	6/2008	Evers	A47J 31/407 99/275
2008/0302251	A1	12/2008	Rijskamp et al.	
2008/0309495	A1	12/2008	Chrisholm	
2009/0205747	A1	8/2009	Lillard, Jr.	
2009/0324791	A1	12/2009	Ohresser et al.	
2010/0000960	A1	1/2010	Anderson	
2010/0071562	A1	3/2010	Brezovnik et al.	
2010/0078480	A1	4/2010	Aker	
2011/0315711	A1	12/2011	Hecht et al.	
2013/0064937	A1	3/2013	Jarisch et al.	
2013/0098940	A1	4/2013	Bem et al.	
2014/0134299	A1	5/2014	Guidorzi et al.	
2016/0280454	A1	9/2016	Mills et al.	

FOREIGN PATENT DOCUMENTS

CA	2625310		9/2008
CN	2938096		8/2007
DE	3432339		3/1986
DE	8612623		8/1986
DE	04421910		1/1996
DE	4421910		1/1996
DE	19910226		9/2000
EP	0339807		11/1989
EP	0455337		3/1991
EP	0449533		10/1991
EP	0455337		11/1991
EP	569230	B1	11/1993
EP	0455337	A1	6/1994
EP	0638486		10/1996
EP	0638486	B1	10/1996
EP	0868295		7/1999
EP	0765821		2/2000
EP	1344722	A1	9/2003
EP	1593329		5/2004
EP	1440638		7/2004
EP	1586534		10/2005
EP	1440644		4/2006
EP	1 764 015	A1	3/2007
EP	1764015		3/2007
EP	1722398	A1	4/2007
EP	1772398		4/2007
EP	1849718		4/2007
EP	1849718		10/2007
EP	1849718	A1	10/2007
EP	1772398		11/2007
EP	1867261		12/2007
EP	1890271		2/2008
EP	2128802		5/2008
EP	1950150		3/2010
EP	1944264		4/2010
EP	1637457		9/2011
EP	1781151		1/2012
EP	2012994	B1	7/2012
EP	2498900		9/2012
EP	2341804		10/2012
EP	2427066		11/2012
EP	25225691		11/2012
EP	2384133		3/2013
EP	2572609		3/2013
EP	2525691		4/2014
EP	2470430		7/2014
EP	2512956		11/2014
EP	2528485		7/2015
EP	2493357		9/2015
EP	2957525	A1	12/2015
EP	2349176		3/2016
EP	2299851		8/2018
ES	2262096		11/2006
FR	2912124		8/2008
GB	2022050		12/1979
GB	2259078		3/1993
GB	2399404		9/2004
GB	2451508		2/2009
JP	6248878		10/1987
JP	6423936		1/1989
JP	233688		9/1989
JP	02180073		8/1990

(56) **References Cited**

FOREIGN PATENT DOCUMENTS

JP	03297728		12/1991
JP	H0540112		5/1993
JP	07125750		5/1995
JP	2756921		3/1996
JP	0977125		3/1997
JP	11120445		4/1999
JP	2000079046		3/2000
JP	2000094838		4/2000
JP	2001203232		7/2001
JP	2001250161		9/2001
JP	2001328663		11/2001
JP	2002360493		12/2002
JP	2003235733		8/2003
JP	2004276964		10/2004
JP	4459542		8/2006
JP	2007079318		3/2007
JP	2007257439		10/2007
JP	2010516364		11/2015
KR	1998040090		8/1998
NL	9302219		7/1995
WO	8804262		6/1988
WO	1988004262		6/1988
WO	0160712		8/2001
WO	0199047		12/2001
WO	WO 0199047	A1	12/2001
WO	0228241		4/2002
WO	WO 02/28241	A1	4/2002
WO	WO 0228241	A1	4/2002
WO	0228241		11/2002
WO	03039309		5/2003
WO	2004065258		5/2004
WO	2004065258		8/2004
WO	2005044067		5/2005
WO	WO 2005044067	A1	5/2005
WO	WO 2005047111	A1	5/2005
WO	2005063091		7/2005
WO	2005079638		9/2005
WO	2007087890		8/2007
WO	2007122144		11/2007
WO	2011141532		11/2007
WO	2008004194		1/2008
WO	2008111969		9/2008
WO	2008125256		10/2008
WO	2008134910		11/2008
WO	2008148601		12/2008
WO	WO 2008/148601	*	12/2008
WO	2010099806		3/2009
WO	WO 2009112291	A1	9/2009
WO	2159167		3/2010
WO	2010026053		3/2010
WO	20010026053		3/2010
WO	WO 2010/026053	A1	3/2010
WO	WO 2010026053	A1	3/2010
WO	2010034662		4/2010
WO	2010041179		4/2010
WO	WO 2010041179	A1	4/2010
WO	2010076761		7/2010
WO	WO 2010076048	A1	7/2010
WO	2011047836		4/2011
WO	WO 2011047836	A1	4/2011
WO	2011060292		5/2011
WO	2011141532		11/2011
WO	WO 2011141532	A1	11/2011
WO	WO 2012010317	A1	1/2012
WO	2013160278		10/2013

OTHER PUBLICATIONS

ISO/IEC Information technology—Automatic identification and data capture techniques—Bar code verifier conformance specification—ISO/IEC 15426-1:2006(E).
Fairley, "Codes and Coding Technology" LCGS, FIP3 and FLOM3; Published 2015.
English Translation JPH01233688A.
Wikipedia "Binary code"—htttp://de.wikipedia.org/wiki/binary code—5 pages.
Rosenbaum Oliver, "The Bar Code Dictionary" Cbhv.
Rosenbaum Oliver et al. "Bar-Code" Theory Distionary Software; Verlag Technik Berlin.
Potter Mathias et al, "BARCODE Introduction and applications," Verlag Heinz Heise.
Non-Final Office Action for U.S. Appl. No. 16/517,054 dated Nov. 13, 2019.
Non-Final Office Action for U.S. Appl. No. 16/538,752 dated Nov. 8, 2019.
Brief Communication for Opposition Proceedings for Appl 15197336.9 dated Mar. 19, 2020.
Oral Letter regarding the opposition Procedure dated Mar. 16, 2020 for EP 3 023 362.
Opposition oral Letter regarding the opposition procedure dated Mar. 16, 2020 for EP 023 362.
Wikipedia definition of Tiefzihen http://de.wikipedia.org/wiki/Tiefzhiehen.
Wikipedia definition of Stamping https://en.wikipedia.org/wiki/Stamping_(metalworking)
Wikiepedia definition of deep drawing http://en.wikipedia.org/wiki/Deep_drawing.
Regulation No. 1935/2004 of the European Parliament and of the Council of Oct. 27, 2004, Official Journal of the European Union.
Annex to the Communication Opposition Appl No. 15 197 336.9.
Brief Communication—Opposition Proceedings for Appl No. 15197336.9 dated Aug. 1, 2020.
Letter regarding Opposition Procedure for EP Patent No. 3 023 362 dated Dec. 19, 2019.
Brief Communication for Appl No. 15197336.9 dated Oct. 15, 2019.
"Information technology—Automatic indenfification and data capture techniqures—EAN/UPC bar code symbology specification" Second Edition: Dec. 15, 2009.
Letter accompanying subsequently flied items for EP3023362 KRO-44.
Brief Communication—Opposition Proceedings for Appl No. 15197336.9 dated Jul. 23, 2019.
Letter accompanying subsequently filed items for EP3023362 1038-CMS-O.
Brief Communication—Opposition proceedings for Appl No. 15197336.9 dated Jul. 12, 2019.
Opposition Procedure for EP Patent No. EP 3 023 362 dated Jul. 1, 2019.
Miscellaneous requests concerning client data EPO—Jun. 12, 2019.
Letter regarding the Opposition Procedure KRO-44/FWJPL dated Mar. 20, 2019.
Ralf Jesse, "Barcode" Gutachten zur Frage Begriffle, Bitcode/Binacode; Patents EP 3 023 362.
"Information technology—Automatic identifiaction and data capture techniques—Bar code verifier conformance specification—Part 1: Linear symbols" May 20, 2019 10:12.
Information Technology "Automatic idenfication and data capture techniques—Bar code print quality test Specification; Linear Symbols" German Version: EN ISO/IEC 15416:2001: Feb. 1998.
Declaration under 37 C.F.R. for U.S. Appl. No. 13/697,297.
Wikipedia "Binarcode" https://de.wikipedia.org/wiki/Binarcode.
Rosenbaum, Jessie, "Bar-Code" Theorie Lexikon Software.
Potter Mathia, "Barcode" Euinfuhrung and Andwendungen.
Oliver Rosenbaum "Das Barcode-Lexicon" edition advanced: cbhv; 1997.
Fairley Michael "Codes and Coding Technology" LCGS, FIP3 and FLOM3: A Labels & Labeling Publication; 2015.
Claims—Amended Claims with annotations-2.
Claims—May 20, 2019 Amended Claims with Annotations.
Auxiliary request during Opposition procedure—May 20, 2019.
Letter regarding opposition procedure for EP 3 023 362 dated Mar. 4, 2019.
Definition of Barcode by Merriam-Webster https://www.merriam-webster.com/dictionary/barcode.
Barcode-Wikitionary "Barcode" https://de.wiktionary.org/wiki/Barcode.

(56) **References Cited**

OTHER PUBLICATIONS

Strichcode—Wikipedia "Strichcode" https://de.wikiepdia.org/wiki/strichcode.
Reply of the patent proprietor to the notice of opposition Feb. 11, 2019; Appl No. 151973366.9.
Notice of Opposition against European Patent No. EP 3 023 362 dated Jul. 30, 2018.
Notice of opposition to a European patent, Patent No. EP3023362 dated Jul. 25, 2018.
Notice of Opposition for Appl No. 19165223.9 dated Feb. 24, 2020.
Wikipedia definition of "Tiefziehen" http://de.wikipedia.org/wiki/Tiefziehen.
Wikipedia definition of "Stamping (metalworking)" https://en.wikipedia.org/wiki/Stamping_(metalworking).
Notice of Opposition to a European Patent—Patent No. EP3521208 granted Feb. 19, 2020.
Opposition against European Patent No. 3521208—Application No. 19 165 223.9 dated Feb. 19, 2020.
Communication of Notice of Opposition dated Jan. 27, 2020 for Appl No. 19165219.7.
Wikipiedia definition of "Barcode".
"Regulartion (EC) No. 1935/2004 of the European Parliament and of the Council of Oct. 27, 2004" Official Journal of the the European Union.
Notice of opposition to a European Patent Patent No. EP3521210 dated Jan. 14, 2020.
English Translation of JP2003235733.
Konkordanzliste, Citations, Societe des Prouis Nestle S.A.
Notice of opposition against European Patent No. EP 3521210 dated Aug. 1, 2020.
Notice of Opposition to a European Patent for Patent No. EP3521210 dated Jan. 8, 2020.
Wikipedia Definition of "Barcode".
Notice of Opposition to a European Patent Patent No. EP3521209 dated Jan. 22, 2020.
Regulation (EC) No. 1935/2004 of the European Parliament and of the Counsel of Oct. 27, 2004; Official Journal of the European Union.
Wikipedia definition of "deep drawing" http://en.wikipedia.org/wiki/Deep_drawing.
Wikipedia Defintion of "Stamping (metalworking)" https://en.wikipedia.org/wiki/Stamping_(metalworking).
Wikipedia definition of "Tiefziehen" https://de.wikipedia.org/wiki/Tiefziehen.
Notice of Opposition: Opposition against European Patent No. 3 521 209 dated Jan. 22, 2020.
Notice of Oppostion to a European Patent for Patent No. EP3521209 dated Jan. 22, 2020.

* cited by examiner

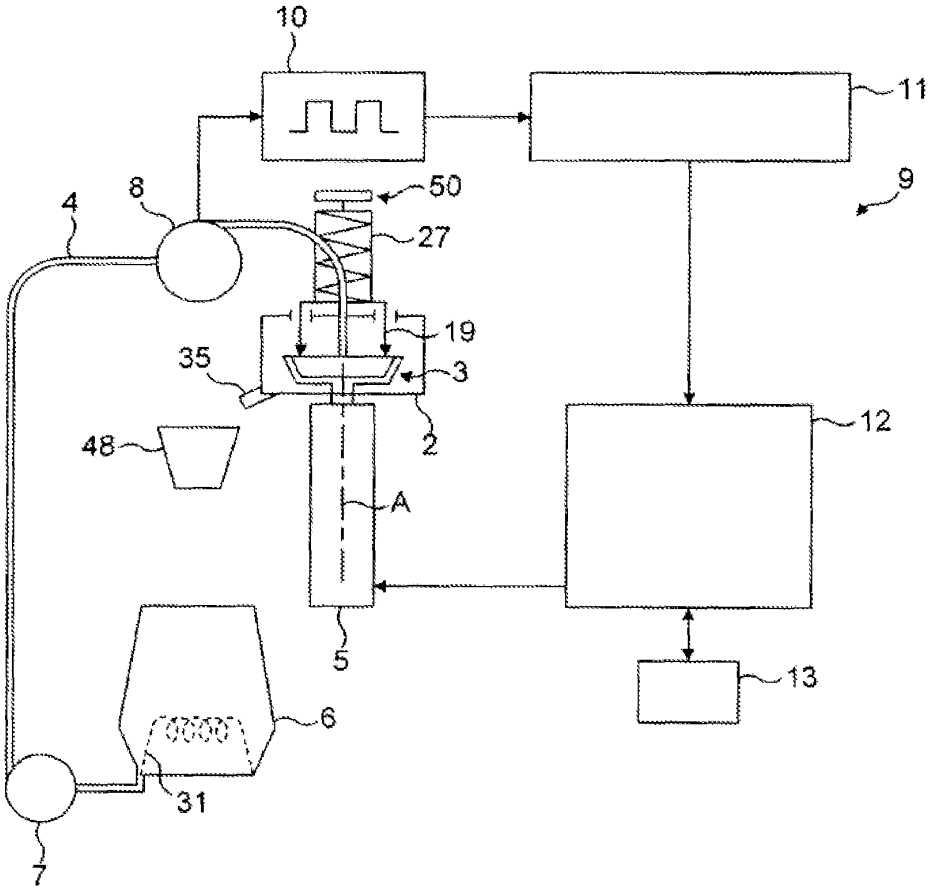

Fig. 1

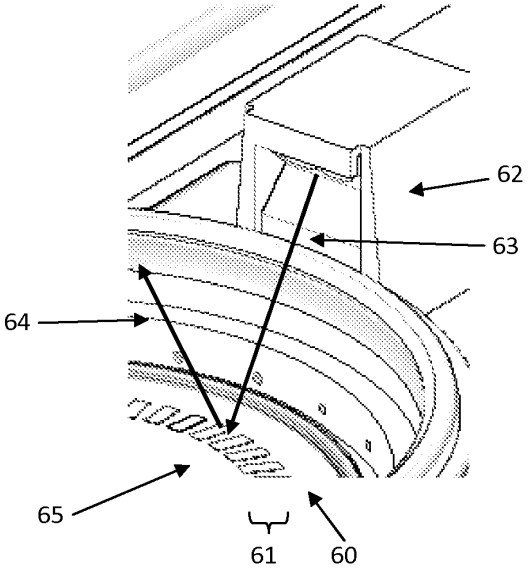

Fig. 2

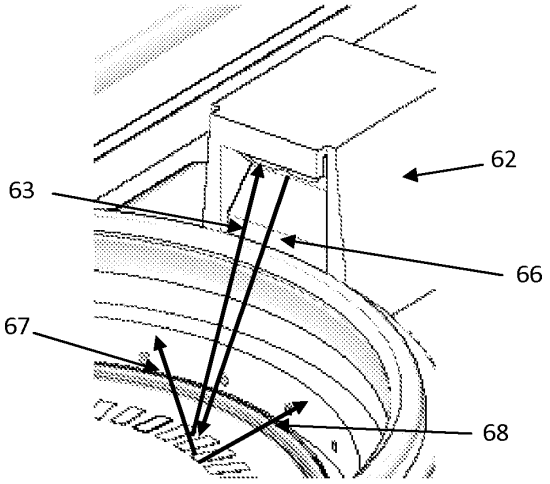

Fig. 3

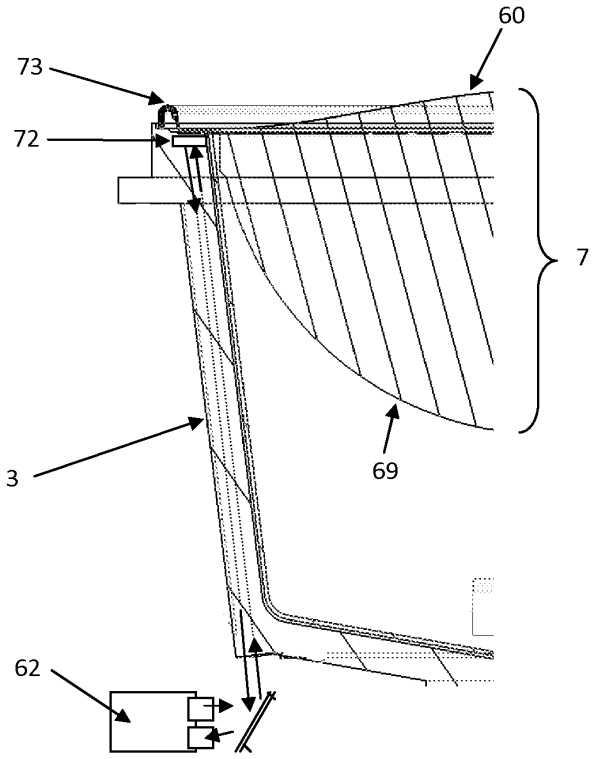

Fig. 4

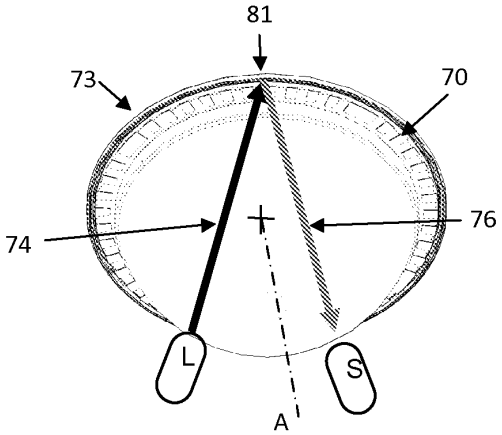

Fig. 5

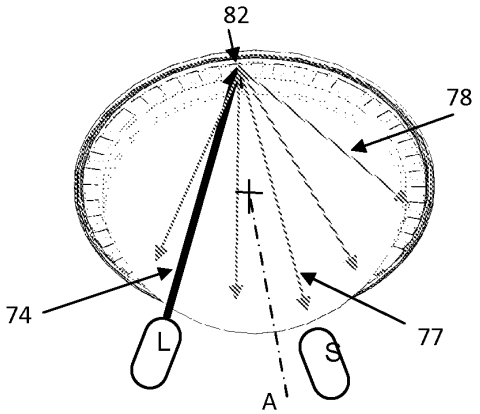
82
78
74
77
L
S
A

Fig. 6

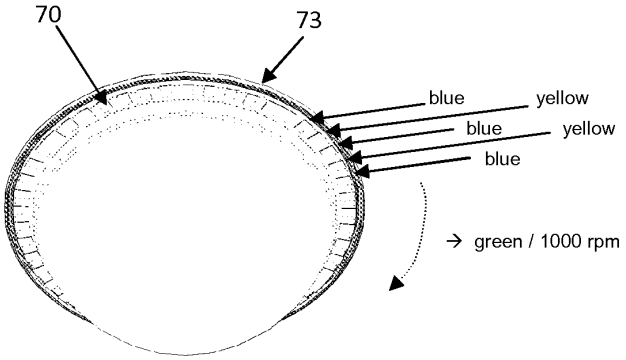
70
73
blue
yellow
blue
yellow
blue
→ green / 1000 rpm

Fig. 7

CAPSULE, SYSTEM AND METHOD FOR PREPARING A BEVERAGE BY CENTRIFUGATION

CROSS REFERENCE TO RELATED APPLICATIONS

The present application is a National Stage of International Application No. PCT/EP2011/057657, filed on May 12, 2011, which claims priority to European Patent Application No. 10162741.2, filed on May 12, 2010, and European Patent Application No. 10169374.5, filed on Jul. 13, 2010, the entire contents of which are being incorporated herein by reference.

INTRODUCTION

The invention relates to the preparation of a beverage by use of a capsule containing beverage ingredient in a beverage production device. The present invention in particular focuses on the detection of the capsule.

BACKGROUND ART

The preparation of a beverage by a capsule containing beverage ingredient is known. In general, the capsule is inserted in a beverage production device, such as a coffee machine, liquid is fed in the capsule and a beverage is extracted from the capsule under pressure or by gravity.

The preparation of a beverage by using the centrifugation is known. The principle mainly consists in providing beverage ingredient in a container of the capsule, feeding liquid in the receptacle and rotating the receptacle at elevated speed to ensure interaction of liquid with powder while creating a gradient of pressure of liquid in the receptacle; such pressure increasing gradually from the centre towards the periphery of the receptacle. As liquid traverses the coffee bed, extraction of the coffee compounds takes place and a liquid extract is obtained that flows out at the periphery of the receptacle.

The term "capsule" refers to any flexible, rigid or semi-rigid container containing beverage ingredient. Other synonymous to a capsule are: "pod", "pad", "cartridge" or "sachet". The capsule can be single use. The container can also be filled with ingredient by the user to form the capsule just before use.

The term ingredient means any suitable beverage substance such as ground coffee, soluble coffee, leaf tea, soluble tea, herbal tea, dairy powder, baby food, culinary powder and combination thereof.

The invention relates more particularly to the identification of the capsule by means of a code. The code may be necessary to control parameters in the beverage preparation device such as liquid or beverage flow rate, pressure, rotational speed, temperature and combinations thereof.

EP0451980 relates to packages containing comestibles for the preparation of beverages. Recognition means can comprise one or more strips of a magnetic material applied to the body of the package which can be read by an appropriate magnetic sensor, one or more shaped or divided areas of metal foil applied to the package body which cause an inductive effect on movement of the package in the machine, which inductive effect can be sensed; or one or more electrically conductive areas formed on the body of the package which can be sensed electrically.

WO02/28241 relates to an encoded coffee packet for use in the preparation of hot or cold beverages comprising a filter defining a cavity and a brewing ingredient within the cavity. The packet further comprises a machine-interpretable feature located on the filter such as a color, a shape, a glyph, a text string, a barcode or a digital watermark.

WO02/078498 relates to a machine-readable identifier on a portion package which contains ground coffee for espresso machine. The identifier can be a concentric barcode which is read when the capsule turns around an axis which is placed outside of its perimeter such as when the capsule is stored in a carousel.

WO2005044067 relates to a system for identifying a capsule having a code visible under UV light printed thereon or a magnetic code such as a ribbon or label. The code may be read by a turning magnetic reading head. However, such system is not adapted for detecting a capsule in a device using centrifugal forces for extracting the beverage.

WO2009007292 relates to a method for reading barcodes in a drinks machine when the brewing chamber is being closed from an open position to a closed position.

WO2010/026053 relates to a controlled beverage production device using centrifugal forces. The capsule may comprise a barcode provided on an outside face of the capsule and which enables a detection of the type of capsule and/or the nature of ingredients provided within the capsule in order to apply a predefined extraction profile for the beverage to be prepared.

A problem with identifying a capsule in a beverage preparation machine is that the retrieving or reading information from the capsule is not always reliable or convenient. The present invention brings a solution to this problem.

BRIEF DESCRIPTION OF THE INVENTION

The aim of the present invention is to propose an improved way to identify the capsule within a beverage production machine to ensure a more reliable and convenient retrieval or reading of information so as to adjust working parameters of the machine.

This aim is achieved by a capsule for the preparation of a beverage comprising a container and a beverage ingredient contained therein, wherein the container comprises a code adapted for being identified or read by external reading means, wherein the code is arranged on the container to be read while the capsule is rotated around an axis of rotation traversing the capsule.

More particularly, the capsule has a circumference wherein the code is arranged on the container along an arc-shaped or circular path of the circumference. In a particular mode, the capsule has a circumference wherein the code comprises successive segments which are individually rectilinear but extend substantially along at least a part of the circumference. More particularly, the code is arranged along at least a eighth of the circumference. This configuration provides a reliable reading or retrieval of information as well as an effective portion for information. In order to ensure a reliable reading or retrieval of information, the code is repeated along said circumference. The repetition ensures a higher probability that at least one code is readable but also may potentially reduce the reading time.

Preferably, the code is an optical code. The code may be a bit code formed by a series of discrete polygonal (e.g., rectangles or squares) or dot surfaces printed on the container and/or embossed in the container.

The code may printed by a visible ink by human eyes under natural light or, alternatively, an ink which is not visible by human eyes under natural light (e.g., ink visible under UV).

Preferably, the code is printed or embossed to form a pattern which possesses surfaces having different reflective and/or absorbing properties to light. In particular, the pattern possesses first surfaces and second surfaces having different reflective and/or absorbing properties to light. More particularly, the pattern possesses first surfaces inclined mirroring or absorbing properties to light and second surfaces having flat mirroring or flat reflective properties to light.

In a possible mode, the code is mechanically embossed or engraved on the container by laser or by other means such as a press.

In an embodiment, the container comprises a body and a lid connected to the body and wherein the code is present on the lid of the container. The lid may be a closed foil and/or a filter, for example.

In another embodiment, the code is present on the rim of the capsule. In the most preferred embodiment, the code is present on the bottom of the rim of the capsule which is opposed to the lid of the capsule. The bottom of the rim is sufficiently away from the liquid injection and beverage delivery areas so that there is a lower risk for the code to become unreadable such if partly or totally hidden or soiled by beverage residues or otherwise (e.g., coffee particles). As a result, the reading is made more reliable. The reading may also be carried out while the capsule is in place in the beverage production device. Therefore, the preparation of the beverage is simplified and the preparation time can be reduced.

The invention further relates to a system for preparing a beverage from a capsule as aforementioned and further comprising a beverage preparation device; wherein the device comprises capsule holding means for holding the capsule and rotational drive means for driving the holding means and capsule in rotation along said axis of rotation and reading means arranged for reading the code when the capsule is rotated along said axis.

In particular, the reading means may comprise a light emitter and a light sensor. In an alternative, the reading means comprises an inductive sensor. The optical reading means or inductive sensor may be arranged to detect a code on the rim of the capsule.

The invention further relates to a method for preparing a beverage from a system comprising a capsule as aforementioned and a beverage preparation device; wherein the device comprises capsule holding means for holding the capsule therein and rotational drive means for driving the holding means and capsule in rotation along said axis of rotation and reading means arranged for reading the code when the capsule is rotated along said axis.

The invention is further described in the appended claims and the following detailed description.

BRIEF DESCRIPTION OF THE FIGURES

The present invention will be better understood thanks to the detailed description which follows and the accompanying drawings, which are given as non-limiting examples of embodiments of the invention, namely:

FIG. **1** illustrates the basic principle of the centrifugal extraction,

FIG. **2** illustrates the reading method of a mark on the lid surface of the capsule,

FIG. **3** illustrates the reading method of an absence of the mark,

FIG. **4** illustrates an alternate position of the code on the capsule, in particular, when placed on the underside of the rim of the capsule, and the capsule fitted into a capsule holder of the extraction device,

FIGS. **5** and **6** illustrate the combination of a laser source and a detector in positive and negative detection, for example, for the alternate position of the code of FIG. **4**,

FIG. **7** illustrates the detection of a color code on the capsule, for example, for the alternate position of the code of FIG. **4**.

DETAILED DESCRIPTION

FIG. **1** illustrates an example of a beverage preparation system **1** as described in WO2010/026053 for which the capsule of the invention can be used.

The centrifugal unit **2** comprises a centrifugal cell **3**. The cell **3** may comprise a capsule holder and a capsule received therein. The centrifugal unit is connected to driving means **5** such as a rotary motor. The centrifugal unit comprises a collecting part and an outlet **35**. A receptacle **48** can be disposed below the outlet to collect the extracted beverage. The system further comprises liquid supply means such as a water reservoir **6** and a fluid circuit **4**. Heating means **31** may also be provided in the reservoir or along the fluid circuit. The liquid supply means may further comprise a pump **7** connected to the reservoir. A flow restriction means **19** is provided to create a restriction to the flow of the centrifuged liquid which leaves the capsule. The system may further comprise a flow meter such as a flow-metering turbine **8** for providing a control of the flow rate of water supplied in the cell **3**. The counter **11** can be connected to the flow-metering turbine **8** to enable an analysis of the generated impulse data **10**. The analysed data is then transferred to the processor **12**. Accordingly, the exact actual flow rate of the liquid within the fluid circuit **4** can be calculated in real-time. A user interface **13** may be provided to allow the user to input information that is transmitted to the control unit **9**. Further characteristics of the system can be found in WO2010/026053.

In the following examples (see FIG. **4**), the capsule comprises a cup-shaped body **69** extending by a flange-like rim **73**. A lid such as a foil or membrane (liquid-tight or permeable to liquid) **60** is connected to the body, e.g., sealed on the rim. The body **69** extends from a bottom end of the body **69** to a top end of the body **69** where the body **69** terminates such that a height of the body **69** is the distance from the bottom end to the top end, the flange-like rim **73** extends from the top end of the body **69**, and the lid **60** has a height that is less than the height of the body **69**. The capsule is filled with beverage ingredient such as ground coffee.

The capsule is designed for rotating around an axis A. This axis A crosses perpendicularly the center of the membrane which has the form of a disk. This axis A exits at the center of the bottom of the body. This axis A will help to define the notion of "circumference" which is a circular path located on the capsule and having the axis A as reference axis. This circumference can be on the lid, e.g., membrane or on the body part such as on the flange-like rim. The lid may be impervious to liquid before insertion in the device or it may be pervious to liquid by means of small openings or pores provided in the center and/or periphery of the lid. The code is spread along the circumference or a part of the circumference. The code may comprise successive arch-shaped segments. The code may also comprise successive segments which are individually rectilinear but extend along at least a part of the circumference. According to one embodiment, the sensor cannot read the code without the

rotation of the capsule. This is the case where the code is spread along at least a eighth, preferably at least a quarter of the circumference or even more. The fact that the code is placed along an arc-shaped line render the reading by a sweep beam very difficult. This is why the rotation of the capsule plays an important role. In case that the code is located on the body, it is then necessary to rotate the capsule to have access, for the sensor, to the entire set of marks composing the code. The code is further located close to the peripheral edge of the capsule. The peripheral edge is defined as the outermost circular line of the capsule. Preferably, the distance of the code from the peripheral edge is not more than 10 mm, more preferably not more than 8 mm.

According to an embodiment, the code is printed by an ink which is not visible by human eyes under natural light (e.g., ink visible under UV). In this case, the sensor further comprises a UV-light beam source and a UV detector.

The code is preferably repeated along the circumference in order to ensure a reliable reading. The code is repeated at least twice on the circumference. Preferably, the code is repeated three to six times on the circumference. Repetition of the code means that the same code is duplicated and the successive codes are positioned in series along the circumference so that upon a 360-degree rotation of the capsule, the same code can be detected or read more than one time.

EXAMPLES

1) Optical Reading On Foil, Respectively On Top Side Rim Of Capsule (FIGS. **2** and **3**):

A light beam is projected onto the capsule's lid, e.g., membrane or foil **60**, as illustrated on FIG. **2**.

Onto the capsule foil **60**, a plurality of bits forming the code **61** is applied along a circular or arc-shaped path.

Preferably, the code is placed on a flat portion of the lid and close to the peripheral edge of the capsule. The code is preferably placed the lid that is supported by the flange-like rim of the capsule or overlaps with the rim. Hence, the code is not distorted due to mechanical constraints and can be read more reliably.

The marks may consist of:

Mirroring or absorbing surfaces for providing bit "**0**" and,

Diffusing and reflective surfaces for providing bit "**1**"

The binary values "0" and "1" are arbitrary chosen and can be inversed.

The code is read by rotating the capsule along a central axis A (FIG. **1**).

The reader or sensor **62** is part of the centrifugal unit **2** and consists of

A light source with or without focusing optic and

A light sensor with or without focusing optic.

The light can be:

Non polarized or

Polarized (laser) or

Spectrum: Any, but preferably infra red.

The code can be applied on the capsule by:

Printing (absorbing/reflecting+diffusing), visible, invisible or

Embossing (mirroring+rough reflecting+diffusing) or

Laser engraving.

Optionally, the bit code may also consist of different color patterns combined with a color reading device. The combination of different colors and reading at a specific rotational speed results in a well defined "mixed color". As an example, a capsule with half the circumference in blue and the other half in yellow would result in reading a green color during rotation. In the same manner, one third in blue and the remaining part in yellow will give another color. In this case, the light could be a simple light source without specific convergence means.

As illustrated in FIG. **2**, when the light beam **63**, sent by the light source of the sensor **62**, touches the mirror code pattern (small rectangles **65**) it reflects in a reflective beam **64** which is not received by the sensor.

As the capsule is rotated (FIG. **3**), the light beam **63** touches a diffuse reflecting surface (surface between the small rectangles) and is partially reflected to the sensor. A reflective beam **66** is received by the sensor whereas other beams **67**, **68** are diffused or reflected outside the sensor.

2) Optical Reading On Rim Bottom Side Of Capsule (FIGS. **4** to **7**):

The capsule **7** may comprise a code **70** on the bottom side **72** of its rim **73**. The bit code is formed of a succession of small rectangular surfaces having light mirroring properties and intermediate surfaces having flat mirroring and/or diffusing properties. The surfaces are arranged in a circular pattern or an arc-shaped pattern at least along an angular portion of the rim.

A light beam **74** is projected to the capsule's rim **73**.

Onto the capsule rim, a bit code is applied along a circular or arc-shaped path of the rim.

The bit code may consist of:

Inclined mirroring or (flat) absorbing surfaces for bit "**0**" and

Flat mirroring or flat reflective (diffusing) surfaces for bit "**1**"

The bit code is read by rotating the capsule along its central axis A.

The reader may consist of

A light source with/without focusing optic and,

A light sensor with/without focusing optic.

The light can be:

Non polarized or

Polarized (laser) or

Spectrum: Any, but preferably infra red.

The code can be applied on the capsule by:

Printing (absorbing/reflecting+diffusing), visible, invisible or,

Laser engraving (e.g. for absorbing/reflecting–diffusing) surfaces or,

Embossing: Flat and inclined mirroring surfaces.

In the embodiment of the FIG. **4**, the light source is placed at the bottom of the centrifugal cell **3**. This cell is light conductive allowing the beam to reach the bottom side **72** of its rim **73**. The reflected light is conducted by the transparent (or light conductive) centrifugal cell **3** to reach the sensor **62**. In case that the sensor **62** cannot be aligned with the transparent part of the centrifugal cell **3**, a mirror can be placed as illustrated in the FIG. **4** to deflect the forward and backward beams.

On FIG. **5**, the light beam **74** from the light source "L" touches the mirror surface of the code (small rectangle **81**) and is reflected into a reflective beam **76** to the sensor "S" with high intensity. A bit such as "**0**" or "**1**" is thereby provided to the control unit.

On FIG. **6**, the light beam **74** from the light source "L" touches diffusing or absorbing surfaces (surface **82** between two small rectangles). The light beam **77** that reaches the sensor S is of small intensity. Other beams such as beam **78** are diffused outside the sensor S due to the diffusing properties of the surface.

In each configuration (e.g., FIGS. **5**-**6**), a bit such as "**1**" or "**0**" is provided to the control unit.

Therefore, the number of bits and their bit code depend on the number and specific arrangement of mirror surfaces (e.g. rectangles) and diffusing or absorbing surfaces (e.g., zones between the rectangles). The same sequence of bits forming a "code" can be repeated several times on the circumference of the rim. This repetition provides redundancy and more reliability to the reading.

Optionally (FIG. **7**), the code comprises different color patterns combined with a color reading device. The combination of different colors and reading at a specific rotational speed results in a well defined "mixed color". As an example, a capsule with half the "dots" in blue and the other half in yellow would result in reading a green color during rotation.

3) Application Modes Of Codes Onto A Capsule

The codes described in the previous examples can be applied by different methods onto a capsule such as by:

Printing or mechanical deforming on a formed capsule or,

Printing or mechanical deforming on the capsule raw material (foil) before container forming or,

Printing on outer surface of a capsule container or,

Printing on the inner surface of a capsule container, using the curl as information support (Aluminum capsule technology).

4) Inductive Code Reading:

Another mode consists in sensing a code provided on a metallic surface of the capsule using an inductive sensor. The code is formed by reliefs or recesses in the metallic surface. For instance, the capsule comprises a circumferential metal rim which comprises a succession of discrete slots and/or bumps. When the capsule is rotated about its central axis, the rim is moved relative to the sensor such that the slots and/or bumps are detected. The code can be read on a time base of a CPU of the beverage preparation device. The maximum rotational speed to read the code depends on the used sensor and the internal CPU of the device.

5) Other General Characteristics To All Embodiments:

The speed for reading can, for instance, be comprised between 0.1 and 1000 rpm.

When reading the code, liquid can already be fed in the capsule for providing a pre-wetting of the beverage ingredients.

The code preferably comprises three sections, the synchronization section, the payload section and the verification section. The synchronization section serves for the synchronization purpose i.e. to inform the sensor when the code begins. Since the speed of the rotation of the capsule can vary, the synchronization is achieved through a known sequence of bits such as **0**,**1**,**0**,**1**. Then the payload of the code identifying the capsule can be read. In order to avoid misinterpretation of the code, the payload can be followed by verification bits. These bits can be a checksum on the payload or a similar verification function.

The code can be replicated along the code path so that if one code gives a wrong verification value, the other code(s) can be taken into account.

The invention claimed is:

1. A capsule for the preparation of a beverage, the capsule comprising a container configured to house a beverage ingredient, the container comprises a cup-shaped body having a flange-like rim, a lid connected to the cup-shaped body, and a code adapted for being identified or read by an external reader, the code is arranged on a bottom of the flange-like rim, which is opposed to the lid, to be read while the capsule is rotated around an axis of rotation traversing the capsule,

wherein the container comprises a circumference, the code comprises successive segments that extend substantially along at least an eighth of the circumference, the cup-shaped body extends from a bottom end of the cup-shaped body to a top end of the cup-shaped body where the cup-shaped body terminates such that a height of the cup-shaped body is the distance from the bottom end to the top end, the flange-like rim extends from the top end of the cup-shaped body, and the lid has a height that is less than the height of the cup-shaped body.

2. The capsule of claim **1**, wherein the code is arranged on the container along an arc-shaped or circular path of the circumference of the container.

3. The capsule of claim **1**, wherein the code is repeated along the circumference of the container.

4. The capsule of claim **1**, wherein the code is a bit code formed by a series of discrete polygonal or dot surfaces printed on and/or embossed in the container.

5. The capsule of claim **1**, wherein the code is printed by an ink which is not visible by a human eye under natural light.

6. The capsule of claim **1**, wherein the code is printed or embossed by a pattern which possesses surfaces having different reflective and/or absorbing properties to light.

7. The capsule of claim **6**, wherein the pattern possesses a first surface having inclined mirroring or absorbing properties to light and a second surface having flat mirroring or flat reflective properties to light.

8. The capsule of claim **1**, wherein the code is mechanically embossed or engraved on the container by a laser.

9. The capsule of claim **1**, comprising a peripheral edge that is an outermost circular line of the capsule, wherein the code is positioned within 10 mm of the peripheral edge.

10. A single-serve capsule for making a beverage, comprising:

a base element with a cavity, in which a raw beverage material is provided,

a flange horizontally extending from the base element,

a membrane that is configured to close the cavity, the membrane is fastened to a top side of the flange, and

an identifier, which makes it possible to individualize the respective single-serve capsule,

wherein the identifier is a barcode that is provided on a bottom side of the flange, the identifier extends around an entire circumference of the flange, the bottom side of the flange is opposite the top side of the flange to which the membrane is fastened.

11. The single-serve capsule according to claim **10**, wherein the barcode is printed by material removal.

12. The single-serve capsule according to claim **10**, wherein the identifier comprises metal.

13. The single-serve capsule according to claim **10**, wherein the barcode extends around an entire perimeter of the base element.

14. The single-serve capsule according to claim **10**, wherein the barcode has at least two areas which differ in their optical properties.

15. The single-serve capsule according to claim **10**, wherein the identifier is electrically conductive.

16. The single-serve capsule according to claim **10**, wherein the identifier is a machine-readable imprint.

17. The single-serve capsule according to claim **10**, wherein the identifier is mechanically embossed on the capsule.

18. The single-serve capsule according to claim **10**, wherein the identifier is mechanically engraved on the capsule.

19. The single-serve capsule according to claim **10**, wherein the identifier is provided on a metallic surface of the capsule.

20. The single-serve capsule according to claim **19**, wherein the identifier is configured to be sensed by an inductive sensor.

21. A single-serve capsule for making a beverage, comprising:

a base element with a cavity, in which a raw beverage material is provided,

a flange horizontally extending from the base element,

a membrane that is configured to close the cavity, the membrane is fastened to a top side of the flange, and

an identifier, which makes it possible to individualize the respective single-serve capsule,

wherein the identifier is a barcode that is provided on a bottom side of the flange, the barcode extends around an entire perimeter of the base element, the bottom side of the flange is opposite the top side of the flange to which the membrane is fastened.

* * * * *