United States Patent [19]

Piana

[11] **4,389,925**

[45] **Jun. 28, 1983**

[54] **BEVERAGE EXTRACTING AND DISPENSING MACHINE**

[75] Inventor: **Giuseppe S. Piana,** Milan, Italy

[73] Assignee: **UNOPER S.r.l.,** Attinara, Italy

[21] Appl. No.: **272,240**

[22] Filed: **Jun. 10, 1981**

[30] **Foreign Application Priority Data**

Jun. 11, 1980 [IT] Italy 22723 A/80

[51] **Int. Cl.**[3] **A47J 31/30**

[52] **U.S. Cl.** ..... **99/289 R;** 99/295; 99/302 P

[58] **Field of Search** ..... 99/289 R, 289 P, 295, 99/297, 300, 302 R, 302 P; 222/129.1

[56] **References Cited**

U.S. PATENT DOCUMENTS

3,266,410	8/1966	Novi	99/302 P
3,327,614	6/1967	Bridges	99/302 P
3,604,335	9/1971	Lafitte	99/302 P
3,754,463	8/1973	Vernooy	99/302 R

Primary Examiner—Robert W. Jenkins

Attorney, Agent, or Firm—Sughrue, Mion, Zinn, Macpeak and Seas

[57] **ABSTRACT**

A beverage extracting and dispensing machine for use with flattened round cartridges, which contain a brewable product, such as ground coffee, freeze-dried coffee, tea, broth and the like. The cartridges have permeable upper and lower walls and a substantially cylindrical sidewall.

A cartridge may be slid to a brewing station in which it is laterally embraced by opposite clamping jaws. During its movement to the brewing station a new cartridge spreads the jaws apart and pushes an old cartridge away from the brewing station. The spreading apart of the jaws starts an automatic brewing cycle at the beginning of which a presser plate is lowered onto the cartridge and presses it with a tight seal on an underlying fixed support while the cartridge is laterally clamped by the jaws. Then a predetermined amount of hot water under pressure is flowed into the cartridge from a passage in the presser plate and the beverage is dispensed from the cartridge through a passage in the support to fill an underlying cup or similar container.

8 Claims, 8 Drawing Figures

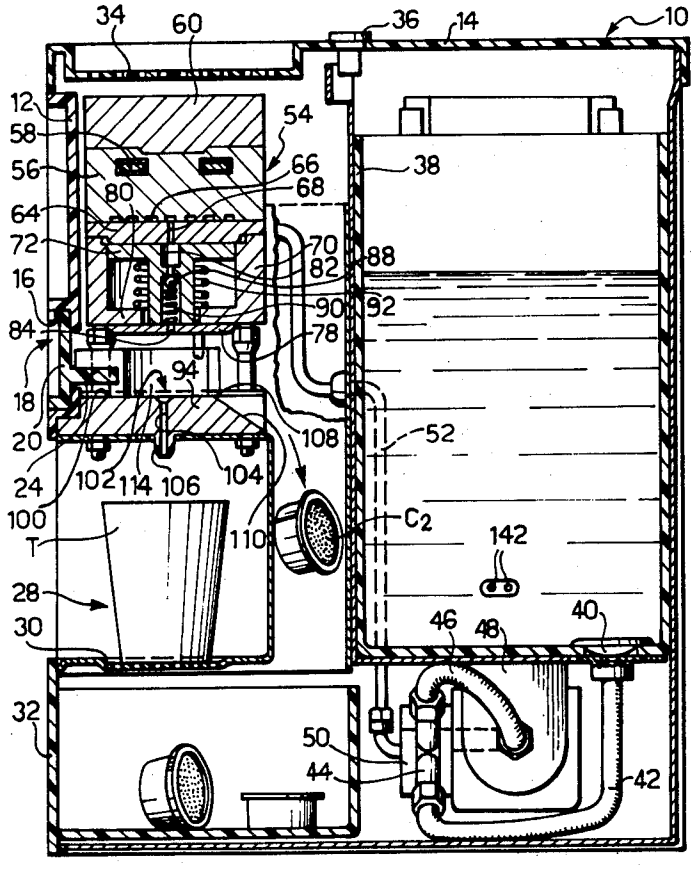

FIG. 1

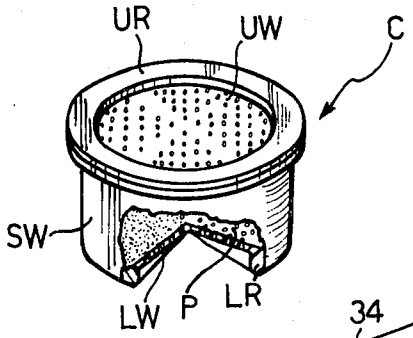

FIG. 2

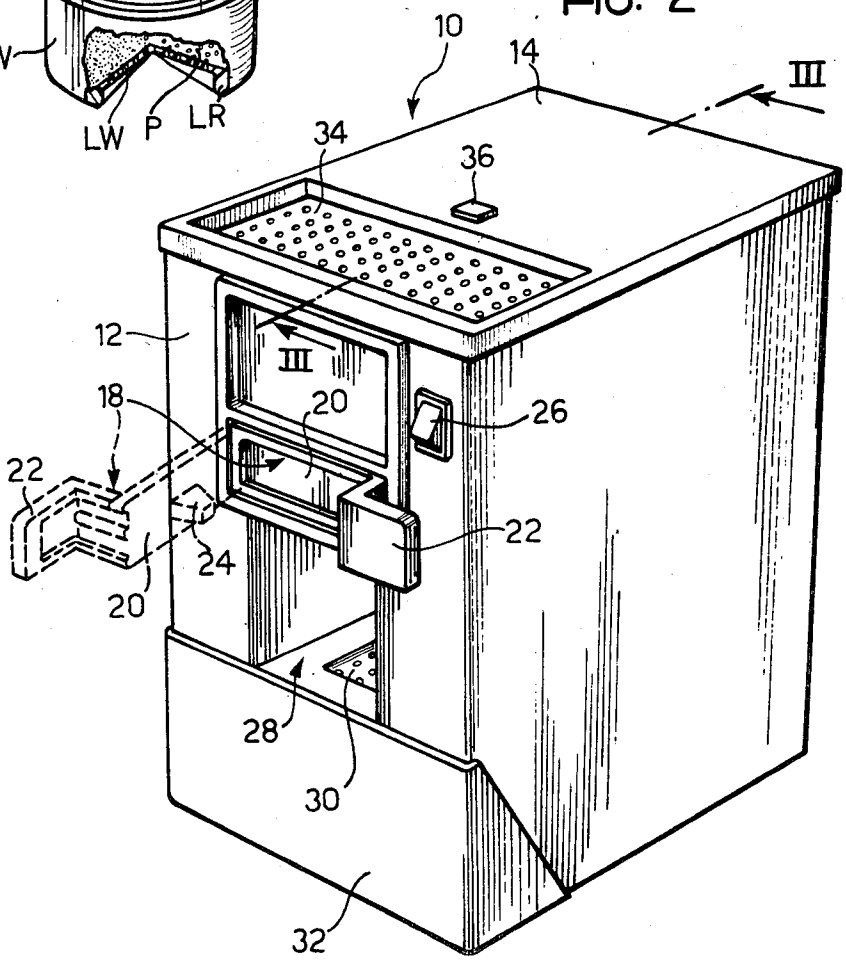

FIG. 3

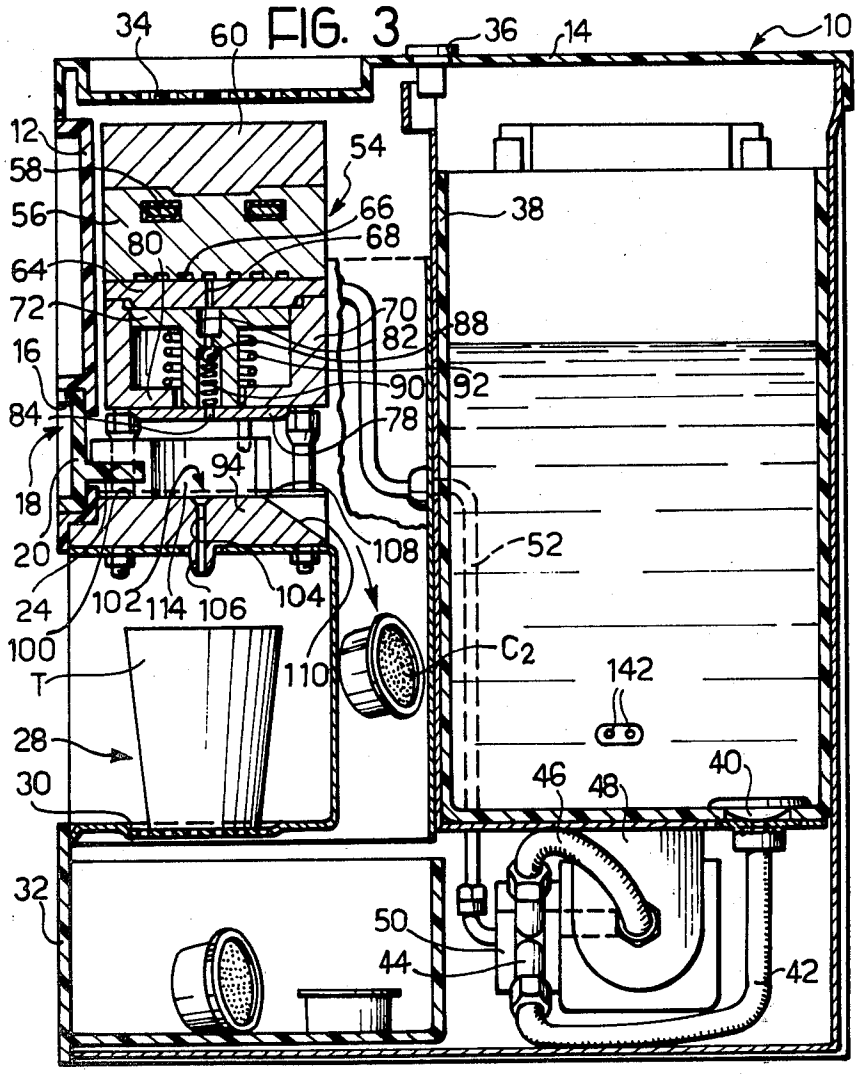

FIG. 6

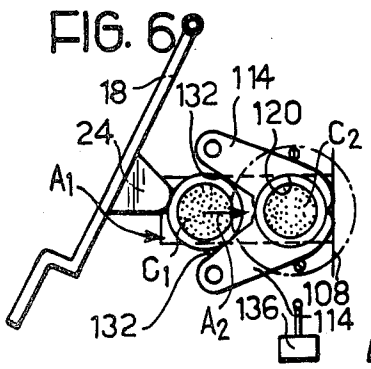

FIG. 7

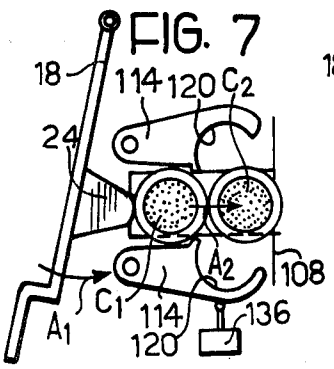

FIG. 8

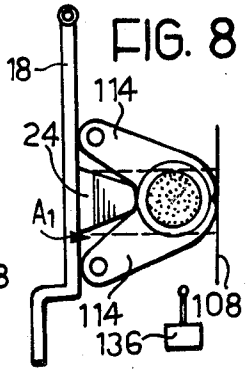

FIG. 4

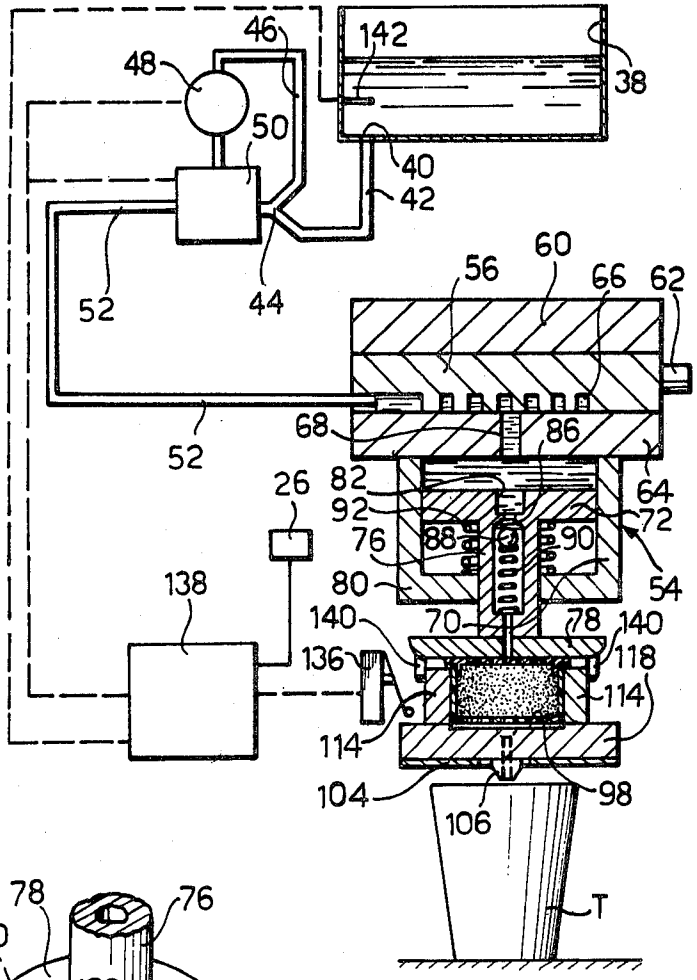
46
142
48
38
50
40
42
52
44
60
56
66
62
68
86
52
26
82
64
92
72
76
88
90
54
80
138
140
70
78
140
136
118
114
114
104
98
106
T

FIG. 5

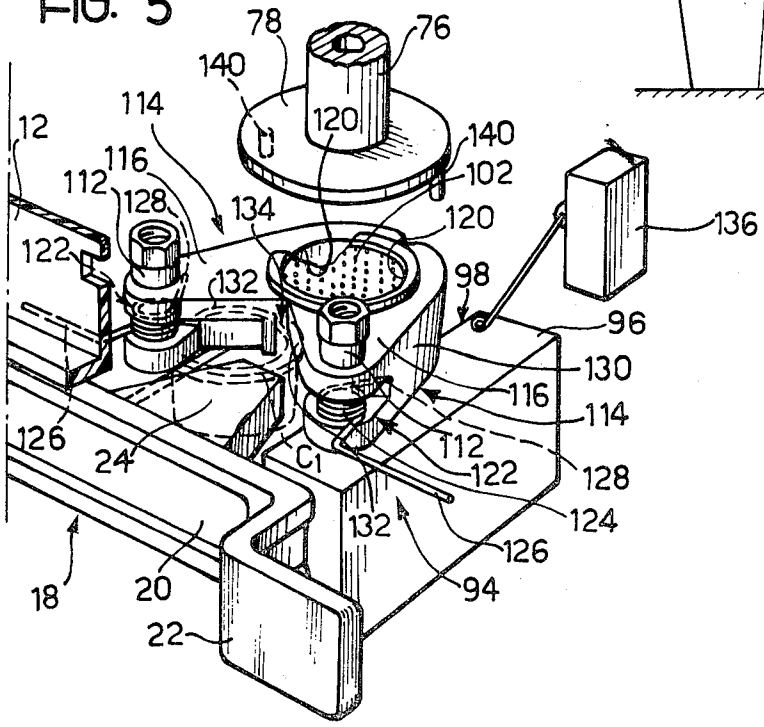
78
76
140
114
120
12
140
116
102
112
128
134
120
136
122
132
98
96
130
116
114
126
24
C1
112
122
128
124
132
126
18
20
94
22

BEVERAGE EXTRACTING AND DISPENSING MACHINE

BACKGROUND OF THE INVENTION

The present invention relates to beverage extracting and dispensing machines for use with flattened round cartridges containing ground coffee or other brewable products such as freeze-dried coffee, tea, broth and the like.

Cartridges of this kind, which have recently come into usage, comprise a hollow body with a substantially cylindrical sidewall and upper and lower endwalls. The upper and lower endwalls are grid-like, perforate or porous to be permeable to water, while the sidewall is imperforate and substantially rigid. The cartridge body is economically made of a plastics material adapted for use with foodstuffs.

Cartridges of the above kind are sold in sealed packages of the blister type which have the advantage of being highly hygienical. These packages are usually in the form of strips having a series of blisters each of which contains a single cartridge.

The cartridges are adapted for use in more or less conventional, manually operated espresso machines, but also in automatic, coin-operated brewing machines. In the latter case the cartridges must be unpacked prior to being stacked in a magazine inside the machine cabinet. The unpacked cartridges in the magazine are exposed to dirt and contamination.

Moreover, the existing coin-operated brewing machines are rather complicated and costly, since they incorporate, in addition to a brewing assembly, a transfer mechanism for transferring each time a new cartridge from the magazine to a brewing station and a used cartridge from the brewing station to a waste receptacle. They also incorporate control means which are operated by the insertion of a coin to cause the transfer mechanism and the brewing assembly to accomplish the respective working cycles in order to dispense the beverage.

An example of a transfer mechanism of the above kind is disclosed in German Offenlegungsschrift No. 26 07 612 published Sept. 1, 1977.

Coin-operated brewing machines requiring the insertion of a cartridge by the user in addition to the insertion of a coin or token to start their operation could incorporate less complicated mechanisms. However, such machines would be impractical from the users' point of view.

OBJECT OF THE INVENTION

The object of the invention is to provide a brewing machine for use with cartridges of the above kind which is adapted to be operated by the simple insertion of the cartridge proper into a brewing station, and which is of a very simple construction, without complicated cartridge transfer mechanisms.

The scope of the invention is defined by the attached claims.

In a machine according to the invention the cartridges themselves may be used as tokens or 'coins' to start an automatic brewing cycle.

Users may purchase the cartridges in their packages in which the cartridges are sealed in hygienical conditions and a cartridge at a time may be taken away from the package for its immediate use in the brewing machine.

DRAWINGS

The invention may be better understood by reading of the description which follows, made with reference to the accompanying drawings, in which:

FIG. 1 is a perspective view of a cartridge adapted for use in an automatic beverage extracting and dispensing machine according to the invention,

FIG. 2 is a perspective view of a beverage extracting and dispensing machine according to a preferred embodiment of the invention,

FIG. 3 is a cross-sectional view in the plane indicated by III—III in FIG. 2, with the brewing assembly in the rest position,

FIG. 4 is a fragmentary cross-sectional view, in an enlarged scale, of the brewing assembly in the working position, the figure also diagrammatically showing the water and electric systems of the machine,

FIG. 5 is a perspective detail view which shows i.a. a support plate, cartridge-clamping jaws and a lower portion of the brewing assembly of the machine, and

FIGS. 6 to 8 are plan views from above which diagrammatically show the parts of FIG. 5 in three different conditions.

DESCRIPTION OF THE PREFERRED EMBODIMENT

Referring to FIGS. 1 and 4, a cartridge C has a hollow body made of a plastics material adapted for foodstuffs. The body comprises an imperforate, substantially cylindrical sidewall SW, an upper wall UW and a lower wall LW. Both the upper and lower walls are substantially flat and are bordered by respective projecting sealing upper and lower rims UR, LR.

Both the upper and lower endwalls, UW, LW are grid-like or may have perforations of another kind or a suitable porosity. The cartridge body contains a brewable product P from which a beverage can be obtained by flowing hot water under pressure therethrough.

Referring now to FIGS. 2 and 3, an automatic beverage extracting and dispensing machine according to the invention has a cabinet generally indicated by **10**.

The cabinet includes i.a. a front wall **12** and a removable upper wall or lid **14**. The front wall **12** has a horizontally elongated rectangular window **16**. The window **16** may be closed by a lever arm in the form of a flap **18**, the left end of which, as viewed in FIG. 2, is hinged about a vertical axis to the front wall **12** on the corresponding side of the window **16**.

The hinged flap **18**, which is advantageously a moulded plastics piece, comprises an elongated rectangular portion **20** which is adapted to fit into the window **16** to close the latter, and a staggered portion **22** which may be used as a handgrip to manually open and close the flap **18**.

The flap **18** has, between its ends, an integrally formed projection **24** which is adapted to penetrate into the cabinet **10** for the purpose which will be made clear below.

A start-stop push-button switch **26** is mounted on the front wall **12**. The push-button of the switch **26** may be of transparent plastic material and a warning lamp may be incorporated in the switch to indicate when the machine is ready for use.

A receptacle **28** extends in the cabinet **10** from the front wall **12** under the window **16** and has a perforated

bottom wall **30** on which a cup, tumbler or similar container T may be placed to receive a beverage, as it will be explained below.

The cabinet **10** is provided with a waste receptacle in the form of a drawer **32** which underlies the bottom wall **30** of the receptacle **28** and which is adapted to collect wasted beverage or water dripping from the bottom wall **30**. The drawer **32** is also adapted to receive used cartridges dumped from the brewing station of the machine (see below).

The upper wall **14** of the cabinet **10** has a front apertured vent portion **24** for the escape of vapours leaking from the brewing assembly.

The upper wall **14** is removable from the cabinet and may be secured thereto by means of a key-lock **36**.

Referring now to FIGS. **3** and **4**, the rear portion of the cabinet **10** contains a water tank **38** which is removable for cleaning purposes. The tank **38** may be filled with cold water after removal of the upper wall or lid **14**.

The water tank **38** has a bottom outlet **40** which is connected by a flexible conduit **42** to one of the arms of a Y pipe fitting **44**. The other arm of the Y fitting **44** is connected by a flexible conduit **46** to the inlet of a motor-driven pump **48**. The leg of the Y fitting **44** is connected to one of the outlets of a three-way solenoid valve **50**, as better shown in FIG. **4**. The two arms of the Y fitting **44** are in permanent communication with each other.

The outlet of the pump **48** is connected to the inlet of the solenoid valve **50**. The other outlet of the solenoid valve **50** is connected by a flexible feed conduit **52** to the inlet of a brewing assembly, generally indicated by **54**.

The brewing assembly **54**, which is mounted in the cabinet **10** under the apertured wall portion **34**, comprises heating means in the form of a heating metal plate **56**. An electric heating resistance **58** is incorporated, in a known manner, in the heating plate **56**. To the upper face of the heating plate **56** there is affixed a metal block **60** which has the function to increase the thermal capacity of the plate **56**.

The resistance **58** has associated thereto a thermostatic switch **62** which opens when the temperature of the plate **56** raises above a predetermined value (for example 90° C.).

The lower face of the heating plate **56** is sealingly clamped to the upper face of a head-plate **64**. The lower face of the heating plate **56** has a labyrinth groove therein which, together with the upper face of the head-plate **64**, defines a labyrinth passage **66** whose inlet is connected to the feed conduit **52**. The head-plate **64** has a central vertical passage **68** which constitutes the outlet from the labyrinth passage **66**.

The head-plate **64** constitutes the upper end of a vertical cylinder **70**. A flattened piston **72** is sealingly slidable in the cylinder **10**. The passage **68** opens above the piston **72**.

The piston **72** has a depending integral hollow stem **76**.

A presser plate **78** is affixed to the lower end of the stem **76** under a lower endwall **80** of the cylinder **70** through which the stem **76** extends.

A coaxial passage **82** vertically extends from the upper face of the piston **72** and opens in the centre of the lower face of the presser plate **78** through an orifice **84**. A valve seat **86** in the passage **82** is controlled by a ball check valve **88** which is biassed against the seat by a coil spring **90** in the passage **82**. The piston **72** and the presser plate **78** are biassed upwardly by a coil spring **92** which is interposed between the piston **72** and the lower endwall **80**.

Referring now to FIGS. **3** to **7**, a fixed support in the form of a metal support plate **94** is mounted in the cabinet **10** under the presser plate **78**. The support plate **94** has a flat upper face **96** with a shallow slot or channel **98** therein. The width of the channel **98** corresponds to the diameter of the cartridges as C (FIG. **1**) to be used in the brewing machine.

The channel **98** is perpendicular to the front wall **12** of the cabinet **10** and has a leading section **100** which is located just behind the window **16**. An intermediate section of the channel **98** defines a brewing station **102** which is vertically aligned under the orifice **84** of the presser plate **78**. The support plate **94** has a vertical outlet passage **104** which is in vertical alignment with the orifice **84** and which opens in the receptacle **28** through a dispensing nozzle **106** which is integrally formed with the plate **94**.

At its end opposite to the leading section **100** the channel **98** has a trailing edge **108** which is followed by a chute **110**. As it will be explained below, a used cartridge may be dumped over the edge **108** and along the chute **110** into the underlying drawer **32**.

The support plate **94** has a pair of upright pivot pins **112** which are located near the leading section **100** of the channel **98** and each on a respective side of the channel. A pair of clamping jaws **114** are hinged each on a respective pin **112** by means of a respective tail portion **116**. The jaws **114**, which are mirror images of each other, are symmetrically disposed with respect to the longitudinal axis of the channel **98**. Each jaw **114** has a flat lower surface **118** (FIG. **4**) which slidably rests on the respective portion of the flat surface **96** which lies on the respective side of the channel **98**.

The clamping jaws **114** have respective concave surfaces **120** which are substantially semi-circular. A respective hairpin spring **122** is associated to each jaw **114** and has a coiled portion **124** around the pivot pin **112** and straight end portions or whiskers **126**, **128**. The end portion **126** resiliently bears against a fixed abutment which is constituted by the inner surface of the front wall **12** and the other end portion **128** resiliently bears against an outer surface **130** of the respective jaw **114**.

The two jaws **114** are biassed towards each other by the springs **122**, i.e. to the closed position FIGS. **5** and **6**. In the closed position of the jaws **114**, the two concave surfaces **120** define a cylindrical seat which constitutes the brewing station proper **102** and which is concentrical to the axis of the outlet passage **104**. The diameter of the seat closely corresponds to the outer diameter of the cartridges to be used in the machine.

The tail portions **116** of the jaws **114** have respective bevelled cam surfaces **132** which are turned towards the leading section **100** of the channel **98**. When the jaws **114** are in the closed position, the cam surfaces **132** define a V-shaped mouth which communicates with the brewing station **102** through a gap **134**.

Sensing means in the form of a microswitch **136** are associated to one of the jaws **114** (the right jaw in FIGS. **5** to **7**) to sense the spread apart condition of the jaws (FIG. **7**).

Other details of the brewing machine will appear in the course of the description which follows of its operation.

Referring to FIGS. **5** and **6**, when a user wishes to obtain a beverage, he places a container T, for example,

a plastics disposable cup, onto the bottom wall **30** of the receptacle **28**. Then the user opens the flap **18** and places a new cartridge to be used onto the leading section **100** of the channel **98**, through the window **16**. The new cartridge in this position is shown in FIGS. **5** and **6** and is indicated by C1.

Then the user closes the flap **18** as indicated by the arrow A1 in FIG. **6**. The projection **24**, which acts as a pusher member, engages the sidewall of the cartridge C1 and pushes the latter against the cam surfaces **132**.

The cartridge C1, under the thrust of the pusher member **24**, slides along the channel **98** in the direction of the arrow A2, this movement being guided by the sidewalls of the channel **98**.

The cartridge C1 exerts a camming action on the cam surfaces **132**, spreads the jaws **114** apart to the position of FIG. **7** and opens the entrance gap **134**.

The length of the pusher member **24** is such that, when the flap **18** reaches the fully closed position of FIGS. **1** and **8**, the cartridge C1 is exactly located in the brewing station **102**. In this condition the jaws **114** are closed under the bias of the springs **122** and their concave surfaces **120** closely embrace the sidewall of the cartridge C1.

Usually a used or old cartridge C2 has been left in the brewing station **102** from a preceding brewing cycle, as shown in FIG. **6**. The new cartridge C1 pushes the old cartridge C2 away from the brewing station **102** in the direction of the arrow A2. The old cartridge C2 is thus slid over the trailing edge **108** and along the chute **110** and is dropped into the drawer **32**, as shown in FIG. **3**.

The spreading apart of the jaws **114**, when a new cartridge C1 comes to the brewing station **102**, is sensed by the microswitch **136** which starts the operation of a timer control unit **138**, shown in FIG. **4**.

Reference will be made now specifically to FIG. **4**. After a short delay to make sure that the new cartridge C1 is correctly located and clamped by the jaws **114** in the brewing station **102**, the timer control unit **138** starts the water pump **48** and opens the three-way solenoid valve **50** to the conduit **52**. Water under high pressure (about 8 to 9 bars) is thus flowed from the tank **38** to the labyrinth **66** of the heating plate **56** and then through the passage **68** to the upper side of the piston **64**. The water which flows in the labyrinth **66** is heated to a rather high temperature (about 80° to 90° C.). The water pressure on the piston **72** thrusts the latter downwardly. The check valve **88** is so calibrated to block the passage **82** during the descent of the piston **72**.

The downward movement of the piston **72**, which takes place against the bias of the spring **92**, lowers the presser plate **78** until the latter comes to a lowered position in which it bears firmly on the upper face of the cartridge C1, or better on its upper sealing rim UR (FIG. **1**). At the same time, the lower face of the cartridge C1, or better its lower sealing rim LR (FIG. **1**), is tightly pressed against the bottom surface of the channel **98** in the brewing station **102** and around the entrance of the passage **104**.

When the piston **72** and the presser plate **78** have come to a stop in the lowered position, the water pressure on the piston **64** abruptly increases and opens the check valve **88**. Thus a water flow rushes into the cartridge C1 through the orifice **84** and the brewing of the product in the cartridge takes place. The beverage so obtained is forced from the lower face of the cartridge through the passage **104** and is dispensed into the container T.

After a predetermined time, corresponding to the dispensing of a predetermined amount of beverage into the container, the control unit **138** operates the three-way solenoid valve **50** to block the feed conduit **52** and to put the outlet of the pump **48** into communication with the pipe fitting **44** through which the residual water flow is sent back to the tank **38**. In this manner, the water inflow to the brewing unit **54** is abruptly stopped, thus avoiding any further dripping from the nozzle **106**.

Then the control unit **138** stops the pump **48**. Meanwhile the water pressure has dropped above the piston **72**, the check valve **88** has blocked the passage **82** and the piston **72** and the presser plate **78** have returned to the raised position of FIG. **3**.

When brewing takes place, the cartridge C1 is submitted to very high mechanical compression forces between the presser plate **78** and the bottom of the channel **98**. The clamping jaws **114**, which tightly embrace the cartridge, prevent outward bulging of its sidewall, since bulging would lead to a loss of the pressure-tight seal on the upper and lower faces of the cartridge. To further prevent bulging or even crushing of the cartridge, the presser plate **78** has a pair of depending prongs **140**. As shown in FIG. **4**, when the presser plate **78** is in the lowered condition, the prongs **140** straddle the jaws **114** and firmly engage their outer surfaces **130**, thus positively preventing the spreading apart of the jaws.

Means can be provided to manually stop the breawing cycle when a desired amount of beverage has been dispensed. This may happen if the user wishes to have a more concentrated beverage. To this purpose the push-button switch **26** (FIG. **2**) may be used to stop the timing cycle of the control unit **138** before the end of the cycle. Also in this case the sequence of events which follow the blocking of the feed conduit **52** is the same as described above.

Referring again to FIG. **4**, the water tank **38** may be provided with sensing means **142** in the form of a pair of electrodes near the bottom of the tank **38**. When the water level in the tank **38** lowers below the sensing means **142**, the current flow across the electrodes can no longer take place and this may be used to prevent the operation of the control unit **138**. The low water level may also cause the warning lamp in the push-button switch **26** to extinguish, thus indicating that the tank **38** must be refilled.

I claim:

1. A beverage extracting and dispensing machine for use with cartridges having an imperforate substantially cylindrical sidewall and upper and lower permeable substantially flat walls and containing a brewable product from which a beverage can be obtained by flowing hot water under pressure therethrough, said machine including:

a lower support defining a sliding horizontal path on which the cartridge is adapted to rest and to slide with its lower wall, said sliding path having a leading section adapted to receive a new cartridge to be used, an intermediate brewing station and a trailing edge over which an old cartridge may be dumped after use,

an upper presser plate movable to and from said sliding path above said brewing station, said presser plate, when in a lowered position, being adapted to tightly engage the upper wall of a cartridge in the brewing station, and when in a raised position being disen-

gaged from the cartridge, said presser plate having an inlet passage therethrough which opens to the upper permeable wall of the cartridge in the brewing station;

means for lowering the presser plate into engagement with the cartridge in the brewing station,

means for forcing hot water under pressure through said inlet passage and through said cartridge in the brewing station,

a filling station underlying said support and adapted to receive a container for the beverage, said support having a lower outlet nozzle which communicates with the brewing station through an outlet passage in the support to fill the container in the filling station with the beverage flowing from the lower wall of a cartridge in the brewing station,

a pair of movable clamping jaws mounted on said support, one on each side of said sliding path, said clamping jaws having respective concave surfaces adapted to closely embrace the sidewall of a cartridge in the brewing station, and respective bevelled cam surfaces turned towards said leading section of the sliding path and defining therebetween an entrance gap leading to the brewing station, said jaws being resiliently biassed towards each other to a cartridge clamping position and being adapted to be spread apart by the co-operation of the sidewall of a new cartridge with the bevelled cam surfaces when the cartridge is pushed from said leading section to the brewing station through the entrance gap, and said jaws, when spread apart, being adapted to allow an old cartridge to be pushed away from the brewing station and to be dumped over the trailing edge under the thrust of the new cartridge which is pushed to the brewing station,

control means operable to control a brewing cycle which includes the successive steps of lowering said presser plate to the lowered position and onto the cartridge in the brewing station, forcing a predetermined amount of hot water under pressure through said cartridge and dispensing a corresponding amount of beverage from said nozzle, and allowing said presser plate to return to the raised position,

and sensing means to sense the spread apart condition of said jaws for starting the operation of said control means to accomplish the brewing cycle.

2. A machine as claimed in claim **1**, wherein each clamping jaw is hinged on the said support about a respective vertical pivot pin which is located on a respective side of the sliding path and near the leading section of said path.

3. A machine as claimed in claim **2**, wherein each of said clamping jaws has associated therewith a hairpin spring, the hairpin springs biassing the jaws towards each other, each hairpin spring having a coiled portion around the pivot pin of the respective jaw and two end portions which are in engagement with the jaw and with a fixed abutment, respectively.

4. A machine as claimed in claim **2**, wherein the presser plate has a pair of downwardly projecting prongs which, when the presser plate is in the lowered position, straddle the jaws and are each in engagement with a respective jaw on its side remote from said sliding path to positively prevent the jaws from spreading apart.

5. A machine as claimed in claim **1**, wherein said support is a support plate having an upper flat face with a shallow channel therealong which constitutes said sliding path, the width of the channel corresponding to the diameter of the cartridges, and the jaws having lower surfaces which are slidable on respective flat face portions which lie on respective sides of the channel.

6. A machine as claimed in claim **1**, wherein the leading section of the sliding path has associated therewith a manually operable pusher member which is movable towards the entrace gap between the jaws to push the cartridge to the brewing station.

7. A machine as claimed in claim **6**, wherein the leading section of the sliding path has associated therewith a lever arm an end of which is hinged about a vertical axis on one side of the leading section of the slide path, the other end of the lever arm being in the form of a handgrip and the lever arm having, between its ends, a projection directed towards the entrance gap and constituting said pusher member.

8. A machine as claimed in claim **7**, wherein the machine has a cabinet with a front wall which is perpendicular to said sliding path, said front wall having an access window to said leading section of the sliding path, through which window a new cartridge may be placed onto the leading section, and wherein said lever arm constitutes a closure flap for said window, the arrangement being such that the cartridge placed on the leading section is pushed to the brewing station by the pusher member when the flap is moved to the closed position.

* * * * *