US 20150289709A1

(19) United States
(12) Patent Application Publication
Picozza et al.
(10) Pub. No.: US 2015/0289709 A1
(43) Pub. Date: Oct. 15, 2015

(54) **HOT BEVERAGE BREWER FOR MULTIPLE VOLUMES**

(71) Applicant: **Sunbeam Products, Inc.**, Boca Raton, FL (US)

(72) Inventors: **Augusto A. Picozza**, Boca Raton, FL (US); **Aaron Abroff**, Acton, MA (US); **Gary McGonagle**, Lynn, MA (US); **Dov Glucksman**, Danvers, MA (US); **Laura Nickerson**, Fitchburg, MA (US)

(73) Assignee: **SUNBEAM PRODUCTS, INC.**, Boca Raton, FL (US)

(21) Appl. No.: **14/687,484**

(22) Filed: **Apr. 15, 2015**

Related U.S. Application Data

(60) Provisional application No. 61/979,602, filed on Apr. 15, 2014.

Publication Classification

(51) **Int. Cl.**
A47J 31/44 (2006.01)
A47J 31/40 (2006.01)
A47J 31/46 (2006.01)

(52) **U.S. Cl.**
CPC *A47J 31/4482* (2013.01); *A47J 31/46* (2013.01); *A47J 31/407* (2013.01)

(57) **ABSTRACT**

Systems (**100**) and methods (**2800**) for operating a hot beverage brewer. The methods include receiving a brew basket of a plurality of interchangeable brew baskets (**900**, **1400**, **1800**) within a basket chamber (**402**) of the hot beverage brewer. At least two of the plurality of interchangeable brew baskets are of different brew basket types and designed to hold different amounts of a beverage substance. Thereafter, the hot beverage brewer: automatically detects the brew basket type associated with the brew basket residing within the basket chamber; selects first operations from a plurality of operations that should be performed by the hot beverage brewer based on the brew basket type which was previously detected; and performs the first operations by the hot beverage brewer.

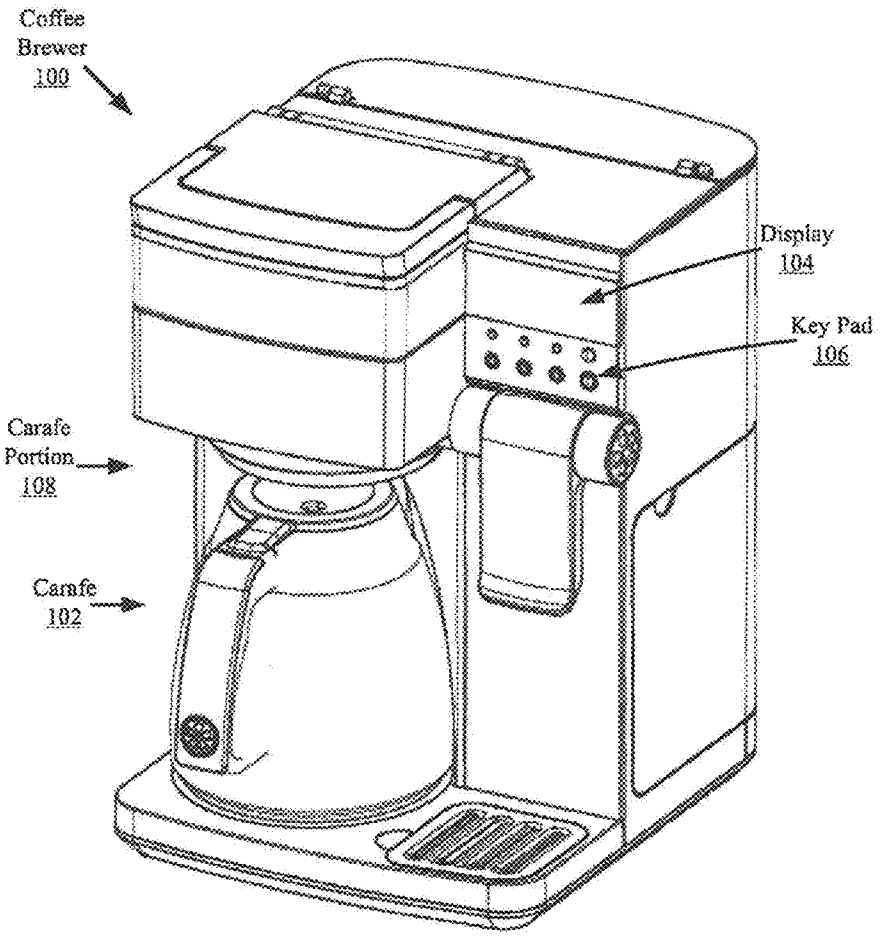

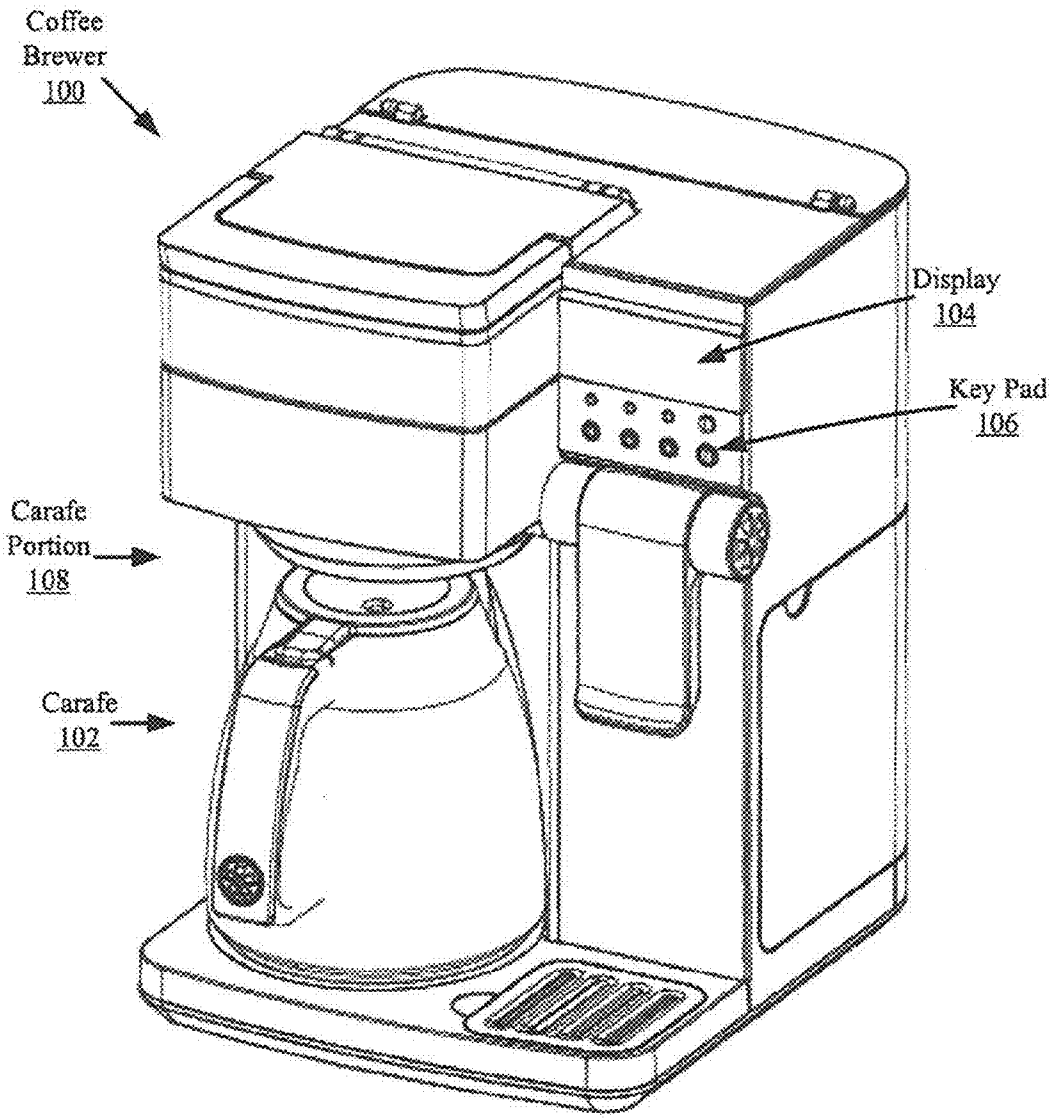
Coffee
Brewer
100
Display
104
Key Pad
106
Carafe
Portion
108
Carafe
102

FIG. 1

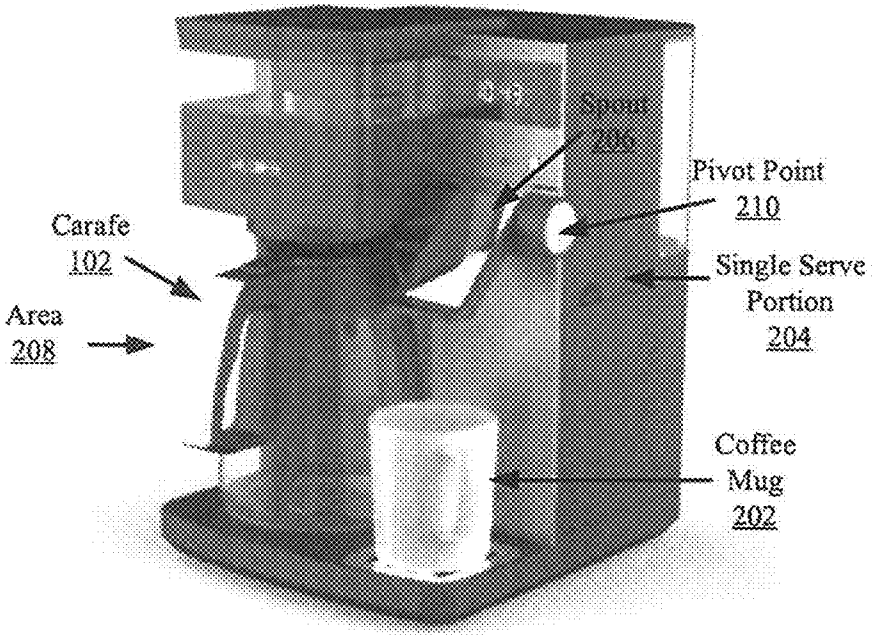
Spout
206
Pivot Point
210
Carafe
102
Single Serve
Portion
204
Area
208
Coffee
Mug
202

FIG. 2

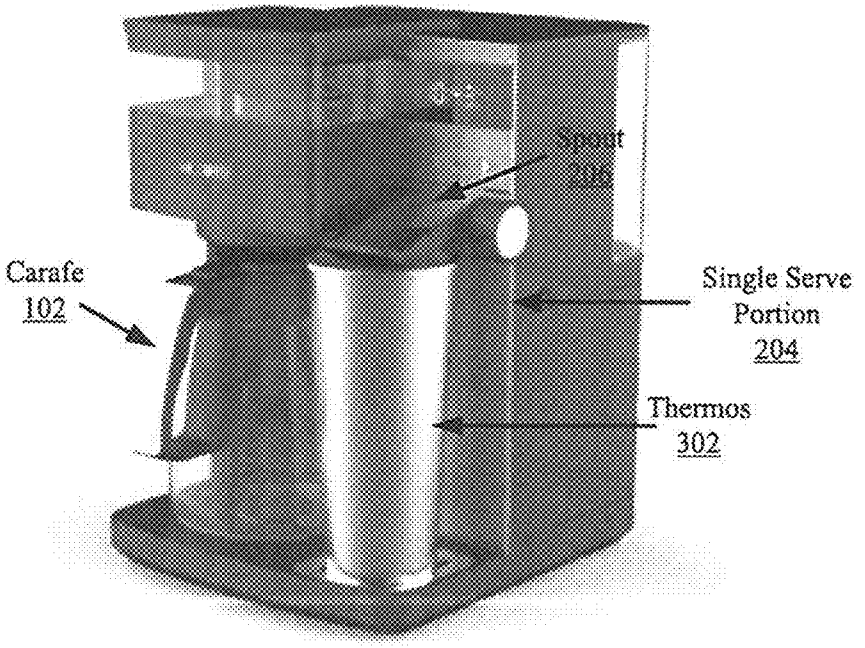
Spout
206
Carafe
102
Single Serve
Portion
204
Thermos
302

FIG. 3

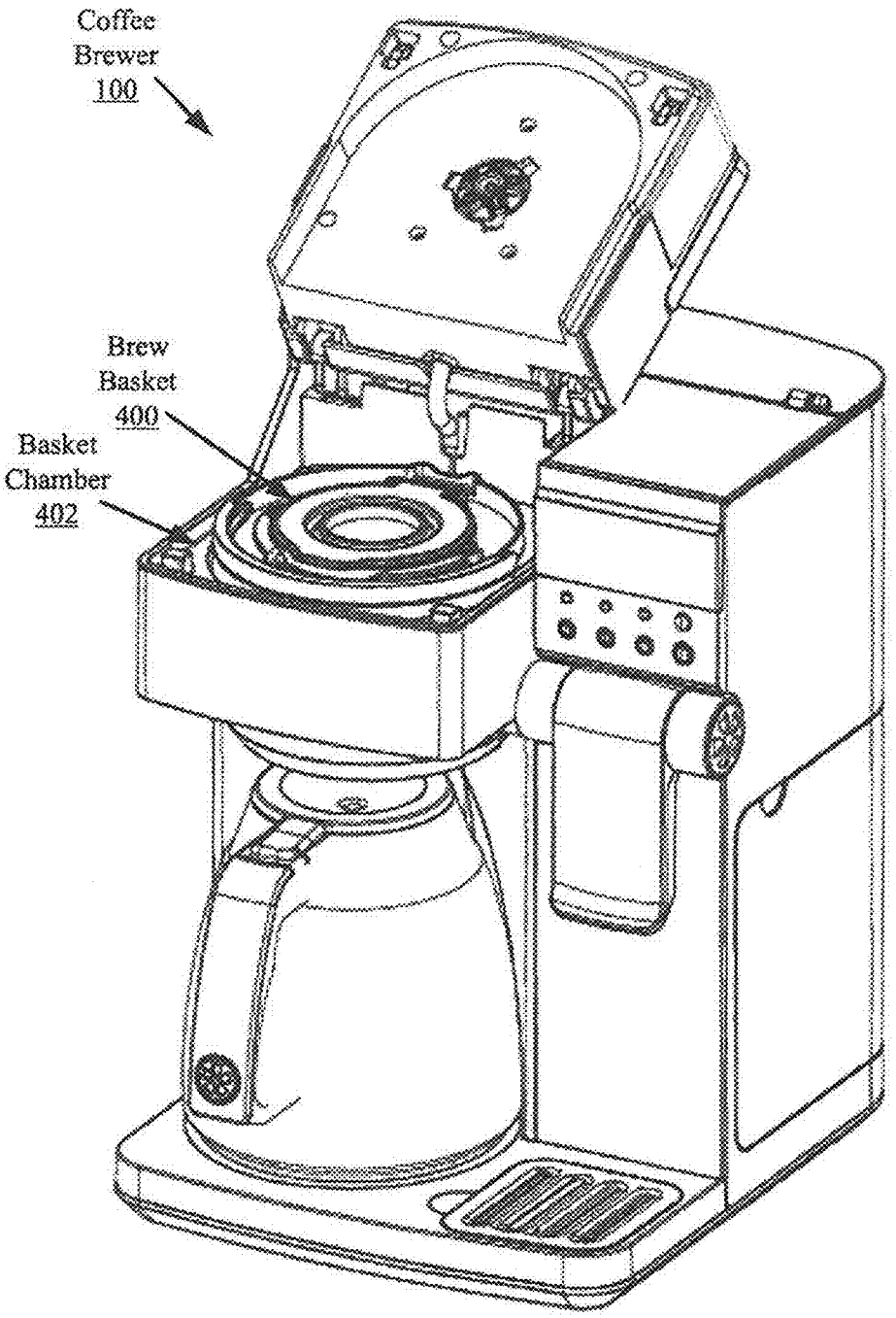

FIG. 4

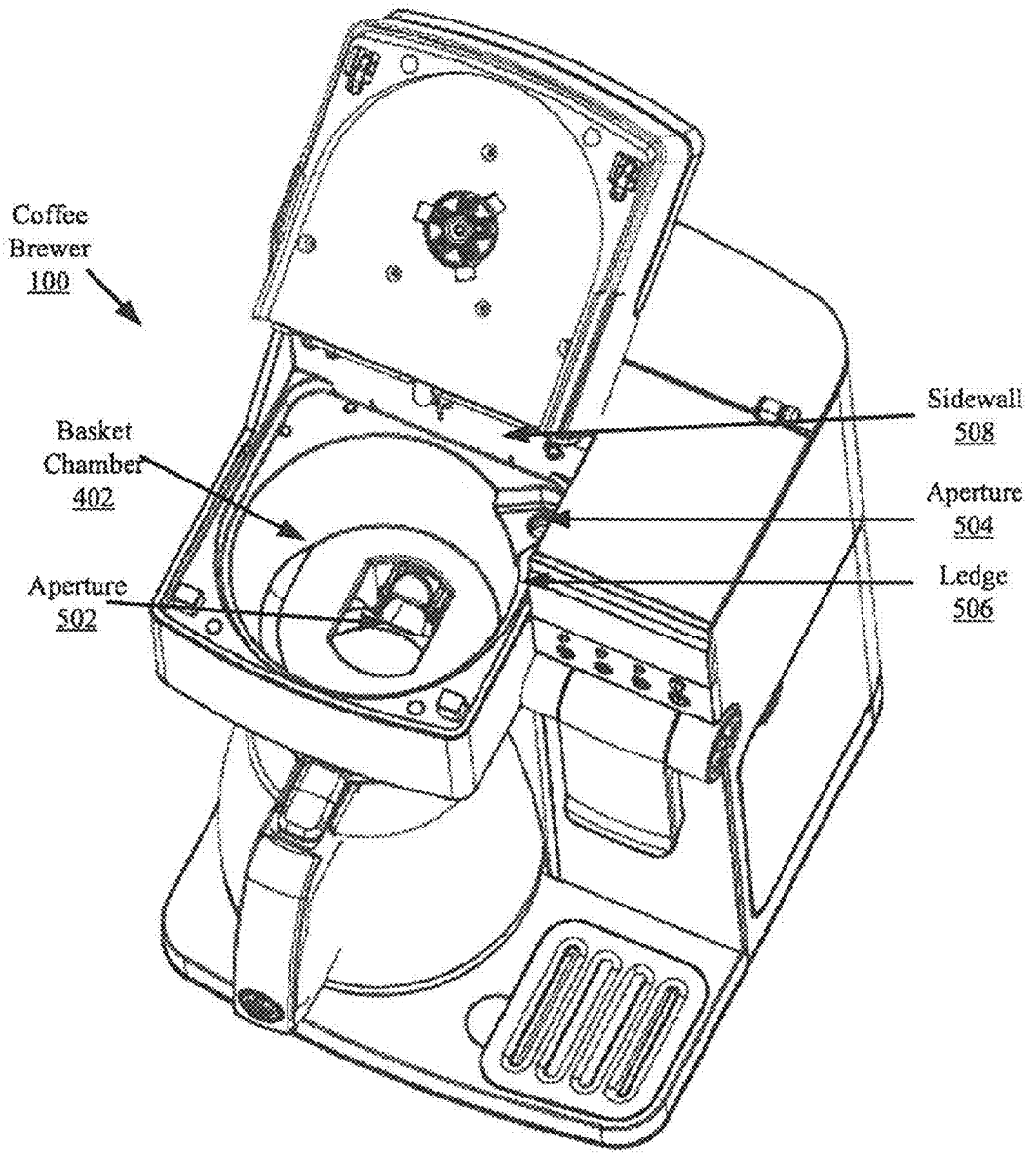
Coffee
Brewer
100
Basket
Chamber
402
Aperture
502
Sidewall
508
Aperture
504
Ledge
506

FIG. 5

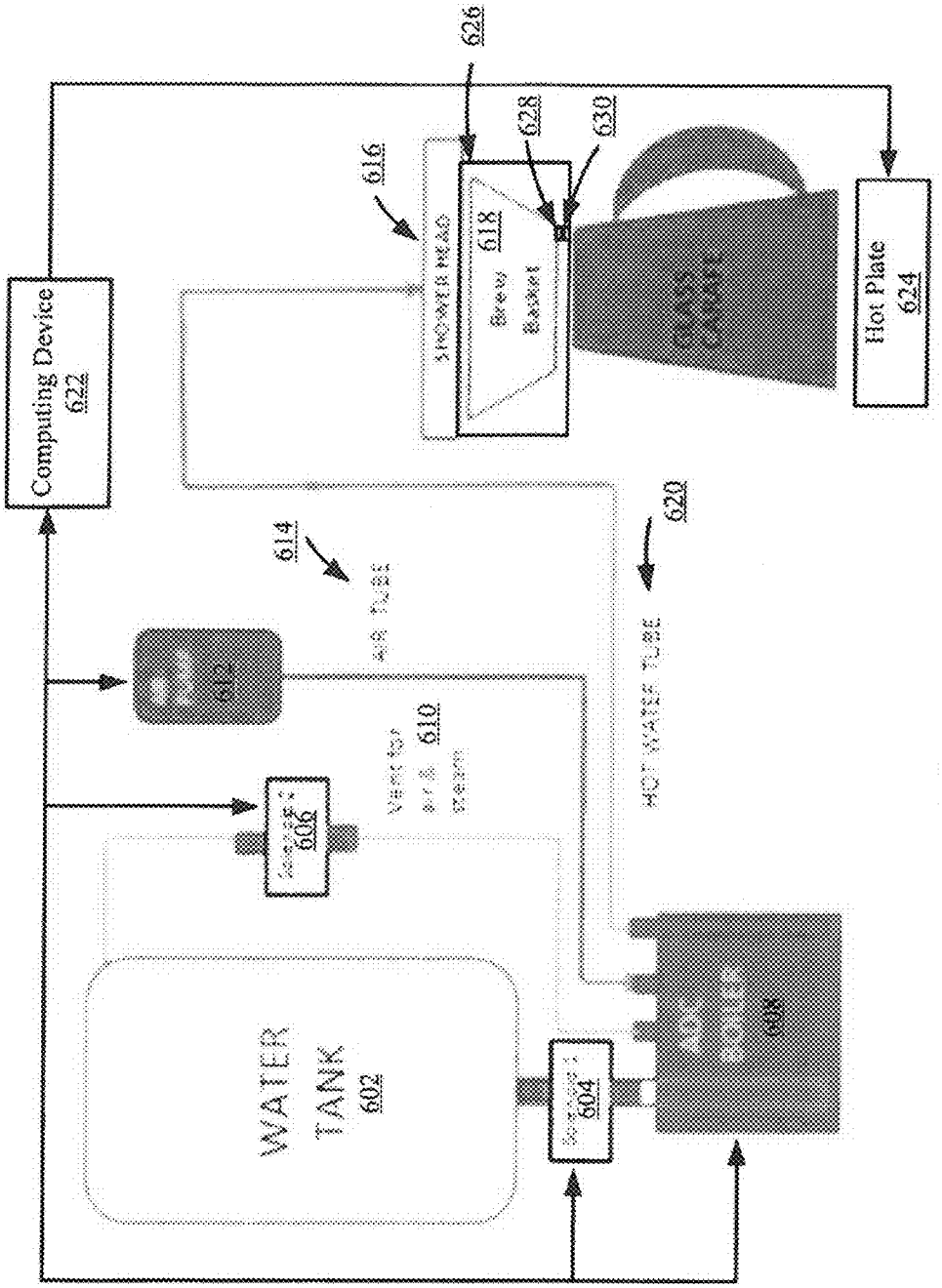
Computing Device
622
626
616
628
630
618
Brew
Basket
Hot Plate
624
614
AIR TUBE
620
HOT WATER TUBE
610
606
WATER
TANK
602
604

FIG. 6

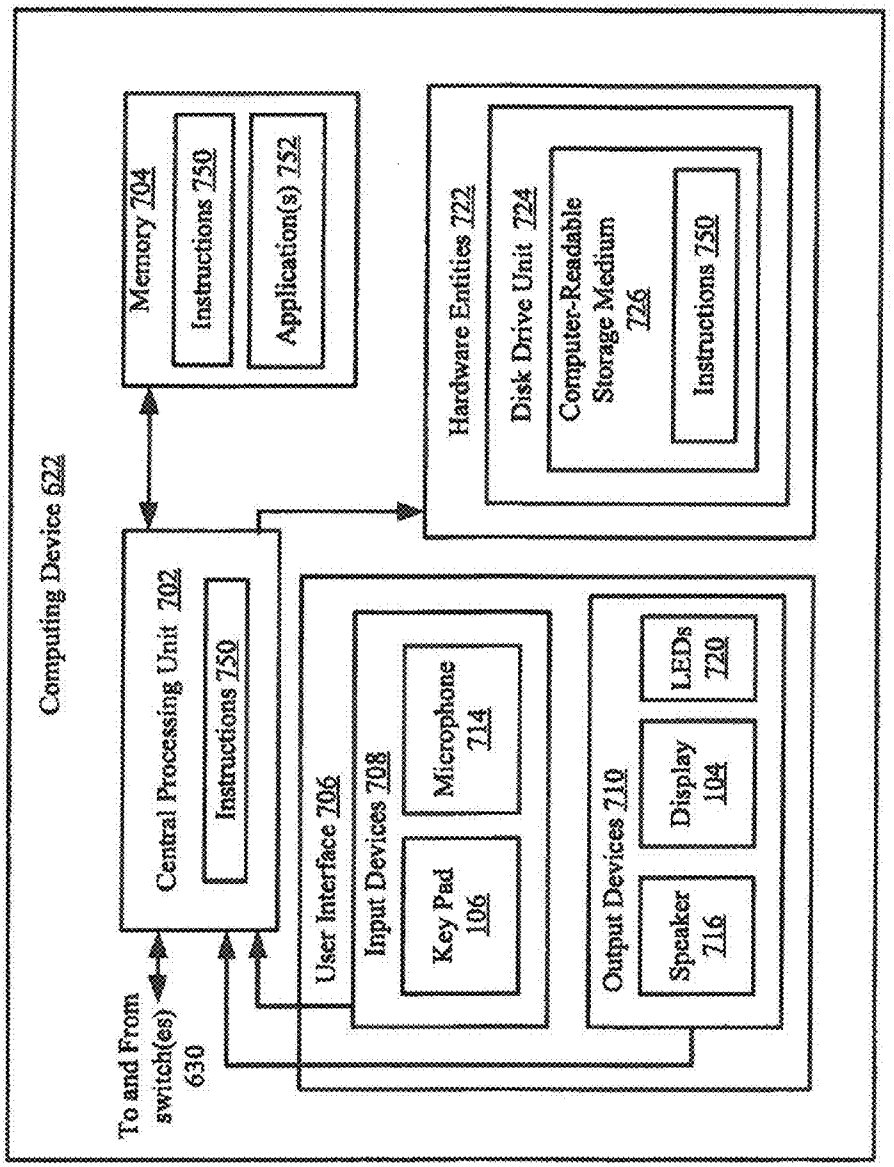
Computing Device 622
Memory 704
Instructions 750
Application(s) 752
Hardware Entities 722
Disk Drive Unit 724
Computer-Readable Storage Medium 726
Instructions 750
Central Processing Unit 702
Instructions 750
To and From switch(es) 630
User Interface 706
Input Devices 708
Key Pad 106
Microphone 714
Output Devices 710
Speaker 716
Display 104
LEDs 720

FIG. 7

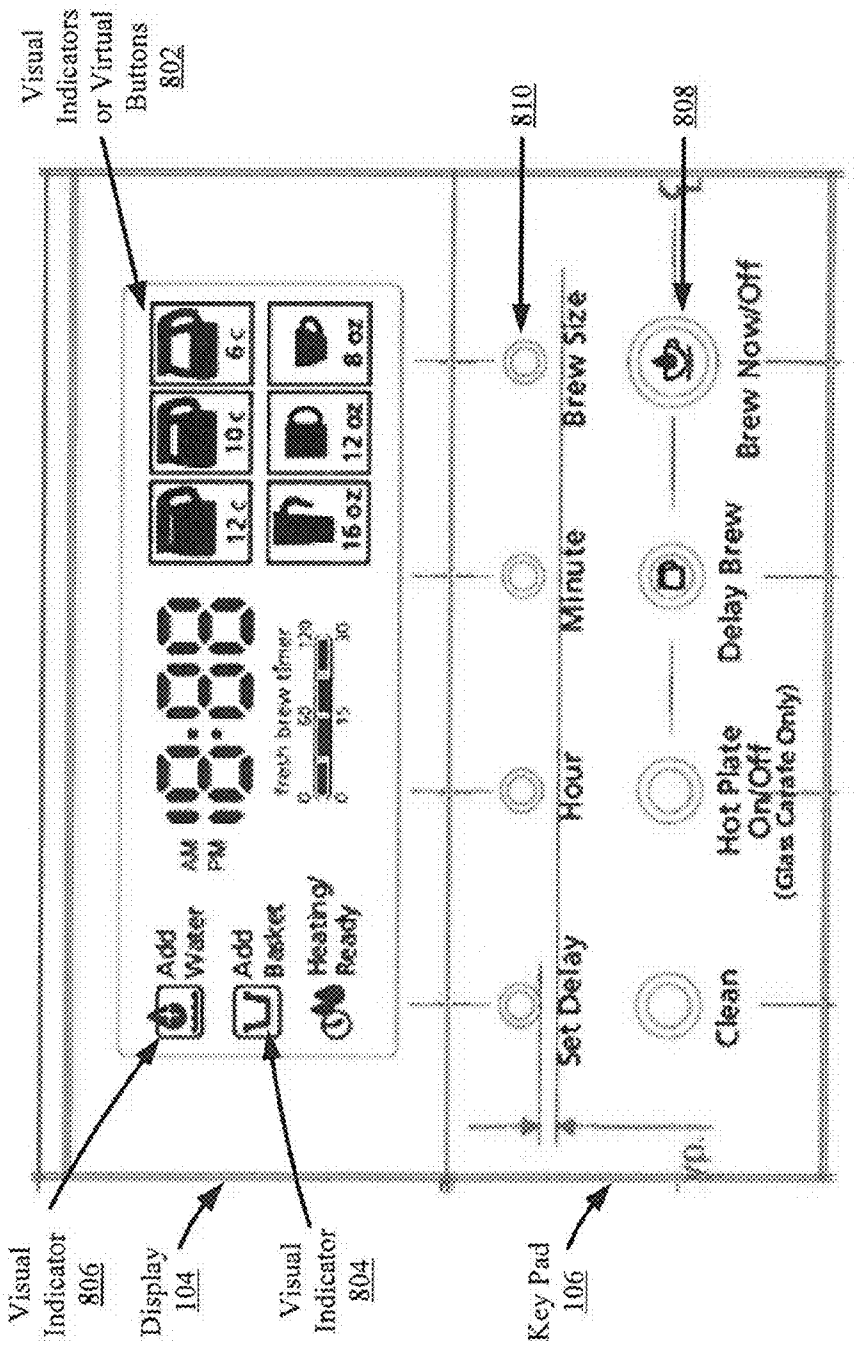
Visual Indicators or Virtual Buttons 802
810
808
Visual Indicator 806
Display 104
Visual Indicator 804
Key Pad 106
Add Water
Add Basket
Heating/ Ready
AM
PM
fresh brew timer
12 c
10 c
6 c
16 oz
12 oz
8 oz
Set Delay
Hour
Minute
Brew Size
Clean
Hot Plate On/Off (Glass Carafe Only)
Delay Brew
Brew Now/Off

FIG. 8

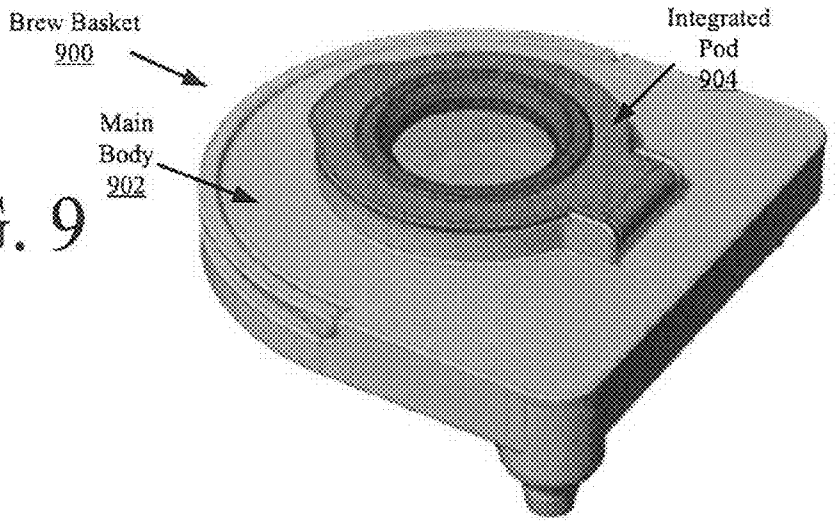
Brew Basket
900
Integrated
Pod
904
Main
Body
902

FIG. 9

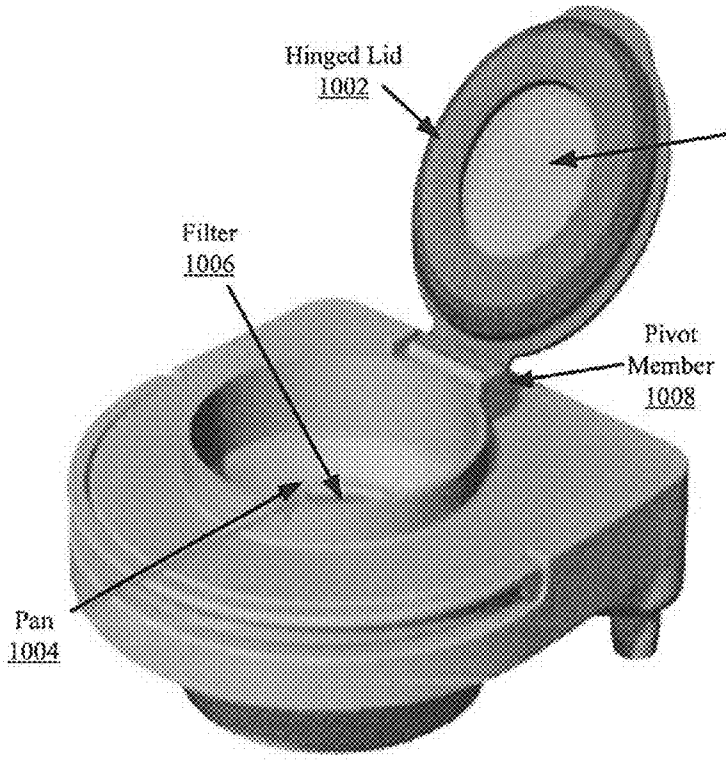
Hinged Lid
1002
Filter
1010
Filter
1006
Pivot
Member
1008
Pan
1004

FIG. 10

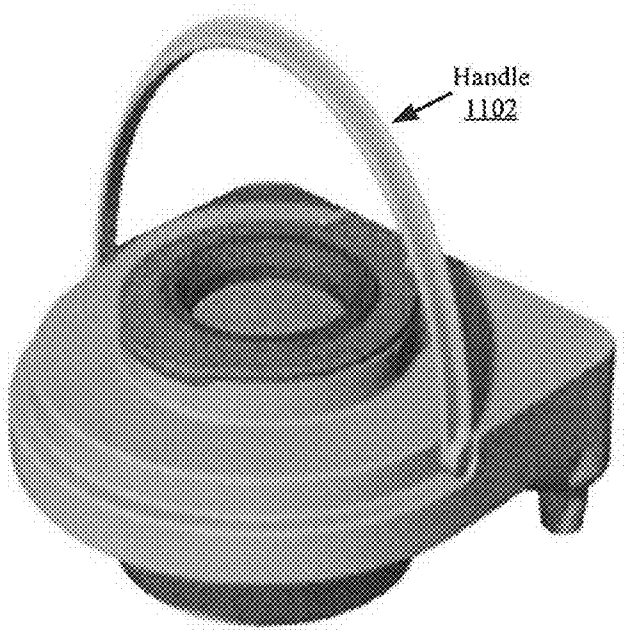
Handle
1102

FIG. 11

FIG. 12

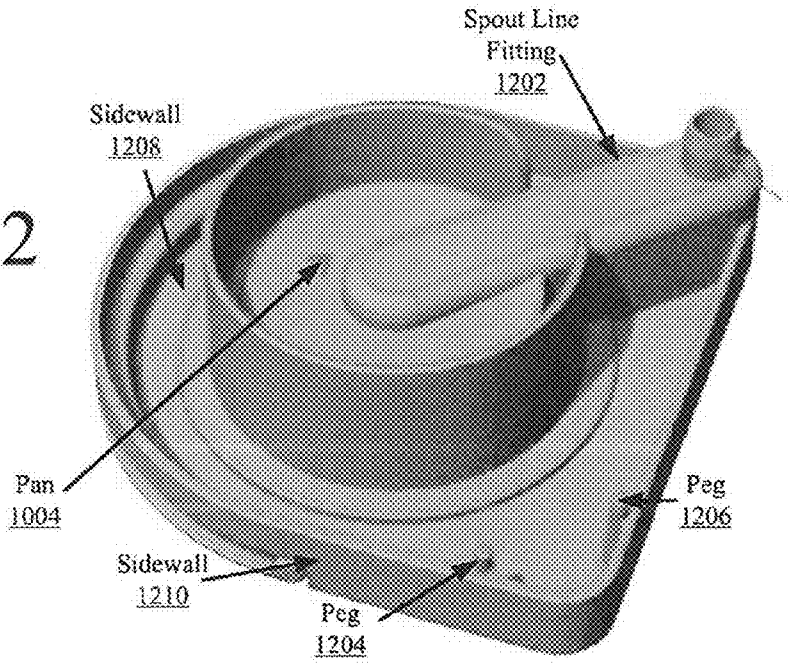
Spout Line
Fitting
1202
Sidewall
1208
Pan
1004
Peg
1206
Sidewall
1210
Peg
1204

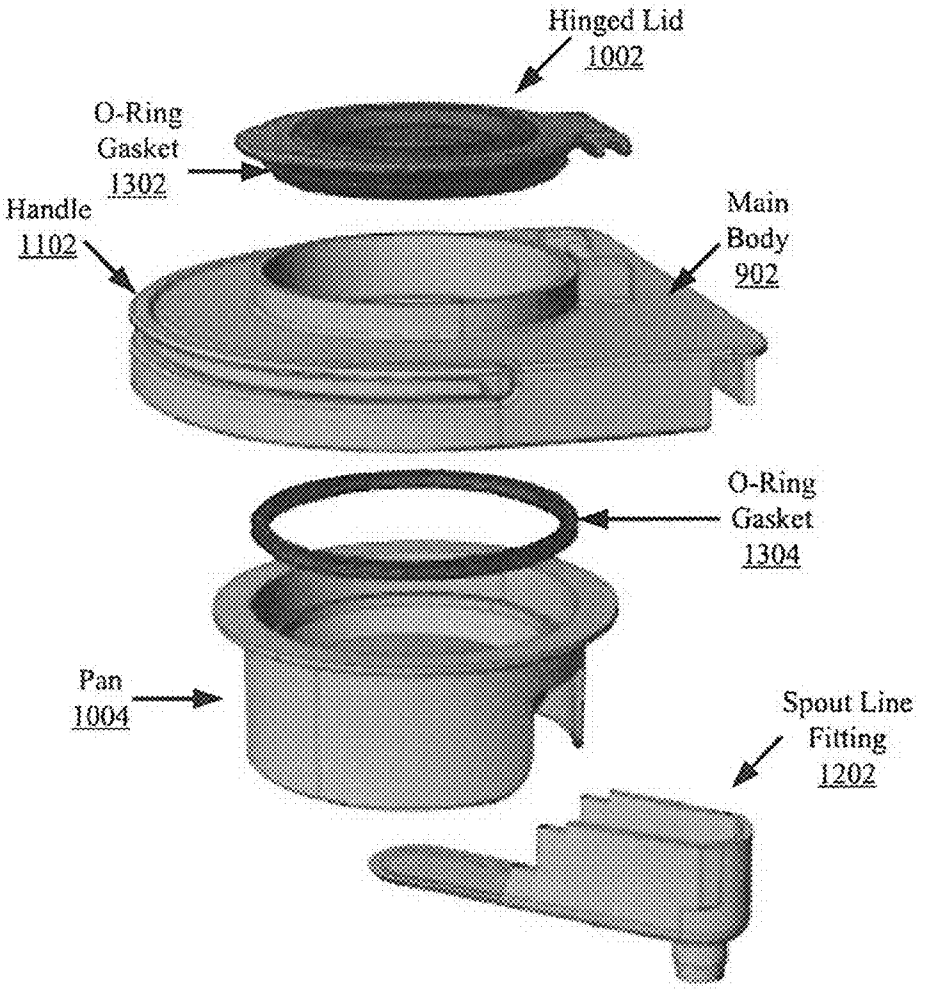
Hinged Lid
1002
O-Ring
Gasket
1302
Handle
1102
Main
Body
902
O-Ring
Gasket
1304
Pan
1004
Spout Line
Fitting
1202

FIG. 13

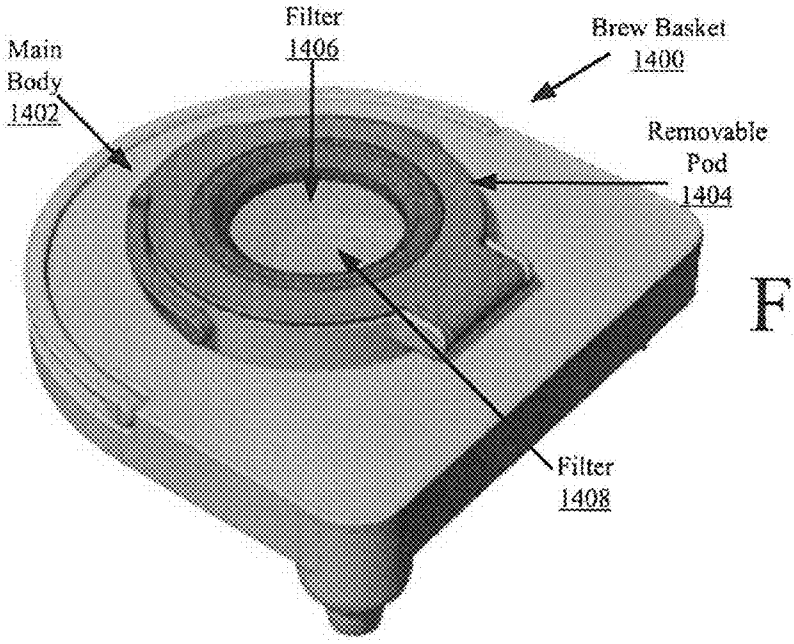
Filter
1406
Brew Basket
1400
Main
Body
1402
Removable
Pod
1404
Filter
1408

FIG. 14

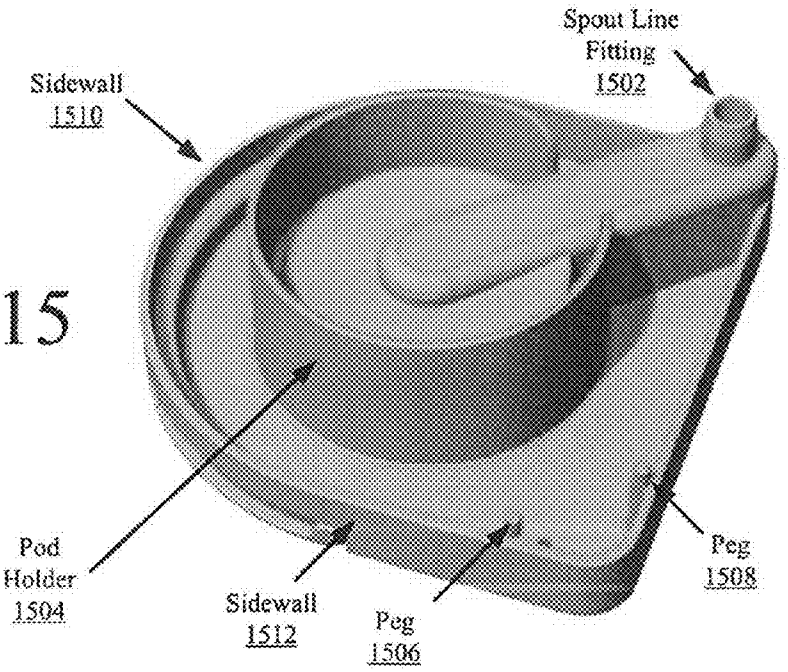
Spout Line
Fitting
1502
Sidewall
1510
Pod
Holder
1504
Sidewall
1512
Peg
1506
Peg
1508

FIG. 15

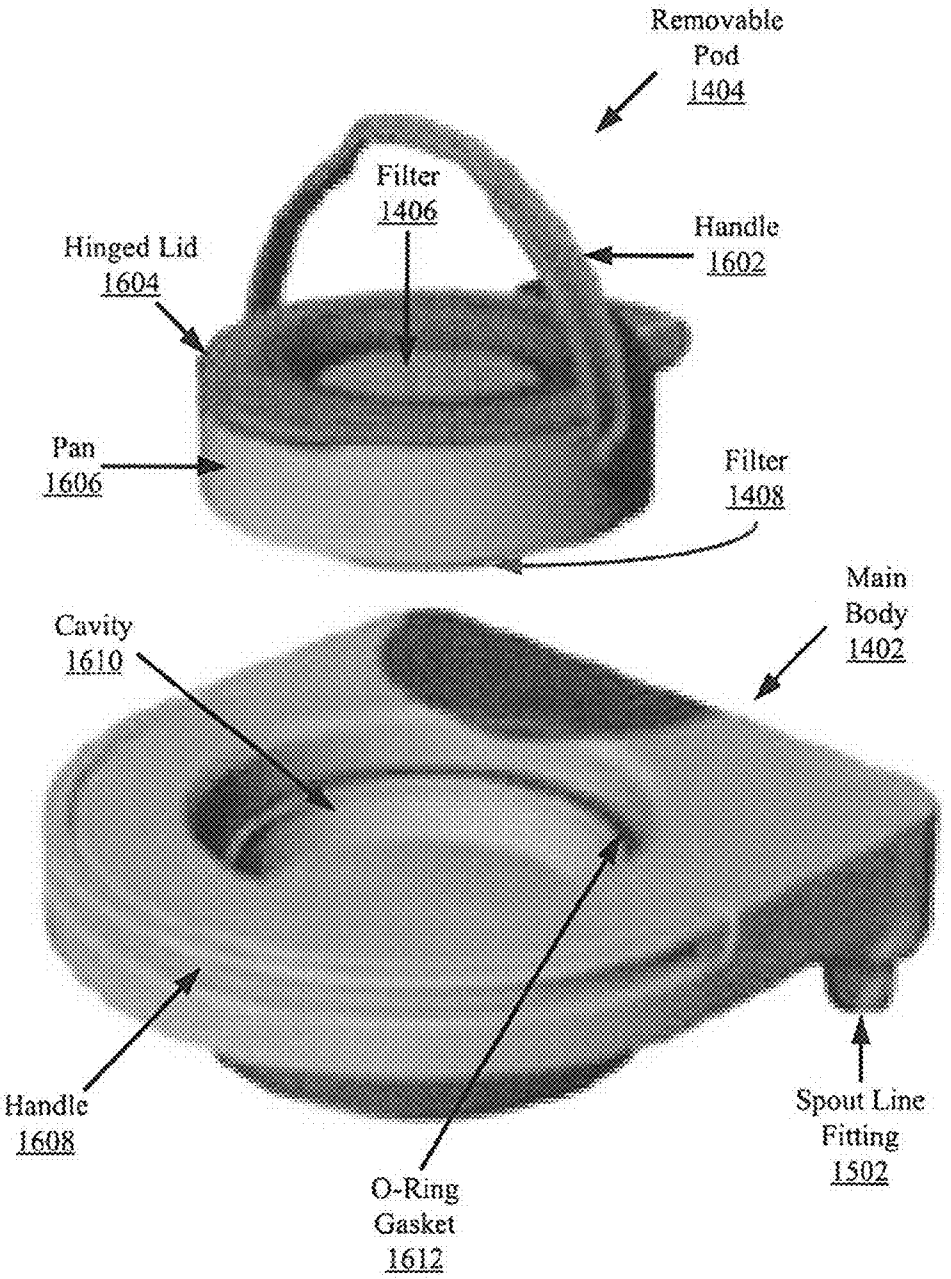
Removable
Pod
1404
Filter
1406
Handle
1602
Hinged Lid
1604
Pan
1606
Filter
1408
Main
Body
1402
Cavity
1610
Handle
1608
O-Ring
Gasket
1612
Spout Line
Fitting
1502

FIG. 16

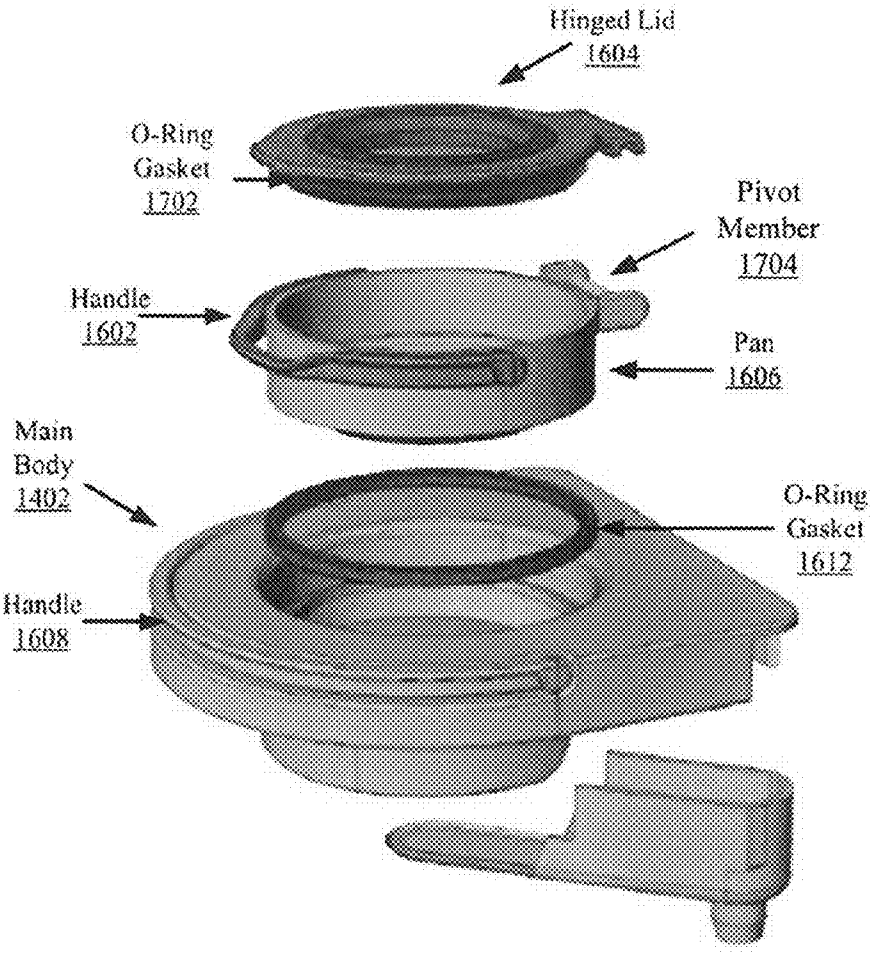
Hinged Lid
1604
O-Ring
Gasket
1702
Pivot
Member
1704
Handle
1602
Pan
1606
Main
Body
1402
O-Ring
Gasket
1612
Handle
1608

FIG. 17

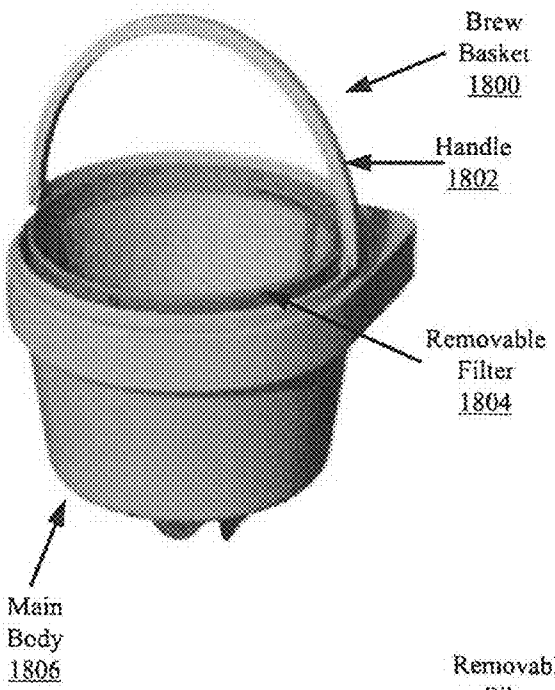
Brew
Basket
1800
Handle
1802
Removable
Filter
1804
Main
Body
1806

FIG. 18

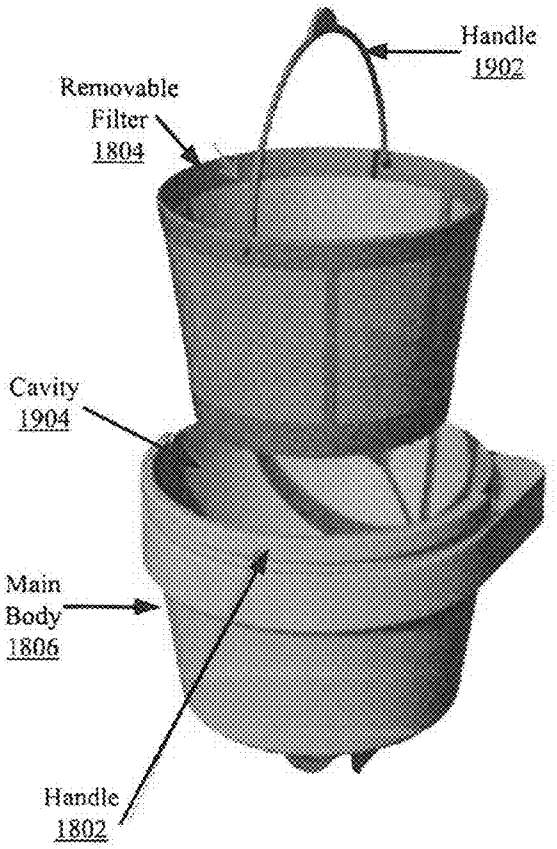
Handle
1902
Removable
Filter
1804
Cavity
1904
Main
Body
1806
Handle
1802

FIG. 19

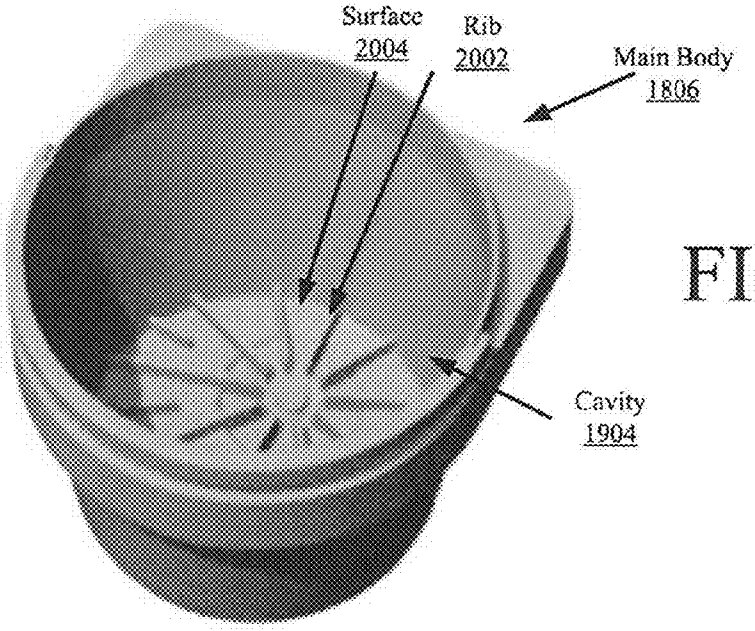
Surface
2004
Rib
2002
Main Body
1806
Cavity
1904

FIG. 20

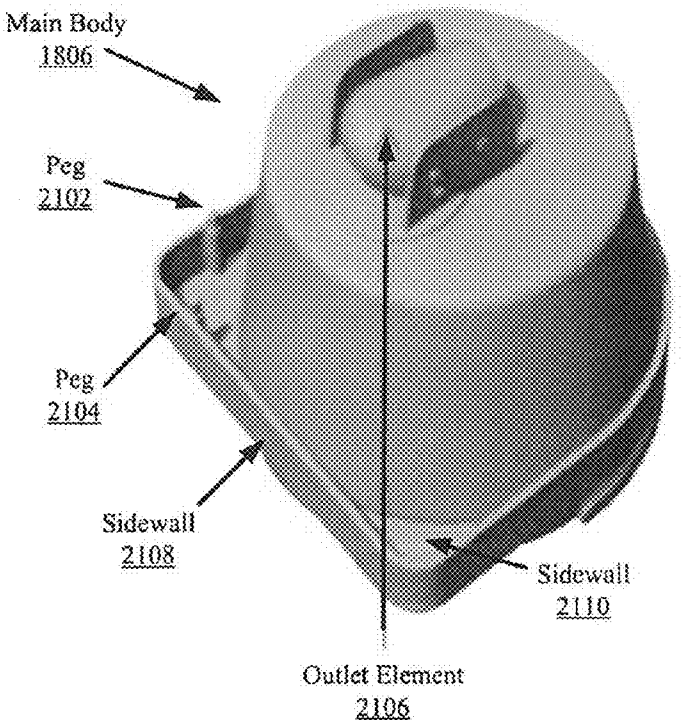
Main Body
1806
Peg
2102
Peg
2104
Sidewall
2108
Sidewall
2110
Outlet Element
2106

FIG. 21

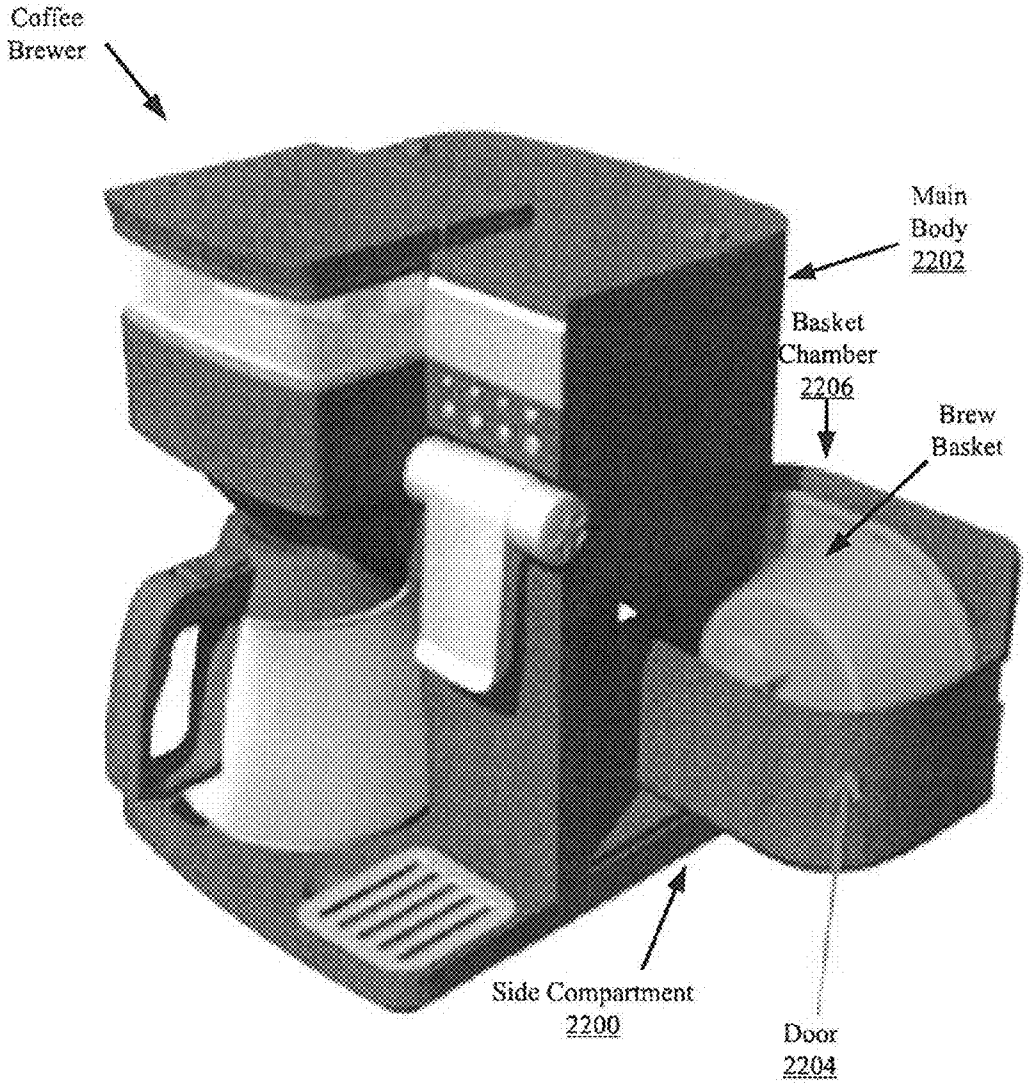
Coffee
Brewer
Main
Body
2202
Basket
Chamber
2206
Brew
Basket
Side Compartment
2200
Door
2204

FIG. 22

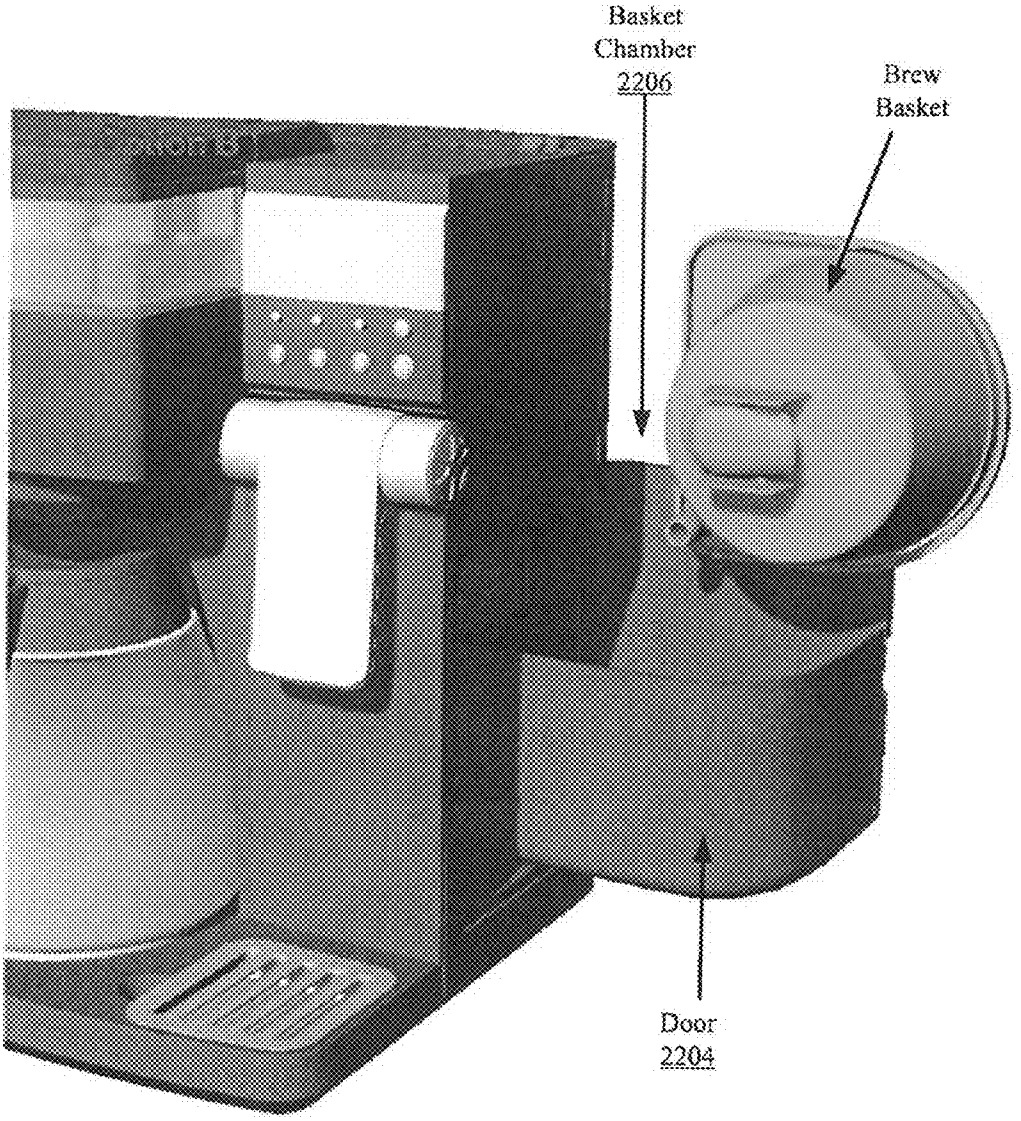

FIG. 23

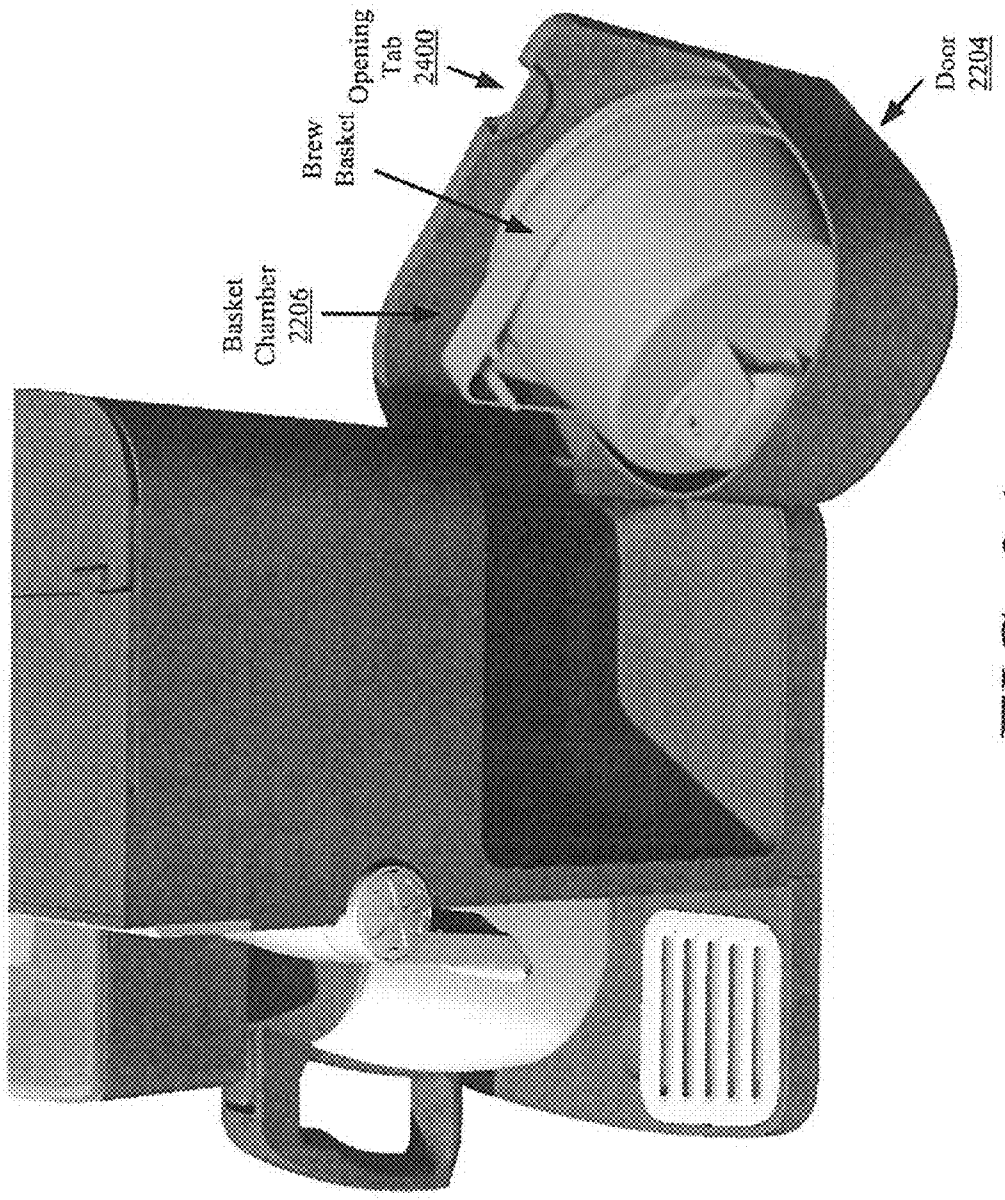

FIG. 24

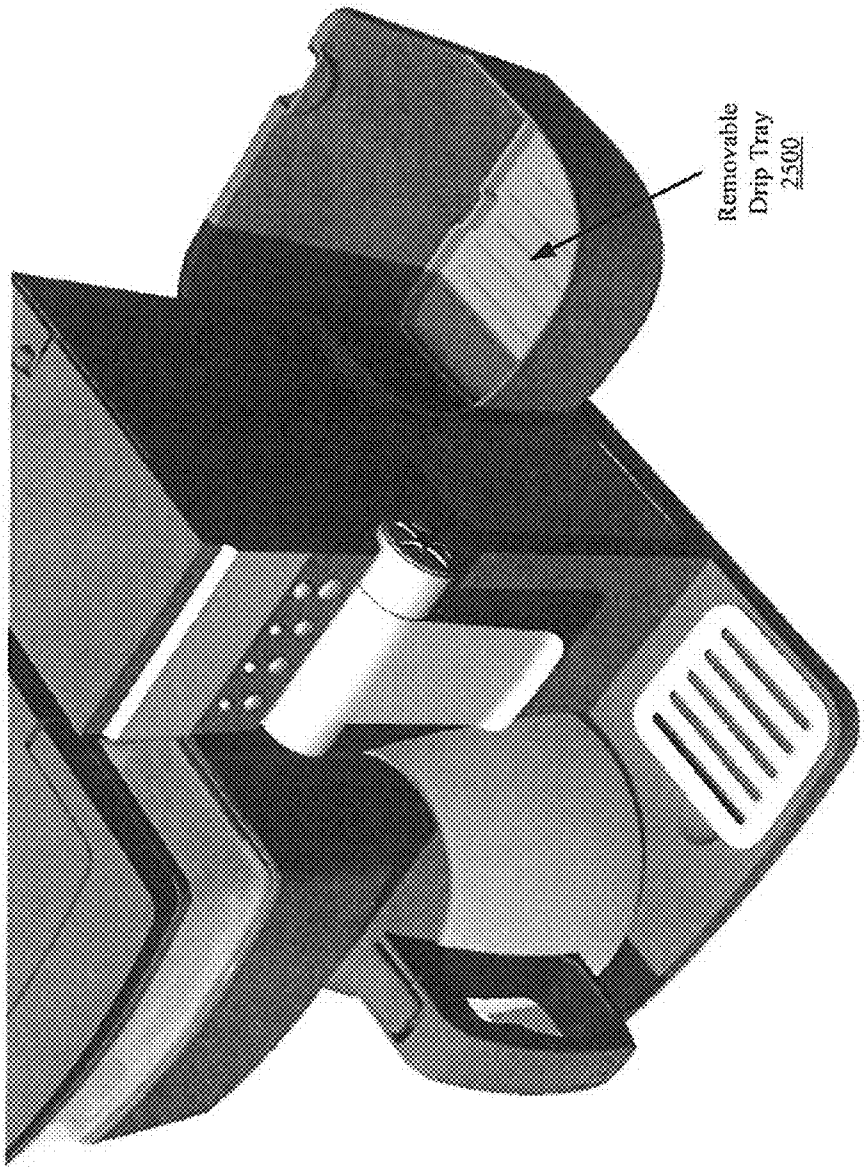

FIG. 25

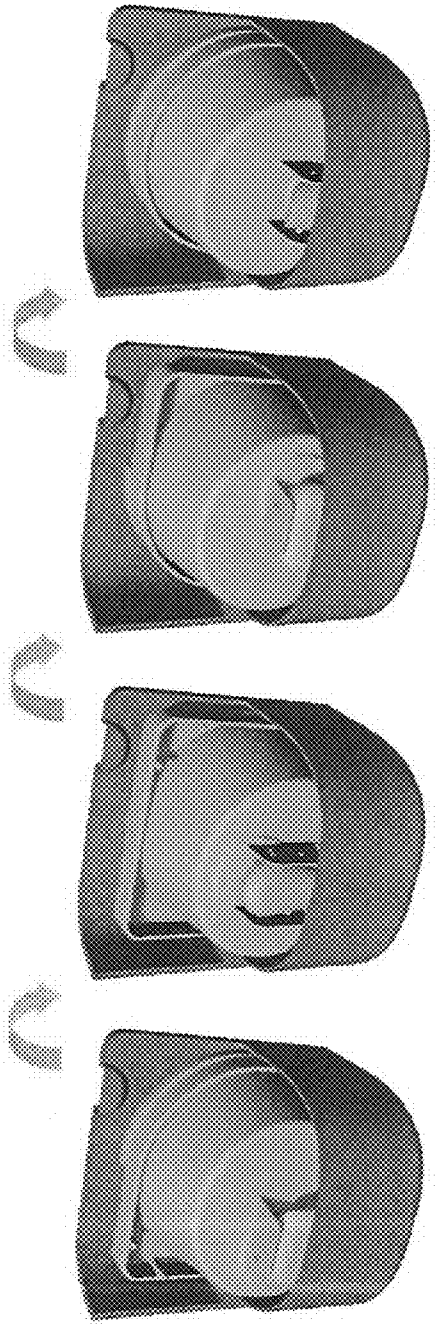

FIG. 26

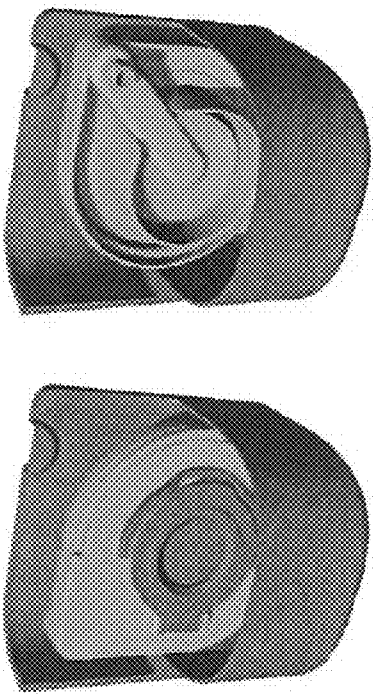

FIG. 27

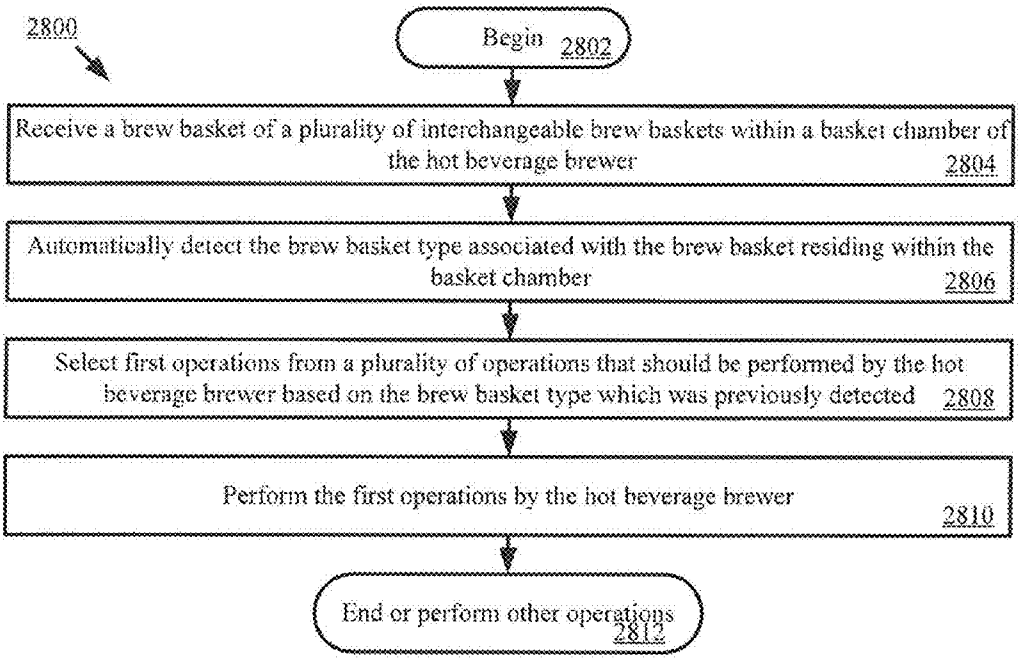
2800
Begin 2802
Receive a brew basket of a plurality of interchangeable brew baskets within a basket chamber of the hot beverage brewer 2804
Automatically detect the brew basket type associated with the brew basket residing within the basket chamber 2806
Select first operations from a plurality of operations that should be performed by the hot beverage brewer based on the brew basket type which was previously detected 2808
Perform the first operations by the hot beverage brewer 2810
End or perform other operations 2812

FIG. 28

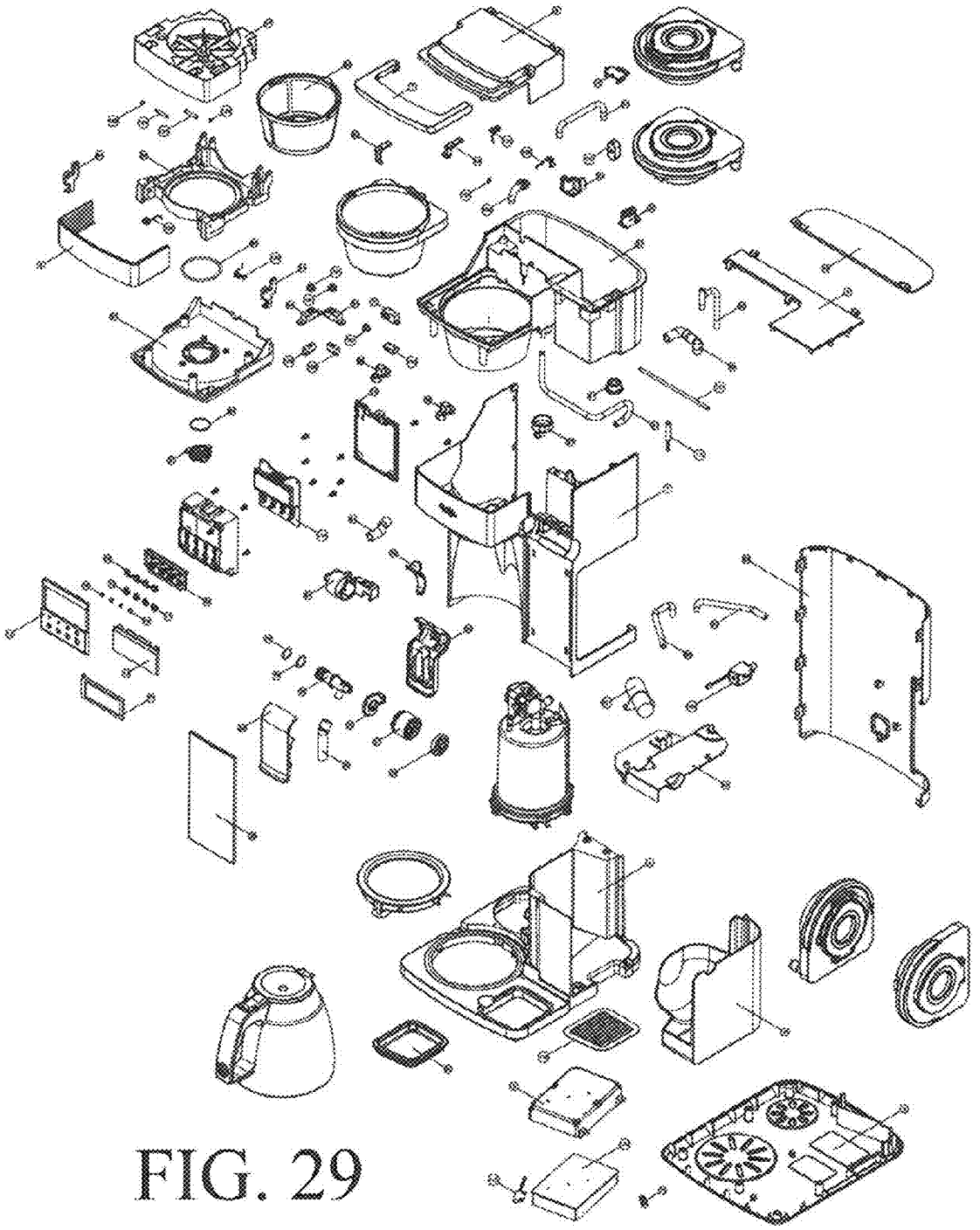

FIG. 29

HOT BEVERAGE BREWER FOR MULTIPLE VOLUMES

CROSS-REFERENCE TO RELATED APPLICATIONS

[0001] This application claims benefit from U.S. patent application Ser. No. 61/979,602 which was filed on Apr. 15, 2014, and that is incorporated in its entirety herein.

FIELD OF THE INVENTION

[0002] This document relates generally to home appliances. More particularly, this document relates to hot beverage brewers that can selectively brew a variable volume of coffee.

BACKGROUND OF THE INVENTION

[0003] Hot beverage brewers are well known in art for use in brewing coffee, tea, etc. There are many different types of hot beverage brewers employing various brewing techniques and principles. In some scenarios, water is poured into a separate chamber and coffer grounds are disposed in a paper filter which is located above a coffee pot. Thereafter, the water is heated and directed into a funnel from which it drips through the coffee grounds and into the coffee pot, thereby making coffee.

SUMMARY OF THE INVENTION

[0004] The present disclosure concerns implementing systems and methods for operating a hot beverage brewer. The methods involve receiving a brew basket of a plurality of interchangeable brew baskets within a basket chamber of the hot beverage brewer. At least two of the plurality of interchangeable brew baskets are of different brew basket types and designed to hold different amounts of a beverage substance. Thereafter, the hot beverage brewer: automatically detects the brew basket type associated with the brew basket residing within the basket chamber; selects first operations from a plurality of operations that should be performed by the hot beverage brewer based on the brew basket type which was previously detected; and performs the first operations.

[0005] In some scenarios, the different brew basket types comprise a large brew basket type for use with carafes and a small basket type for use with single serve containers. Each of the interchangeable brew baskets comprises at least one peg coupled thereto for triggering performance of respective operations of the plurality of operations by the hot beverage brewer. The automatic detection of the brew basket type is facilitated by engagement of a portion of the brew basket with a triggering mechanism of the hot beverage brewer. The triggering mechanism comprises a mechanical triggering mechanism, an optical triggering mechanism, an electrical triggering mechanism, or a magnetic triggering mechanism. Thus, the engagement may cause a depression of a button, an actuation of a switch, or creation of closed electrical circuit.

[0006] The first operations comprise at least one of the following operations: discontinuing a display of a visual indicator; selecting at least two visual indicators or virtual buttons from a plurality of visual indicators or virtual buttons; optionally enabling functionality of selected virtual buttons; facilitating a display of selected visual indicators or virtual buttons on a display; setting a brew temperature; and setting a flow rate. The plurality of visual indicators or virtual buttons allow a user of the hot beverage brewer to specify a particular value for a volume parameter that is appropriate for the type of container in which the brewed hot beverage is to be disposed.

[0007] The present disclosure also concerns an apparatus. The apparatus comprises a hot beverage brewer with a basket chamber having a first aperture to direct a fluid to a carafe and a second aperture to direct the fluid to a single serve container. The first and second apertures are disposed at respective locations spatially offset from each other. A plurality of interchangeable brew baskets is provided that are of different brew basket types and designed to hold different amounts of a beverage substance. A first brew basket of the plurality of interchangeable brew baskets comprises a first outlet having a location that aligns with the first aperture when the first brew basket is disposed in said basket chamber. A second brew basket of the plurality of interchangeable brew baskets comprises a second outlet having a location that aligns with the second aperture when the second brew basket is disposed in the basket chamber. A spout is provided for directing a fluid into a single serve container that is pivotably coupled to the hot beverage brewer.

[0008] During operations, the hot beverage brewer: automatically detects a brew basket type associated with a brew basket residing within the basket chamber; selects first operations from a plurality of operations based on the brew basket type which was previously detected; and performs the first operations. The automatic detection of the brew basket type is facilitated by engagement of a portion of the brew basket with a triggering mechanism of the hot beverage brewer. The first operations comprise at least one of the following operations: discontinuing a display of a visual indicator; selecting at least two visual indicators or virtual buttons from a plurality of visual indicators or virtual buttons; optionally enabling functionality of selected virtual buttons; facilitating a display of selected visual indicators or virtual buttons on a display; setting a brew temperature; and setting a flow rate. The plurality of visual indicators or virtual buttons allow a user of the hot beverage brewer to specify a particular value for a volume parameter that is appropriate for the type of container in which the brewed hot beverage is to be disposed.

[0009] The present disclosure further concerns a multi-mode hot beverage brewer. The multi-mode hot beverage brewer comprises: a main body; a basket chamber; a spout; and a plurality of interchangeable brew baskets. The basket chamber has a first aperture to direct a fluid to a carafe and a second aperture to direct the fluid to a single serve container. The first and second apertures are disposed at respective locations spatially offset from each other. The spout is pivotably coupled to the main body and provided for guiding the fluid from the basket chamber to the single serve container. Each of the interchangeable brew baskets causes respective operations of the multi-mode hot beverage brewer to be triggered based on a type of brew basket disposed within the basket chamber.

DESCRIPTION OF THE DRAWINGS

[0010] Embodiments will be described with reference to the following drawing figures, in which like numerals represent like items throughout the figures, and in which:

[0011] FIGS. **1-3** each provide a front perspective view of an exemplary hot beverage brewer.

[0012] FIGS. **4-5** provide schematic illustrations of a basket chamber and a brew basket.

[0013] FIG. **6** is a schematic illustration of various internal components of the hot beverage brewer shown in FIG. **1**.

[0014] FIG. **7** is a detailed block diagram of the computing device shown in FIG. **6**.

[0015] FIG. **8** is a schematic illustration of the display and keypad shown in FIG. **1**.

[0016] FIGS. **9-21** each provide a schematic illustration that is useful for understanding a respective filter basket arrangement of the hot beverage brewer shown in FIG. **1** for carafe scenarios.

[0017] FIGS. **22-27** each provide a schematic illustration that is useful for understanding a respective filter basket arrangement of the hot beverage brewer shown in FIG. **1** for single serve container scenarios.

[0018] FIG. **28** is a flow diagram of an exemplary method for operating a hot beverage brewer.

[0019] FIG. **29** is a schematic illustration of an exploded assembly view of a hot beverage brewer.

DETAILED DESCRIPTION OF THE INVENTION

[0020] It will be readily understood that the components of the embodiments as generally described herein and illustrated in the appended figures could be arranged and designed in a wide variety of different configurations. Thus, the following more detailed description of various embodiments, as represented in the figures, is not intended to limit the scope of the present disclosure, but is merely representative of various embodiments. While the various aspects of the embodiments are presented in drawings, the drawings are not necessarily drawn to scale unless specifically indicated.

[0021] The present invention may be embodied in other specific forms without departing from its spirit or essential characteristics. The described embodiments are to be considered in all respects only as illustrative and not restrictive. The scope of the invention is, therefore, indicated by the appended claims rather than by this detailed description. All changes which come within the meaning and range of equivalency of the claims are to be embraced within their scope.

[0022] Reference throughout this specification to features, advantages, or similar language does not imply that all of the features and advantages that may be realized with the present invention should be or are in any single embodiment of the invention. Rather, language referring to the features and advantages is understood to mean that a specific feature, advantage, or characteristic described in connection with an embodiment is included in at least one embodiment of the present invention. Thus, discussions of the features and advantages, and similar language, throughout the specification may, but do not necessarily, refer to the same embodiment.

[0023] Furthermore, the described features, advantages and characteristics of the invention may be combined in any suitable manner in one or more embodiments. One skilled in the relevant art will recognize, in light of the description herein, that the invention can be practiced without one or more of the specific features or advantages of a particular embodiment. In other instances, additional features and advantages may be recognized in certain embodiments that may not be present in all embodiments of the invention.

[0024] Reference throughout this specification to "one embodiment", "an embodiment", or similar language means that a particular feature, structure, or characteristic described in connection with the indicated embodiment is included in at least one embodiment of the present invention. Thus, the phrases "in one embodiment", "in an embodiment", and similar language throughout this specification may, but do not necessarily, all refer to the same embodiment.

[0025] As used in this document, the singular form "a", "an", and "the" include plural references unless the context clearly dictates otherwise. Unless defined otherwise, all technical and scientific terms used herein have the same meanings as commonly understood by one of ordinary skill in the art. As used in this document, the term "comprising" means "including, but not limited to".

[0026] This document concerns home appliances, such as hot beverage brewers (e.g., coffee and/or tea brewers). Schematic illustrations of exemplary architectures for hot beverage brewers are provided in FIGS. **1-5**. A schematic illustration of an exploded assembly view the a hot beverage brewer is provided in FIG. **29**. Traditionally, consumers have two separate hot beverage brewers, namely a carafe style hot beverage brewer and a single serve style hot beverage brewer. This two appliance requirement is undesirable for many reasons generally understood by those skilled in the art. As such, the present invention addresses this issue by providing a single unit hot beverage brewer capable of brewing a hot beverage into a carafe and/or a single serve container during any given brewing cycle. The hot beverage is brewed at optimal temperature and speed so as to have the best extraction of flavor from crashed beans, seeds, spices or leaves (e.g., coffee grounds or tea leaves) disposed in the hot beverage brewer.

[0027] In this regard, the hot beverage brewer **100** is generally configured to selectively brew a variable volume of a hot beverage (e.g., coffee or tea) into a carafe **102** (as shown in FIG. **1**) or a variable volume of coffee or tea into a single serve container **202**, **302** (as shown in FIG. **2**). Carafes and single serve containers are well known in the art, and therefore will not be described herein. Still, it should be understood that the carafes **102** can include, but are not limited to, a glass carafe as shown in FIG. **1** or a thermal carafe (not shown). In some scenarios, the thermal carafe has a mechanism disposed therein for providing notification to the hot beverage brewer that it is to be used to store the brewed beverage during a particular brewing cycle. The mechanism can include, but is not limited to, a magnet. The mechanism can also trigger certain operations of the hot beverage brewer, such as a volume adjustment. The single serve container **202** can include, but is not limited to, a coffee cup or mug **202** as shown. in FIG. **2** or a thermos **302** as shown in FIG. **3**.

[0028] In the carafe scenarios, a carafe portion **108** of the hot beverage brewer **100** is used. The carafe portion **108** uses gravity to brew the hot beverage. For example, hot water is dripped into a brew basket **400** including crushed beans, seeds, spices or leaves (e.g., coffee grounds or tea leaves). The brew basket **400** is located in a basket chamber **402** below a dripper (not shown in FIGS. **1-3**) from which the hot water drips. The hot water then travels through the crushed beans/seeds/spices/leaves (e.g., coffee grounds or tea leaves) and into an aperture **502** formed in a bottom surface of the basket chamber **402**. After passing through the aperture **502**, the hot beverage flows into the carafe **102** located below the brew basket.

[0029] In the single serve scenarios, a single serve portion **204** of the hot beverage brewer **100** is used. The single serve portion **204** also uses gravity to brew the hot beverage. However, the hot water is directed to a spout **206** (via an aperture **504** formed in a ledge **506** extending out and away from a sidewall **508** of the basket chamber **402**) subsequent to passing through the crushed beans/seeds/spices/leaves (e.g., cof-

fee grounds or tea leaves), instead of to an area **208** in which the carafe **102** can be placed. The spout **206** is provided so that a plurality of different sized single serve containers **202**, **302** can be accommodated by the hot beverage brewer **100**. In this regard, the position of the spout **206** can be adjusted simply by pivoting the spout about a pivot point **210**.

[0030] Notably, a brewed hot beverage can be concurrently or simultaneously directed to a carafe and a single serve container. In these scenarios, the hot water is directed through both apertures **502** and **504** during a brewing cycle. As should be appreciated the brew basket employed in this scenario will have two offset outlets to enable such concurrent or simultaneous operations (e.g., outlets **1202** of FIG. **12** and **2106** of FIG. **21**).

[0031] Brewing operations of the hot beverage brewer **100** will now be discussed in more detail in relation to FIG. **6**. As shown in FIG. **6**, the hot beverage brewer **100** comprises a plurality of internal components **602-622**. These internal components include, but are not limited to, a water tank **602**, solenoid valves **604**, **606**, a boiler **608**, a vent **610**, an air pump **612**, an air tube **614**, a shower head (or dripper) **616**, an interchangeable brew basket **618**, a hot water tube **620**, a computing device **622**, a hot plate **624** and a basket chamber **626**. Notably, a single heating system is provided for brewing hot beverages into a carafe and/or a single serve container.

[0032] Operations of the beverage brewer will be discussed below in relation to a carafe scenario. Still, it should be understood that the operations of the beverage brewer in a single serve scenario are the same or similar to those described below. For example, in some cases, the only change in the following discussion in the single serve scenarios would be which brew basket is employed.

[0033] During operation, a carafe (e.g., carafe **102** of FIG. **1**) is placed on a hot plate **624** or a single cup container is placed under the pitvotable spout (e.g., spout **206** of FIG. **2**). Also, a brew basket **618** is selected from a plurality of interchangeable brew baskets. The brew baskets are designed to hold different amounts of crushed beans, seeds, spices or leaves (e.g., coffee grounds or tea leaves). For example, a first one of the brew baskets can hold a relatively large amount of crushed beans/seeds/spices/leaves ("large brew basket"), while a second one of the brew baskets can hold a relatively small amount of crushed beans/seeds/spices/leaves ("small brew basket"). Next, the selected brew basket **618** is disposed in a basket chamber **626** and filled with the crushed beans/seeds/spices/leaves. Water is also poured into the water tank **602**, where it will be heated to a certain temperature.

[0034] Notably, at least one peg **628** is disposed on or coupled to each of the brew baskets. Each peg **628** provides a means for triggering certain operations of the hot beverage brewer **100** based on the type of brew basket being used. In this regard, the peg **628** may be formed of any suitable material such as plastic or metal. Also, a different number of pegs can be provided on a large brew basket as compared to that provided on the small brew basket. For example, two pegs can be provided with a large brew basket, while only one peg is provided with a small brew basket or vice versa).

[0035] In the plastic scenarios, the peg **628** may engage a mechanical triggering mechanism or an optical triggering mechanism. For example, the peg **628** may depress a respective button of a plurality of push buttons or actuate a respective switch **630** of a plurality of switches when the respective brew basket **618** is placed in the basket chamber **626**. In the metal scenarios, the peg **628** may engage an electrical triggering mechanism or a magnetic triggering mechanism. For example, the peg **628** may engage two conductive contacts so as to close an electrical circuit.

[0036] Such engagement of the peg with the triggering mechanism causes the hot beverage brewer **100** to perform certain operations. For example, the computing device **622** of the hot beverage brewer **100** (1) may discontinue displaying a visual indicator (e.g., an "Add Basket" visual indicator **804** of FIG. **8**) on a display (e.g., display **104** of FIG. **1**) thereof, (2) select at least two visual indicators from a plurality of visual indicators based on the type of brew basket disposed in the basket chamber **626**, (3) facilitate the display of the selected visual indicators on a display (e.g., display **104** of FIG. **1**), (4) select at least two virtual buttons from a plurality of virtual buttons based on the type of brew basket disposed in the basket chamber **626**, (5) enable the selected virtual buttons, (6) facilitate the display of the selected virtual buttons on a touch- screen display (e.g., display **104** of FIG. **1**, (7) set a brew temperature, and/or (8) set a flow rate. The displayed visual indicators and/or virtual buttons allow a user of the hot beverage brewer **100** to specify a particular value for a volume parameter that is appropriate for the type of container in which the brewed hot beverage is to be disposed (e.g., a carafe or a single serve container). in the case that the virtual buttons are not provided, then the user can specify the particular value for the volume parameter as indicated by the visual indicators using a "Brew Size" button **810** of key pad **106**.

[0037] Schematic illustrations of exemplary visual indicators or virtual buttons are provided in FIG. **8**. As shown in FIG. **8**, the visual indicator **804** is shown if a brew basket is not present in the basket chamber of the beverage brewer. Visual indicator **806** is shown if there is no water in the unit at all or there is not enough water for the selected volume of brewing. Visual indicators or virtual buttons **802** are operative to facilitate a user selection of a 12 cup value, a 10 cup value, a 6 cup value, a 16 ounce value, a 12 ounce value and an 8 ounce value. When a large brew basket is detected within the basket chamber **626** via the peg(s), then the visual indicators or virtual buttons for user-selection of 6 cups, 10 cups and 12 cups are displayed and/or enabled. In contrast, when a small brew basket is detected within the basket chamber **626** via the peg(s), then the visual indicators or virtual buttons for user-selection of 8 ounce, 12 ounce and 16 ounce are displayed and/or enabled. The present invention is not limited to these specific volume and display configurations.

[0038] In response to the user-selection of a volume parameter value, the computing device **622** controls internal components **604-612** and **616** for brewing coffee. For example, the computing device **622** performs operations (1) to determine how much water is currently present in the water tank **602**, and (2) to determine whether the current amount of water in the water tank is approximately equal to or less than the amount specified by the user selected visual indicator or virtual button **802**. If the current amount of water in the water tank is less than the user- selected volume parameter value, then an "Add Water" visual indicator is displayed on the display **104**. Also, at this time, a "Brew Now/Off" key **808** is disabled. The "Brew Now/Off" key **808** is re-enabled only when a detection is made that the correct amount of water is in the water tank **602**. A visual indicator may be provided adjacent to, around or in proximity to the "Brew Now/Off" key **808** so that the user is informed about the current state of the "Brew Now/Off" key **808**. For example, in some sce-

narios, light is emitted around the "Brew Now/Off" key **808** when it is enabled or disabled.

[0039] In response to the depression of the enabled "Brew Now/Off" key **808**, the hot beverage is brewed by: transferring the water from the water tank **602** to the boiler **608** vi air pump **612**; heating the water to a particular temperature at the boiler **408**; transferring the hot water to the shower head **616** via the hot water tube **620**, when a detection is made (e.g., by a temperature sensor—not shown) that the water has been heated to the particular temperature; and dripping the hot water from the shower head **616** into the brew basket **618**. Gravity causes the hot water to pass through the brew basket **618** and into the carafe. The brewed beverage in the carafe is kept warm via hot plate **624**.

[0040] A more detailed block diagram of the computing device **622** is provided in FIG. **7**. As shown in FIG. **7**, the computing device **622** may include more or less components than those shown in FIG. **7**. However, the components shown are sufficient to disclose an illustrative embodiment implementing the present invention. Some or all of the components of the computing device **622** can be implemented in hardware, software and/or a combination of hardware and software. The hardware includes, but is not limited to, one or more electronic circuits. The electronic circuits can include, but are not limited to, passive components (e.g., resistors and capacitors) and/or active components (e.g., amplifiers and/or microprocessors). The passive and/or active components can be adapted to, arranged to and/or programmed to perform one or more of the methodologies, procedures, or functions described herein.

[0041] As shown in FIG. **7**, the computing device **622** comprises a user interface **706**, a Central Processing Unit ("CPU") **702**, a memory **704**, and hardware entities **722**. The user interface can include input devices **708** (e.g., a keypad **106** and/or a microphone **714**) and output devices **710** (e.g., speaker **716**, a display **104**, and/or LEDs **720**), which facilitate user-software interactions for controlling operations of the hot beverage brewer **100**.

[0042] At least some of the hardware entities **722** perform actions involving access to and use of memory **704**, which can be a Random Access Memory ("RAM"), a disk driver and/or a Compact Disc Read Only Memory ("CD-ROM"). Hardware entities **722** can include a disk drive unit **724** comprising a computer-readable storage medium **726** on which is stored one or more sets of instructions **750** (e.g., software code) configured to implement one or more of the methodologies, procedures, or functions described herein. The instructions **750** can also reside, completely or at least partially, within the memory **704** and/or within the CPU **702** during execution thereof by the computing device **622**. The memory **704** and the CPU **702** also can constitute machine-readable media. The term "machine-readable media", as used here, refers to a single medium or multiple media (e.g., a centralized or distributed database, and/or associated caches and servers) that store the one or more sets of instructions **750**. The term "machine-readable media", as used here, also refers to any medium that is capable of storing, encoding or carrying a set of instructions **750** for execution by the computing device **622** and that cause the computing device **622** to perform any one or more of the methodologies of the present disclosure.

[0043] In some embodiments of the present invention, the hardware entities **722** include an electronic circuit (e.g., a processor) programmed for facilitating the control of a hot beverage brewer. In this regard, it should be understood that the electronic circuit can access and run at least one software application **752** installed on the computing device **622**. The software application **752** is generally operative to facilitate brewing coffee. In this regard, the software application **752** implements some or all of the coffee brewing processes described herein.

[0044] Exemplary architectures for the interchangeable brew baskets will now be described in detail in relation to FIGS. **9-21**. More specifically, a first exemplary architecture for a small brew basket is shown in FIGS. **9-13**, a second exemplary architecture for a small brew basket is shown in FIGS. **14-17** and a third exemplary architecture for a large brew basket is shown in FIGS. **18-21**. Notably, the small brew baskets of FIGS. **9-13** and **14-17** are configured to hold a smaller amount of crushed beans/seeds/spices/leaves (e.g., coffee grounds or tea leaves) than the large brew basket of FIGS. **18-21**.

[0045] Also, the large and small brew baskets can have the same or different number of pegs coupled thereto. The pegs may have any shape and/or size selected in accordance with a particular application. If the large and small brew baskets have the same number of pegs, then the pegs will be placed at different relative locations thereon. For example, two pegs of the large brew basket reside in proximity to a front right corner thereof, while two pegs of the small brew basket reside in proximity to a front left corner thereof. Alternatively, both sets of pegs reside in proximity to the same corner of the large and small brew baskets but have different spacing between the two pegs.

[0046] As noted above, the pegs provide a means for triggering certain operations of the hot beverage brewer based on the type of brew basket being used. These operations can include, but are not limited to, (1) setting a brew temperature, (2) setting a flow rate, (3) discontinuing the display of certain icons, identifiers or other information on a display, and/or (4) enabling/displaying select visual indicators or virtual buttons. The pegs may be fixedly or removably secured to the brew baskets. The removable pegs allow the user to customize which operations (1)-(4) are to be triggered thereby. For example, a first person prefers coffee at a first temperature and a second person prefers coffee at a second different temperature. A peg can be placed at a first location on the brew basket to indicate the user-selection of the first temperature or at a second location on the brew basket to indicate the user-selection of the second temperature. The same technique can be used to select a flow rate. The present invention is not limited to the particulars of this example.

[0047] Referring now to FIGS. **9-13**, the small brew basket **900** comprises a main body **902** and an integrated pod **904**. A handle **1102** is coupled to the main body **902** to facilitate the brew baskets insertion into and removal from the basket chamber **402** of the hot beverage brewer **100**. All of these components **902**, **904**, **1102** can be formed of any suitable material such as plastic.

[0048] The integrated pod **904** includes a hinged lid **1002** coupled to a pivot member **1008**. The hinged lid **1002** allows access to a pan **1004**. The pan **1004** is sized and shaped to receive a certain amount of crushed beans/seeds/spices/leaves (e.g., coffee grounds or tea leaves).

[0049] Two filters **1006**, **1010** are provided as well. A first filter **1010** is provided on the hinged lid **1002**, while a second filter **1006** is provided in the pan **1004**. In effect, hot water passes through filter **1010** upon entry into the pan **1004** and passes through filter **1006** upon exit from the pan **1004**. The

filters **1006**, **1010** may be formed of the same or different filtration materials. The filtration materials include, but are not limited to wire meshes and activated carbon based materials. The wire mesh can be formed of a nylon, polyester or stainless steel. The aperture sizing of the wire mesh can be the same or different for the first filter **1010** and the second filer **1006**. In some scenarios, filter **1010** is designed to filter contaminants from the hot water. Accordingly, filter **1010** may include a plurality of filtration layers. For example, filter **1010** may include two mesh layers having an activated carbon layer disposed therebetween. The two mesh layers may have the same or different aperture sizing.

[0050] Two pegs **1204**, **1206** are coupled to sidewalls **1208**, **1210** of the main body **902**. The pegs are shown as being fixedly secured to the sidewalls **1208**, **1210**. However, the present invention is not limited in this regard. The pegs could alternatively be removably secured to the sidewalls **1208**, **1210**. Also, there may be more or less pegs than that shown in FIGS. **9-13**. The peg(s) provide a means for triggering certain operations of the hot beverage brewer based on the type of brew basket being used, as discussed above. These operations can include, but are not limited to, (1) setting a brew temperature, (2) setting a flow rate, (3) discontinuing the display of certain icons, identifiers or other information on a display, and/or (4) enabling/displaying select visual indicators or virtual buttons.

[0051] A spout line fitting **1202** is provided to guide the hot water to aperture **504** of the basket chamber **402**. In effect, the hot water is directed towards the spout **206** and into a single serve container during a brew cycle.

[0052] Notably, the brew basket **900** is designed such that a certain amount of pressure (e.g., 2 psi) builds inside the integrated pod **904** during a brew cycle. In this regard, water is pumped into the integrated pod **904** through an opening which is larger than the opening out of the integrated pod **904**. Also, two O-ring gaskets **1302**, **1304** are provided to facilitate such pressurization, as well as prevent water from leaking out of the integrated pod **904** via paths other than the spout line fitting **1202**.

[0053] Referring now to FIGS. **14-17**, the small brew basket **1400** comprises a main body **1402** and a removable pod **1404**. A first handle **1608** is coupled to the main body **1402** to facilitate the brew baskets insertion into and removal from the basket chamber **402** of the hot beverage brewer **100**. A second handle **1602** is coupled to the removable pod **1494** to facilitate the insertion into and removal from a cavity **1610** formed in the main body **1402**. This enables relatively easier cleaning of the pod **1404**, and/or the ability to use a plurality of interchangeable pods. The interchangeable pods can be designed to hold different amounts of crushed beans/seeds/spices/leaves (e.g., coffee grounds or tea leaves). If the interchangeable pods are not employed, then a plurality of measurement lines can be provided on an inner sidewall surface of the removable pod **1404**. All of these components **1402**, **1404**, **1602**, **1608** can be formed of any suitable material such as plastic.

[0054] The removable pod **1404** includes a hinged lid **1604** coupled to a pivot member **1704**. The hinged lid **1604** allows access to a pan **1606**. The pan **1606** is sized and shaped to receive a certain amount of crashed beans/seeds/spices/leaves (e.g., coffee grounds or tea leaves).

[0055] Two filters **1406**, **1408** are provided as well. A first filter **1406** is provided on the hinged lid **1604**, while a second filter **1408** is provided in bottom of the pan **1606**. In effect, hot water passes through first filter **1406** upon entry into the pan **1606** and passes through the second filter **1408** upon exit from the pan **1606**. The filters **1406**, **1408** may be formed of the same or different filtration materials. The filtration materials include, but are not limited to, wire meshes and activated carbon based materials. The wire mesh can be formed of a nylon, polyester or stainless steel. The aperture sizing of the wire mesh can be the same or different for the first filter **1406** and the second filter **1408**. In some scenarios, the first filter **1406** is designed to filter contaminants from the hot water. Accordingly, the first filter **1406** may include a plurality of filtration layers. For example, the first filter **1406** may include two mesh layers having an activated carbon layer disposed therebetween. The two mesh layers may have the same or different aperture sizing.

[0056] Two pegs **1506**, **1508** are coupled to sidewalls **1510**, **1512** of the main body **1402**. The pegs are shown as being fixedly secured to the sidewalls **1510**, **1512**. However, the present invention is not limited in this regard. The pegs could alternatively be removably secured to the sidewalk **1510**, **1512**. Also, there may be more or less pegs than that shown in FIGS. **14-17**. The peg(s) provide a means for triggering certain operations of the hot beverage brewer based on the type of brew basket being used, as discussed above. These operations can include, but are not limited to, (1) setting a brew temperature, (2) setting a flow rate, (3) discontinuing the display of certain icons, identifiers or other information on a display, and/or (4) enabling/displaying select visual indicators or virtual buttons.

[0057] A spout line fitting **1502** is provided to guide the hot water to aperture **504** of the basket chamber **402**. In effect, the hot water is directed towards the spout **206** and into a single serve container a brew cycle.

[0058] Notably, the brew basket **1400** is designed such that a certain amount of pressure (e.g., 2 psi) builds inside the removable pod **1404** during a brew cycle. In this regard, water is pumped into the removable pod **1404** through an opening which is larger than the opening out of the removable pod **1404**. Also, two O-ring gaskets **1612**, **1702** are provided to facilitate such pressurization, as well as prevent water from leaking out of the removable pod **1404** via paths other than the spout line fitting **1502**.

[0059] Referring now to FIGS. **18-21**, the large brew basket **1800** comprises a main body **1806** and a removable filter **1804**. A first handle **1802** is coupled to the main body **1806** to facilitate the brew basket's **1800** insertion into and removal from the basket chamber **402** of the hot beverage brewer **100**. A second handle **1902** is coupled to the removable filter **1804** to facilitate the insertion into and removal from a cavity **1904** formed in the main body **1806**. The removable filter **1804** is sized and shaped to receive a certain amount of crushed beans/seeds/spices/leaves (e.g., coffee grounds or tea leaves). The removable filter **1804** is formed of one or more filtration materials. The filtration materials include, but are not limited to, wire meshes and activated carbon based materials. The wire mesh can be formed of a nylon, polyester or stainless steel.

[0060] A plurality of ribs **2002** are formed on an inner bottom surface **2904** of the main body **1806**. The ribs **2002** are provided to facilitate fluid flow out of an outlet element **2106**. The outlet element **2106** is sized and shaped to fit within aperture **502** of the basket chamber **402**. The outlet element **2196** is provided to guide the hot water to aperture **502**. In effect, hot water is directed towards a carafe disposed ther-

ebelow during a brew cycle. Notably, the outlet element **2106** can include, but is not limited to, a pause-and-serve component to ensure that the hot beverage does not continue to flow therethrough when the carafe is removed from the beverage brewer during a brewing cycle.

[0061] Two pegs **2102**, **2104** are coupled to sidewalk **2108**, **2110** of the main body **1806**. The pegs are shown as being fixedly secured to the sidewalls **2108**, **2110**. However, the present invention is not limited in this regard. The pegs could alternatively be removably secured to the sidewalls **2108**, **2110**. Also, there may be more or less pegs than that shown in FIGS. **18-21**. As discussed above, the pegs provide a means for triggering certain operations of the hot beverage brewer based on the type of brew basket being used. These operations cart include, but are not limited to, (1) setting a brew temperature, (2) setting a flow rate, (3) discontinuing the display of certain icons, identifiers or other information on a display, and/or (4) enabling/displaying select visual indicators or virtual buttons.

[0062] As noted above, a plurality of interchangeable brew baskets are provided with the hot beverage brewer **100**. In this regard, the hot beverage brewer is provided with a side compartment **2200** as shown in FIGS. **22-23**. The side compartment **2200** comprises a door **2204** hingedly attached to the main body **2202** of the hot beverage brewer which can be easily opened and closed by a user of the hot beverage brewer via opening tab **2400**. The door hinge may reside along a top, side or bottom of the door **2204**. The side compartment door **2204** may swing open from 0 degrees to N degrees, where N is an integer (e.g., 135). The value of N may be selected such that a brew basket can be easily inserted into and removed from a basket chamber **2206** coupled to the side compartment door **2204**. The basket chamber **2206** is sized and shaped to receive each of the plurality of interchangeable brew baskets in one or more orientations (as shown in FIGS. **26-27**). A removable drip tray **2500** may be provided for maintaining a clean basket chamber **2206**.

[0063] The present invention is not limited to the side compartment **2200** architecture shown in FIGS. **22-23**. In other scenarios, the side compartment comprises a removable tray instead of the basket chamber **2206** coupled to the side compartment door **2204**. Access to the removable tray is provided via a door. The door may be as separate component from the tray or integrated with the tray.

[0064] Referring now to FIG. **28**, there is provided a flow diagram of an exemplary method **2800** for operating a hot beverage brewer. Method **2800** begins with step **2802** and continues with step **2804**. In step **2804**, a brew basket of a plurality of interchangeable brew baskets brew baskets **900**, **1400** and **1800**) is received within a basket chamber of the hot beverage brewer. At least two of the plurality of interchangeable brew baskets are of different brew basket types and designed to hold different amounts of a crushed substance. Thereafter in steps **2806-2810**, the hot beverage brewer: automatically detects the brew basket type associated with the brew basket residing within the basket chamber; selects first operations from a plurality of operations that should be performed by the hot beverage brewer based on the brew basket type which was previously detected; and performs the first operations. Upon completing step **2810**, step **2812** is performed where method **2800** ends or other operations are performed.

[0065] In some scenarios, the different brew basket types comprise a large brew basket type for use with carafes and a small basket type for use with single serve containers. Each of the interchangeable brew baskets comprises at least one peg coupled thereto for triggering performance of respective operations of the plurality of operations by the hot beverage brewer. The automatic detection of the brew basket type is facilitated by engagement of a portion of the brew basket with a triggering mechanism of the hot beverage brewer. The triggering mechanism comprises a mechanical triggering mechanism, an optical triggering mechanism, an electrical triggering mechanism, or a magnetic triggering mechanism. Thus, the engagement may cause a depression of a button, an actuation of a switch, or creation of closed electrical circuit.

[0066] The first operations **2810** comprise at least one of the following operations: discontinuing a display of a visual indicator; selecting at least two visual indicator or virtual buttons from a plurality of visual indicators or virtual buttons; enabling functionality of selected virtual buttons; facilitating a display of selected visual indicators or virtual buttons on a display; setting a brew temperature; and setting a flow rate. The plurality of visual indicators or virtual buttons allow a user of the hot beverage brewer to specify a particular value for a volume parameter that is appropriate for the type of container in which the brewed hot beverage is to be disposed. The first operations can also optionally involve checking of there is enough water for that volume parameter selection before the beverage brewer performs a brewing process.

[0067] All of the apparatus, methods, and algorithms disclosed and claimed herein can be made and executed without undue experimentation in light of the present disclosure. While the invention has been described in terms of preferred embodiments, it will be apparent to those having ordinary skill in the art that variations may be applied to the apparatus, methods and sequence of steps of the method without departing from the concept, spirit and scope of the invention. More specifically, it will be apparent that certain components may be added to, combined with, or substituted for the components described herein while the same or similar results would be achieved. All such similar substitutes and modifications apparent to those having ordinary skill in the art are deemed to be within the spirit, scope and concept of the invention as defined.

[0068] The features and functions disclosed above, as well as alternatives, may be combined into many other different systems or applications. Various presently unforeseen or unanticipated alternatives, modifications, variations or improvements may be made by those skilled in the art, each of which is also intended to be encompassed by the disclosed embodiments.

We claim:

1. A method for operating a hot beverage brewer, comprising:

receiving a brew basket of a plurality of interchangeable brew baskets within a basket chamber of the hot beverage brewer, where at least two of the plurality of interchangeable brew baskets are of different brew basket types and designed to hold different amounts of a beverage substance;

automatically detecting, by the hot beverage brewer, the brew basket type associated with said brew basket residing within the basket chamber;

selecting first operations from a plurality of operations that should be performed by the hot beverage brewer based on the brew basket type which was previously detected; and

performing the first operations by the hot beverage brewer.

2. The method according to claim **1**, wherein the different brew basket types include a large brew basket type for use with carafes and a small basket type for use with single serve containers.

3. The method according to claim **1**, wherein each of the interchangeable brew baskets includes at least one peg coupled thereto for triggering performance of respective operations of the plurality of operations by the hot beverage brewer.

4. The method according to claim **1**, wherein the automatic detection of the brew basket type is facilitated by engagement of a portion of the brew basket with a triggering mechanism of the hot beverage brewer.

5. The method according to claim **4**, wherein the triggering mechanism includes a mechanical triggering mechanism, an optical triggering mechanism, an electrical triggering mechanism, or a magnetic triggering mechanism.

6. The method according to claim **4**, wherein the engagement causes a depression of a button, an actuation of a switch, or creation of closed electrical circuit.

7. The method according to claim **1**, wherein the first operations includes at least one of the following operations: discontinuing a display of a visual indicator; selecting at least two visual indicators or virtual buttons from a plurality of virtual buttons; enabling functionality of selected virtual buttons; facilitating a display of selected visual indicators or virtual buttons on a display; setting a brew temperature; and setting a flow rate.

8. The method according to claim **6**, wherein the plurality of visual indicators or virtual buttons allow a user of the hot beverage brewer to specify a particular value for a volume parameter that is appropriate for the type of container in which the brewed hot beverage is to be disposed.

9. The method according to claim **1**, further including simultaneously directing a hot beverage from the brew basket to a carafe and a single serve container.

10. An apparatus, comprising:

a hot beverage brewer with a basket chamber having a first aperture to direct a fluid to a carafe and a second aperture to direct the fluid to a single serve container, where the first and second apertures are disposed at respective locations spatially offset from each other; and

a plurality of interchangeable brew baskets that are of different brew basket types and designed to hold different amounts of a beverage substance, where

a first brew basket of the plurality of interchangeable brew baskets comprises a first outlet having a location that aligns with the first aperture when the first brew basket is disposed in said basket chamber, and

a second brew basket of the plurality of interchangeable brew baskets comprises a second outlet having a location that aligns with the second aperture when the second brew basket is disposed in said basket chamber.

11. The apparatus of claim **10**, wherein the hot beverage brewer

automatically detects a brew basket type associated with a brew basket residing within the basket chamber,

selects first operations from a plurality of operations based on the brew basket type which was previously detected, and

performs the first operations.

12. The apparatus according to claim **11**, wherein the automatic detection of the brew basket type is facilitated by engagement of a portion of the brew basket with a triggering mechanism of the hot beverage brewer.

13. The apparatus according to claim **12**, wherein the triggering mechanism includes a mechanical triggering mechanism, an optical triggering mechanism, an electrical triggering mechanism, or a magnetic triggering mechanism.

14. The apparatus according to claim **12**, wherein the engagement causes a depression of a button, an actuation of a switch, or creation of closed electrical circuit.

15. The apparatus according to claim **11**, wherein the first operations includes at least one of the following operations: discontinuing a display of a visual indicator; selecting at least two visual indicators or virtual buttons from a plurality of visual indicators or virtual buttons;

enabling functionality of selected virtual buttons; facilitating a display of selected visual indicator or virtual buttons on a display; setting a brew temperature; and setting a flow rate.

16. The apparatus according to claim **15**, wherein the plurality of visual indicators or virtual buttons allow a user of the hot beverage brewer to specify a particular value for a volume parameter that is appropriate for the type of container in which the brewed hot beverage is to be disposed.

17. The apparatus according to claim **10**, wherein the different brew basket types includes a large brew basket type for use with carafes and a small basket type for use with single serve containers.

18. The apparatus according to claim **10**, wherein each of the interchangeable brew baskets includes at least one peg coupled thereto for triggering performance of respective operations of the plurality of operations by the hot beverage brewer.

19. The apparatus according to claim **10**, further including a spout for directing a fluid into a single serve container that is pivotably coupled to the hot beverage brewer.

20. A multi-mode hot beverage brewer, comprising

a main body;

a basket chamber having a first aperture to direct a fluid to a carafe and a second aperture to direct the fluid to a single serve container, where the first and second apertures are disposed at respective locations spatially offset from each other;

a spout pivotably coupled to the main body and provided for guiding the fluid from the basket chamber to the single serve container; and

a plurality of interchangeable brew baskets that each cause respective operations of the multi-mode hot beverage brewer to be triggered based on a type of brew basket disposed within the basket chamber.

21. A method according to claim **1**, further including starting a brew cycle only when it is determined that a sufficient amount of water is present in a water tank of the hot beverage brewer, where the sufficiency of the amount of water is determined based on the brew basket type associated with said brew basket residing within the basket chamber.

22. A method according to claim **1**, further including selectively displaying at least a 12 cup volume visual indicator exclusively when a brewed beverage is to be transferred to a non-thermal carafe.

* * * * *