UNITED STATES DISTRICT COURT
CENTRAL DISTRICT OF CALIFORNIA

CIVIL MINUTES - GENERAL

Case No.	CV 21-3402-GW-AGRx	Date	December 13, 2024
Title	*K-fee Sys. GmbH v. Nespresso USA, Inc., et al.*		

Present: The Honorable	GEORGE H. WU, UNITED STATES DISTRICT JUDGE	
Javier Gonzalez	None Present	
Deputy Clerk	Court Reporter / Recorder	Tape No.

Attorneys Present for Plaintiffs:	Attorneys Present for Defendants:
None Present	None Present

PROCEEDINGS: IN CHAMBERS - TENTATIVE RULING ON *MARKMAN*/CLAIM CONSTRUCTION

Attached hereto is the Court's Tentative Ruling on *Markman*/Claim Construction set for hearing on December 16, 2024 at 9:00 a.m.

_____ : _____

Initials of Preparer JG

***K-fee System GmbH v. Nespresso USA, Inc. et al*;** Case No: 2:21-cv-03402-GW-(AGRx)
Tentative Ruling on *Markman*/Claim Construction

I. Introduction

Plaintiff K-fee System GmbH ("K-fee") filed this patent infringement action against Defendant Nespresso USA, Inc. ("Nespresso") on April 21, 2021. Compl., Docket No. 1 in Case No. 21-cv-3402 ("*K-fee I*"). K-fee alleges that Nespresso infringes U.S. Patent Nos. 10,858,176 ("the '176 Patent"), 10,858,177 ("the '177 Patent"), and 10,870,531 ("the '531 Patent"). *See generally id.* On January 25, 2022, K-fee filed an additional patent infringement action against Nespresso, asserting U.S. Patent Nos. 10,994,923 ("the '923 Patent"); 11,230,430 ("the '430 Patent"); and 11,254,491 ("the '491 Patent"). *See generally* Compl., Docket No. 1; First Am. Compl., Docket No. 13 in Case No. 2:22-cv-00525 ("*K-fee II*"). Nespresso then filed an action for declaratory judgment that it does not infringe U.S. Patent Nos. 11,465,829 ("the '829 Patent"); 11,465,830 ("the '830 Patent); 11,542,094 ("the '094 Patent"); 11,548,722 ("the '722 Patent"); and 11,554,910 ("the '910 Patent") against K-fee. *See generally* Compl., Docket No. 1; First Am. Compl., Docket No. 13 in Case No. 22-cv-09295 ("*K-fee III*"). The Court consolidated *K-fee I*, *K-fee II*, and *K-fee III*. Docket No. 308 in *K-fee I*.

The parties request construction of five disputed terms from the patents at issue in *K-fee II* and *K-fee III*. Joint Claim Construction and Prehearing Statement ("JCCPS"), Docket No. 330 in *K-fee I*; JCCPS, Docket No. 74 in *K-fee II*. The parties previously filed materials for four of these terms in *K-fee III.* Docket Nos. 84 (Nespresso's Opening Claim Construction Brief), 85 (K-fee's Opening Claim Construction Brief), 92 (Nespresso's Responsive Claim Construction Brief), 93 (K-fee's Responsive Claim Construction Brief). They filed materials for the remaining term in *K-fee I.* Docket Nos. 335 (K-fee's Opening Claim Construction Brief), 336 (Nespresso's Opening Claim Construction Brief), 339 (K-fee's Responsive Claim Construction Brief), 340 (Nespresso's Responsive Claim Construction Brief).

The Court would construe the disputed terms as stated herein.

II. Background

A. Procedural History

The Court previously construed six terms in *K-fee I*, including the term "barcode." Docket No. 111 in *K-fee I*. Nespresso then moved for summary judgment of noninfringement in view of the construction. Docket No. 126 in *K-fee I*. The Court granted Nespresso's motion. Docket No.

222 in *K-fee I*. K-fee appealed the claim construction and summary judgment rulings. Docket No. 228 in *K-fee I*. The Federal Circuit reversed the construction of "barcode" and the summary judgment ruling, and remanded the case for further proceedings. Docket No. 271 in *K-fee I*.

The Court did not previously construe any terms in *K-fee II* and *K-fee III*. Instead, the Court stayed these actions pending the *K-fee I* appeal and *inter partes* review ("IPR") proceedings involving the asserted patents. *See* Docket Nos. 88 in *K-fee II*; Docket No. 106 in *K-fee III*. The table below provides the status of these proceedings:

Proceeding	Patent	Status	Appeal
IPR2021-01221	'176	Institution denied.	n/a
IPR2021-01222	'177	Institution denied.	n/a
IPR2021-01223	'531	Institution denied.	n/a
IPR2022-01574	'491	Final written decision, no unpatentability finding.	Pending.
IPR2023-00485	'430	Final written decision, claims 1-10 unpatentable.	Pending.
IPR2023-00502	'923	Final written decision, claims 1-16 unpatentable.	Pending.
IPR2024-00239	'094	Institution denied.	n/a
IPR2024-00254	'829	Pending.	n/a
IPR2024-00257	'722	Pending	n/a
IPR2024-00304	'830	Pending.	n/a
IPR2024-00299	'910	Pending.	n/a

B. Technical Background

The parties' disputes concern terms in the '491, '430, '923, '094, '829, '722, '830, and '910 Patents. The patents relate to single use beverage capsules that use identifiers to ensure compatibility between the capsule and brewing machine. These patents all claim ultimate priority to the same PCT application, filed on July 22, 2011, as do the *K-fee I* Patents. The *K-fee I*, *II*, and *III* patents also share a common specification. The Court summarized the relevant technical background in its claim construction ruling in *K-fee I* and incorporates that discussion by reference here. Docket No. 111 § II in *K-fee I*.

III. Legal Standard

The Court provided the relevant legal standard in its claim construction ruling in *K-fee I* and incorporates that discussion by reference here. Docket No. 111 § III.

IV. Discussion

A. Agreed Upon Claim Terms

The parties agree on constructions for the following terms:

Term	Agreed Construction

"barcode" ('430 Patent, Claims 1–10; '923 Patent Claims 1–16, '176 Patent Claims 1–15, '177 Patent Claims 1–20, '531 Patent Claims 1–16, '910 Patent Claim 5)	Plain and ordinary meaning, i.e., "code consisting of bars having variable width where the bars include lines and gaps"
"wherein the wall region has an electrically conductive section" ('923 Patent, Claims 5 and 11; '722 Patent Claims 1–24, '830 Patent Claims 11–12) "the base element has an exterior wall region with an electrically conductive section" ('094 Patent Claims 19–20)	As construed in Docket No. 111 at 13-16 (Mar. 10, 2022) (Final Order on Claim Construction): "plain and ordinary meaning (i.e., consistent with Nespresso's suggestion)," where Nespresso's proposed construction was "wall region where some but not all of the wall region is electrically conductive" / "base element where some but not all of the base element is electrically conductive"
"a seal that is configured to bear against a top side of the cover in a region between the peripheral region of the cover and the region of the cover that is pierced by the chamfered mandrel" ('829 Patent Claims 1–19) "a sealing region that is configured to be sealed against by a seal of the beverage machine, the sealing region is located between the piercing region and the perimeter of the cover" ('830 Patent Claims 1–12) "a seal that is at least partially seated in the groove and configured to bear against a top side of the cover in a region between the peripheral region of the cover and the region of the cover that is pierced by the chamfered mandrel" ('094 Patent Claims 1–20) "a seal that is configured to bear against a top side of the lid in a region between the peripheral region of the lid and the region of the cover that is pierced by the chamfered mandrel" / "a seal at least partially located in the groove that is configured to bear against a top side of the lid in a region between a peripheral edge of the lid and the region of the	Plain and ordinary meaning.

lid that is pierced by the mandrel" / "a seal that is at least partially seated in the groove, the seal is configured to bear against a top side of the lid" ('722 Patent Claims 10–12, 15, 19–20, 22) "the cover being dimensioned and configured to provide a sealing area that is configured to bear against a seal of the specific coffee machine" ('910 Patent Claims 1–8)	
"the cover has a second height that is defined between the peripheral region and the central region" ('829 Patent Claims 1–19) "the cover is bowed outwardly to a second height in the central region relative to the perimeter of the cover" ('830 Patent Claims 1–12) "the cover is bowed upwardly to a second height at the central region relative to the perimeter" ('910 Patent Claims 1–8)	Plain and ordinary meaning.
"a ledge formed at the inside surface of the wall and projecting towards the central longitudinal axis" ('830 Patent Claims 1–7) "inside the surface of the wall comprises a ledge projecting towards the central longitudinal axis" ('830 Patent Claim 9) "the cavity is defined by an inside wall that includes a ledge at an upper region thereof, the ledge projects from the inside wall towards the central longitudinal axis" ('094 Patent Claims 7, 9–11, 13–20)	Plain and ordinary meaning.

See JCCPS, Docket No. 330 at 1-2 in *K-fee I*; JCCPS, Docket No. 74 in *K-fee II*. The parties' agreed constructions are accepted and binding. *See MyMail, Ltd. v. Am. Online, Inc.*, 476 F.3d 1372, 1377-78 (Fed. Cir. 2007) (rejecting appellate challenge to claim construction agreed to by party in district court).

B. Disputed Claim Terms

1. "an identifier" ('829 Patent, Claims 1,3, 5, 12, and 14; '722 Patent, Claims 1, 9, and 13-20; '923 Patent, Claims 1 and 6; '430 Patent, Claim 7; '491 Patent, Claims 1, 6-8, and 10)

K-fee's Construction	Nespresso's Construction
Plain and ordinary meaning	"feature that individualizes the portion capsule"

The parties dispute the meaning of the term "identifier," used in the '829 and '722 Patents, and "individualization identifier," used in the '830, '094, and '910 Patents. Docket No. 84 in *K-fee III* at 4-5; Docket No. 85 in *K-fee III* at 6-7. Nespresso argues that both the "identifier" and "individualization identifier" must individualize capsules so the beverage machine can determine whether the capsule is compatible. Docket No. 84 at 4-5.

The claim language clarifies that the purpose of the identifier is to confirm the capsule is compatible with the coffee maker. In other words, the hot water does not begin to flow unless the machine recognizes the capsule via its "identifier" or "individualization identifier." Claim 1 of the '829 Patent discloses "a portion capsule comprising . . . an identifier provided on the bottom side of the rim." '829 Patent, Claim 1. The claim further discloses that an "insertion shaft" enables a "sensor/detector" of a beverage machine to detect the identifier. *Id.* It further discloses "a pump controlled to supply hot water into the portion capsule only upon detection of the identifier by the sensor/detector ***and a determination by the beverage machine that the portion capsule is suitable for use with the beverage machine***." *Id.* (emphasis added). Claim 1 of each of the other patents discloses similar limitations. '722 Patent, Claim 1 (disclosing "a pump controlled to push water into the portion capsule only upon a determination that the read optically detectable identifier agrees with a stored reference."); '094 Patent, Claim 1 (disclosing similar limitation to '722 Patent except "barcode" replaces "identifier."); '830 Patent (disclosing "the optically detectable individualization identifier is configured to be read by a sensor/detector of a beverage machine to individualize the portion capsule and to activate a pump of the beverage machine."); '910 Patent, Claim 1 (disclosing that "the individualization identifier . . . is further compared to a stored reference to determine if the portion capsule is suitable for the specific coffee machine.")

The specification confirms this understanding. The specification discloses optional

functions of the "identifier" or "individualization identifier."[1] For instance, it discloses using the identifier to control brewing parameters, like temperature, pressure, and amount of water. '829 Patent at 3:26-30; *see also* 5:60-65. Still, one mandatory purpose is clear. The identifier " allows to individualize the respective portion capsule." '829 Patent at 1:34-35; *see also id*. at 1:61-62 (similar). In the Court's view, the language "allows to individualize" is a poor drafting effort, but the specification goes on to clarify the meaning of this language. It discloses:

> In the context of this invention individualizing means that the respective portion capsule can be assigned to a group of capsules that are suitable for the coffee machine preferably. It is not necessary that the coffee machine is able to specify and/or identify the portion capsule. In fact, it is much more important that the coffee machine associates the portion capsule with a group of portion capsules, which is suitable for the coffee machine. In particular, individualizing means that those portion capsules that are not appropriate for the coffee machine cannot be inserted into and/or directly fall through the holder, which is designed for the portion capsules in the coffee machine, and/or the coffee machine operates only with the corresponding portion capsules. Preferably a sensor/detection system handles the identifier and compares it with a stored reference substantially. Preferably, the coffee machine, in particular the water-providing-pressure pump, will be activated if the detected identifier matches with the reference Otherwise, the coffee machine will not start operating.

'829 Patent at 1:63-2:14; *see also* 5:27-38. Thus the machine uses the "identifier" or "individualization identifier," to determine that capsules are compatible with the machine. The way that patent accomplishes this purpose may vary across embodiments. For instance, in the gearwheel embodiment, mechanical means in the media chute prevent a user from inserting an incompatible capsule into the machine. *Id.* at 2:22-27. Other embodiments involve comparing an identifier with a stored reference. *See e.g.*, '910 Patent, Claim 1.

For the foregoing reasons, the Court would construe both "identifier" and "individualization identifier" to mean "an element used to determine whether portion capsules are suitable for the machine." This construction gives purpose to the claimed invention. '829 Patent at 1:22-24 ("The object of the present invention is therefore to provide a portion capsule which only is suitable for a specific coffee machine.") Constructions should be consistent with the purpose of the claimed invention. *See Virnetx, Inc. v. Cisco Sys., Inc.*, 767 F.3d 1308, 1318 (Fed. Cir. 2014). The construction is somewhat consistent with Nespresso's proposal; however, the

[1] Because the patents share a common specification, the Court cites to the '829 Patent unless otherwise indicated.

Court would decline to use the word "individualizes" due to the potential for jury confusion.

The fact that the patents disclose other purposes for the identifier, like controlling water pressure and temperature, does not mean this construction is incorrect. The claims at issue use open transition terms, like comprising. Thus, an identifier must at least be used to determine compatibility but it may also be used for other features. The construction does not read out these embodiments. Moreover, K-fee's claim differentiation argument is not persuasive. First, it is not clear that claim differentiation applies across different patents, though the Court acknowledges that these patents share a common specification. In any event, "[c]laim differentiation is a guide, not a rigid rule. If a claim will bear only one interpretation, similarity will have to be tolerated." *Laitram Corp. v. Rexnord, Inc.*, 939 F.2d 1533, 1538 (Fed. Cir. 1991) (quoting *Autogiro Co. of Am. v. United States*, 384 F.2d 391, 404 (Ct. Cl. 1967)).

2. "to individualize the portion capsule" ('830 Patent, Claims 1 & 8; '910 Patent, Claim 1; and '923 Patent, Claim 1)

K-fee's Construction	Nespresso's Construction
Plain and ordinary meaning	"to determine whether the respective portion capsule is suitable for use with the beverage machine such that the use of unsuitable capsules is prevented"

The parties dispute whether "to individualize the respective single serve capsule" means that the identifier must determine whether the capsule is suitable for use with the beverage machine. Docket No. 84 at 8; Docket No. 85 at 10-11. The construction relates to the above discussion.

The specification defines "individualizing" an identifier. It discloses "the portion capsule has an identifier that allows to individualize the respective portion capsule." '829 Patent at 1:61-63. "[I]ndividualizing means that the respective portion capsule can be assigned to a group of capsules that are suitable for the coffee machine preferably." *Id.* at 1:64-66. It further discloses "the coffee machine associates the portion capsule with a group of portion capsules, which is suitable for the coffee machine." *Id.* at 2:1-3. The word "means" indicates a clear intent to define a term. *3M Innovative Properties Co. v. Avery Dennison Corp.*, 350 F.3d 1365, 1369-71 (Fed. Cir. 2003).[2] Here, the first instance of "means" indicates a definition. Individualize means "associating portion capsules with a group of portion capsules that are suitable for the machine."

[2] *Merck & Co., Inc. v. Teva Pharms. USA, Inc.* is not persuasive at least because it addressed the term "about" instead of "means." 395 F.3d 1364, 1369 (Fed. Cir. 2005).

Later instances of "means," indicated by the phrase "in particular," disclose particular embodiments. For instance, in one embodiment, "individualizing" means allowing portion capsules that are not fit for the coffee machine to fall through the holder. '829 Patent at 2:3-9. This is consistent with the above discussion concerning "identifier" and "individualization identifier."

For the foregoing reasons, the Court would construe "to individualize the respective single serve capsule" to mean "associating portion capsules with a group of portion capsules that are suitable for the machine."

3. "a groove that is laterally offset from the chamfered mandrel" ('491 Patent, Claims 1, 7, and 10; '094 Patent, Claims 1 and 12; '829 Patent, Claim 4)

K-fee's Construction	Nespresso's Construction
Plain and ordinary meaning	"a groove that is at least partially off to the side of any part of the chamfered mandrel"

The parties dispute whether the groove must be entirely offset from the chamfered mandrel. Docket No. 335 at 8 in *K-fee I*; Docket No. 336 at 4-5 in *K-fee I*.

The claim language discloses a groove completely off to the side of the chamfered mandrel. Claim 1 of the '491 Patent discloses "a groove that is laterally offset from the chamfered mandrel." '491 Patent, Claim 1. This language does not say offset from a portion of or an axis of the mandrel. In other limitations, the applicant uses more specific language to describe positioning. For instance, Claim 1 discloses, "a chamfered mandrel that is configured to pierce the cover at the location that is offset from the central longitudinal axis." *Id.* Thus, the applicant chose different words to describe the offset of the piercing location (relative to the central longitudinal axis of the base element of the capsule) and the groove offset (laterally). This suggests that "laterally offset" means completely off to the side because the patentee did not specify any axis relationship. *Phillips*, 415 F.3d at 1314-15 ("Differences among claims can also be a useful guide in understanding the meaning of particular claim terms.") (citations omitted).

Claim 1 also discloses, "a seal that is at least partially seated in the groove and configured to bear against a top side of the cover in a region between a peripheral edge of the cover and the region of the cover that is pierced by the chamfered mandrel." Here, the applicant used the term "at least partially" to describe the position of the groove but did not use the same language to

describe the lateral offset. Again, this creates a presumption that the offset is not "partial."[3]

The specification confirms that "laterally offset" means completely off to the side. FIG. 16A shows an example of a pierced beverage capsule:

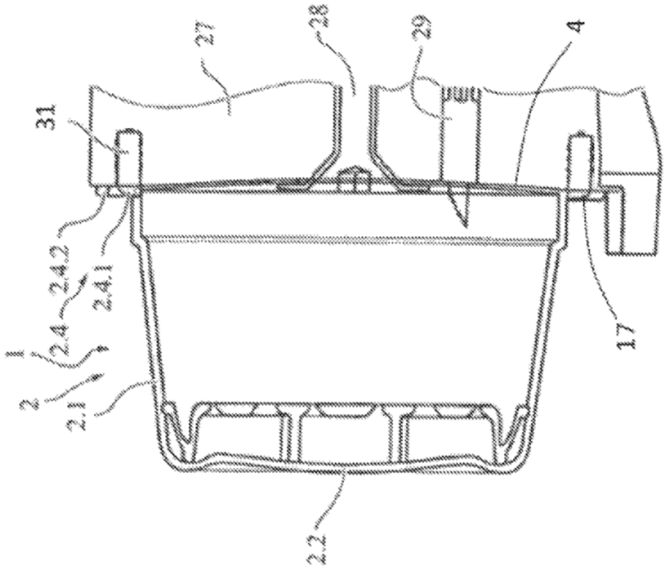

'491 Patent, FIG. 16A (showing seal 31 and mandrel 29). Though the groove is not labeled, the claims disclose that the seal sits at least partially in the groove. This provides an approximate location of the groove around the seal. As shown, the groove is completely to the side of the mandrel and does not overlap with the mandrel. Though FIG. 16A discloses only one embodiment, the combination of this figure and the claim language confirms that the groove is completely offset from the mandrel. The specification explains the purpose of the seal and the piercing position:

> Preferably, it is provided that the edge region has a sealing surface **2.4.1,** which sealingly interacts with the seal **31** attached to the brewing chamber **27,** on the interior side of the gearwheel. The seal **31** makes sure that the water coming from a water inlet **28** flows through the portion capsule by passing an opening, which has been made by a mandrel **29,** than around it.

Id. at 10:28-34. A broad construction that allows overlap between the groove, in which the seal at least partially sits, and the mandrel could frustrate these sealing and water direction features.

Finally, the Patent Trial and Appeal Board ("PTAB") found that the groove is completely

[3] The Court does not make much of K-fee's statements during the IPR proceeding that "there is nothing in that claim language about a central axis. There's nothing in that that sort of limits what 'laterally offset from' is." IPR Hearing Tr., Docket No. 336-9 at 30:23-25. K-fee merely confirmed that the claim language does not disclose a "central longitudinal axis" or a "partial" offset for the groove and mandrel relationship.

off to the side of the mandrel:

> In view of the intrinsic evidence of the '094 patent, we determine that, on this record, the claim phrase "a groove that is laterally offset from the chamfered mandrel" requires that the groove be entirely "off to the side" of any part of the chamfered mandrel.

Final Written Decision, Docket No. 335-11 at 13.[4] While the PTAB's decision is not binding, "the Court may also derive benefit from the PTAB's claim construction for the patents under review." *Black Hills Media, LLC v. Pioneer Elecs. (USA) Inc.*, No. CV 14-00471 SJO PJWX, 2014 WL 4638170, at *6 (C.D. Cal. May 8, 2014); *see also MyMail, Ltd. v. IAC Search & Media, Inc.,* 2020 WL 1043659 at *6 (N.D. Cal. Mar. 4, 2020) (finding that "[a]lthough these [PTAB Final Written] [D]ecisions are not binding, the Court nonetheless recognizes these prior [claim] constructions as persuasive authority.")

For the foregoing reasons, the Court would not apply Nespresso's broadened construction. Laterally offset means the "groove is entirely off to the side of any part of the chamfered mandrel."

4. "the base element being symmetrical about a central longitudinal axis" ('829 Patent, Claims 1 and 12; '830 Patent, Claims 1 and 8; '910 Patent, Claims 1 and 8; and '491 Patent, Claims 1, 7 and 10)

K-fee's Construction	Nespresso's Construction
Plain and ordinary meaning	"base element is symmetrical with respect to any plane containing the longitudinal axis"

The parties dispute whether "symmetrical about a central longitudinal axis" requires symmetry at all points along the central longitudinal axis. Docket No. 93 *K-fee III* at 17; Docket No. 82 *K-fee III* at 16.

The written description does not define or even use the term "symmetrical about a central longitudinal axis." Rather, the term appears only in the claims, which also do not disclose any special definition. Accordingly, plain and ordinary meaning applies. *See Phillips v. AWH Corp.*, 415 F.3d 1303, 1312 (Fed. Cir. 2005) ("[W]ords of a claim are generally given their ordinary and customary meaning.'") Still, the Court must resolve the parties' dispute.

Nespresso argues that several embodiments support its construction. Docket No. 84 at 17. For instance, Nespresso argues that FIGs. 3A-3B "depict[] a capsule with a base element having

[4] The parties agree that this term should be interpreted consistently across the '491, '094, and '829 Patents.

annular 'recesses and bulges 7, 8' that can 'interact with a means for detection 13,' no matter how the capsule is rotated around its central longitudinal axis in the brewing chamber." While the figures do show capsules with this kind of symmetry, Nespresso does not cite any portion of the specification disclosing the purported advantage. Moreover, the fact that these embodiments show circular symmetry does not support limiting "symmetrical about a central longitudinal axis" in the way Nespresso contends. *See Phillips v. AWH Corp.*, 415 F.3d 1303, 1323 (Fed. Cir. 2005) ("[W]e have expressly rejected the contention that if a patent describes only a single embodiment, the claims of the patent must be construed as being limited to that embodiment.").

Both parties make arguments concerning the "gearwheel embodiment." '829 Patent at 6:11-25; *see also id*. at 10:24-40 and FIGs. 17a-c. Nespresso admits that its proposed construction reads out the gearwheel embodiment but argues the construction is acceptable because certain claims cover certain embodiments but not others. Docket No. 92 at 17. The authority Nespresso cites is not on point here. In *Aug. Tech. Corp. v. Camtek, Ltd.*, the Court reasoned:

> The mere fact that there is an alternative embodiment disclosed in the [asserted patent] that is not encompassed by [our] claim construction does not outweigh the language of the claim, especially when the court's construction is supported by the intrinsic evidence.

655 F.3d 1278, 1285 (Fed. Cir. 2011) (quoting *TIP Sys., LLC v. Phillips & Brooks/Gladwin, Inc.*, 529 F.3d 1364, 1373 (Fed.Cir.2008)). Here, however, the claim language does not support limiting the claims to only certain embodiments in the way Nespresso contends. Accordingly, the Court declines to apply Nespresso's construction on this basis. *Vitronics Corp. v. Conceptronic, Inc.*, 90 F.3d 1583, 1582 (Fed. Cir. 1996) "[A]n interpretation [that excludes a preferred embodiment] is rarely, if ever, correct and would require highly persuasive evidentiary support."). Nespresso's proposed construction cannot be correct because it reads out an embodiment. The Court need not consider the extrinsic evidence.

For the foregoing reasons, the Court would not adopt Nespresso's proposed construction. Plain and ordinary meaning would apply.

5. "repeat pattern" ('094 Patent, Claims 1 and 12; '722 Patent, Claims 14-16; '910 Patent, Claims 1 and 8; and '491 Patent, Claims 1, 7, and 10)

K-fee's Construction	Nespresso's Construction
Plain and ordinary meaning	Indefinite

The parties dispute whether "repeat pattern" is indefinite. Docket No. 84 at 18 in *K-fee III*; Docket No. 85 at 19 in *K-fee III*. K-fee argues the specification provides insufficient context to understand the scope of this term. Docket No. 84 at 18. Nespresso argues a person of ordinary skill would understand "repeat pattern" to simply mean a pattern that repeats. Docket No. 85 at 21.

The specification provides sufficient context to understand "repeat pattern." Here, the claims disclose that "the individualization identifier . . . includes an optically detectable, machine readable, repeat pattern." '910 Patent, Claims 1, 8; *see also* '094 Patent, Claims 1, 12 and '722 Patent, Claim 14-16. The specification discloses:

> Preferably the identifier is a machine-readable imprint. This is realized with a print in food approved color, preferably. Fluorescent materials like paper or print materials, whose optical properties change under the influence of temperature, are favored also. Preferably the print is a barcode, a logo or a repeat pattern.

'910 Patent at 3:3-8. The '094 Patent also describes the identifiers as "optically detectable material." '094 Patent at 2:65-67. The "repeat pattern" may be located on "the bottom side of the flange." '094 Patent, Claims 1 and 12; '491 Patent, Claims 7 and 10. For instance, FIG. 2A of the '094 Patent discloses a ring of lines on the bottom side of the flange 17:

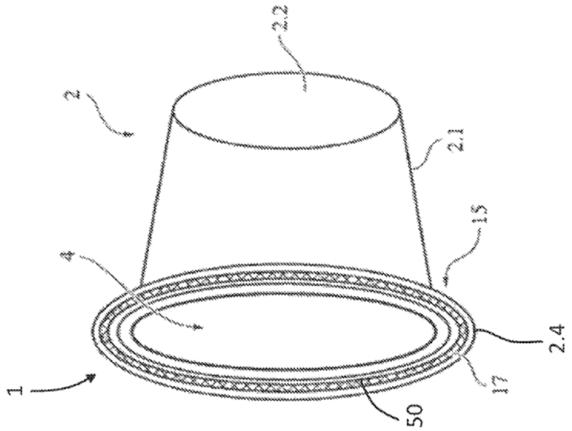

'094 Patent, FIG. 2A. This depiction of the repeat pattern is consistent with the plain and ordinary meaning that K-fee propose –" a group of elements [that] repeat themselves as the pattern extends." Docket No. 85 at 22. The specification provides other examples of repeat patterns, including teeth of various shapes. *See* '910 Patent at 4:18-8 and 10:29-53.

In FIG. 2A, reference numeral 50 does indicate a barcode, as opposed to a repeat pattern. '094 Patent at 8:48. Still, "repeat pattern" and "barcode" need not be mutually exclusive

in the way Nespresso contends. *See* Docket No. 84 at 18. Also, *IBSA Institut Biochimique, S.A. v. Teva Pharms. USA, Inc.* does not apply here. 966 F.3d 1374, 1379 (Fed. Cir. 2020) (finding term "half liquid" indefinite because it did not retain clear independent meaning apart from "gel" or "paste.") Unlike "half liquid," repeat pattern has an ordinary, understandable definition and the specification provides examples of a repeat pattern, consistent with this definition, in the optical detection context, applicable here.

Finally, Nespresso's argument that "repeat pattern" is indefinite due to an unspecified amount of repetition is not persuasive here. *See* Docket No. 84 at 19-20. Nothing suggests "repeat pattern is a term of degree.

For the foregoing reasons, the Court would not find "repeat pattern" indefinite. Plain and ordinary meaning applies.

6. "insertion shaft" / "media chute" ('722 Patent Claims 1–24; '829 Patent Claims 1–19)

K-fee's Construction	Nespresso's Construction
Plain and ordinary meaning	"channel through which the portion capsule passes"

The parties dispute whether the terms "insertion shaft" and "media chute" require a passage to the brewing chamber. Docket No. 84 at 10; Docket No. 85 at 15-16. The Court already construed "media chute" in *K-fee I* and rejected Nespresso's proposal. Docket No. 111 in *K-fee I* at 23. Nespresso argues it raises additional considerations here and that the other Asserted Patents do not describe "media chute" in the Abstract. Docket No. 84 at 10. This argument is not persuasive. All of the patents are part of the same family and claim priority to a common parent. *See Trustees of Columbia Univ. in the City of New York v. Symantec Corp.*, 811 F.3d 1359, 1369 (Fed. Cir. 2016) ("where multiple patents 'derive from the same parent application and share many common terms, we must interpret the claims consistently across all asserted patents.'"). Accordingly, the Court construes "media chute" consistently across all Asserted Patents and would adopt the construction from *K-fee I*.

The only remaining issues is whether the Asserted Patents use the terms "insertion shaft" and "media chute" interchangeably. The Asserted Patents use these terms interchangeably. For instance, the '829 Patent discloses that "the mean for fit locking 24 is placed in the media chute or insertion shaft 26 of an insertion shaft housing 23 having a port for inserting the portion capsule in the coffee machine." *See* '829 Patent at 10:55-58. It identifies the same component (26) as

both the "insertion shaft" and the "media chute." *Id.*; *see also id.*, FIG. 18. Claim 1 of each of the '722 and '829 Patents also use the terms similarly. *Compare* '722 Patent, Claim 1 (disclosing "a media chute configured to receive and support the portion capsule") *with* '829 Patent, Claim 1 (disclosing "an insertion shaft configured to receive the portion capsule and to enable detection of the identifier"). The dependent claims of the '829 Patent narrow the scope of "insertion shaft." For instance, Claim 6 discloses "wherein the rim guides the portion capsule in the insertion shaft such that the portion capsule drops into the brewing chamber in a specific position." '829 Patent, Claim 6. However, this narrowing is entirely consistent with the discussion in *K-fee I*. The portion capsule may "pass through" the "media chute" or "insertion shaft" in one embodiment but the scope of the independent claims account for two other possibilities. *See* Docket No. 111 in *K-fee I* at 22-23.

For the foregoing reasons, the Court would apply plain and ordinary meaning, consistent with its construction for "media chute" in *K-fee I*.

V. <u>Conclusion</u>

For the reasons stated, the Court would construe the disputed terms as follows:

Term	Court's Construction
"identifier" / "individualization identifier"	"an element used to determine whether portion capsules are suitable for the machine"
"to individualize the respective single-serve capsule"	"associating portion capsules with a group of portion capsules that are suitable for the machine"
"a groove that is laterally offset from the chamfered mandrel"	"groove is entirely off to the side of any part of the chamfered mandrel"
"the base element being symmetrical about a central longitudinal axis [thereof]"	Plain and ordinary meaning
"repeat pattern"	Not indefinite; plain and ordinary meaning
"media chute" / "insertion shaft"	Plain and ordinary meaning