Trials@uspto.gov
Tel: 571-272-7822

Paper 38
Entered: February 18, 2021

UNITED STATES PATENT AND TRADEMARK OFFICE

BEFORE THE PATENT TRIAL AND APPEAL BOARD

WEBER, INC.,
Petitioner,

v.

PROVISUR TECHNOLOGIES, INC.,
Patent Owner.

IPR2019-01464
Patent 9,399,531 B2

Before MITCHELL G. WEATHERLY, FRANCES L. IPPOLITO, and JON M. JURGOVAN, *Administrative Patent Judges.*

WEATHERLY, *Administrative Patent Judge*.

JUDGMENT
Final Written Decision
Determining All Challenged Claims Unpatentable
35 U.S.C. § 318(a)

I. INTRODUCTION

A. BACKGROUND

Weber, Inc. ("Petitioner") filed a corrected petition[1] (Paper 13, "Pet.") to institute an *inter partes* review of claims 1–15 (the "challenged claims") of U.S. Patent No. 9,399,531 B2 (Ex. 1001, "the '531 patent"). 35 U.S.C. § 311. Provisur Technologies, Inc. ("Patent Owner") timely filed a Preliminary Response. Paper 7 ("Prelim. Resp."). On February 20, 2020, based on the record before us at the time, we instituted an *inter partes* review of all challenged claims on all grounds alleged as indicated in the table below. Paper 10 ("Institution Decision" or "Dec.").

Claim(s) challenged	35 U.S.C. §	References
1, 2, 4, 8	103	Recher,[2] Jordan[3]
3, 14	103	Recher, Jordan, Biforce[4]
6, 7	103	Recher, Jordan, Biforce, Gaskins[5]

[1] Petitioner's original petition contained citation errors when referring to portions of its primary prior art reference, and we instructed Petitioner to file an errata that corrected its citations to the prior art. Paper 10, 14–15, n.11. We also authorized Patent Owner to respond to the errata if it believed any corrections materially altered the evidence upon which Petitioner relied. *Id*. Petitioner filed the errata, Paper 13, and Patent Owner did not object to any corrections shown in the errata. Thus, we consider the errata to constitute the Petition for purposes of our analysis.

[2] German Published Patent App. DE 199 13 203 A1 (Ex. 1005, "Recher").

[3] U.S. Patent No. 3,848,757 (Ex. 1006, "Jordan").

[4] German Published Patent App. DE 41 25 539 A1 (Ex. 1007, "Biforce").

[5] U.S. Patent No. 4,000,865 (Ex. 1008, "Gaskins").

Claim(s) challenged	35 U.S.C. §	References
5	103	Recher, Jordan, Alexander[6]
9, 10	103	Recher, Jordan, Callan[7]
11–13	103	Recher, Jordan, Callan, Sykes[8]
15	103	Recher, Jordan, Brueckel[9]

After we instituted this review, Patent Owner filed a Patent Owner Response in opposition to the Petition (Paper 22, "PO Resp."). Petitioner filed a Reply in support of the Petition (Paper 28, "Reply"). Patent Owner filed a Sur-reply responding to the Reply (Paper 31, "Sur-reply"). Patent Owner did not move to amend any claim of the '531 patent.

We heard oral argument on November 18, 2020. A transcript of the argument has been entered in the record (Paper 37, "Tr.").

We have jurisdiction under 35 U.S.C. § 6. The evidentiary standard is a preponderance of the evidence. *See* 35 U.S.C. § 316(e) (2018); 37 C.F.R. § 42.1(d) (2019). This Final Written Decision is issued pursuant to 35 U.S.C. § 318(a) and 37 C.F.R. § 42.73.

For the reasons expressed below, we conclude that Petitioner has demonstrated by a preponderance of evidence that claims 1–15 are unpatentable.

---

[6] U.S. Patent No. 5,326,041 (Ex. 1009, "Alexander").

[7] U.S. Patent No. 5,678,484 (Ex. 1010, "Callan").

[8] U.S. Patent No. 2,860,462 (Ex. 1011, "Sykes").

[9] U.S. Published Patent App. No. 2003/0089209 A1 (Ex. 1012, "Brueckel").

B. RELATED PROCEEDINGS

The parties identified as a related proceeding the co-pending district court proceeding of *Provisur Technologies, Inc. v. Weber, Inc. et al*, Case No. 5-19-cv-06021 (W.D. Mo. filed February 22, 2019), which involves the ’531 patent along with U.S. Patent Nos. 8,322,537; 7,533,513; 7,065,936; 6,997,089; 6,669,005; and 6,320,141. Pet. 77; Paper 5, 2. Petitioner also filed another petition seeking *inter partes* review of the ’531 patent, which is designated IPR2019-01465. Paper 5, 2.

C. THE ’531 PATENT

The ’531 patent relates to a “web dispensing arrangement for interleaving sheets with sliced food product.” Ex. 1001, 2:10–12, 2:25–28. Figure 2 (reproduced below) “illustrates the sheet interleave apparatus 300,” which “includes a web material supply 301 such as a spool 306 for dispensing web material 312 from a roll 308.” *Id*. at 6:28–29, 6:35–37.

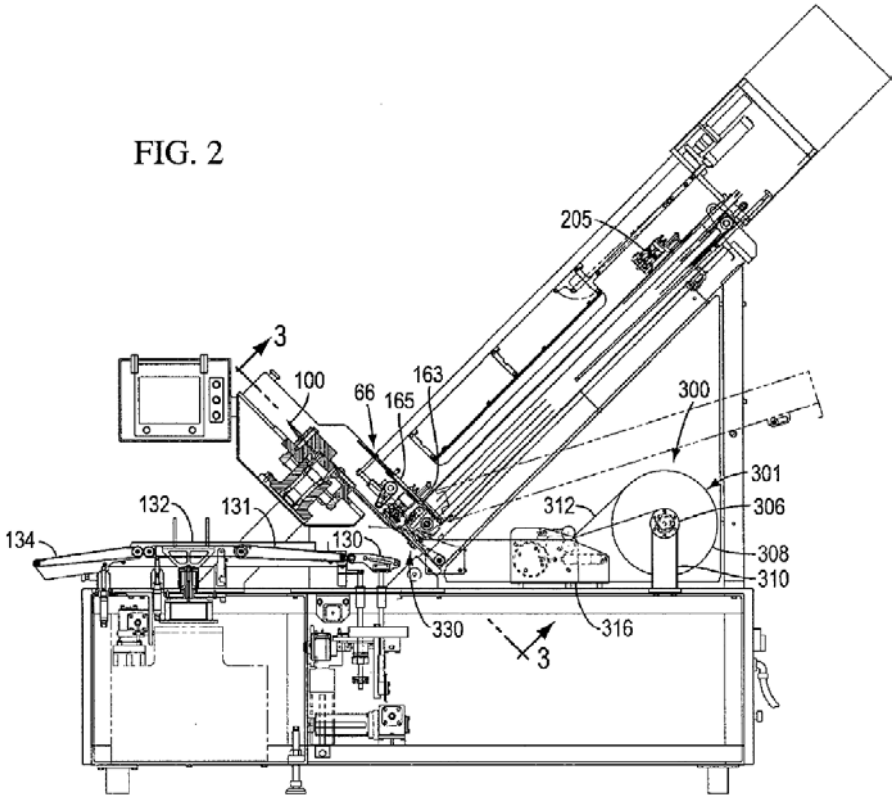

> Figure 2 is a diagrammatic sectional view of a slicing machine incorporating a sheet interleaving mechanism. *Id*. at 3:61–65.

"The web material 312 extends from the roll 308 and is threaded through a web material drawing station such as an unwind station 316" and then "into a feed station 330." *Id*. at 6:38–42. From the feed station, an extended end portion 312a of the web material is cut, along with a food loaf 470. *Id*. at 7:31–59.

The '531 patent also illustrates a tension control system in Patent Owner's colorized and annotated version of Figure 16, reproduced below.

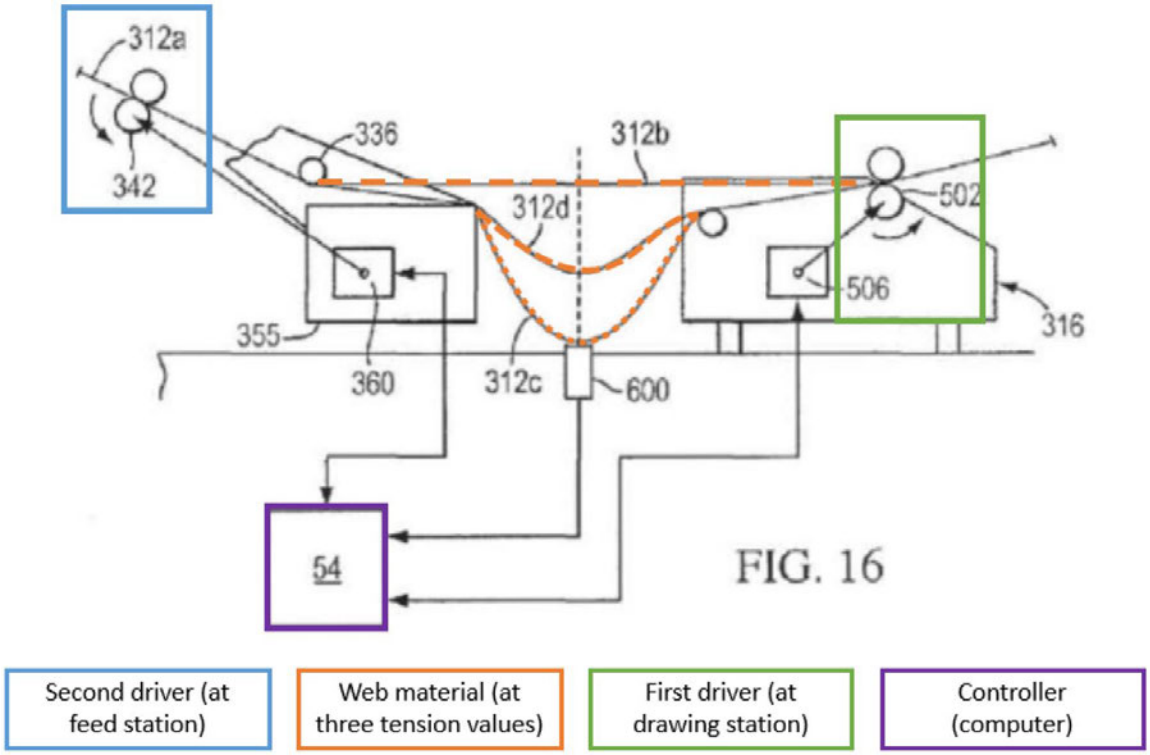

> Patent Owner's colorized and annotated version of Figure 16 of the '531 patent illustrates mechanisms for controlling tension in the web delivered as end portion 312a. Prelim. Resp. 11.

Between drawing station 316 and feed station 330 (unnumbered above but including servo 360), a "sensor 600 is used to sense the slackness . . . of the web material 312." Ex. 1001, 8:57–58. The Specification describes the

system for sensing and controlling tension between drawing station 316 and feed station 330 as follows:

> [S]ensor 600 is used to sense the slackness, or accumulation, of the web material 312 between the rollers 342 and 502. The sensor can be an ultrasonic sensor, an optical sensor, such as a laser or photoeye, or other type of sensor. The sensor 600 can project an ultrasonic or optical beam signal upwardly. The sensor 600 communicates the web material lowest position, for example the lowest positions on the line or curves 312b, 312c or 312d with the machine control or computer 54 which is in signal-communication with the servomotors 360, 506. If the slackness approaches the condition 312b, the motor 506 can be increased in speed to unwind material at a greater rate.
>
> If the slackness condition approaches condition 312c the motor 506 can be slowed. The speed of the motor 360 could also be adjusted in coordination with the slicing speed, if desired, to adjust the slackness.

Id. at 8:57–9:4.

Claims 1, 9, 14, and 15 are the independent claims among the challenged claims, and independent claim 1, which is illustrative, recites:

> 1. A sheet interleaver for a slicing machine that provides a slicing plane for slicing an elongated food product and a sheet from web material beneath said elongated product, comprising:
>
> [1.1] a supply of web material;
>
> [1.2] a drawing station having a first driver for drawing web material from said supply;
>
> [1.3] a feed station having a second driver for receiving web material from said drawing station and driving said web material through a cutting nip into said slicing plane;
>
> [1.4] a controller in signal-communication with said first and second drivers to drive web material at select differential speeds by said first and second drivers such that tension of the web material between said drawing station and said feed station is controlled; and

> [1.5] a non-contact sensor that senses tension of web material between said drawing station and said feed station and is in signal-communication with said controller to adjust the differential speed of said first and second drivers to maintain said tension within a pre-selected range.

Id. at 12:5–25 (with labels 1.1–1.5 added to aid discussion).

II. ANALYSIS

A. CLAIM INTERPRETATION

We interpret claims in the same manner used in a civil action under 35 U.S.C. § 282(b) "including construing the claim in accordance with the ordinary and customary meaning of such claim as understood by one of ordinary skill in the art and the prosecution history pertaining to the patent." 37 C.F.R. § 42.100(b) (2019).[10] When applying that standard, we interpret the claim language as it would be understood by one of ordinary skill in the art in light of the specification. *In re Suitco Surface, Inc.*, 603 F.3d 1255, 1260 (Fed. Cir. 2010). Thus, we give claim terms their ordinary and customary meaning as they would be understood by an ordinarily skilled artisan. *See In re Translogic Tech., Inc.*, 504 F.3d 1249, 1257 (Fed. Cir. 2007) ("The ordinary and customary meaning 'is the meaning that the term would have to a person of ordinary skill in the art in question.'" (quoting *Phillips v. AWH Corp.*, 415 F.3d 1303, 1313 (Fed. Cir. 2005)). Only terms that are in controversy need to be construed, and then only to the extent

[10] On October 11, 2018, the USPTO revised its rules to harmonize the Board's claim construction standard with that used in federal district court. Changes to the Claim Construction Standard for Interpreting Claims in Trial Proceedings Before the Patent Trial and Appeal Board, 83 Fed. Reg. 51,340 (Oct. 11, 2018) (now codified at 37 C.F.R. § 42.100(b) (2019)). This rule change applies to petitions filed on or after November 13, 2018. *Id*.

necessary to resolve the controversy. *Nidec Motor Corp. v. Zhongshan Broad Ocean Motor Co.*, 868 F.3d 1013, 1017 (Fed. Cir. 2017).

The parties dispute the meaning of two concepts, tension and selecting differential speeds that are reflected in at least some of the independent claims. Pet. 18–21; PO Resp. 23–24 (controlling tension), 37–38 (select differential speeds). We address each term as needed to resolve issues in dispute.

1. Tension (All Independent Claims)

The concept of tension and controlling or sensing tension is reflected in at least two portions of independent claim 1, limitations 1.4 and 1.5, which recite:

> [1.4] a controller in signal-communication with said first and second drivers to drive web material at select differential speeds by said first and second drivers such that *tension of the web material between said drawing station and said feed station is controlled*; and
>
> [1.5] a non-contact sensor that *senses tension of web material between said drawing station and said feed station* and is in signal-communication with said controller to adjust the differential speed of said first and second drivers to maintain said tension within a pre-selected range.

Ex. 1001, 12:16–25 (emphasis added).

Petitioner argues that we should interpret both limitations according to their ordinary and customary meaning, which includes controlling tension by "controlling the degree of slackness or accumulation of the web material between the drawing station and the feed station." Pet. 18–19 (citing Ex. 1001, 8:46–9:4, Fig. 16). Independent claims 9, 14, and 15 also recite controlling "tension of the web material between said drawing station and said feed station" in limitations that Patent Owner enumerates as 9.4, 14.4,

and 15.4. Prelim. Resp. 13–15, 22; *see also* Ex. 1001, 13:14–15 (claim 9), 14:17–18 (claim 14), 14:35–36 (claim 15). We agree with Petitioner's proposed interpretation of the claims as they relate to controlling tension.

The Specification expressly describes controlling tension of the web material between the claimed drawing station and feed station by sensing the degree of slackness of the web material in the space between these two stations. Ex. 1001, 8:46–9:4. The differential speeds of the "first and second drivers" recited in limitation 1.4 are controlled by the controller to manage the accumulation or slackness and tension of web material 312. Figure 16, which we reproduce below with our annotations, illustrates web material 312 (blue) passing from the claimed drawing station 316 (green)[11] to the claimed feed station 330 (red) and emerging as end portion 312a. Feed station 330 includes drive roller 342, *id*. at 6:44–48, and drawing station includes drive roller 502, *id*. at 7:60–62.

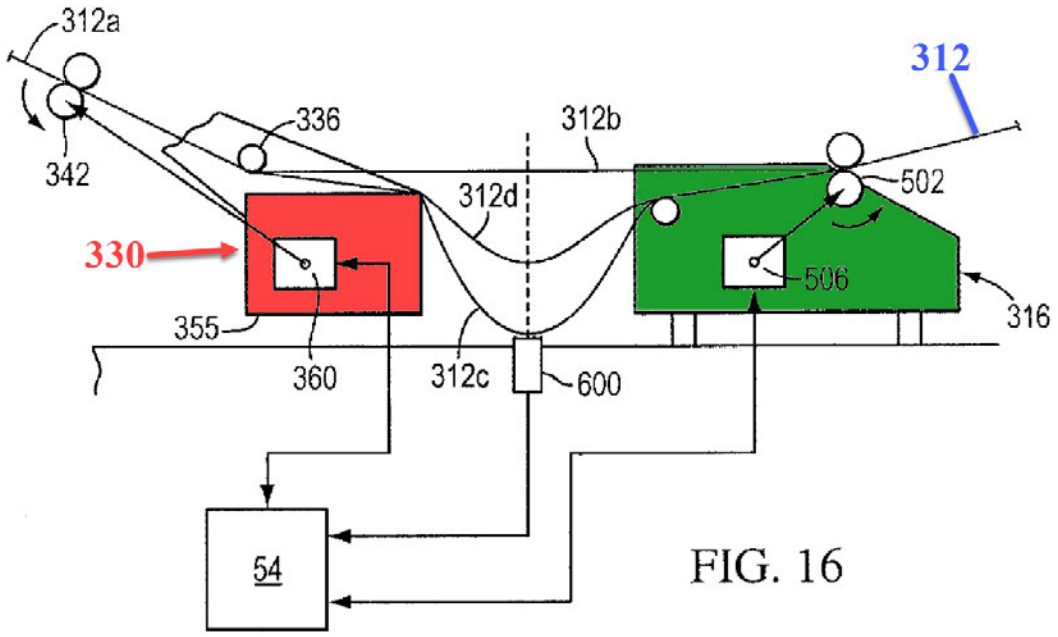

FIG. 16

[11] The Specification refers to "unwind station 316" as an example of a "drawing station," which is the term used in the claims. Ex. 1001, 6:38–41.

The figure schematically illustrates three different states of slackness in web material 312 (blue) between feed station 330 (red) and drawing station 316 (green) that are labeled as curves 312b, 312c, 312d. *Id*. at 8:46–48.

Too much (condition 312c) or too little (condition 312b) slackness in web material 312 hampers the delivery of end portion 312a to other processes upstream of roller 342. *Id*. at 8:48–53. "The line 312b representing zero accumulation, and the parabola 312c representing maximum accumulation, represent the desired limits of operation. The intermediate parabola 312d represents a preferred operating condition." *Id*. at 8:53–56. "[S]ensor 600 is used to sense the slackness, or accumulation, of the web material 312 between the rollers 342 and 502." *Id*. at 8:57–58.

> The sensor 600 communicates the web material lowest position, for example the lowest positions on the line or curves 312b, 312c or 312d with the machine control or computer 54 which is in signal-communication with the servomotors 360, 506. If the slackness approaches the condition 312b, the motor 506 can be increased in speed to unwind material at a greater rate. If the slackness condition approaches condition 312c the motor 506 can be slowed. The speed of the motor 360 could also be adjusted in coordination with the slicing speed, if desired, to adjust the slackness.

Id. at 8:61–9:4. Thus, tension in web material 312 is wholly controlled by adjusting the speed of at least the drive rollers in the drawing station to ensure that the lowest portion of web material 312 remains between conditions 312b and 312c. Optionally, the drive rollers in the feed station may also be used to control the tension in the web.

We agree with Petitioner's contention that controlling the tension as recited in limitations 1.4 and 1.5 may be performed by "controlling the degree of slackness or accumulation of the web material between the

drawing station and the feed station." Pet. 18. Such control of tension is precisely the mechanism illustrated in Figure 16 and described in its accompanying text. Ex. 1001, 8:46–9:4, Fig. 16.

2. Select Differential Speeds (All Independent Claims)

All independent claims recite a controller that is configured to "drive web material at select differential speeds by said first and second drivers." Ex. 1001, 12:16–18 (claim 1), 13:12–13 (claim 9), 14:14–16 (claim 14), 14:32–34 (claim 15). Claim 1 also refers to "said controller to adjust the differential speed of said first and second drivers." *Id*. at 12:23–25. Petitioner argues that adjusting the differential speed of the first and second drivers may be accomplished by "adjusting the speed of only one of the drivers." Pet. 20 (citing Ex. 1001, 8:65–9:2). In our Institution Decision, we preliminarily interpreted "'select differential speeds' to refer simply to at least two different relative speeds between the first and second drivers." Dec. 13.

Patent Owner argues that our "preliminary interpretation is incomplete because it reads out the 'select' claim limitation." PO Resp. 37. Patent Owner contends we should "clarify that 'select differential speeds' refers to at least two different relative speeds *that are selected by the controller* between the first and second drivers." *Id*. at 37–38.

Petitioner responds that Patent Owner's interpretation is inconsistent with the '531 patent to the extent that the interpretation requires that the controller select specific speeds or "even know" a differential speed. Reply 15–16. We agree because the Specification expressly describes adjusting the differential speed of rollers 502 and rollers 342 merely by changing the speed of motor 506, which drives rollers 502, and only

optionally adjusting the speed of motor 360, which drives rollers 342. Ex. 1001, 8:65–9:4. The Specification does not indicate that its controller selects certain speeds, but only that speeds are "increased" or "slowed." *Id*. Patent Owner's citation to a general statement that the "servomotor drives the web material in a closely controlled and precise manner" similarly fails to establish that the controller must send a signal selecting a specific roller speed. *See* PO Resp. 40 (quoting Ex. 1001, 3:27–29).

Petitioner argues that the "prosecution history focuses on this same gross motor speed adjustment." Reply 16 (citing Ex. 1002, 317, 537). Patent Owner counters that the prosecution history "emphasizes multiple times that the controller selects the differential speed." Sur-reply 7 (citing Ex. 1002, 471, 537, 539, 541). Based on our review of the cited portions of the prosecution history, we determine that the cited portions fail to establish that "select differential speeds" requires that the claimed controller select specific speeds. The most detailed of the cited comments focus only upon the "differential speed" of the rollers that is controlled by increasing or reducing the speed of the "feeding servomotor," which drives feed rollers 502, to alter the amount of "slack in the web material." Ex. 1002, 537. The cited passages merely cite, state, or paraphrase portions of the Specification that are already discussed above. *Compare id*. at 317, 471, 537, 539, 541, *with* Ex. 1002, 3:27–29, 8:65–9:4. Accordingly, we determine that none of the cited statements supplies any information beyond the Specification about the types of signals that the controller sends to the drive rollers or specifies that the controller must "select" a specific differential speed.

For all the reasons expressed above and in our Institution Decision, we agree with Petitioner and maintain our preliminary interpretation that "select differential speeds" refers at least two different relative speeds between the first and second drivers.

B. THE PARTIES' POST-INSTITUTION ARGUMENTS

In our Institution Decision, we concluded that the argument and evidence adduced by Petitioner demonstrated a reasonable likelihood that claims 1–15 were unpatentable as obvious based on the challenges identified in the table in Part I.A above. Dec. 24–25. We must now determine whether Petitioner has established by a preponderance of the evidence that the specified claims are unpatentable over the cited prior art. 35 U.S.C. § 316(e) (2018). We previously instructed Patent Owner that "any arguments for patentability not raised in the [Patent Owner Response] may be deemed waived." Paper 12, 8; *see also In re Nuvasive, Inc.*, 842 F.3d 1376, 1381 (Fed. Cir. 2016) (holding that patent owner's failure to proffer argument at trial as instructed in scheduling order constitutes waiver). Additionally, the Board's Trial Practice Guide states that the Patent Owner Response "should identify all the involved claims that are believed to be patentable and state the basis for that belief." Office Patent Trial Practice Guide, 77 Fed. Reg. 48,756, 48,766 (Aug. 14, 2012).

C. LEGAL STANDARDS

Petitioner challenges the patentability of claims 1–15 on the grounds that the claims are obvious. To prevail in its challenges to the patentability of the claims, Petitioner must establish unpatentability by a preponderance of the evidence. 35 U.S.C. § 316(e); 37 C.F.R. § 42.1(d). "In an [*inter partes* review], the petitioner has the burden from the onset to show with

particularity why the patent it challenges is unpatentable." *Harmonic Inc. v. Avid Tech., Inc.*, 815 F.3d 1356, 1363 (Fed. Cir. 2016) (citing 35 U.S.C. § 312(a)(3) (requiring *inter partes* review petitions to identify "with particularity . . . the evidence that supports the grounds for the challenge to each claim")). This burden never shifts to Patent Owner. *See Dynamic Drinkware, LLC v. Nat'l Graphics, Inc.*, 800 F.3d 1375, 1378 (Fed. Cir. 2015) (citing *Tech. Licensing Corp. v. Videotek, Inc.*, 545 F.3d 1316, 1326–27 (Fed. Cir. 2008)) (discussing the burden of proof in *inter partes* review).

The Supreme Court in *KSR International Co. v. Teleflex Inc.*, 550 U.S. 398 (2007), reaffirmed the framework for determining obviousness as set forth in *Graham v. John Deere Co*., 383 U.S. 1 (1966). The *KSR* Court summarized the four factual inquiries set forth in *Graham* that we apply in determining whether a claim is unpatentable as obvious under 35 U.S.C. § 103(a) as follows: (1) determining the scope and content of the prior art, (2) ascertaining the differences between the prior art and the claims at issue, (3) resolving the level of ordinary skill in the pertinent art, and (4) when in evidence, considering objective evidence indicating obviousness or nonobviousness. *KSR*, 550 U.S. at 406 (citing *Graham*, 383 U.S. at 17–18). In an *inter partes* review, Petitioner cannot satisfy its burden of proving obviousness by employing "mere conclusory statements." *In re Magnum Oil Tools Int'l, Ltd.*, 829 F.3d 1364, 1380 (Fed. Cir. 2016).

Petitioner must explain how the proposed combinations of prior art would have rendered the challenged claims unpatentable. An obviousness analysis "need not seek out precise teachings directed to the specific subject matter of the challenged claim, for a court can take account of the inferences and creative steps that a person of ordinary skill in the art would employ."

KSR, 550 U.S. at 418; *accord Translogic*, 504 F.3d at 1259. However, Petitioner cannot satisfy its burden of proving obviousness by employing "mere conclusory statements," but "must instead articulate specific reasoning, based on evidence of record" to support an obviousness determination. *Magnum Oil*, 829 F.3d at 1380–81. Petitioner also must articulate a reason why a person of ordinary skill in the art would have combined the prior art references. *NuVasive*, 842 F.3d at 1382.

At this final stage, we determine whether a preponderance of the evidence of record shows that the challenged claims would have been rendered obvious in view of the asserted prior art. We analyze the asserted grounds of unpatentability in accordance with these principles.

D. LEVEL OF ORDINARY SKILL

We review the grounds of unpatentability in view of the understanding of a person of ordinary skill in the art at the time of the invention. *Graham*, 383 U.S. at 17. Petitioner submits that the ordinarily skilled artisan would have had

> (1) a bachelor's degree (or equivalent) in mechanical engineering (or a similar field) and at least two years of experience working on food processing and/or packaging systems (or in a similar field); or (2) at least seven years of experience working on food processing and/or packaging systems (or in a similar field).

Pet. 17–18 (citing Ex. 1003 ¶ 38). Petitioner also contends that an ordinarily skilled artisan "may have worked as part of a multidisciplinary team and drawn upon not only his or her own skills, but of others on the team, *e.g.*, to solve a given problem." *Id*. at 18 (citing Ex. 1003 ¶ 39).

Patent Owner does not address the level of ordinary skill or contest Petitioner's framing of the level of ordinary skill. *See generally* PO Resp. For purposes of this Decision, we adopt Petitioner's proposal because

Petitioner's proposed definition is consistent with the level of skill demonstrated in the cited prior art references. *See Okajima v. Bourdeau*, 261 F.3d 1350, 1355 (Fed. Cir. 2001).

E. CLAIMS 1, 2, 4, AND 8:
OBVIOUSNESS IN VIEW OF RECHER AND JORDAN

Petitioner argues that the combined teachings of Recher and Jordan render claims 1, 2, 4, and 8 unpatentable as obvious. Pet. 23–41. Claim 1 is independent and claims 2, 4, and 8 each directly depend from claim 1. Ex. 1001, 12:5–67. Patent Owner presents arguments that Petitioner's challenge to independent claim 1 fails, but presents no distinct arguments against Petitioner's challenge to dependent claims 2, 4, and 8. *See* PO Resp. 22–54 (not presenting arguments solely directed to dependent claims 2, 4, and 8). As explained below, we determine that Petitioner has proven by a preponderance of evidence that the combined teachings of Recher and Jordan render claims 1, 2, 4, and 8 unpatentable as obvious.

1. Independent Claim 1

Petitioner argues that Recher and Jordan collectively render claim 1 obvious. Pet. 23–37.

a. Recher

Recher "relates to a device for the insertion of an insert paper between a first and second slice of sliced foodstuffs, such as sausage or cheese." Ex. 1005, Abstract, 1:3–5. "The purpose of inserting an insert paper, which is also described as an interleaver paper, is that sliced foodstuff products such as sausage slices or cheese slices can be more easily separated in a packaging." *Id*. at 1:11–14. Petitioner's annotated version of Recher's Figure 1 reproduced below, illustrates that Recher's "cutting knife is not

only used for the separating of the foodstuff slices, but simultaneously serves to separate the insert paper from the supply roll." *Id*. at 4:29–31.

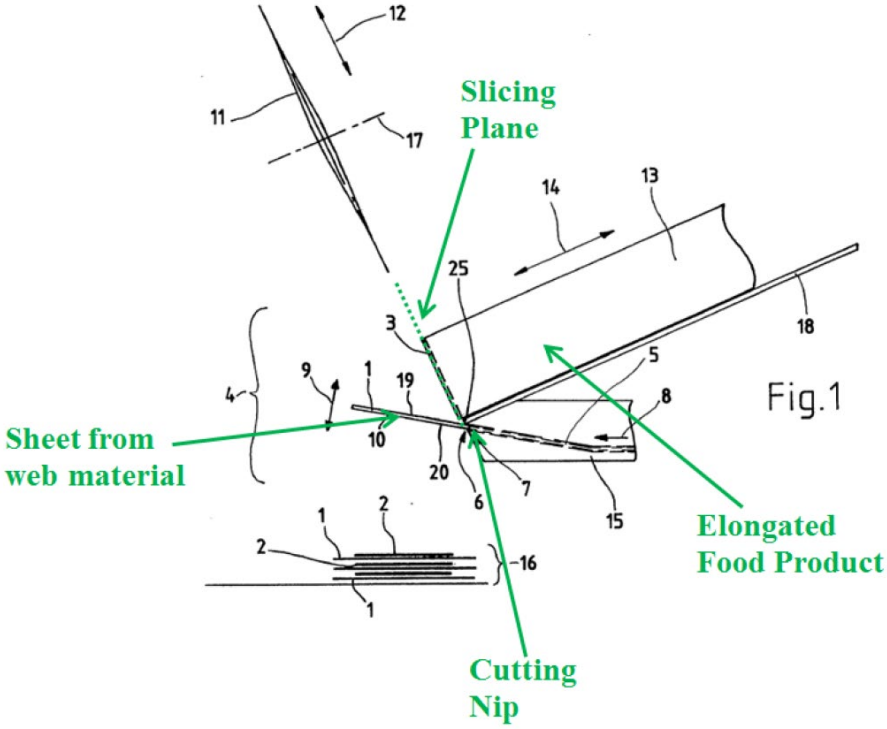

Petitioner's annotated version of Recher's Figure 1 illustrates a device for cutting food with a mechanism for interleaving paper between the slices of food. *Id*. at 4:40–46.

Recher indicates that "[a]n additional unit as the separating device and its necessary control is thereby omitted." *Id*. at 4:31–33. Cutting knife 11 moves in direction 12 within the identified slicing plane to first cut food product 13 and then paper 1. *Id*. at 4:47–52. The resulting sliced food with interleaved pieces of paper falls into stack 16. *Id*. at 4:59–5:5.

b. Jordan

Jordan generally "relates to a method of forming stacks of food slices with an accurate form." Ex. 1006, 1:5–6. "A further feature of the invention enables sheets of paper to be interleaved between the individual slices." *Id*. at 1:53–57. Jordan explains that "sheets of paper can be placed between the

individual slices" by being "pushed forward horizontally into the path of the slices being released downwards . . . and cut off from [the] delivery web when the falling slice touches the paper." *Id*. at 2:43–49. We reproduce the pertinent portion of Jordan's Figure 1 below, which illustrates Jordan's system and method of forming stacks of sliced food and interleaved paper.

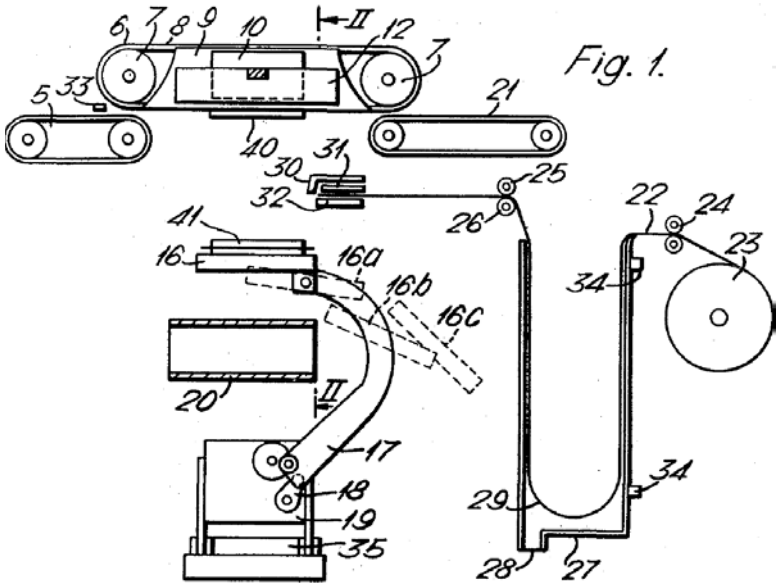

Jordan's Figure 1 is a side view of a system for interleaving slice food with paper and collecting the slices in stack 41.

Slice 40 enters Jordan's device at the top left of the Figure via conveyor 5 and is picked up by suction on the lower surface of conveyor 6 and then dropped onto stack 41. *Id*. at 4:1–17. Take-up rollers 24 pull paper from a roll 23, which is eventually conveyed to paper cutter 30 for cutting into individual sheets. *Id*. at 5:30–33. Before reaching feed rollers 25, 26, paper 23 is drawn by vacuum into shaft 27 to form loop 29. *Id*. at 5:47–6:3. Paper 23 is conveyed to cutter 30 by feed rollers 25, 26. *Id*. at 5:33–36. Slices 40 contact a cut piece of paper as slice 40 falls such that slices 40 accumulate onto stack 41 with interleaved pieces of paper between each slice. *Id*. at 5:36–38, Fig. 1.

c. Petitioner's Argument and Evidence

Petitioner provides a detailed accounting of the manner in which specific portions of Recher and Jordan describe all aspects of claim 1. Pet. 23–33 (citing Ex. 1005, Abstract, 1:3–5, 1:11–14, 3:18–34, 4:28–33, 5:9–12, 5:37–39, 7:50–52, Fig. 1; Ex. 1006, 1:5–6, 1:53–57, 2:43–49, 2:65–3:2, 3:31–35, 4:2–5, 4:11–17, 5:30–33, 5:47–6:1, 6:4–9, Fig. 1). Petitioner also relies upon testimony from Dr. Richard Hooper to provide evidence of how an ordinarily skilled artisan would understand the disclosures of Recher and Jordan. *Id*. (citing Ex. 1003 ¶¶ 81–110). Petitioner provides rationale for why an ordinarily skilled artisan would have been motivated to combine teachings of Recher and Jordan to arrive at the invention of claim 1, which it supports with: (1) Dr. Hooper's testimony, (2) specified portions of Recher and Jordan, and (3) other objective evidence. *Id*. at 34–36 (citing Ex. 1003 ¶¶ 111–114; Ex. 1005, 4:26–33, Fig. 1; Ex. 1006, 2:46–50, 2:65–3:2, 3:31–39, 3:65–66, 5:30–34, 5:47–6:1, 6:4–9, 6:14–17, Fig. 1; Ex. 1012 ¶¶ 27–32; Ex. 1017, 1, 12, 14, 26, 31; Ex. 1018, 3, 6, 7, 9–14; Ex. 1022, 6, 14). Based on Dr. Hooper's testimony and objective evidence, Petitioner also argues that an ordinarily skilled artisan would have reasonably expected to successfully combine the selected teachings of Recher and Jordan. *Id*. at 36–37 (citing Ex. 1003 ¶¶ 48, 115–118; Ex. 1005, 4:10–18, 4:26–33, Fig. 1; Ex. 1006, 6:14–17; Ex. 1013, 1:4–13, 3:16–30, Figs. 2, 3; Ex. 1015, 3:21–29, Figs. 1, 2; Ex. 1017, 12; Ex. 1018, 3, 6, 7, 9–14).

d. Patent Owner's Counterarguments

Patent Owner argues that Petitioner fails to prove the unpatentability of claim 1 for four reasons. PO Resp. 22–54. More specifically, Patent

Owner argues that neither Recher nor Jordan disclose three different aspects of element 1.4. *See id*. at 22–32 (no tension control), 36–43 (drivers not driven at select differential speeds), 43–54 (no signal communication between controller and first and second drivers). Patent Owner also argues that an ordinarily skilled artisan would not have been motivated to combine Recher and Jordan as Petitioner contends. We find none of Patent Owner's arguments to be persuasive.

i. Tension Control

Patent Owner contends that Jordan maintains the same tension in its loop 29 as the loop lengthens and shortens by applying vacuum that "holds the loop *taut* without impeding the movement of the web of paper." PO Resp. 28–31 (quoting with emphasis Ex. 1006, 6:2–3 and citing Ex. 2011 ¶¶ 216–32). We disagree. Petitioner responds persuasively that both experts agree that Jordan's use of vacuum to keep loop 29 "taut" does not refer to a specific value and that the degree of "tautness" can vary. Reply 10 (citing Ex. 1031 ¶¶ 53–54; Ex. 1032, 22:18–23, 23:12–14). Similarly, the '531 patent describes applying positive pressure to the loop from above, Ex. 1001, 10:64–11:6, 14:42–44, rather than Jordan's method of applying negative pressure applied from below, Ex. 1006, 6:2–3.

Petitioner also responds that Jordan's vacuum is applied "without impeding movement of the paper" and thus results in "only a slight tension." *Id*. at 11 (citing Ex. 1006, 6:2–3; Ex. 2011 ¶ 294). Similarly, the '531 patent describes its positive pressure applied to the loop as causing "slight tension in the slackened web material 312." Ex. 1001, 11:2–3. Dr. Howard, Patent Owner's expert, agrees that only Jordan need only apply a small vacuum-generated force to keep its loop 29 steady in shaft 27. Ex. 1032, 92:15–93:8.

The record establishes that air pressure used by Jordan and the ’531 patent is used to stabilize each system’s loop, but does not constitute the dominant force for generating tension in each loop.

Petitioner correctly points out that Jordan indisputably controls the amount of accumulated paper in its shaft 27 by varying the differential speed between its rollers 24 and its rollers 25, 26. Ex. 1006, 5:47–49, 6:6–9. Additionally, both experts agree that Jordan keeps the amount of accumulated paper in shaft 24 within limits set by the position of Jordan’s sensors 34 at the top and bottom of shaft 27. Ex. 1031 ¶ 50; Ex. 1032, 93:9–22. Both experts agree that the accumulated paper is taken up such that the paper is pulled into a straight line between Jordan’s rollers 24 and 25, 26 higher tension in the paper results. Ex. 1031 ¶ 50; Ex. 1032, 94:6–17. When Jordan senses this higher tension condition, it speeds up rollers 24 (as compared to rollers 25, 26) “until the loop is sufficiently big again.” Ex. 1006, 6:7–9. If too much paper accumulates in Jordan’s shaft 27 (indicating lower tension), then Jordan adjusts the differential speed between rollers 24 and 25 by stopping roller 24. *Id*. at 6:6–7. Based on our review of the entire record, we determine that Petitioner has demonstrated by a preponderance of evidence that Jordan senses and controls tension using sensors 34 in its shaft 27 and a computer to control its roller 24.

ii. Select Differential Speeds

Patent Owner argues that Jordan fails to disclose a “controller . . . to drive web material at select differential speeds by said first and second drivers” as recited in element 1.4. Patent Owner’s argument is premised upon its interpretation of “select differential speeds,” requiring that the controller select specific different speeds for the first and second drive

rollers. PO Resp. 36–41. As explained in Part II.A.2 above, we have interpreted "select differential speeds" to refer to at least two different relative speeds between the first and second drivers.

Petitioner persuades us that Jordan discloses two different relative speeds between its take-up rollers 24 and feed rollers 25, 26. If Jordan's loop 29 "becomes to[o] small," Jordan increases the speed of take-up rollers 24 "until the loop is sufficiently big again." Ex. 1006, 6:7–9. If Jordan's loop 29 is "too large the take-up rollers 24 are stopped." Thus, Jordan's take-up rollers are driven at two different speeds when compared to the speed of its feed rollers 25, 26, and these two different comparative speeds constitute two different relative (or differential) speeds. Accordingly, we determine that Petitioner has demonstrated by a preponderance of evidence that Jordan discloses driving "web material at select differential speeds by said first and second drivers" as recited in element 1.4.

iii. Controller in "Signal-Communication" with the First and Second Drivers

Patent Owner contends that Jordan's computer does not control its buffer loop 29 and thus Jordan fails to disclose a "controller in signal-communication with said first and second drivers" as recited in element 1.4.[12] PO Resp. 44 (citing Ex. 1006, 2:65–3:2). Petitioner relies upon the same portion of Jordan to support its contention that Jordan's computer controls take-up rollers 24 and feed rollers 25 and 26. The passage at issue reads: "The separate movements of the air-permeable conveying device, the

[12] We note that independent claims 9, 14, and 15 encompass a slightly broader version of the controller by reciting "a controller in signal-communication with at least one of said first and second drivers." Ex. 1001, 13:11–12 (claim 9), 14:14–15 (claim 14), 14:32–33 (claim 15).

paper infeed and the stacking surface are controlled by the conveyor scales and a scanning device arranged in the conveying direction before the air-permeable conveying device, in conjunction with an electronic computer."[13] Ex. 1006, 2:65–3:2. Patent Owner argues that the "paper infeed" does not include take-up rollers 24 or photocells 34 and that Jordan's computer only synchronizes delivery of food slices to the stacking surface with slices of paper fed by rollers 25 and 26. PO Resp. 44–46 (citing Ex. 2011 ¶¶ 363–380). Patent Owner relies upon Dr. Howard's analysis of the cited passage above. *Id*. Dr. Howard testifies that an ordinarily skilled artisan would understand that Jordan's computer communicates with:

a. The air-permeable conveying device 6;

b. The paper infeed (rollers 25, 26);

c. The stacking surface 16;

d. The conveyor scales 1; and

e. The scanning device 33.

Ex. 2011 ¶ 370. Dr. Howard highlights in orange these computer-controlled elements in the annotated version of Jordan's Figure 1 (reproduced below).

[13] Jordan later refers to its "paper feed arrangement," which includes take-up rollers 24, magazine roll 23, feed rollers 25 and 26, shaft 27, and photocells 34. Ex. 1006, 5:29–6:5.

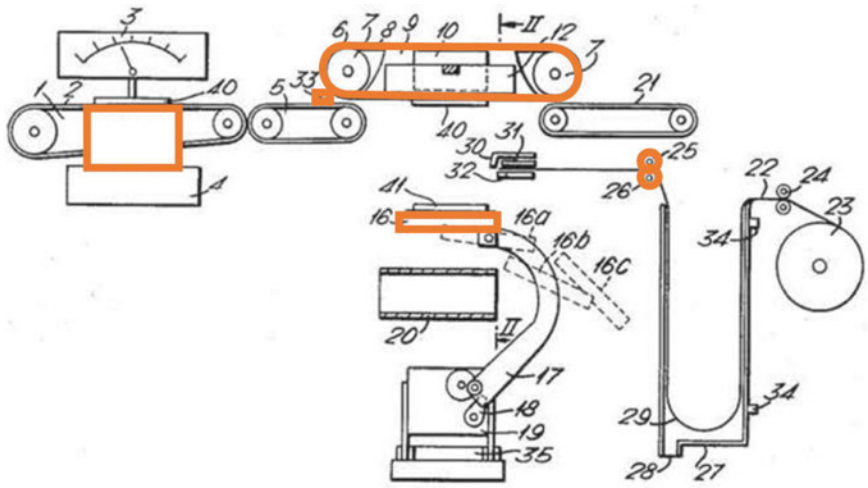

(Ex. 1006, Fig. 1, Provisur annotations)

> Dr. Howard highlights in orange Jordan's computer controlled components in the annotated version of Jordan's Figure 1. *Id*.

Dr. Howard also testifies that when Jordan states that "paper is fed in by [the] feed rollers 25 and 26 at about the time the air-permeable conveying device 6 grips a slice of the right weight," Ex. 1006, 5:33–34, Jordan is describing its "infeed" subsystem, which does not include take-up rollers 24 and photocells 34, of the "paper feed arrangement," *id*. at 5:30. Ex. 2011 ¶¶ 371–372. Dr. Howard opines that Jordan's computer controls only the timing of feed rollers 25 and 26 with conveying device 6 and photocell 33, which feeds slices 40 of food to stack 41, and does not control take-up rollers 24 or photocells 34. *See id*. ¶¶ 371–375.

Dr. Howard relies on two passages from Jordan. First, he quotes the following statement:

> The slices 40 fall from a cutting apparatus (not illustrated) preferably first on to a weighing conveyor comprising a conveyor belt 2, an indicating instrument 3 and a weighing device 4 and coupled with an electronic computer. After this a conveyor belt 5 can take over conveyance of the slices 40. A scanning device 33, preferably a photocell, detects the approach

> of the slice 40 and in conjunction with the electronic computer sets the air-permeable conveying device 6 in motion.

Ex. 2011 ¶ 373 (emphasis omitted) (quoting Ex. 1006, 3:64–4:5). Second, Dr. Howard quotes the following statement:

> The conveying device 6 does not start again until a new slice is announced by the scanning device 33.

Id. (emphasis omitted) (quoting Ex. 1006, 4:21–23).

Dr. Howard also testifies that Jordan expressly discloses that its take-up rollers 24 are entirely controlled by photocells 34, not Jordan's computer. Ex. 2011 ¶¶ 376–380. He opines that because "machine controllers were relatively rare" when Jordan was written in 1971, Jordan's photocells 34 "were electrical devices in a circuit," and he provides a diagram of such a circuit that would have been "likely." *Id*. ¶ 378.

We are more persuaded by Petitioner's argument that an ordinarily skilled artisan would understand Jordan to disclose or at least suggest a computer that controls, not only feed rollers 25 and 26, but also take-up rollers 24 and photocells 34. First, Jordan indicates that "sheets of paper to be placed between the slices *are fed in by take-up rollers* which are continuously operated and remove the paper from a magazine roll." Ex. 1006, 3:31–33 (emphasis added). Thus, Jordan also describes its take-up rollers 24 as feeding in paper, which at least suggests that take-up rollers 24 are part of Jordan's computer-controlled "paper infeed."

Second, Petitioner notes that the correct timeframe for an ordinarily skilled artisan to form an understanding of Jordan is the time of the invention (2006), not Jordan's filing date in 1971. Reply 19 (citing *Takeda Chemical Industries, Ltd. v. Alphapharm Pty., Ltd.*, 492 F.3d 1350, 1362–63 (Fed. Cir. 2007)). Both experts agree that programmable logic controllers

were widely used with well-known benefits in the food processing industry as of 2005. Ex. 1031 ¶¶ 94–101; Ex. 1032 120:3–23, Ex. 1026, 27; Ex. 2031, 12–13.

Third, Jordan expressly indicates that its computer uses signals from photocell 33 to control conveying device 6. Ex. 1006, 4:2–5. We consider Jordan's express indication that its computer controls photocell 33 to at least suggest that Jordan's computer also uses signals from photocells 34 to control take-up rollers 24. Further, we find Dr. Howard's testimony that photocells 34 are used in an uncontrolled electrical circuit, Ex. 2011 ¶ 378, is speculative and not supported by objective evidence. *See* 37 C.F.R. § 42.65(a).

Fourth, Patent Owner's reliance on Jordan's statement that the "loop 29 is controlled by, for instance, two photocells 34," Sur-reply 3, is also unpersuasive. Jordan similarly describes its "air permeable conveying device [6]" as being "controlled by . . . a scanning device [33] . . . in conjunction with an electronic computer." Ex. 1006, 2:65–3:2. Thus Jordan uses "control" to refer not only to the computer communicating with a controlled device, but also a sensor providing input to the computer that controls that device. We are persuaded by Dr. Hooper's testimony that an ordinarily skilled artisan would have understood Jordan as disclosing that "photocells 34 provide input to the electronic computer so that the electronic computer can send commands for appropriate control of the movement of the paper infeed." Ex. 1003 ¶ 105; Ex. 1031 ¶ 101; Ex. 1006, 2:65–3:2; Ex. 2031, 5–6.

Based on our review of the entire record, Petitioner establishes by a preponderance of evidence that Jordan discloses or suggests a "controller in

signal-communication with said first and second drivers" as recited in element 1.4.

iv. Motivation to Combine

Patent Owner argues that an ordinarily skilled artisan would not have been motivated to combine Jordan's buffer loop system for feeding paper with Recher's interleaver because Jordan "would be incapable of feeding paper at the high speeds required by modern food slicers and their interleavers." PO Resp. 32–33. Patent Owner contends that Jordan is capable of operating at only "up to 300 slices per minute." *Id*. at 34 (citing Ex. 1006, 2:41–42). Patent Owner points out that Jordan operates at one sixth the speed of slicers identified in the '531 patent. *Id*.

Petitioner persuasively responds that, because claim 1 does not require any particular speed of operation, Patent Owner's focus on Jordan's inability to operate at a particular speed is irrelevant. Reply 21. Petitioner also points out that the speed of 300 slices per minute identified by Jordan refers to its slicing apparatus, not the paper feeding system, which Jordan describes as able to "be combined with known high-speed slicing machines," some of which "operate at 1,400 slices per minute." *Id*. at 22 (citing Ex. 1006, 1:66–2:43, 6:14–17; Ex. 2018, 1:59–69). Additionally, Jordan states that "paper can be fed in at high speed" and that its vacuum in shaft 27 operates "without impeding the movement of the web of paper." Ex. 1006, 3:37–39, 6:2–3.

For all these reasons, we determine that Petitioner has established that an ordinarily skilled artisan would have been motivated to combine Jordan and Recher to arrive at the invention of claim 1. We also find persuasive and adopt as our own Petitioner's argument and evidence that an ordinarily

skilled artisan would have had a reasonable expectation of success in combining teachings from Recher and Jordan. *See* Pet. 36–37.

e. Conclusion

For all the reasons expressed above, we conclude that Petitioner has established by a preponderance of evidence that the combined teachings of Recher and Jordan render claim 1 unpatentable as obvious.

2. Dependent Claims 2, 4, and 8

a. Claim 2

Claim 2 depends from claim 1 and further recites: "wherein said tension is controlled by said controller to allow a slackened length of web material between said drawing station and said feed station that is greater than a straight line distance of the web material spanning between said drawing station and said feed station." Ex. 1001, 12:26–31. Petitioner argues that Jordan's mechanisms for controlling the slack in loop 29 meet the limitations introduced in claim 2. Pet. 37–38 (citing Ex. 1006, 3:35–39, 5:47–61, Fig. 1; Ex. 1003 ¶¶ 119–122). Patent Owner does not argue separately that the combined teachings of Recher and Jordan fail to disclose or suggest all limitations of claim 2. *See generally* PO Resp. (advancing arguments directed to independent claims 1, 9, 14, and 15 and dependent claims 3, 6, and 7). Based on our review of Petitioner's argument and evidence of record, which we adopt as our own (*see In re NuVasive*, 841 F.3d 966, 974 (Fed. Cir. 2016)), we determine that Petitioner has demonstrated by a preponderance of evidence that the combined teachings of Recher and Jordan render dependent claim 2 unpatentable as obvious.

b. Claim 4

Claim 4 depends from claim 1 and further recites: "wherein said supply comprises a roll of web material on a spool." Ex. 1001, 12:37–38. Petitioner argues that Jordan's magazine roll 23 of web 22 and Recher's "supply roll" each meets the limitations introduced in claim 4. Pet. 39 (citing Ex. 1006, 3:31–33, 5:30–33; Ex. 1005, 3:18–28; Ex. 1003 ¶¶ 123–126). Patent Owner does not argue separately that the combined teachings of Recher and Jordan fail to disclose or suggest all limitations of claim 4. *See generally* PO Resp. (advancing arguments directed to independent claims 1, 9, 14, and 15 and dependent claims 3, 6, and 7). Based on our review of Petitioner's argument and evidence of record, which we adopt as our own (*see NuVasive*, 841 F.3d at 974), we determine that Petitioner has demonstrated by a preponderance of evidence that the combined teachings of Recher and Jordan render dependent claim 4 unpatentable as obvious.

c. Claim 8

Claim 8 depends from claim 1 and further recites:

> wherein said tension is controlled by said controller to allow a slackened length of web material between said drawing station and said feed station that is greater than a straight line distance of the web material spanning between said drawing station and said feed station; and
>
> wherein said non-contact sensor senses the slackened length of web material between said drawing station and said feed station and is in signal-communication with said controller to adjust the differential speed of said first and second drivers to maintain said slackened length at a pre-selected amount.

Ex. 1001, 12:56–67. Petitioner argues that its analysis of claim 2 applies equally to claim 8. Pet. 39–40 (cross-referencing argument and evidence

marshalled against claim 2 and citing Ex. 1003 ¶ 129). Petitioner also contends that Jordan's photocells 34 operate in the manner specified in claim 8. Pet. 40–41 (citing Ex. 1006, 4:2–5, 6:4–9; Ex. 1003 ¶¶ 127–132). Patent Owner does not argue separately that the combined teachings of Recher and Jordan fail to disclose or suggest all limitations of claim 8. *See generally* PO Resp. (advancing arguments directed to independent claims 1, 9, 14, and 15 and dependent claims 3, 6, and 7). Based on our review of Petitioner's argument and evidence of record, which we adopt as our own (*see NuVasive,* 841 F.3d at 974), we determine that Petitioner has demonstrated by a preponderance of evidence that the combined teachings of Recher and Jordan render dependent claim 8 unpatentable as obvious.

3. Summary

For all the reasons expressed above, we conclude that Petitioner has established by a preponderance of evidence that the combined teachings of Recher and Jordan render claims 1, 2, 4, and 8 unpatentable as obvious.

F. CLAIMS 3 AND 14:
OBVIOUSNESS IN VIEW OF RECHER, JORDAN, AND BIFORCE

Dependent claim 3 and independent claim 14 each recite a "tensioning station between said supply and said drawing station such that tension of said web material between said drawing station and said supply station is controlled." Ex. 1001, 12:34–36 (claim 3), 14:19–21 (claim 14). The '531 patent illustrates the claimed tensioning station as "tension control station 610," which includes dancer roller 636 to control tension in web 312 between supply 601 and unwind (i.e., drawing) station 616. Ex. 1001, 9:5–61, Figs. 18, 19.

Petitioner relies upon Biforce's dancer roller arrangement 3, 4, 5 between its carrier roller 1 and conveyor barrel pair 10 as constituting the

claimed tensioning station. Pet. 41–43 (citing Ex. 1007, 2:16–24, 2:33–42, Fig. 1; Ex. 1003 ¶¶ 9–10, 133–141). Petitioner provides the annotated version of Biforce's Figure 1 (reproduced below) to explain its argument.

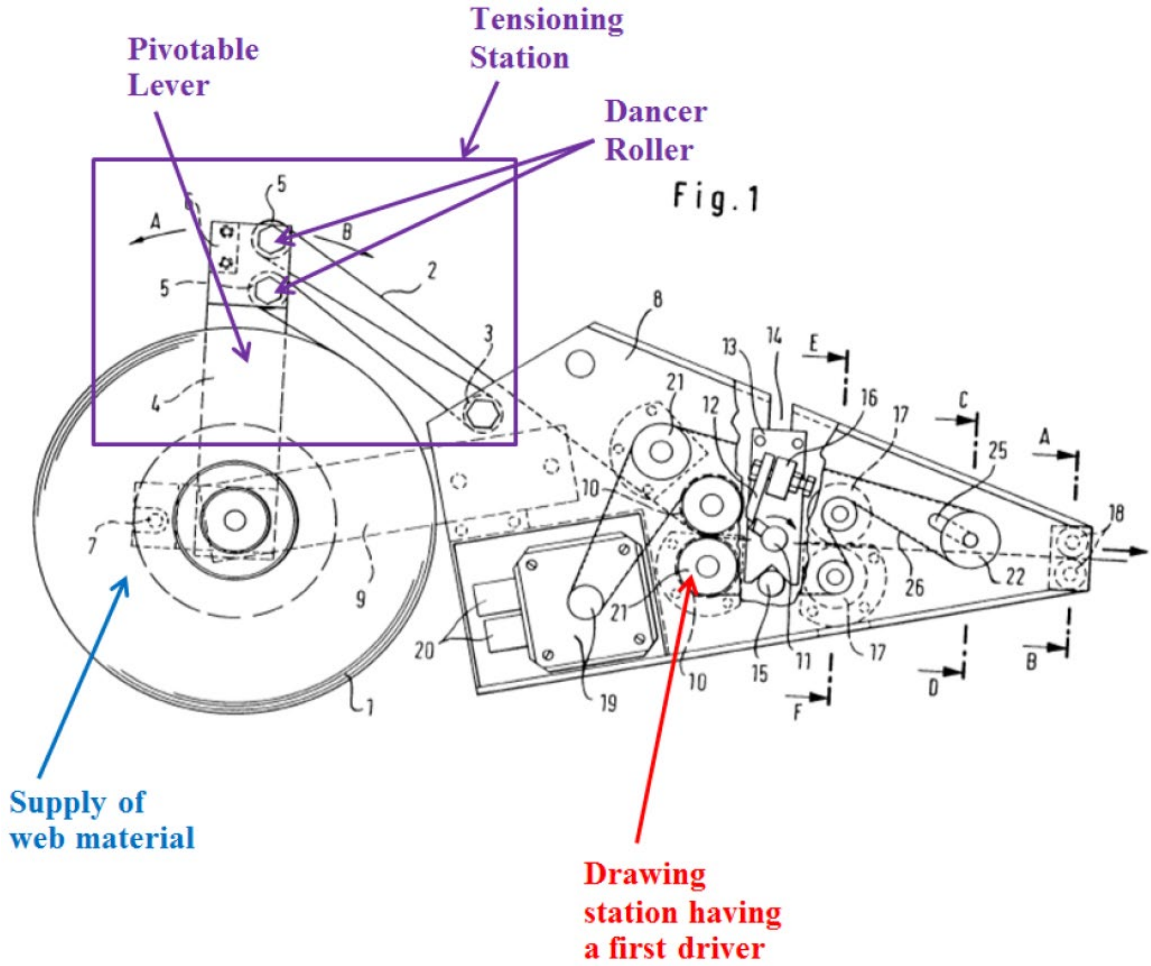

> Petitioner's annotated version of Biforce's Figure 1 illustrates a device for positioning and separating sheets between slices of food.

Ex. 1007, codes (54), (57), 2:5–7.

Patent Owner does not contest that Biforce discloses the tensioning station, but argues that an ordinarily skilled artisan would not have modified Jordan by adding Biforce's tensioning station. PO Resp. 47–51. Patent Owner also argues that an ordinarily skilled artisan would not have had a

reasonable expectation of success in modifying Jordan as Petitioner suggests. *Id*. at 51–54.

We address each of claims 3 and 14 separately below.

1. Dependent Claim 3

Claim 3 depends from claim 2, which depends from claim 1 and adds the tensioning station described above. Ex. 1001, 12:32–36. Petitioner argues that an ordinarily skilled artisan would have been motivated to add Biforce's dancer roller arrangement to Jordan to compensate for the inertia of Jordan's large magazine roll 23 and the start/stop operation of Jordan's take-up rollers 24. Pet. 43–44 (citing Ex. 1003 ¶ 142). Petitioner also contends that an ordinarily skilled artisan would have had a reasonable expectation of successfully integrating Biforce's dancer roller into Jordan's system because few modifications would be needed and doing so would involve no more than using a known technique to improve a similar device in a predictable way. *Id*. at 44 (citing Ex. 1003 ¶ 143).

Patent Owner argues that an ordinarily skilled artisan would not have modified Jordan with Biforce because Jordan already "synchronizes and evens out the length of paper feed with its accumulation loop 29 in the vacuum shaft 27." PO Resp. 49 (citing Ex. 1006, 5:47–6:7; Ex. 2011 ¶¶ 164, 168, 403, 404, 406, 407).

Petitioner persuasively responds that Jordan wholly failed to recognize or solve problems relating to inertia of its magazine roll 23 and has no mechanism for controlling tension in the web between magazine roll 23 and take-up rollers 24. Reply 25–26 (citing Ex. 1006, 6:4–9, Fig. 1). When Jordan's take-up rollers stop because loop 29 is too large, magazine roll 23 would continue to rotate due to its inertia, which would result in

excess web material between magazine roll 23 and take-up rollers 24. Ex. 1031 ¶ 134. Also, when Jordan's take-up rollers 24 increase speed to compensate for loop 29 being too small, then the inertia of magazine roll 23 would resist that increased speed and cause higher tension in the web material between magazine roll 23 and take-up rollers 24. *Id*. ¶ 135. Both experts agree that providing a tensioning station such as Biforce's to account for supply roll inertia would have benefits. Ex. 1031 ¶ 136; Ex. 1032, 138:18–139:12. Petitioner persuades us that an ordinarily skilled artisan would have been motivated to modify Jordan to add Biforce's dancer roller arrangement to mitigate the inertial effects of Jordan's magazine roll 23.

Patent Owner also argues that Petitioner fails to establish that an ordinarily skilled artisan would have a reasonable expectation of succeeding in incorporating Biforce's dancer roller arrangement into Jordan. PO Resp. 51–54. More specifically, Patent Owner argues that Petitioner fails to explain how an ordinarily skilled artisan would make room for Biforce's arrangement in the space in Jordan's Figure 1 between Jordan's magazine roll 23 and take-up rollers 24. *Id*. at 52.

Petitioner persuasively responds that it need not prove how Biforce can be bodily incorporated into Jordan to prove that an ordinarily skilled artisan would reasonably expect success in modifying Jordan to include Biforce's dancer roller arrangement. Reply 28 (citing *In re Mouttet*, 686 F.3d 1322, 1332 (Fed. Cir. 2012); *In re Keller*, 642 F.2d 413, 425 (CCPA 1981)). Petitioner persuades us by a preponderance of evidence that an ordinarily skilled artisan would have been able to incorporate a dancer roller arrangement such as Biforce's into Jordan's system between its magazine

roll 23 and take-up rollers 24. Pet. 43–44 (citing Ex. 1003 ¶ 143), Reply 28 (citing Ex. 1031 ¶¶ 138–141).

For the reasons expressed above, Petitioner establishes that the combined teachings of Recher, Jordan, and Biforce render claim 3 unpatentable as obvious.

2. Independent Claim 14

Independent claim 14 recites materially the same limitations as claim 1 while adding the limitation introduce in claim 3 as well. *Compare* Ex. 1001, 14:4–21 (claim 14), *with id*. at 12:5–25, 32–36 (claims 1 and 3). Patent Owner submits the same argument for claims 3 and 14. PO Resp. 47–54. For the reasons expressed in Parts II.E.1 and II.F.1 above, we conclude that Petitioner has established by a preponderance of evidence that the combined teachings of Recher, Jordan, and Biforce render claim 14 unpatentable as obvious.

G. CLAIMS 6 AND 7:
OBVIOUSNESS IN VIEW OF RECHER, JORDAN, BIFORCE, AND GASKINS

1. Claim 6

Claim 6 depends from claim 1 and further comprises:

> a tensioning station between said supply and said drawing station such that tension of said web material between said drawing station and said supply is controlled, wherein said tensioning station comprises a dancer roller mounted on a pivotable lever and a urging device that exerts a controllable force on said lever.

Ex. 1001, 12:43–50.

Petitioner relies upon Biforce's dancer roller arrangement as constituting the "tensioning station" and Gaskins's dancer roll tension-loading actuator 46 as constituting the "urging device" introduced in

claim 6. Pet. 46–48 (citing Ex. 1007, 2:19–24, Fig. 1; Ex. 1008, 2:53–3:10, 4:27–29, Fig. 1; Ex. 1003 ¶¶ 11–12, 155–157). Petitioner also argues that an ordinarily skilled artisan would have been motivated to include Biforce's dancer roller arrangement and Gaskins's actuator into Jordan's device and would have had a reasonable expectation of succeeding in doing so. *Id.* at 48–49 (citing Ex. 1003 ¶¶ 158–159).

Patent Owner argues that claim 6 remains patentable for the same reasons identified in connection with claim 3. PO Resp. 47–54 (arguing for patentability of claims 3, 14, 6, and 7 together). For the reasons expressed in Part II.F.1 above and the argument and evidence adduced by Petitioner, which we adopt as our own, Petitioner persuades us that the combined teachings of Recher, Jordan, Biforce, and Gaskins render claim 6 unpatentable as obvious

2. Claim 7

Claim 7 depends from claim 6 and further recites "wherein said urging device comprises a pneumatic cylinder actuator having a body and an extendable cylinder rod, one of said body and said rod fixed in position and the respective other of said body and said rod connected to said lever." *Id.* at 12:51–55. Petitioner relies upon Gaskins's actuator 46 as constituting the "pneumatic cylinder actuator" introduced in claim 7. Pet. 50 (emphasis omitted) (citing Ex. 1008, 2:57–3:10; Ex. 1003 ¶¶ 161–163). Petitioner also contends that an ordinarily skilled artisan would have combined Gaskins's actuator with Biforce's dancer roller and Jordan's system and reasonably expected success in doing so for the same reasons identified in relation to claim 6. *Id.* (citing Ex. 1003 ¶ 164).

Patent Owner argues that claim 7 remains patentable for the same reasons identified in connection with claim 3. PO Resp. 47–54 (arguing for patentability of claims 3, 14, 6, and 7 together). For the reasons expressed in Part II.F.1 above and the argument and evidence adduced by Petitioner, which we adopt as our own, Petitioner persuades us that the combined teachings of Recher, Jordan, Biforce, and Gaskins render claim 7 unpatentable as obvious

H. CLAIM 5: OBVIOUSNESS IN VIEW OF RECHER, JORDAN, AND ALEXANDER

Claim 5 depends from claim 4, which depends from claim 1, and further recites: "wherein said supply comprises a non-contact sensor that sends a signal to said controller corresponding to the amount of web material on said spool." Ex. 1001, 12:39–42. Petitioner relies upon Alexander's ultrasonic transducer D, which senses the amount of paper left on its supply roll, as the sensor introduced in claim 5. Pet. 51–53 (citing Ex. 1009, 1:6–16, 1:38–44, 2:15–19, 2:66–3:3, 3:11–16, Figs. 1, 3; Ex. 1003 ¶¶ 13–14, 165–174). Petitioner also argues that an ordinarily skilled artisan would have been motivated to modify Jordan to add Alexander's transducer to sense the state of Jordan's magazine roll 23 and communicate that state to Jordan's computer and would have reasonably expected success in doing so. *Id*. at 53–54 (citing Ex. 1003 ¶¶ 174–178; Ex. 1018, 3, 6, 7, 9–14).

Patent Owner does not argue separately that the combined teachings of Recher, Jordan, and Alexander fail to disclose or suggest all limitations of claim 5. *See generally* PO Resp. (advancing arguments directed to independent claims 1, 9, 14, and 15 and dependent claims 3, 6, and 7). Based on our review of Petitioner's argument and evidence of record, which we adopt as our own (*see NuVasive,* 841 F.3d at 974), we determine that

Petitioner has demonstrated by a preponderance of evidence that the combined teachings of Recher, Jordan, and Alexander render dependent claim 5 unpatentable as obvious.

I. CLAIMS 9 AND 10: OBVIOUSNESS IN VIEW OF RECHER, JORDAN, AND CALLAN

Independent claim 9

1. Independent Claim 9

Independent claim 9 recites materially the same limitations as elements 1.1–1.4 of claim 1, but does not recite element 1.5, the "non-contact sensor" of claim 1. *Compare* Ex. 1001, 13:1–22 (claim 9), *with id.* at 12:5–25 (claim 1). Petitioner cross-references its argument and evidence relating to claim 1 for the common elements with claim 9. Pet. 55 (cross referencing argument for elements 1.1–1.4).

However, claim 9 recites limitations not found in claim 1, including:

> wherein said second driver comprises opposing rollers wherein at least one of said rollers is motor driven and said rollers are pressed together with a resilient interface and roll in opposite directions to form a pinch nip for receiving and driving said web material; and
>
> wherein said resilient interface is discontinuous along a lateral direction of said pinch nip.

Ex. 1001, 13:16–22. Petitioner argues that Jordan's feed rollers 25 and 26 are "driven and . . . pressed together . . . and roll in opposite directions to form a pinch nip for receiving and driving said web material" as recited above. Pet. 55–56 (citing Ex. 1006, 2:64–3:2, 3:33–35, 3:53–57, 5:30–34, 5:43–47, 6:14–18, Fig. 1; Ex. 1003 ¶¶ 187–189). Petitioner argues that Callan's opposing anti-wrap rollers 60A and 60B with resilient "engaging rings 65A, 65B" as constituting the "resilient interface" on the "opposing

rollers" that is "discontinuous along a lateral direction" of claim 9. Pet. 58–60 (emphasis omitted) (citing Ex. 1010, 4:20–23, 9:31–33, 9:35–36, 9:56–57, 9:59–10:4, Fig. 6). Petitioner argues that an ordinarily skilled artisan would have been motivated to modify Jordan's feed rollers 25 and 26 to incorporate the resilient interface of Callan's rollers 60A and 60B to improve the gripping action of Jordan's rollers, among other reasons. *Id.* at 60 (citing Ex. 1003 ¶¶ 194–195; Ex. 1006, 3:46–50, 5:38–43; Ex. 1010, 9:31–33, 9:62–10:4, Fig. 6).

Patent Owner submits the same argument for claims 9 and 1 without addressing Petitioner's reliance on Callan as suggesting modifications to the Recher/Jordan combination relating to the aspects of claim 9 that differ from claim 1. PO Resp. 22–54. For the reasons expressed in Part II.E.1 above and Petitioner's argument and evidence of record described above, which we adopt as our own (*see NuVasive,* 841 F.3d at 974), we determine that Petitioner has demonstrated by a preponderance of evidence that the combined teachings of Recher, Jordan, and Callan render claim 9 unpatentable as obvious.

2. Dependent Claim 10

Claim 10 depends from claim 9 and further recites:

> wherein one of said opposing rollers comprises annular recesses spaced apart along said lateral direction and a respective other of said opposing rollers has annular rings that are arranged to fit within said annular recesses, wherein the interaction of said annular recesses and annular rings causes said web material driven by said pinch nip to assume a corrugated profile downstream of said pinch nip.

Ex. 1001, 13:23–30. Petitioner relies upon Jordan's feed rollers 25 and 26, which have complementary projections (on 25) and recesses (on 26), as

constituting the annular rings and recesses introduced in claim 10. Pet. 62 (citing Ex. 1006, 5:38–43; Ex. 1003 ¶¶ 198–200). Jordan's feed rollers 25 and 26 "produce corrugations in the paper." Ex. 1006, 5:38–41. Petitioner also relies on Callan's rings 65A that are staggered with rings 65B, which also produce a corrugated profile in the paper, as constituting the annular rings and recesses introduced in claim 10. Pet. 62 (citing Ex. 1010, 9:62–63, Fig. 6; Ex. 1003 ¶¶ 198–200).

Patent Owner does not argue separately that the combined teachings of Recher, Jordan, and Callan fail to disclose or suggest all limitations of claim 10. *See generally* PO Resp. (advancing arguments directed to independent claims 1, 9, 14, and 15 and dependent claims 3, 6, and 7). Rather, Patent Owner relies on its argument relating to claim 9, which we have already found unpersuasive. Based on our review of Petitioner's argument and evidence of record, which we adopt as our own (*see NuVasive,* 841 F.3d at 974), we determine that Petitioner has demonstrated by a preponderance of evidence that the combined teachings of Recher, Jordan, and Callan render dependent claim 10 unpatentable as obvious.

J. CLAIMS 11–13: OBVIOUSNESS IN VIEW OF RECHER, JORDAN, CALLAN, AND SYKES

Claims 11–13 depend directly or indirectly from claim 9. Ex. 1001, 13:31–14:3. The claims add limitations relating to the shape of the surface of one of the rollers (claim 11) or add elements such as a "comb plate" (claim 12) and a "bottom deflecting surface" (claim 13). Petitioner relies upon Sykes as disclosing the various limitations or elements introduced in claims 11–13. Pet. 63–72 (citing Ex. 1011, 1:18–21, 1:33–37, 2:40–47, 4:55–58, Fig. 8; Ex. 1003 ¶¶ 17–18, 202–211, 215–223). Petitioner also relies upon Callan as disclosing the limitations introduced in claim 12. *Id.*

at 67–68 (citing Ex. 1010, 11:34–40, 11:47–51, Fig. 3B; Ex. 1003 ¶¶ 215–218). Petitioner also argues that an ordinarily skilled artisan would have been motivated to incorporate the identified features from Sykes and Callan into Jordan's interleaving system and would have had a reasonable expectation of succeeding at doing so. *Id*. at 63–72 (citing Ex. 1003 ¶¶ 212–214, 224–226).

Patent Owner does not argue separately that the combined teachings of Recher, Jordan, Callan, and Sykes fail to disclose or suggest all limitations of claims 11–13. *See generally* PO Resp. (advancing arguments directed to independent claims 1, 9, 14, and 15 and dependent claims 3, 6, and 7). Rather, Patent Owner relies on its argument relating to claim 9, which we have already found unpersuasive. Based on our review of Petitioner's argument and evidence of record, which we adopt as our own (*see NuVasive,* 841 F.3d at 974), we determine that Petitioner has demonstrated by a preponderance of evidence that the combined teachings of Recher, Jordan, Callan, and Sykes render dependent claims 11–13 unpatentable as obvious.

K. Claim 15: Obviousness in View of Recher, Jordan, and Brueckel

Independent claim 15 recites materially the same limitations as elements 1.1–1.4 of claim 1, but does not recite element 1.5, the "non-contact sensor" of claim 1. *Compare* Ex. 1001, 14:22–44 (claim 15), *with id*. at 12:5–25 (claim 1). Petitioner cross-references its argument and evidence relating to claim 1 for the common elements with claim 15. Pet. 73 (cross referencing argument for elements 1.1–1.4).

Claim 15 also recites materially the same limitations introduced in claim 2. Compare Ex. 1001, 14:37–41 (fifth paragraph of claim 15), *with id*.

at 12:26–31 (claim 2). Petitioner cross-references its argument and evidence relating to claim 2 for the common limitations with claim 15. Pet. 73 (cross referencing argument for claim 2).

Claim 15 also recites a limitation not found in claim 1, as follows: "a pressurized air dispenser that is configured to direct an air stream onto a side of said slackened length to maintain a tension on said slackened length of web material." Ex. 1001, 14:42–44. Petitioner argues that Brueckel discloses this "pressurized air dispenser" of claim 15 in the form of its fan 134, which directs air through openings 312 to blow air onto a loop of paper between two pairs of rollers to dampen the movement of the paper in the loop. Pet. 74–75 (citing Ex. 1012 ¶¶ 43, 55, Fig. 1; Ex. 1003 ¶ 236). Petitioner also contends that an ordinarily skilled artisan would have been motivated to combine Brueckel's pressurized air dispenser with the interleaver of Jordan and would have had a reasonable expectation of successfully doing so. *Id*. at 75–76 (citing Ex. 1012 ¶¶ 43, 55; Ex. 1006, 3:37–39, 6:1–4; Ex. 1003 ¶¶ 237–238).

Patent Owner submits the same argument for claims 15 and 1 without addressing Petitioner's reliance on Brueckel as suggesting modifications to the Recher/Jordan combination relating to the aspects of claim 15 that differ from claim 1. PO Resp. 22–54. For the reasons expressed in Part II.E.1 above and Petitioner's argument and evidence of record described above, which we adopt as our own (*see NuVasive,* 841 F.3d at 974), we determine that Petitioner has demonstrated by a preponderance of evidence that the combined teachings of Recher, Jordan, and Brueckel render claim 15 unpatentable as obvious.

III. CONSTITUTIONAL CHALLENGE

Patent Owner also challenges the institution of *inter partes* review on the basis that the current structure of the Board is unconstitutional because the appointment of administrative patent judges allegedly violates the Appointments Clause, U.S. Const. Art. II, § 2, cl. § 2. PO Resp. 23. We are bound by the Federal Circuit's decision in *Arthrex, Inc. v. Smith & Nephew, Inc.*, 941 F.3d 1320 (Fed. Cir. 2019) (Moore, J., concurring in denial of rehearing) ("Because the APJs were constitutionally appointed as of the implementation of the severance, *inter partes* review decisions going forward were no longer rendered by unconstitutional panels.").

Accordingly, we do not consider this issue any further.

IV. CONCLUSION[14]

In summary,

Claim(s)	35 U.S.C. §	Reference(s)	Claim(s) Shown Unpatentable	Claim(s) Not Shown Unpatentable
1, 2, 4, 8	103	Recher, Jordan	1, 2, 4, 8	
3, 14	103	Recher, Jordan, Biforce	3, 14	

[14] Should Patent Owner wish to pursue amendment of the challenged claims in a reissue or reexamination proceeding subsequent to the issuance of this decision, we draw Patent Owner's attention to the April 2019 *Notice Regarding Options for Amendments by Patent Owner Through Reissue or Reexamination During a Pending AIA Trial Proceeding*. *See* 84 Fed. Reg. 16,654 (Apr. 22, 2019). If Patent Owner chooses to file a reissue application or a request for reexamination of the challenged patent, we remind Patent Owner of its continuing obligation to notify the Board of any such related matters in updated mandatory notices. *See* 37 C.F.R. §§ 42.8(a)(3), (b)(2).

Claim(s)	35 U.S.C. §	Reference(s)	Claim(s) Shown Unpatentable	Claim(s) Not Shown Unpatentable
6, 7	103	Recher, Jordan, Biforce, Gaskins	6, 7	
5	103	Recher, Jordan, Alexander	5	
9, 10	103	Recher, Jordan, Callan	9, 10	
11–13	103	Recher, Jordan, Callan, Sykes	11–13	
15	103	Recher, Jordan, Brueckel	15	
		Overall Outcome	1–15	

V. ORDER

For the reasons given, it is:

ORDERED, based on a preponderance of evidence, that claims 1–15 of U.S. Patent 9,399,531 B2 are *unpatentable* as obvious under 35 U.S.C. § 103 as set forth above; and

FURTHER ORDERED because this is a final written decision, the parties to this proceeding seeking judicial review of our Decision must comply with the notice and service requirements of 37 C.F.R. § 90.2.

PETITIONER:

Ralph W. Powers III
Donald R. Banowit
Daniel E. Yonan
Kyle Conklin
Stephen Merrill
STERNE, KESSLER, GOLDSTEIN & FOX P.L.L.C.
tpowers-ptab@sternekessler.com
dbanowit-ptab@sternekessler.com
dyonan-ptab@sternekessler.com
kconklin-ptab@sternekessler.com
smerrill-ptab@sternekessler.com

PATENT OWNER:

Michael G. Babbitt
Sara T. Horton
Ren-How H. Harn
WILLKIE FARR & GALLAGHER LLP
mbabbitt@willkie.com
shorton@willkie.com
rharn@willkie.com