UNITED STATES PATENT AND TRADEMARK OFFICE

BEFORE THE PATENT TRIAL AND APPEAL BOARD

SEMICONDUCTOR COMPONENTS INDUSTRIES, INC.,
Petitioner,

v.

GREENTHREAD, LLC,
Patent Owner.

Case IPR2024-00265
U.S. Patent 9,190,502

DECLARATION OF ALEXANDER D. GLEW

TABLE OF CONTENTS

I. INTRODUCTION 1

II. BACKGROUND AND QUALIFICATIONS 3

III. SCOPE OF ASSIGNMENT AND MATERIALS CONSIDERED 6

IV. LEVEL OF ORDINARY SKILL IN THE ART 9

V. RELEVANT LEGAL PRINCIPLES 10

A. Claim Construction 10

B. Anticipation 12

C. Obviousness 12

VI. THE CHALLENGED PATENTS 14

A. Background Technology Regarding Dopants 14

B. Overview of Challenged Patents 14

VII. OVERVIEW OF ALLEGED PRIOR ART 19

A. Kawagoe 20

B. Wieczorek 22

C. Payne 26

VIII. CLAIM CONSTRUCTION 28

IX. THE CITED REFERENCES DO NOT DISCLOSE OR SUGGEST ALL THE FEATURES OF THE CHALLENGED CLAIM 29

A. Dr. Blalock's Kawagoe-based analysis is incorrect regarding the "aid carrier movement" limitations. 29

B. Dr. Blalock's Wieczorek-based analysis is incorrect regarding the "aid carrier movement" limitations. 35

C. Dr. Blalock's Payne-based analysis is incorrect regarding the "aid carrier movement…" limitations in IPR2024-00265 and -00266. 37

X. CONCLUSION 72

I, Alexander D. Glew, declare as follows:

I. INTRODUCTION

1. My name is Alexander D. Glew. I have been retained on behalf of Greenthread, LLC ("Greenthread"), and its counsel, McKool Smith, P.C., as an expert with regard to this matter. I understand Semiconductor Components Industries, LLC, d/b/a onsemi ("onsemi" or "Petitioner") filed Petitions (Paper No. 1) for inter partes review (IPR) of:

- U.S. Patent No. 11,316,014 ("the '014 patent");
- U.S. Patent No. 10,734,481 ("the '481 patent");
- U.S. Patent No. 9,190,502 ("the '502 patent"); and
- U.S. Patent No. 8,421,195 ("the '195 patent") (collectively, the "Challenged Patents").

2. I have been asked to consider, and provide my independent analysis and opinions regarding: whether the alleged prior art references cited the following proceedings:

- IPR2024-00263 relating to Claims 1-2, 4-9, 13-28 of the '014 Patent;
- IPR2024-00264 relating to Claims 1-9, 13-27, 31-36 of US Patent 10,734,481;
- IPR2024-00265 relating to Claims 7-12 of US Patent 9,190,502; and

- IPR2024-00266 relating to Claims 1-6 of US Patent 8,421,195 (collectively, the "Challenged Claims");

disclose or suggest the features recited in the Challenged Claims. In my view, the alleged prior art references do neither for each of the '014, '481, '502, '195 patents. My opinions and conclusions are fully discussed in later sections of this declaration. This declaration is based on the information currently available to me.

3. I am an independent consultant, and I am not, and have never been, an employee of Greenthread or Petitioner. I am being compensated at my consulting rate of $700 per hour for my work related to this matter. I received no compensation for this declaration beyond my normal hourly compensation based on my time actually spent analyzing the Challenged Patents, the prosecution history of the Challenged Patents and related applications, the alleged prior art publications relied upon by Petitioner, the declarations of Petitioner's expert Dr. Travis Blalock, and other related materials (discussed below in Section III). My compensation is not dependent on the outcome of this IPR or the testimony or opinions that I give.

4. I understand a copy of my curriculum vitae is submitted as EX2067, and it sets forth my educational experience, employment history, and publications.

II. BACKGROUND AND QUALIFICATIONS

5. I earned a B.S. degree in Mechanical Engineering in 1985 and a M.S. degree in Mechanical Engineering in 1987 from the University of California, Berkeley.

6. I earned a M.S. degree in Materials Science and Engineering in 1995 and a Ph.D. in Materials Science and Engineering in 2003 from Stanford University.

7. I am the Founder and President of Glew Engineering Consulting, Inc., based in Mountain View, California. I have been President of Glew Engineering Consulting, Inc. since I started the company in 1997. In my role as President, I have provided consulting services to clients in the field of semiconductor manufacturing and materials, as well as to clients in other fields. I have reviewed and analyzed semiconductor technologies and products. My consulting work has involved semiconductor process equipment, thin film deposition and characterization, process development, project turnaround/rescue, gas flow and vacuum metrology, design of experiments, corrosive gas applications, finite element analysis, and related market analysis.

8. I have over 30 years of experience in semiconductor manufacturing and materials, including in semiconductor equipment and processing. I have implemented numerous manufacturing processes for the formation of semiconductors, including chemical vapor deposition ("CVD"), plasma enhanced

chemical vapor deposition ("PECVD"), high density plasma chemical vapor deposition ("HDPCVD"), etch processing (including dry plasma and wet processing), reactive-ion etching ("RIE"), chemical-mechanical planarization ("CMP"), spin-on dielectrics ("SOD"), epitaxy ("EPI"), molecular beam epitaxy ("MBE"), rapid thermal processing ("RTP"), and others.

9. In 1987, before receiving my Ph.D., I worked at Applied Materials, Inc. in Santa Clara, California. At Applied Materials, Inc., I served in a number of roles, including Engineering Manager, Core-Technologist Project Manager, CVD Supplier Quality Engineering Manager, Core Technologist, CVD Engineering Manager, and Systems Engineer. In these roles, I provided engineering services and supervised other employees on projects related to technologies used to manufacture semiconductors, including CVD, epitaxy, physical vapor deposition ("PVD"), rapid thermal processing ("RTP"), etch, and thermal. I oversaw gas, vacuum, and chemical component evaluation, testing, and supplier quality management. I successfully proposed and executed a project to develop industry methods to determine the effects of trace chemicals on semiconductor processing and equipment reliability. I worked on the development and release of the Precision 5000 CVD product, the first cluster tool for semiconductor manufacturing.

10. I have used alpha particles to perform hydrogen forward scattering (HFS) and Rutherford Back Scattering (RBS) in materials analysis of thin films on

silicon wafers. I am generally familiar with the effects of alpha particles fired at silicon wafers.

11. I am a licensed professional mechanical engineer in the state of California.

12. I have published articles and presented on topics related to semiconductor manufacturing. My curriculum vitae includes a list of selected publications.

13. I am a co-inventor of five U.S. patents: (a) U.S. Patent No. 6,204,174, directed to a method and apparatus to control the deposition rate of material in a semiconductor fabrication process; (b) U.S. Patent No. 9,224,626 and 10,395,593, directed to a method of forming a heater assembly for use in semiconductor processing; and (c) U.S. Patent Nos. 6,679,476 and 7,118,090, both directed to control valves for use in ultra pure applications such as semiconductor processing. I have another patent application pending.

14. I am a member of the American Society of Mechanical Engineers ("ASME"), International Microelectronics and Packaging Society ("IMAPS"), Materials Research Society ("MRS"), Institute of Electrical and Electronics Engineers ("IEEE"), and Semiconductor Equipment and Materials International ("SEMI").

15. I am qualified to render an opinion regarding the design and development of semiconductor manufacturing devices and semiconductor materials based on my experience. Based on my expertise and qualifications, I am qualified to provide an opinion as to what a person of ordinary skill in the art would have understood, known, or concluded as of 2004.

III. SCOPE OF ASSIGNMENT AND MATERIALS CONSIDERED

16. The opinions contained in this declaration are based on the documents that I reviewed, my professional judgment, as well as my education, experience, and knowledge regarding technologies related to the Challenged Patent. In preparing this Declaration, I am relying on my own knowledge and expertise as well as the following documents:

- The Challenged Patents;
- The patents that I understand are in the same family as the Challenged Patents, include each of:
    - U.S. Patent No. 8,421,195 to Dr. G.R. Mohan Rao ("the '195 patent") (Ex. 2068)
    - U.S. Patent No. 9,190,502 to Dr. G.R. Mohan Rao ("the '502 patent") (Ex. 2069);
    - U.S. Patent No. 10,510,842 to Dr. G.R. Mohan Rao ("the '842 patent") (Ex. 2070);

  - U.S. Patent No. 10,734,481 to Dr. G.R. Mohan Rao ("the '481 patent") (Ex. 2071);
  - U.S. Patent No. 11,121,222 to Dr. G.R. Mohan Rao ("the '222 patent") (Ex. 2060)
  - U.S. Patent No. 11,316,014 to Dr. G.R. Mohan Rao ("the '014 patent") (Ex. 2072);

- Prosecution histories for the Challenged Patent and the other patents in the same family (listed above), which I understand constitute the exchange of correspondence between the Patent Office and the applicant (Ex. 1002; Exs. 2073-2077);
- Petitioner's IPR petitions in Nos. IPR2024-00263 (regarding the '014 patent), IPR2024-00264 (regarding the '481 patent), and IPR2024-00265 (regarding the '502 patent), and IPR2024-00266 (regarding the '195 patent);
- Petitioner's IPR petitions in Nos. IPR2023-01242 (regarding the '222 patent), IPR2023-01243 (regarding the '842 patent), and IPR2023-01244 (regarding the '222 patent);
- Declaration and transcript of deposition testimony (Ex. 2058) of Dr. Travis Blalock, who I understand is Petitioner's expert in each of the IPRs (declaration in each IPR is Ex. 1003);

- Petitioner's exhibits 1001-1023, 1025-1038 in each IPR; and
- Any other references/documents cited within this Declaration.

IV. LEVEL OF ORDINARY SKILL IN THE ART

17. Based on my review of the Challenged Patents, the types of problems encountered in the art at and prior to the time of the alleged invention, prior solutions to those problems, the pace with which innovations were made during the relevant time period, the sophistication of the technology, and the educational level of active professionals in the field, I believe that a person of ordinary skill in the art (POSITA), at the time of the alleged invention, would have had at least a Bachelor's of Science degree in electrical or computer engineering, materials science, chemical engineering, applied physics, or a related field, with emphasis on semiconductor manufacturing, or an equivalent degree, and at least four years of experience in semiconductor design and manufacturing. Additional education in a relevant field or industry experience may compensate for a deficit in one of the other aspects of the requirements stated above.

18. All of my opinions in this declaration are from the perspective of a POSITA, as I have defined it above and during the relevant time frame (e.g., late 2004, including the period up to September 3, 2004, which I understand is the earliest claimed priority date of the Challenged Patents). During this time frame, I possessed at least the qualifications of a POSITA, as defined above.

V. RELEVANT LEGAL PRINCIPLES

19. For the purposes of this Declaration, I have been informed about certain aspects of the law that are relevant to my analysis and opinions. I have applied these legal principles in rendering my opinions below.

A. Claim Construction

20. I understand that the ordinary and customary meaning of a claim term is the meaning that the term would have to a POSITA at the time of the effective filing date of the patent application that matured into the patent-at-issue. For the Challenged Patents, this is September 3, 2004. In the absence of an express intent on the part of the inventor to give a special meaning to the claim terms, the words are presumed to take on the ordinary and customary meanings attributed to them by a POSITA.

21. I understand that it is the use of the words in the context of the written description, and as customarily used by those skilled in the relevant art, that accurately reflects both the ordinary and the customary meaning of the terms in the claims.

22. I understand that the basis for a term's ordinary and customary meaning may be derived from a variety of sources, including the words of the claims themselves, the remainder of the specification, the prosecution history, and extrinsic

evidence concerning relevant scientific principles, the meaning of technical terms, and the state of the art at the time of the invention.

23. I have been instructed that dictionary definitions or definitions from technical references can be used to inform or confirm the ordinary and customary meaning of words found in a claim, but that in construing claim terms, the general meanings gleaned from reference sources, such as dictionaries, must always be compared against the use of the terms in the context of the claim itself, and the intrinsic record must always be consulted to identify which of the different possible dictionary meanings is most consistent with the use of the words by the inventor.

24. I understand that a patent applicant is entitled to be his or her own lexicographer (in other words, provide his or her own meaning to a word or phrase) and may rebut the presumption that claim terms are to be given their plain and ordinary meaning. To do so, the applicant must clearly set forth a definition of the term that is different from its ordinary and customary meaning.

25. Where the applicant provides an explicit definition for a term, that definition will control interpretation of the term as it is used in the claim in which it appears. I understand that the specification can also be relied on for more than just explicit lexicography to determine the meaning of a claim term. For example, I understand that the meaning of a particular claim term may also be determined by

implication, that is, according to the usage of the term in the context of the specification.

B. Anticipation

26. I understand that under U.S. Patent Law, 35 U.S.C. § 102, a claim is invalid as anticipated if a single prior art reference discloses each and every limitation of the claimed invention.

27. I am informed that a reference is anticipatory if it contains the claim elements in the same order as claimed, regardless of whether the prior art and the claimed invention are directed to achieving the same purpose.

28. I understand that a prior art reference may anticipate a claim without expressly disclosing a feature of the claimed invention if that missing feature is necessarily present, or inherent, in the single anticipating reference.

29. I am informed that inherency requires more than a probability or possibility that a claimed feature is present in the prior art, but rather that the feature or characteristic is a necessary part of the prior art. I also am informed that recognition of the inherency by a POSITA— at the time— is not required.

C. Obviousness

30. I understand that under U.S. Patent Law, 35 U.S.C. § 103, a claim is invalid as obvious if the differences sought to be patented and the prior art are such that the subject matter as a whole would have been obvious at the time the invention

was made to a person having ordinary skill in the art to which said subject matter pertains.

31. I am informed that an obviousness analysis requires an assessment of the scope and content of the prior art, the differences between the art and the claims at issue, and the level of ordinary skill in the art. I am told that it is against this backdrop that obviousness is assessed.

32. I am informed that a person of ordinary skill in the art (POSITA) is a hypothetical person who is presumed to be aware of all the pertinent prior art. I am also informed that an obviousness analysis may take account of the inferences and creative steps that a POSITA would employ.

VI. THE CHALLENGED PATENTS

A. Background Technology Regarding Dopants

33. Silicon is an example of a semiconductor. In its pure form, it is typically an insulator, but it can become an electrical conductor when impurities called "dopants" are added into the silicon crystal. These dopants are often phosphorous or boron atoms that have one more or one less valence electron than a silicon atom. If the dopant has one less valence electron, then it creates what is called a "hole" where there was an electron, which can be thought of as a positive unit of charge. The extra electrons or holes disturb the local charge equilibrium in the silicon and can become mobile in response to electric fields. Thus, the electrons and holes are called "charge carriers." These dopants can also change the local net electrical charge distribution in the surrounding silicon, influencing the motion of other charge carriers passing by. When the dopant concentration is graded in a particular direction, other charge carriers will move in the gradient direction (or opposite direction) depending on the charge carrier's polarity. This phenomenon is called "carrier drift."

B. Overview of Challenged Patents

34. At the time of invention of the Challenged Patents, most semiconductor devices relied on spatially uniform concentrations of dopants. '014 Patent, Abstract,

1:64-2:11.[1] Dr. Rao (the inventor named on the Challenged Patent) recognized, however, that graded concentrations of dopants can be used to improve certain aspects of the performance of transistors and other semiconductor devices. *Id.*, Abstract, 3:36-47, 4:1-3. The claimed invention is clearly disclosed in, e.g., Figs. 5B-5C of the Challenged Patent, and the corresponding parts of the specification.

35. A surface-channel MOSFET is a common type of transistor capable of controlling current flow at or along the surface of the semiconductor substrate. Ex. 2059, 27 ("carriers propagate at the semiconductor surface"). Figure 5B shows an NMOS[2] transistor that is formed in a p-type surface layer. The transistor comprises (1) a gate; (2) a thin oxide separating the gate from the surface layer; and (3) two doped regions called the source and drain (shaded red). '014 Patent, 3:44-45 ("electrons can be swept from source to drain"), 4:10-11 ("accelerate majority carriers towards the drain"). In Fig. 5B, which is annotated below, the N+ means these regions are heavily doped with an n-type dopant that creates a surplus of

[1] The Challenged Patents share near identical specifications and figures. I cite primarily to the '014 Patent, though identical disclosures will be found in the other Challenged Patents.

[2] MOS stands for "metal oxide semiconductor."

negative carriers (i.e., electrons).[3] The specification explains that the NMOS transistor in Fig. 5B can be a surface-channel MOSFET.

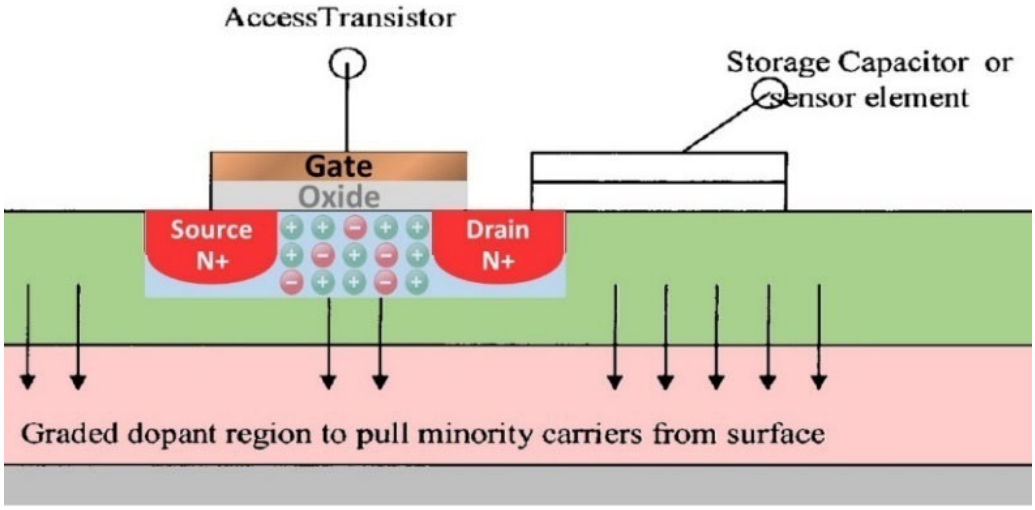

Id., Fig. 5B (annotated); *see also id.*, 4:9-11. Meanwhile, the p-type silicon between the source and drain (shaded blue) has an abundance of positively charged holes (green circles). When the holes separate the source's electrons from the drain's electrons, current cannot flow through the transistor, and the transistor is in an "off" state.

36. When a positive voltage is applied to the gate, an electric field forms in the oxide. This positive electric field repels the "positive" holes downwards, while

[3] An "N" region or layer has more electrons, and thus a "**n**egative charge." A "P" layer has more holes, and a "**p**ositive charge." A "+" or "-" means heavily or lightly doped.

the negative electrons (red circles) are attracted to move into the blue surface layer. When enough electrons have accumulated in the surface layer below the oxide, they form a conductive channel (as annotated in Figure 5B below) of electrons between the source and the drain, and current can begin to flow through the transistor.

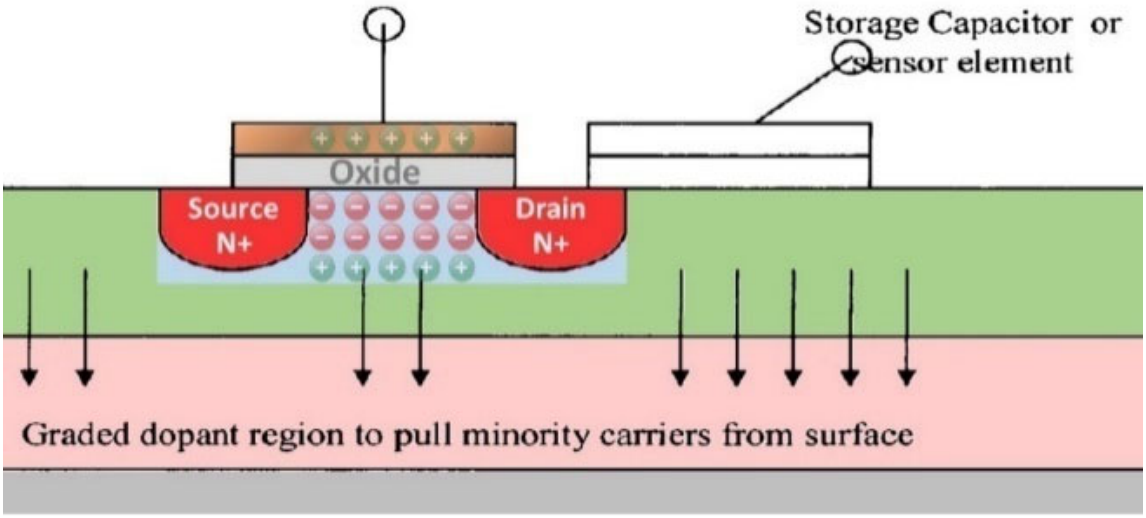

'014 Patent, FIG. 5B (annotated).[4] In order to turn the transistor "off," the positive voltage is removed from the gate and the channel disappears as the holes return to the surface layer.

37. Dr. Rao (the inventor named on the Challenged Patent) recognized that by using graded concentrations of dopants in the well region and a drift layer (shaded pink), it is possible to "pull" carriers from the silicon's surface. '014 Patent, Fig. 5B

[4] Because the channel is formed by electrons with a **n**egative charge, the MOSFET is referred to as an **n**-channel MOSFET, and the "minority carriers" are holes.

(annotated above). In this example, pulling the holes from the surface layer when a positive voltage is applied to the gate, allows the transistor to turn "on" more quickly. This improves the speed and performance of the transistor. '014 Patent, 3:42-47.

VII. OVERVIEW OF ALLEGED PRIOR ART

38. Dr. Blalock's declaration relies on Kawagoe, Wieczorek, and Payne as primary references in the IPRs as follows:

- IPR2024-00263
  - Ground 1 – Kawagoe
  - Ground 2 – Wieczorek in view of Wolf
  - Ground 3 – Kawagoe in view of Gupta
  - Ground 4 – Wieczorek in view of Wolf and Gupta
  - Ground 5 – Kawagoe in view of Silverbrook
  - Ground 6 – Wieczorek in view of Wolf and Silverbrook
- IPR2024-00264
  - Ground I – Kawagoe
  - Ground 2 – Wieczorek in view of Wolf
  - Ground 3 – Kawagoe in view of Gupta
  - Ground 4 – Wieczorek in view of Wolf and Gupta
  - Ground 5 – Kawagoe in view of Silverbrook
  - Ground 6 – Wieczorek in view of Wolf and Silverbrook
- IPR2024-00265
  - Ground 1 – Payne
  - Ground 2 – Sakai in view of Kawagoe
  - Ground 3 – Payne in view of Wolf
  - Ground 4 – Payne in view of Parillo
  - Ground 5 – Sakai in view of Kawagoe and Silverbrook
- IPR2024-00266
  - Ground 1 – Payne
  - Ground 2 – Sakai in view of Kawagoe
  - Ground 3 – Payne in view of Wolf
  - Ground 4 – Payne in view of Parillo
  - Ground 5 – Sakai in view of Kawagoe and Wolf

Below, I provide overviews of relevant portions of Kawagoe, Wieczorek, and Payne.

A. Kawagoe

39. The Petitions rely on Kawagoe as described above. Below is an overview of pertinent portions of Kawagoe relevant to the present dispute.

40. Kawagoe is a patent that:

> relates to a process for manufacturing a semiconductor wafer, a semiconductor wafer, a process for manufacturing a semiconductor integrated circuit device, and a semiconductor integrated circuit device and, more particularly, to a technique which is effective if applied to the so-called 'epitaxial wafer manufacturing process' for forming an epitaxial layer over the surface of a semiconductor substrate body, an epitaxial wafer, a process for manufacturing a semiconductor integrated circuit device by using the epitaxial wafer, and a semiconductor integrated circuit device.

Kawagoe, 1:13-23.

41. Figure 16 of Kawagoe (shown below) is "a section showing an essential portion of a semiconductor integrated circuit device according to" Kawagoe's fourth embodiment. *Id.*, 14:46-49.

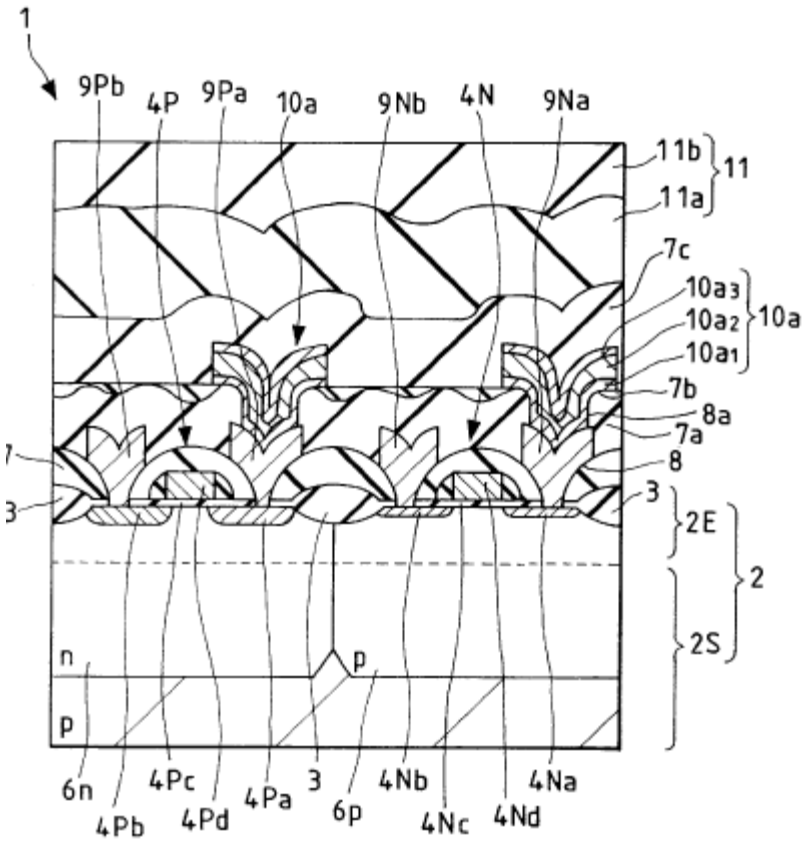

Id., FIG. 16.

42. Figure 16 shows, in part, an n-well 6n and a p-well 6p. Kawagoe discloses that in p-well 6p:

> the impurity concentration of the p-well 6p is given such a gradient that it is gradually lowered in the depthwise direction from the surface of the epitaxial layer 2E, so that the influence to be caused by the carriers (or electrons) due to the α-ray is lowered. Specifically, ***the electrons produced by the α-ray are attracted to the substrate body 2S by that concentration gradient and prevented from entering the p-well 6p*** so that the soft errors can be reduced in case the MIS memory of the

> DRAM or the like is formed in the p-well 6p. The impurity concentration NW in the principal surface of the epitaxial layer 2E of the p-well 6p and the n-well 6n is at about 6×10^{16} atoms/cm^3, so that the impurity concentration of the p-well 6p and the n-well 6n is at 5×10^{15} to 6×10^{16} atoms/cm^3.

Id., 16:2-15 (emphasis added). Figure 23 (shown below) "is a section of the essential portion of the semiconductor substrate at the step … of manufacturing the semiconductor integrated circuit device of FIG. 16":

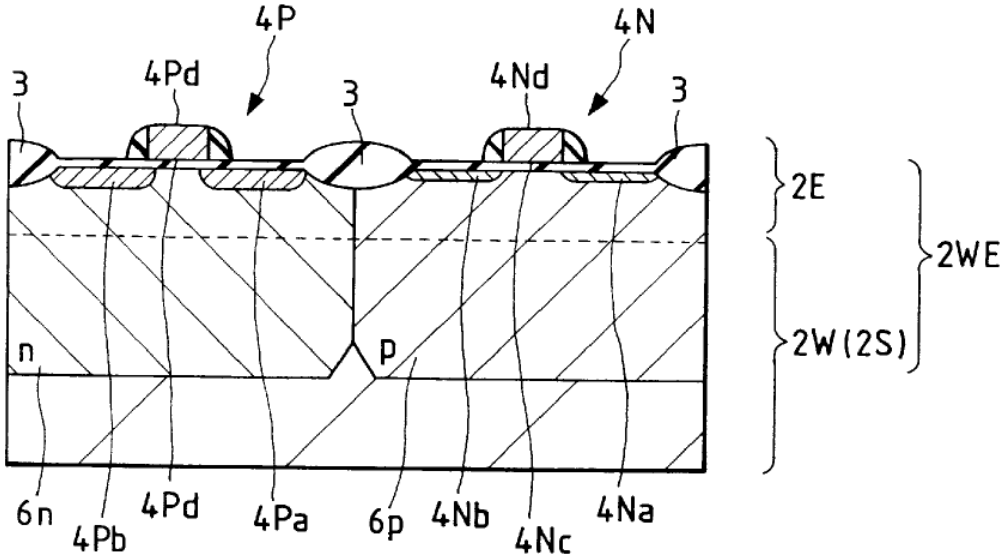

Id., 6:1-4.

B. Wieczorek

43. The Petitions rely on Wieczorek as described above. Wieczorek is a patent publication that "relates to the field of manufacturing integrated circuits, and, more particularly, to a semiconductor device, such as a field effect transistor, having

an improved retrograde dopant profile in a channel region of the transistor element, and a method of manufacturing such a semiconductor device." Wieczorek, ¶[0002].

44. Much of the Petition's discussion focuses on Figures 1B and 2B (shown below), which are described in a relatively cursory manner in the background section of Wieczorek. The entirety of Wieczorek's description of Figure 1B is:

> FIG. 1b schematically shows the semiconductor device 100 in an advanced manufacturing stage. In FIG. 1b, the semiconductor device 100 comprises within the P-well structure 110 heavily N-doped source and drain regions 131, including lightly doped extensions 132. In the N-well structure 120, similarly, heavily P-doped source and drain regions 141, including lightly doped extensions 142, are provided. A gate insulation layer 135, for example, a gate oxide layer, is provided on the entire surface of the semiconductor device 100 to separate a gate electrode 134 from a corresponding channel region 136 and a gate electrode 144 from the corresponding channel region 146. Spacer elements 133 are provided at the sidewalls of the gate electrode 134 and respective spacer elements 143 are located at the sidewalls of the gate electrode 144. Thus, the semiconductor device 100 includes an N-channel transistor 130 and a P-channel transistor 140.

Wieczorek, ¶[0012]; *see also id.*, ¶[0020] ("FIGS. 1a-1b show schematic cross-sectional views of an exemplary conventional semiconductor device at different manufacturing stages.").

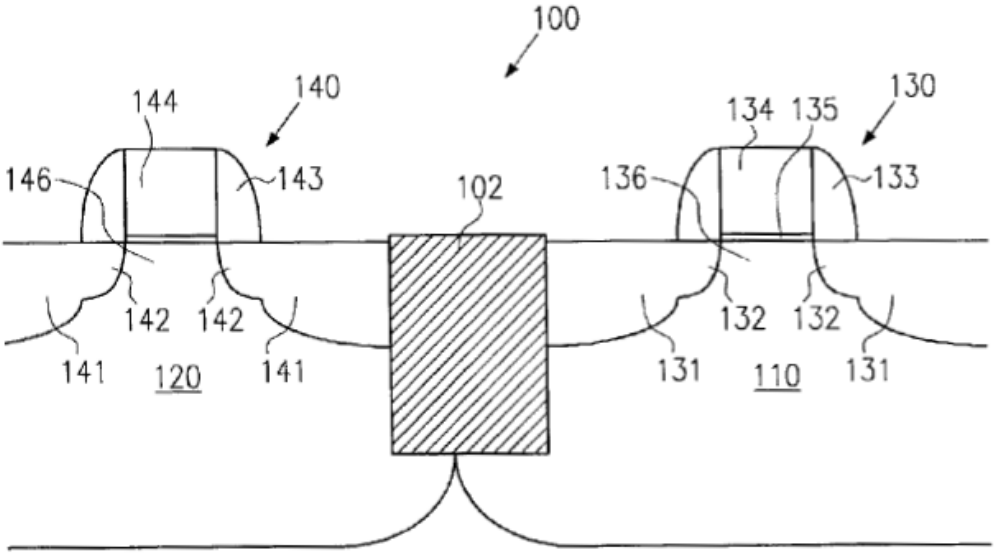

FIG.1b
(Prior Art)

Id., FIG. 1B.

45. Figure 2B (shown below) is described in the background section of Wieczorek:

> FIG. 2b shows a corresponding graph with a typical dopant profile with respect to the depth of the respective well structure. Due to the up-diffusion of the dopant atoms during the heat treatment, the initially retrograde profile in the vicinity of the surface of the semiconductor device 100, as indicated by reference number 200, may have become substantially uniformly distributed.

Id., ¶[0011].

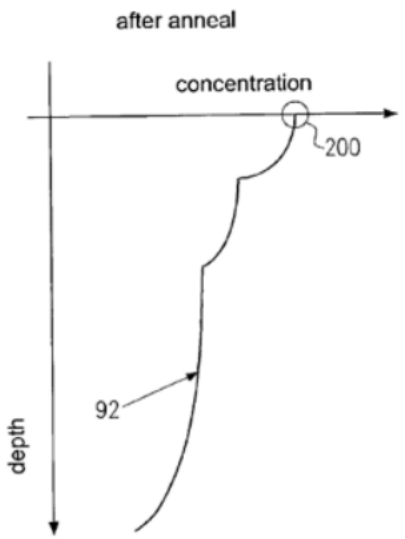

FIG.2b
(Prior Art)

Id., FIG. 2B.

C. Payne

46. The Petitions rely on Payne as described above. Below is an overview of pertinent portions of Payne.

47. Payne is a patent that "relates to complementary field effect transistors formed by ion implantation, and in particular to a structure and method of fabrication which permit high packing density." Payne, 1:5-8. Much of the -00265 and -00266 Petitions' discussion focuses on Figures 10 and 11 of Payne. Payne describes a CMOS device shown in Figure 10 (shown below):

> The oxide layer can then be stripped off, for example, with a solution of dilute HF, and fabrication may proceed in accordance with standard techniques to produce the CMOS device depicted in FIG. 10. The p-channel device includes source and drain regions, 21 and 22, respectively, of P+ conductivity type formed with the N surface region, 18. Similarly, the n-channel device includes source and drain regions, 23 and 24, of N + conductivity type formed within the P surface region 20.

Id., 5:18-27.

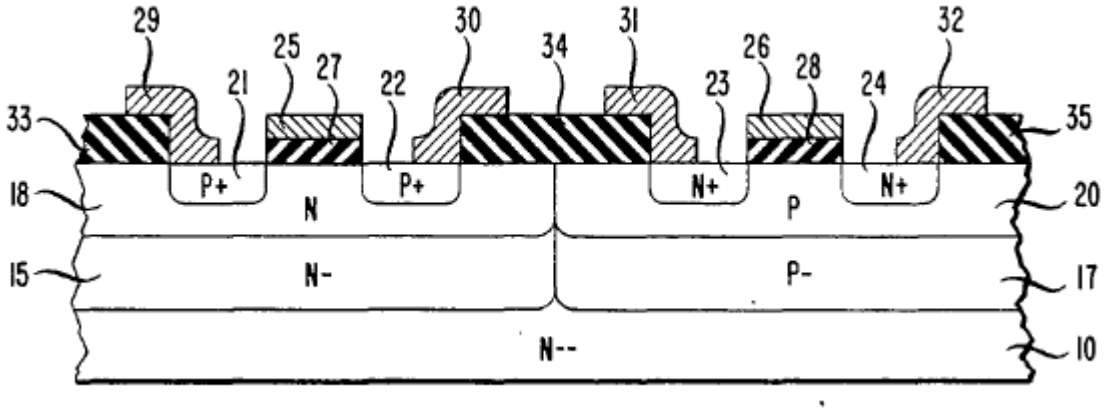

Id., FIG. 10. Figure 10 shows an N- tub 15 and a P- tub 17. *Id.*, 3:35-39 (describing N- tub 15), 4:12-14, 5:3-5 (describing P- tub 17). Payne discloses that after a heating step, "[t]he resulting impurity profile in both tubs thereby has the general shape illustrated in FIG. 11, where the abscissa is depth and the ordinate is impurity concentration." *Id.*, 5:14-17.

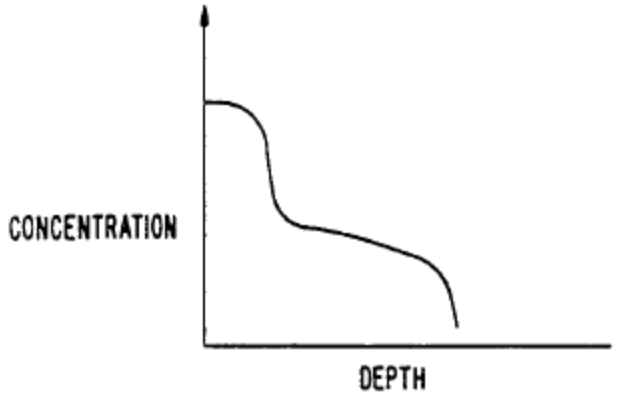

Id., FIG. 11; *see also id.*, 2:38-41 ("FIG. 11 is an illustration of the approximate concentration of implanted impurities as a function of depth in the semiconductor for a device in accordance with one embodiment of [Payne].").

VIII. CLAIM CONSTRUCTION

48. I understand that claim terms are typically given their ordinary and customary meaning, as would have been understood by a person of ordinary skill in the art at the time of the alleged invention. In considering the meaning of the claims, I also understand that one must consider the claim language, specification, prosecution history, and the knowledge of a person of ordinary skill in the art at the relevant time. I understand that Patent Owner is not proposing any claim terms for claim construction. I agree with Patent Owner that none of the terms require construction. I applied the above understanding in my analysis.

IX. THE CITED REFERENCES DO NOT DISCLOSE OR SUGGEST ALL THE FEATURES OF THE CHALLENGED CLAIM

49. In my opinion, the prior art references relied upon in the Petition and Dr. Blalock's declaration (Ex. 1003) do not disclose or suggest all the features of the Challenged Claim, as I explain below.

A. Dr. Blalock's Kawagoe-based analysis is incorrect regarding the "aid carrier movement" limitations.[5][6]

50. In each of the Grounds that reference Kawagoe, Dr. Blalock relies on Kawagoe to suggest that the "aid carrier movement" limitations are disclosed or rendered obvious. *See, e.g.*, IPR2024-00263, Ex. 1003, ¶¶90, 99. I disagree. He

---

[5] For the purposes of this Declaration, "aid carrier movement" and "aid the movement of minority carriers" are used interchangeably.

[6] In IPR2024-00263, Elements [1.6]/[21.6] and [1.7]/[21.7] of the '014 Patent recite "aid carrier movement."

In IPR2024-00264, Elements [1.5]/[20.5] and [1.6]/[20.6] of the '481 Patent recite "aid carrier movement."

In IPR2024-00265, Elements [7.4] and [7.5] of the '502 Patent recite "aid the movement of minority carriers."

In IPR2024-00266, Elements [1.4] and [1.5] of the '502 Patent recite "aid the movement of minority carriers."

did not identify any portion of Kawagoe that actually discloses the "aid carrier movement…" feature of these claim elements.

51. For the "aid carrier movement" feature of the Challenged Claims, it appears that Dr. Blalock made inferences based on Kawagoe's disclosures, and I disagree with his inferences. Specifically, he introduced Kawagoe as a primary or secondary reference for his analysis for mapping to the claimed "graded dopant concentration" limitation, and used that to infer that the "aid carrier movement" limitation of the Challenged Claims is disclosed. But while Kawagoe does disclose a "concentration gradient," Dr. Blalock misses the context of Kawagoe. In general, there are three possibilities: a reference disclosing a dopant concentration gradient in a semiconductor device could a) teach that the concentration gradient aids carrier movement; b) teach that the concentration gradient impedes carrier movement; or c) be silent as to the concentration gradient aiding or impeding carrier movement. Kawagoe teaches using a concentration gradient to *impede* carrier movement. Kawagoe is concerned with naturally occurring α-rays striking a semiconductor device and generating free electrons in the substrate.[7] Kawagoe's free electrons can

[7] As I explained above in Section II, I am familiar with α-rays and have experience with them, including in the time period preceding 2004 (which I understand is the earliest claimed priority date of the Challenged Patent).

disrupt the operation of the device during a "single event upset" ("SEU"). Dr. Blalock fails to appreciate that Kawagoe teaches a "concentration gradient" to "*prevent*[] [the SEU-generated carriers] from entering the p-well." Kawagoe, 16:7-11 (emphasis added). Below, I reproduce the portion of Kawagoe's specification containing the disclosure about preventing carriers from entering the p-well.

16

from the principal surface (having an impurity concentration N_W) of the epitaxial layer **2**E. Thus, the impurity concentration of the p-well **6***p* is given such a gradient that it is gradually lowered in the depthwise direction from the surface of the epitaxial layer **2**E, so that the influence to be caused by the carriers (or electrons) due to the α-ray is lowered. Specifically, the electrons produced by the α-ray are attracted to the substrate body **2**S by that concentration gradient and prevented from entering the p-well **6***p* so that the soft errors can be reduced in case the MIS memory of the DRAM or the like is formed in the p-well **6***p*. The impurity concentration N_W in the principal surface of the epitaxial layer **2**E of the p-well **6***p* and the n-well **6***n* is at about 6×10^{16} atoms/cm^3, so that the impurity concentration of the p-well **6***p* and the n-well **6***n* is at 5×10^{15} to 6×10^{16} atoms/cm^3.

Id., 16:1-15.

52. In my opinion, a POSITA would have understood that Kawagoe shows that graded dopant concentrations don't *always* aid carrier movement, as Petitioner claims, because sometimes the "concentration gradient" can "prevent" carrier movement.

53. I see that Dr. Blalock testified at his deposition about a force in the context of a concentration gradient. Ex. 2058, 89 ("**Q.** How do you know the magnitude of the force a dopant concentration puts on carriers? **A.** … Anyway, it's related to the -- the steepness of the gradient, the slope of the concentration gradient. And that was also well known by a POSITA as well, which the patent owner pointed out also.") (emphasis added), 126-127 ("**Q.** And you just said, 'if you have a gradient, you'll get a force and it will tend to move carriers.' Will it move carriers or -- what do you mean "tend to move carriers"? **A.** Well, it creates a force on the carriers. ***All other things being equal***, they'll move. I mean, you could have, I suppose -- I don't want to theorize…."), 213 (**Q.** So if you had an electric field that applied a force to an electron moving in material, how would a recombination rate impact the travel of that electron? **A.** *As the recombination rate gets higher* and higher, it will travel -- on average, it will travel a shorter distance ….), 187 ("**Q.** And you said that there could be some additional force. Do you recall that testimony? A. I said they would move ***if you didn't have some other external force acting***. I also pointed out that the movement is a statistical process. ***So it's not like you can reach in and say that carrier will move in this direction***.") (all emphasis added).

54. In my opinion, a POSITA would have known that if two forces are acting on an object in opposite directions, both forces cannot aid its movement. Either the opposing forces are equal—and there is no movement—or the two forces

are not equal and the object moves in the direction of the force having larger magnitude, albeit diminished by the counter force. The smaller force does not "aid" the movement of the object, because it is pushing *against* the movement. The magnitude of the concentration gradient plays a substantial role, because a small gradient may not be sufficient to overcome the resistance of the material in which the gradient exists.

55. I see that in response to the question "have you looked at any aspect of the gradient other than its being downward sloping?" Dr. Blalock replied: "As I've said, the patent owner tells us that that's sufficient, so ***[t]hat's what I did. I have not done calculations of the slope per se***." Ex. 2058, 195 (emphasis added). And in response to the question: "Do you need to know the magnitude of the force on carriers to know if their movement is being aided?" Dr. Blalock said: "Well, the patent owner -- the patent hasn't given us a threshold for aiding. … *when I look at the prior art, when I find a concentration gradient*, … *if there was a gradient, then it was producing that force and aiding the movement*." Ex. 2058, 91-92 (emphasis added). Since the mere direction of the gradient is *not* sufficient to determine whether there is a "net force"—the premise of Dr. Blalock's analysis is incorrect. Therefore, I disagree with his conclusion about the "aid carrier movement…" feature being taught in the prior art (apparently by Kawagoe, though Dr. Blalock's declaration does not clearly say that Kawagoe inherently teaches the "aid carrier

movement…" feature). As I explained above, since Kawagoe teaches inhibiting carrier movement, it does not teach aiding carrier movement. The SEU event is described as creating electrons, which are the minority carriers in a p-well, but not in an n-well. Kawagoe is not relevant for an n-well.

56. The carriers that Kawagoe's graded dopant concentration affects are in the wrong place in Dr. Blalock's analysis. The Challenged Claims require "aid[ing] carrier movement" from the "surface" or an "active region" to the substrate to an area of the substrate where there are no active regions, or to a second surface of the substrate. Kawagoe's electrons are much deeper than the surface layer.

57. In another IPR against a related patent (IPR2021-01242), I see that Dr. Blalock stated in a footnote that SEUs generate "electrons produced in the large substrate body below the wells"—far below the surface layer. *See* IPR2021-01242, Ex. 2076, ¶94 n.6. Dr. Blalock confirms that alpha ray SEUs produce electrons, not holes. Kawagoe's electrons are initially ***below*** p-well 6p, and prevented from moving ***upward*** into p-well 6p. Kawagoe does not address carriers at the surface layer, and does not disclose a drift field "to aid the movement of carriers from the *surface layer* to [an | the] area of the substrate where there are no active regions" as required by the Challenged Claim, because Kawagoe's carriers are nowhere near the surface layer of Kawagoe's device. Recall that the dopant gradient keeps the alpha particle-generated electrons (SEU) from entering the well. Since the well starts at

the surface and extends down to the depth 2WE, the generated electrons must originate in the substrate below the wells, in the area highlighted in orange.

58. Thus, Kawagoe does not disclose or suggest the feature "aid[ing] carrier movement" from the "surface" or an "active region" to the substrate to an area of the substrate where there are no active regions, or to a second surface of the substrate recited in the Challenged Claims. The Petition and Dr. Blalock's declaration do not rely on Sakai (the primary reference in the Sakai-Kawagoe obviousness combination Grounds) for this feature. Therefore, in my opinion, each of the Petitions and Dr. Blalock's declarations are deficient in their analysis of the "aid carrier movement" limitations of the Challenged Claims.

B. Dr. Blalock's Wieczorek-based analysis is incorrect regarding the "aid carrier movement" limitations.

59. In each of the Grounds that reference Wieczorek, Dr. Blalock relies on Wieczorek to suggest that the "aid carrier movement" limitations are disclosed or rendered obvious. *See, e.g.*, IPR2024-00263, Ex. 1003, ¶¶152, 160. I disagree. He did not identify any portion of Wieczorek that actually discloses the "aid carrier movement…" feature of these claim elements.

60. Dr. Blalock stated in his declaration that "Wieczorek in combination with Wolf (hereinafter, 'Wieczorek-Wolf') renders claims 1-2, 4-9, 13-23, 25-28, and 32-42 obvious." Ex. 1003, ¶137. I disagree. For the "aid carrier movement"

limitations of the independent claims challenged by Petitioner in these IPRs, Dr. Blalock provided Wieczorek-based analysis in a consolidated section (*see, e.g.*, IPR2024-00263, Ex. 1003, ¶¶156-163 and ¶¶164-167), but I disagree with his analysis in those sections. As he did for the Kawagoe-based ground regarding claim 1, Dr. Blalock didn't actually identify anything in Wieczorek that discloses the "aid carrier movement…" feature of the above elements. IPR2024-00263, Ex. 1003, ¶¶156-163.

61. Dr. Blalock testified that he did not calculate the slope of the concentration gradient that he said Wieczorek discloses. Ex. 2058, 195 ("Q. And regarding any of these three references [including Wieczorek], for the mapping of the claim phrase 'aid carrier movement,' have you looked at any aspect of the gradient other than its being downward sloping? … THE WITNESS: As I've said, the patent owner tells us that that's sufficient, so [t]hat's what I did. I have not done calculations of the slope per se."). It would have been impossible for Dr. Blalock to make such a calculation because the dopant gradient Petitioner points to in Figure 2B (and Wieczorek generally) does not have any values from which one could calculate a slope. In mathematical terms, the slope in each direction (X, Y, and Z) is known formally as the gradient vector. The magnitude of the slope is essential to determine the magnitude of the force the dopant gradient places on the carrier and thus the net force.

C. Dr. Blalock's Payne-based analysis is incorrect regarding the "aid carrier movement…" limitations in IPR2024-00265 and -00266.

62. In both IPR2024-00265 and -00266, Dr. Blalock stated in his declaration that Payne discloses or, at a minimum, renders obvious the "aid the movement of minority carriers" limitation. I disagree, at least for similar reasons as I discussed above in Section IX.A regarding Kawagoe. Dr. Blalock points to Figures 10-11 of Payne for the claimed "graded concentration of dopants" limitations in IPR2024-00265 and -00266. But for the claimed "aid carrier movement" feature of limitations, Dr. Blalock relies entirely on Greenthread's supposed admissions:

> Payne's downward-sloping graded-dopant concentration aids the movement of minority carriers from the surface layer to the substrate—more precisely, to an area of the substrate where there are no active regions, as discussed above— <u>*to the same extent*</u> to which Applicant relied on the prior art and admitted to the Patent Office that such carrier movement would occur under the same scenario.

Ex. 1003, ¶95 (emphasis added); *see also id.*, ¶¶117, 120. Dr. Blalock did not analyze anything actually disclosed in Payne for the "aid carrier movement…" feature. *See, e.g.*, IPR2024-00265, Ex. 1003, ¶¶90-121.

63. Dr. Blalock testified that he did not calculate the slope of the concentration gradient that he said Payne discloses. Ex. 2058, 165 ("Q. And where did you analyze the slope of Payne's gradient in your declaration? … THE

WITNESS: This is why I'm citing to the patent. I don't -- if there's a gradient, the applicant has said -- oh, yes, here it is. Depends solely on the slope. The patent owner has said, if there's a gradient, that's enough. You know, if there's -- ***if there's a gradient of this trend, high or low, as you go deeper into the substrate, then that is sufficient***. The carriers will move.") (emphasis added); *see also id.*, 167 (Q. So you're relying just on the property of it being downward sloping and not the particular slope; right? A. There's no teaching in the patent about a necessary particular slope."), 167-168 ("Q. The particular slope that you mentioned in your earlier response, you did not analyze any particular slope of Payne, did you? … THE WITNESS: I did not measure the slope and do a set of calculations. However, it's already been disclosed that downward -- a downward-sloping gradient is sufficient. ***And I've looked at this figure and I see that it's a downward-sloping gradient, and so it meets it.***") (emphasis added).

64. The magnitude of the slope is essential to determine the magnitude of the force the dopant gradient places on the carrier and thus the net force.

65. Dr. Blalock stated that "[d]uring a so-called single event upset (SEU), an α-ray generates millions of carriers, some of which are produced in or near the active region at the surface of the substrate." Ex. 1003, ¶100. The only document he cited in support of that statement is Wang. It appears that Wang is a document from 2008. IPR2024-00263, Ex. 1003, ¶¶18, 100 (citing Wang); Pet., v (Table of

Exhibits, listing "2008" for Wang); IPR2024-00263, Wang, 429 (listing copyright date of 2008). I do not believe that Wang shows what a POSITA would have known about SEU carriers in the active region at the time of the Challenged Patent. Wang does not give a POSITA a reason to use Kawagoe's technique in the active region. Wang's Figure 2 (cited by Dr. Blalock, *see* Ex. 1003, ¶100, and shown below)—just like Kawagoe—shows that the SEU carriers are primarily generated deep in the device.

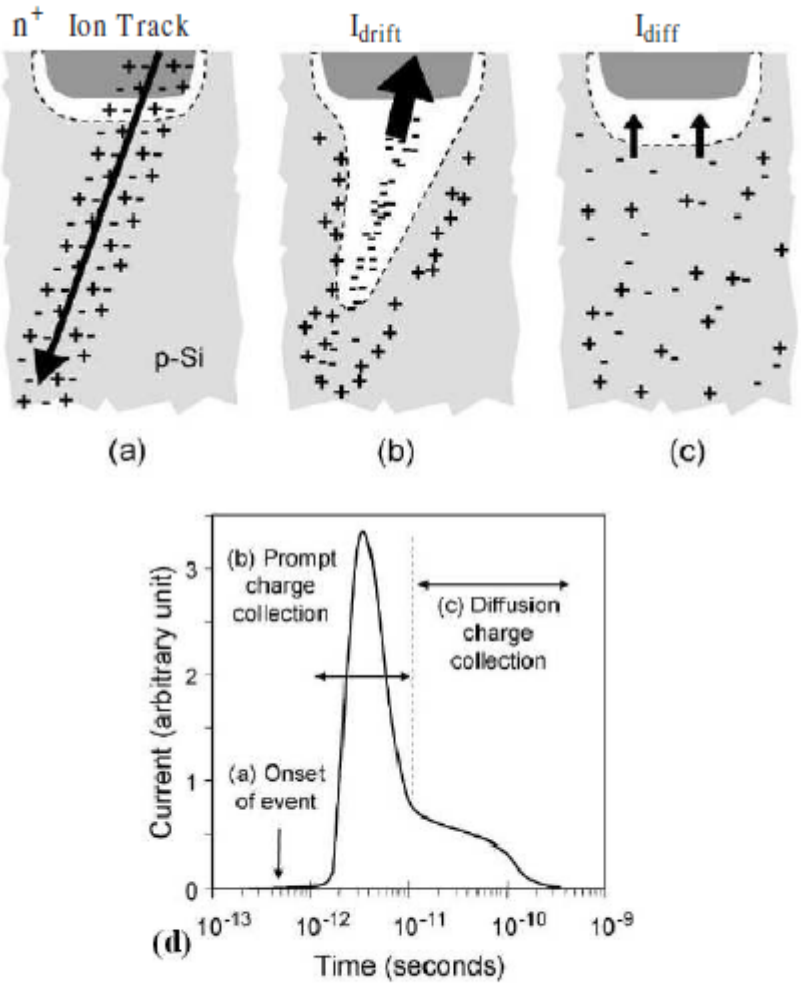

Fig. 2. Schematic representation of charge collection in a silicon junction immediately after (a) an ion strike, (b) prompt (drift) collection , (c) diffusion collection, (d) the junction current induced as a function of time [4].

Wang, FIG. 2. Wang shows some carriers in the active region, but does not disclose that they are problematic.

66. Dr. Blalock's analysis of Kawagoe's disclosure regarding electrons generated by alpha-rays is incorrect. A POSITA would have understood that when Kawagoe mentions "electrons produced by the α-ray" (Kawagoe, 16:7-11),

Kawagoe is <u>*not*</u> describing electrons near the surface. Nishizawa (Ex. 2060), demonstrates the knowledge of a POSITA:

> Accordingly, it will be understood that the alpha-particle immediately after irradiation to the surface of a semiconductor body has an energy of several MeV, for example about 5 MeV, and that, accordingly, ***the probability of creation of electron-hole pairs is extremely low near the surface***. The alpha-particle will begin to create electron-hole pairs after it has entered into the semiconductor substrate to a certain distance.

Ex-2060, 19:21-34; *see also id.*, 20:19-22 ("[T]he amount of electrons created which adversely affect the memory action is no greater than only 10% of the stored electric charge, and thus it can be disregarded."). To the extent that any electrons are created near the surface, they are taught that they are not a problem. Hence, there would be no reason to solve a nonexistent problem.

67. During cross-examination, Dr. Blalock testified that the location of an alpha-ray strike cannot be predicted. Ex. 2058, 147-148 ("Q. In that passage that you quoted of Kawagoe, it doesn't say that some of the electrons produced by the alpha ray are up near the surface; right? Can you point me to where it says that? … THE WITNESS: Kawagoe doesn't need to say that. This is obvious. ***If you have a random alpha ray strike, you cannot predict where it will happen.*** …" (emphasis added). But Dr. Blalock misses that even if the location of an alpha-ray strike cannot

be predicted, a POSITA would have known that the probability of the alpha-ray strike *creating electrons* (like disclosed in Kawagoe, Kawagoe, 16:7-11) is *extremely low* near the surface (as demonstrated by Nishizawa). Therefore, in my opinion, the better reading of Kawagoe is that Kawagoe is describing electrons "***produced in the large substrate body below the wells***," as Dr. Blalock conceded. Thus, a POSITA would have understood that Kawagoe's electrons that are prevented from entering the p-well are *not* created near the surface. Thus, Kawagoe does not teach aiding movement of carriers from the surface layer to an area of the substrate where there are no active regions.

68. I reviewed OnSemi's replies and Greenthread's surreplies for IPRs 2023-01242, 2023-01243, and 2023-01244. I also reviewed OnSemi's demonstratives from the hearing on November 13, 2024. Ex. 2087. Based on my review of these documents, it is clear that OnSemi is misinterpreting Kawagoe and my deposition testimony. As explained more fully below, OnSemi's demonstratives contain certain errors and misrepresentations, and Kawagoe contains numerous inconsistencies.

69. Because Kawagoe contains so many inconsistencies, it is impossible to tell for sure what Kawagoe intended to achieve with the dopant concentrations shown in Figure 17. The only plausible explanation is that it was intended solely to keep the electrons in the "large substrate body below the wells." Dr. Blalock admits

in footnote 6 of his declaration that the electrons originate in the "large substrate body below the wells."

> Kawagoe states that "electrons produced by the a-ray [are]…prevented from entering the p-well 6p…" Ex. 1007, 16:7-9. This refers to electrons produced in the large substrate body below the wells, by far the largest volumetric region of any chip. See Ex1009, Fig. 2.

Ex. 1003, 47 N.6. In Kawagoe's own words, the electrons are "attracted to the substrate body 2S" by Figure 17, and Figure 17 "prevents" the electrons "from entering the p-well 6p." This does not mean that the electric field created by Figure 17 "moves" the electrons from the p-well to deeper in the substrate. Rather it simply means that the electrons stay in the "large substrate body below the wells" where the electrons were produced.

70. The basic laws of electronics and physics guarantee that the electric field identified by Petitioner in its demonstratives would not aid carrier movement (move) an electron ***from*** the active region portion (surface) of the p-well ***to*** the non-active region portion of the p-well (substrate). This would be impossible. To the extent this electric field moves an electron at all, it would ***not*** move it from the surface to the substrate. Rather it would move the electron in the ***opposite*** direction ***from the substrate to the surface***. This is because an electron moves in the opposite direction of an electric field towards the source of the electric field, where the positive charge is the greatest.

71. It is irrefutable that an electron moves in the opposite direction of an electric field. This is one of the most basic laws of electronics and physics. As I explained at the outset of my declaration, and numerous exhibits from IPRs 20023-01242, 2023-01243, and 2023-01244 opposite charges attract, and electrons move in the opposite direction of electric fields. To the extent there is any doubt that electrons move in the opposite direction of electric fields, I have attached several textbooks to confirm this fundamental law of electronics and physics. In addition, Monolithic's expert Dr. Campbell confirmed this during his deposition for Monolithic's IPRs against the same Greenthread patents at issue here. Ex. 2085, 33:14-34:14.

72. I never testified that Figure 17 would act on an electron ***in the p-well*** to move an electron from the surface of the p-well to the substrate portion of the p-well. When asked whether an electric field resulting from the graded dopant concentration of Figure 17 would sweep electrons from the active region down into the substrate, I answered: "It doesn't disclose that it does that." Ex. 1052, 121:11-17. As I explained shortly thereafter, "the patent only describes that this dopant gradient is able to keep SEU electrons out of the well. It doesn't tell you what's happening in the well." Ex. 1052, 122:6-9. To the extent the electric field "sweeps" electrons at all, it certainly would not "sweep" them from the active region down into the substrate. It would "sweep" them in the ***opposite*** direction ***to*** the active

region. This is why the only plausible reading of Kawagoe is that whatever Figure 17 is doing, Figure 17 is keeping the electrons "in the large substrate body below the wells" were they were produced.

73. Referring back to paragraphs 36 and 37 of my declaration for IPRs 20023-01242, 2023-01243, and 2023-01244, I explained that when an electric field is pointing ***from*** the surface ***to*** the substrate, the "positive electric field repels the 'positive' holes downwards, while the negative electrons (red circles) are attracted to move into the blue surface layer." Ex. 2057, ¶¶ 36-37.

74. More specifically, in paragraph 36, I explained that when a positive voltage is applied to the gate, an electric field forms in the oxide. Because the positive voltage is greatest at the surface, and it decreases deeper in the substrate, the electric field points ***from*** the surface ***to*** the substrate in a ***downward*** direction. As I explained in Paragraph 36, when holes and electrons encounter an electric field in a downward direction, and they do move due to this electric field, the positively charged holes move in the ***same*** direction as the electric field in a ***downward*** direction. The negatively charged electrons move in the ***opposite*** direction of the electric field in an ***upward*** direction.

75. I further explained in paragraph 37, what happens when a graded dopant concentration creates an electric field like the one shown in Fig. 5B of the Greenthread patents. In the example shown in Fig. 5B, the electric field is pointing

in the same downward direction as the electric field created when a positive voltage is applied to the gate. As I explained Dr. Rao "recognized that by using graded concentrations of dopants in the well region and a drift layer (shaded pink), it is possible to 'pull' carriers from the silicon's surface." But an electric field does not "pull" holes and electrons in the same direction. As I explained in the next sentence, an electric field pointing in the downward direction would only "pull[] the holes from the surface layer when a positive voltage is applied to the gate." It would cause electrons to move in the opposite direction to the surface layer. Because the electric field from the graded dopants is pulling the holes in the same direction as the electric field created by the gate voltage, it is possible for the graded dopants to aid carrier movement from the surface to the substrate. If, on the other hand, the electric field was pushing holes in the other direction to the surface, it would not be aiding carrier movement from the surface to the substrate. Instead of aiding carrier movement in the correct direction, it would create two electric fields pointing in opposite directions, where the movement of the hole would ultimately depend on the net effect of the two fields (*i.e.*, which field has a greater magnitude).

76. My testimony in paragraphs 36 and 37 of my declaration is further supported by the highly regarded textbook, Howe and Sodini, *Microelectronics, An Integrated Approach*, Prentice Hall Electronics and VLSI Series (1997) ("Howe"). OnSemi submitted this textbook as Exhibit 1037 in IPRs 20023-01242, 2023-01243,

and 2023-01244, and it just happens that pages 36, 37, and 39 confirm exactly what I described in paragraphs 36 and 37 of my declaration.

77. Page 36 of Howe explains that the drift velocity of the electrons is negative.

36 *Chapter 2* ■ *Semiconductor Physics and IC Technology*

using the three sample trajectories in Fig. 2.7(b). Dividing the average position change by the time interval, we define the **drift velocity** of the electrons as

$$v_{dn} = \frac{\overline{\Delta x}}{\Delta t} \tag{2.33}$$

which is negative for $E > 0$. Note that the drift velocity is the average net velocity for a huge number of electrons in a region of the silicon lattice. Experimentally, the drift velocity v_{dn} is found to be proportional to the electric field

electron drift velocity

$$\boxed{v_{dn} = -\mu_n E} \tag{2.34}$$

where μ_n is the **electron mobility** with units of $cm^2/(Vs)$.

The electron mobility is a function of both the temperature and total doping concentration. Mobility decreases with increasing temperature since thermal agitation causes lattice vibrations to scatter electrons. Ionized dopants also scatter electrons

IPR2024-00263, Ex. 1037, Page 18.

78. Page 37 of Howe explains how the holes move in the opposite direction "with" the electric field.

Holes also drift in an electric field—the holes drifting *with* the field on average, because the positive charge causes them to accelerate in the same direction as E between collisions. The drift velocity for holes is also proportional to the electric field

$$\boxed{v_{dp} = \mu_p E} \tag{2.35}$$

hole drift velocity

Ex. 1037, page 19.

79. On page 39 of Howe, Figure 2.11 shows how holes "drift…from left to right." Meanwhile, the electrons move in the opposite direction. That is, the

electrons "drift from right to left." OnSemi's own exhibit confirms that electrons move in the opposite direction of the electric field: "For electrons, the drift velocity is opposite to the electric field as shown in Fig. 2.11(b)." This is the same fundamental law that I described in paragraphs 36 and 37 of my declaration.

80. Paragraphs 36 and 37 of my declaration are further supported by the highly regarded textbook, *Hodges et al*., Analysis and Design of Digital Integrated Circuits in Deep Submicron Technology, 3rd Ed., McGraw-Hill (2004) ("Hodges"). OnSemi submitted this textbook as Exhibit 1038 in IPRs 20023-01242, 2023-01243, and 2023-01244. Page 41 of Hodges confirms that electrons move in the opposite direction of the electric field towards the source of the electric field.

> The value of V_{GS} needed to cause this $-2\phi_{Fp}$ change in surface potential is defined as the *threshold voltage* V_T for a MOS transistor. This condition is known as *strong inversion.* In essence, the semiconductor surface that is normally *p*-type becomes *n*-type. Further increases in gate voltage produce only slight changes in ϕ_S and the depletion-layer thickness. However, it increases the electric field across the gate oxide and increases the electron concentration in the channel. The additional electrons are drawn into the inversion layer from the strongly *n*-type source for drain, with the positive surface potential as the attractive force.

Ex. 1038, page 68. Again OnSemi's own exhibit confirms that electron move in the opposite direction of the electric field.

81. My testimony in paragraphs 36 and 37 of my declaration is further supported by the highly regarded textbook, Kittel, Introduction to Solid State Physics, 8th Ed., John Wiley & Sons (2005). Page 197 of Kittel confirms that holes and electrons move in opposite directions.

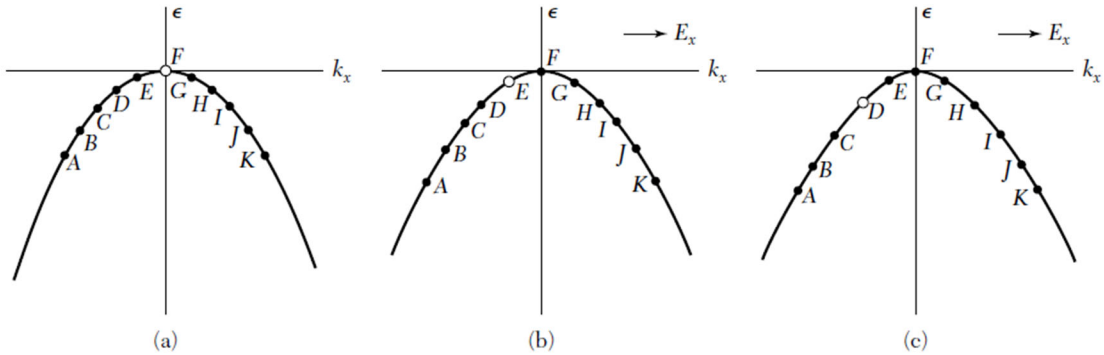

Figure 9 (a) At $t = 0$ all states are filled except F at the top of the band; the velocity v_x is zero at F because $d\epsilon/dk_x = 0$. (b) An electric field E_x is applied in the $+x$ direction. The force on the electrons is in the $-k_x$ direction and all electrons make transitions together in the $-k_x$ direction, moving the hole to the state E. (c) After a further interval the electrons move farther along in k space and the hole is now at D.

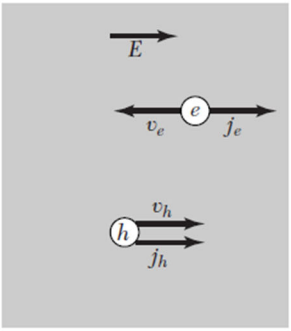

Figure 10 Motion of electrons in the conduction band and holes in the valence band in the electric field E. The hole and electron drift velocities are in opposite directions, but their electric currents are in the same direction, the direction of the electric field.

82. My testimony in paragraphs 36 and 37 of my declaration is further supported by the testimony of Dr. Campbell. During his deposition, he testified that in order to move holes, "you have to have the electric field that points downward." Ex. 2085, 33:14-34:14. And in order to move electrons, "the electric field has to be pointing upward." *Id*.

14 Q. So, about the middle of the page
15 there's a sentence that you say, "As will be
16 discussed these charged species move in response
17 to an electric field, and so, an electric field
18 that is properly constructed will push the
19 minority carriers away from the surface, making
20 their collection much less probable."
21 Do you see that sentence?
22 A. Yes, I do.

Page 34

1 Q. What did you mean by
2 "properly constructed"?
3 A. You would have to construct an
4 electric field that moves the carriers away, and
5 that means the electric field has to be, the
6 direction has to be correct.
7 If you're moving poles, then you
8 have to have the electric field that points
9 downward.
10 If you're moving electrons, the
11 electric field has to be pointing upward and you
12 have to have a sufficient electric field
13 intensity to prevent most of the carriers from
14 being collected by the drain.

83. As I mentioned above, OnSemi's demonstratives contain errors and misrepresentations. For example, OnSemi alleges in Demonstrative 14 (Ex. 2087) that "Kawagoe has a graded dopant concentration to aid carrier movement."

Kawagoe has a graded dopant concentration to aid carrier movement

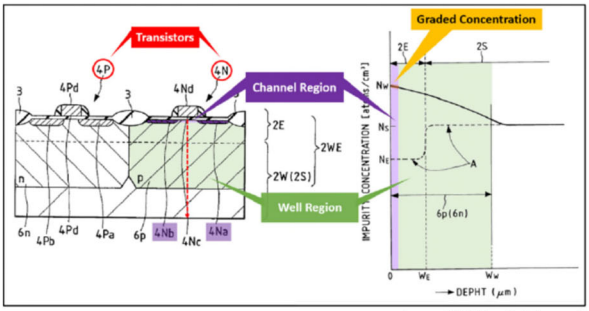

Kawagoe, EX1007, Figs. 17, 23 (annotated)

"Thus, the impurity concentration of the p-well 6p is given such a gradient that it is gradually lowered in the depthwise direction from the surface of the epitaxial layer 2E, so that the influence to be caused by the carriers (or electrons) due to the α-ray is lowered. Specifically, **the electrons produced by the α-ray are attracted to the substrate body 2S by that concentration gradient and prevented from entering the p-well 6p** so that the soft errors can be reduced in case the MIS memory of the DRAM or the like is formed in the p-well 6p."

Kawagoe, EX1007, 16:2-11

Petition, Paper 2 (-01242), 18-23;
Reply, Paper 62 (-01242), 1-15;
Petition, Paper 2 (-01243), 25-32;
Reply, Paper 61 (-01243), 1-15;
Petition, Paper 2 (-01244), 48-67;
Reply, Paper 61 (-01244), 1-13

BAKER BOTTS DEMONSTRATIVE EXHIBIT – NOT EVIDENCE 14

This is not true. OnSemi's arguments are contrary to the most basic laws of electronics and physics, and Kawagoe itself. Kawagoe never says it moves electrons to the substrate body 2S. Rather Kawagoe says the electrons "are attracted to the substrate body 2S," and they are "prevented from entering the p-well 6p." Dr. Blalock admits that the electrons are produced in the "large substrate body below the wells." This means that whatever Figure 17 is doing, it is keeping the electrons in the substrate, and preventing them from entering the p-well. As I explained in my deposition, Figure 17 does not sweep electrons from the active region down into the substrate, and Kawagoe never explains what happens in the p-well. Ex. 1052, 121:11-17, 122:6-9. To the extent the electric field identified by Petitioner would move electrons at all, it would move them in an upward direction to the active region.

84. OnSemi's Demonstrative 34 (Ex. 2087) also contains errors and misrepresentations.

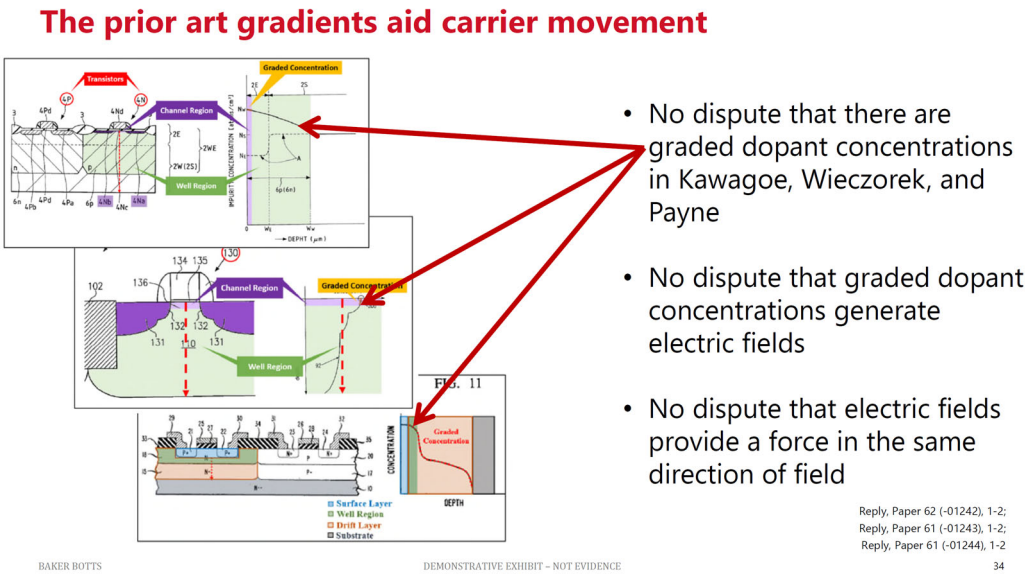

In the top left, OnSemi has added a red-dashed arrow to Figure 23 from Kawagoe. The line should stop near the bottom of the p-well and not continue deeper into the substrate. As explained below, the purported electric field would not cause an electron to move "in the ***same*** direction of field." The electron would move "in the ***opposite*** direction of field."

85. Next, in the middle of Demonstrative 34 (see also Demonstratives 21-22) (Ex. 2087), OnSemi has added a red-dashed arrow to the p-well portion of Fig. 1b from Wieczorek. But, it is impossible to determine from Wieczorek's Fig. 2b whether the gradient of dopant concentration shown in Fig. 2b would even create an electric field, and if so, the relative location of the electric field. In Wieczorek's own words: "Due to the up-diffusion of the dopant atoms during the heat treatment, the initially retrograde profile in the vicinity of the surface of the semiconductor 100, as indicated by reference number 200, may have become substantially uniformly distributed." Wieczorek, [0011]. This means that there may be no gradient nor electric field at the surface of the p-well. To the extent, there is an electric field, there is no evidence that the magnitude of the electric field would be sufficient to aid carrier movement from the active region to the substrate.

86. Next, at the bottom of Demonstrative 34 (see also Demonstratives 24-25) (Ex. 2087), OnSemi has added a red-dashed arrow to the n-well portion of Payne. OnSemi's demonstrative concedes that the dopant concentration in the active region

(or surface layer) portion of the n-well is uniform, and therefore, it does not create an electric field in the active region (or surface layer) portion of the n-well. This confirms that Payne does not aid carrier movement from the surface to the substrate.

87. OnSemi's Demonstrative 35 (Ex. 2087) also contains errors and misrepresentations.

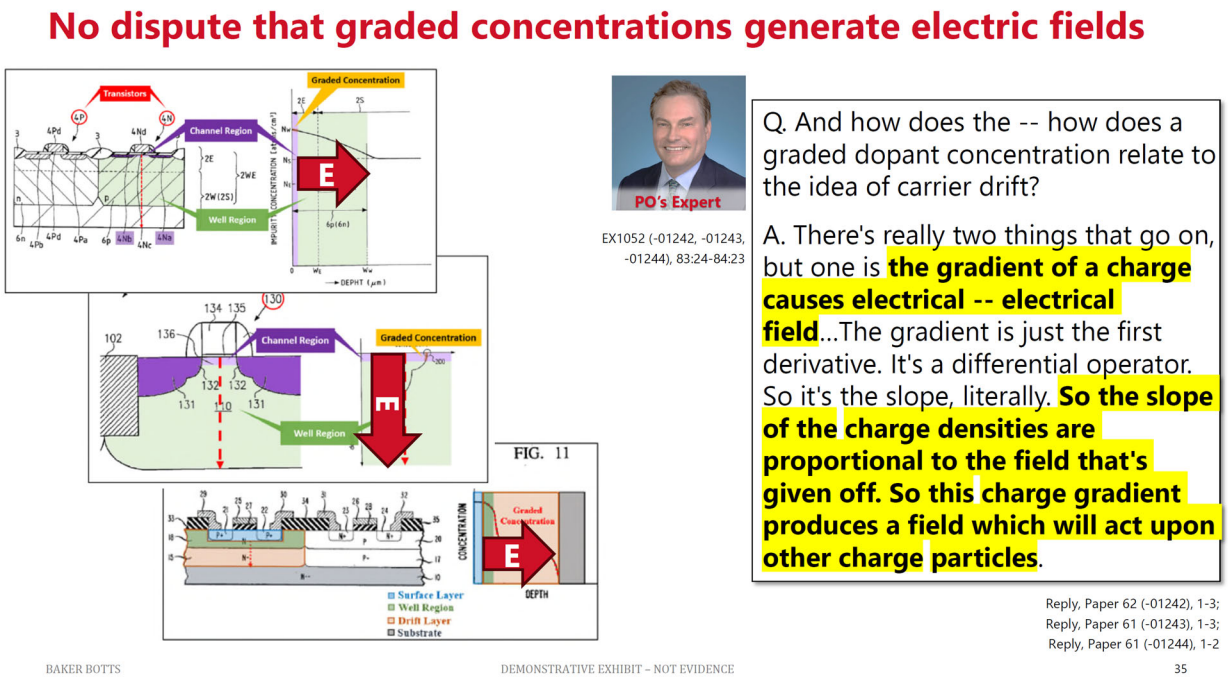

In this demonstrative, Petitioner has taken inconsistent positions. First, Kawagoe expressly says that Figure 17 prevents alpha-ray generated electrons from entering the well. Second, since holes move in the direction of the electric field, and electrons in the opposite direction, this would lead to holes being pushed downwards and electrons being brought upwards. Petitioner's inconsistent positions demonstrates why Kawagoe is an unreliable prior art reference, and the Petition is fundamentally flawed.

88. As noted above, the dopants in Wieczworek's p-well would not necessarily create an electric field. Wieczorek states the dopants may be substantially uniformly distributed. Next, in the middle of Demonstrative 34 (see also Demonstratives 21-22) (Ex. 2087), OnSemi has added a red-dashed arrow to the p-well portion of Fig. 1b from Wieczorek. But, it is impossible to determine from Wieczorek's Fig. 2b whether the gradient of dopant concentration shown in Fig. 2b would even create an electric field, and if so, the relative location of the electric field in Fig. 1b. In Wieczorek's own words: "Due to the up-diffusion of the dopant atoms during the heat treatment, the initially retrograde profile in the vicinity of the surface of the semiconductor 100, as indicated by reference number 200, may have become substantially uniformly distributed." This means that there may be no electric field at the surface of the p-well. To the extent, there is an electric field, there is no evidence that the magnitude of the electric field would be sufficient to aid carrier movement from the active region to the substrate.

89. For Payne, OnSemi concedes that the dopant concentration in the active region (or surface layer) portion of the n-well is uniform, and therefore, it does not create an electric field in the active region (or surface layer) portion of the n-well. As shown in Demonstrative 35 (Ex. 2087), there is no electric field in the surface layer where the active region is located. This confirms that Payne does not aid carrier movement from the surface to the substrate.

90. OnSemi's Demonstrative 36 (Ex. 2087) also contains errors and misrepresentations.

No dispute that electric fields "provide a force … aiding movement in the direction of the force"

EX2058 (-01242, -01243, -01244), 165:17-166:6

Q. And you relied on that logic, […] if slope is downward, then carriers will move; is that basically the logic that you applied? […]

A. No. As I've said, if […] you have a downward-sloping graded dopant concentration, we know from **the basic physics** that that will lead to an electric field and that will create a force, which tends to move the carriers.

EX1052 (-01242, -01243, -01244), 108:15-23

Q. So when you talk about in paragraph 49 a concentration gradient aiding carrier movement or impeding carrier movement, that cannot be agnostic to the direction of the carrier movement, right?

A. Well, a field will provide a force in a direction aiding -- direction -- aiding movement in the direction of the force. **That's just basic physics**.

BAKER BOTTS

DEMONSTRATIVE EXHIBIT – NOT EVIDENCE

Reply, Paper 62 (-01242), 1-2, 8-9; Reply, Paper 61 (-01243), 1-2, 9; Reply, Paper 61 (-01244), 1-2, 8 36

In this slide, OnSemi has taken my testimony out of context to wrongly imply that all electric fields will aid carrier movement. This is not true. Whether an electric field from a graded dopant concentration will aid carrier movement in a particular direction depends on numerous factors. For example, (1) are the dopants n-type or p-type?; (2) are the dopants increasing or decreasing?; (3) is the carrier a hole or an electron?; (4) is the electric field generating a force that is sufficient to overcome the resistance of the semiconductor?; (5) is the force in the same direction or the opposite direction of another force?; and (6) is the force greater than or less than the other force. To take my testimony and wrongly imply that all graded dopant conentrations

will aid carrier movement from the surface to the substrate is very misleading. If, for example, the electric field is pointing from the surface to the substrate, this does not mean that the field will be strong enough to overcome the resistance of the semiconductor. So the electron may not move at all due to the electric field. To the extent the electron does move, the electric field identified by Petitioner is not going to aid the movement of an electron from the surface to the substrate. This electric field would cause the electron to move in the opposite direction to the surface. But ultimately, whether the electron will move will depend on other forces.

91. OnSemi's Demonstrative 37 (Ex. 2087) also contains errors and misrepresentations.

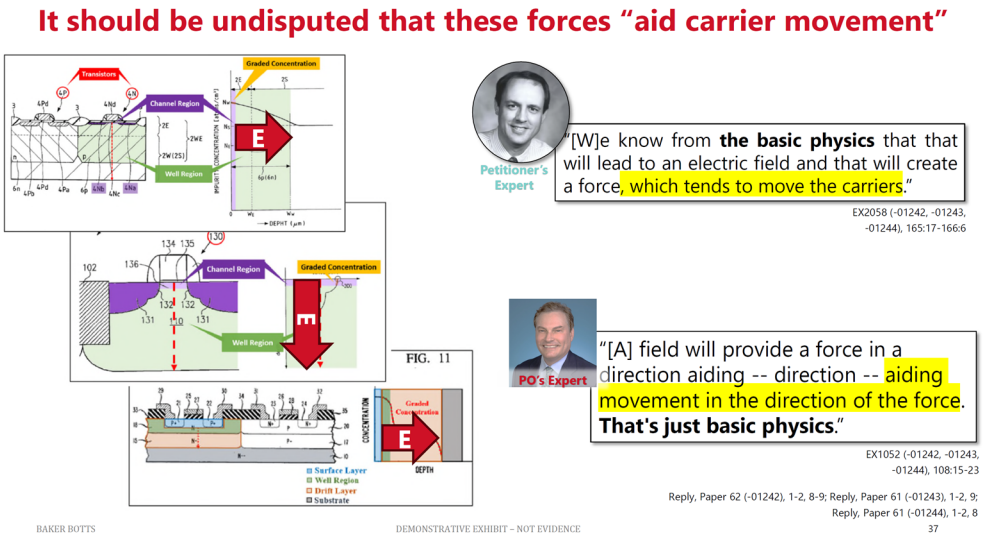

Like the previous slide, OnSemi has taken my testimony out of context to wrongly imply that all electric fields will aid carrier movement. This is not true for the reasons above.

92. OnSemi's Demonstrative 38 (Ex. 2087) also contains errors and misrepresentations.

It should be undisputed that these forces "aid carrier movement"

Kawagoe: "electrons produced by the α-ray are **attracted to the substrate body 2S by that concentration gradient** and prevented from entering the p-well"

Kawagoe, EX1007 (-01242, -01243, -01244), 16:2-11, Figs. 17, 23

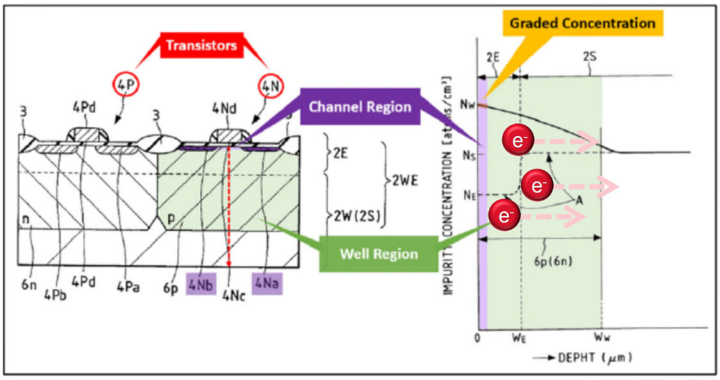

Petition, Paper 2 (-01242), 24-28; POR, Paper 47 (-01242), 16; Reply, Paper 62 (-01242), 7-10; Petition, Paper 2 (-01243), 27-32; POR, Paper 46 (-01243), 16-17; Reply, Paper 61 (-01243), 7-10; Petition, Paper 2 (-01244), 57-67; POR, Paper 46 (-01244), 16-17; Reply, Paper 61 (-01244), 6-9

BAKER BOTTS DEMONSTRATIVE EXHIBIT – NOT EVIDENCE Kawagoe, EX1007 (-01242, -01243, -01244), Figs. 17, 23 38

This demonstrative demonstrates how Petitioner is taking inconsistent positions and why Kawagoe is an unreliable prior reference. As explained above, the only plausible explanation is that Kawagoe's Figure 17 was intended solely to keep the electrons "in the large substrate body below the wells" were they were produced. However, Petitioner has identified an electric field that would move electrons upwards. Dr. Blalock admits in footnote 6 of his declaration that the electrons originate "in the large substrate body below the wells." Ex. 1003, pages 53-54, n.6. In Kawagoe's own words, the electrons are "attracted to the substrate body 2S" by Figure 17, and Figure 17 "prevents" the electrons "from entering the p-well 6p." This does not mean that Figure 17 "moves" electrons from the p-well to deeper in the substrate, and it certainly does not mean that it moves electrons from the active

region portion of the p-well to the substrate portion of the p-well. Rather it simply means that the electrons stay in the substrate below the p-well.

93. Kawagoe never explains what effect, if any, Figure 17 would have on an electron in the p-well. But whatever that effect would be, it would be impossible for Figure 17 to aid carrier movement of the electron from the surface of the p-well to the substrate portion of the p-well. According to Figure 17, the concentration of p-type dopants (Nw) is higher at the surface of the p-well (depth = 0) than the concentration of p-type dopants (Ns) at the bottom of the p-well (depth = Ww). As indicated by the red arrows labeled "E" on Demonstratives 35 and 37 (Ex. 2087), Petitioner has indentified an electric field that would point from the surface of the p-well where the positive charge is the greatest to the bottom of the p-well where the positive charge is the least. OnSemi has drawn the electrons as red circles with "e-," and then drawn pink dashed arrows to wrongly imply that the electric field shown on the previous slides 35 and 37 would cause these electrons to move in the direction of the pink arrows. This is clearly wrong, and it is contrary to the basic laws of electronics and physics. To the extent the electric field causes the electrons to move at all, the electrons would not move in a downward direction, as indicated by the pink arrows. The electrons would move in an upward direction in the opposite direction of the pink arrows. Electrons move in the opposite direction of the electric field.

94. Demonstrative 38 (Ex. 2087) never mentions Wieczorek or Payne, and does not allege what effect if any, the purported electric field would have on a carrier. This is not surprising given that Wieczorek and Payne never mention carriers in the active region, and what effect if any, Wieczorek's Fig. 1b or Payne's Fig. 11 would have them. As discussed above, Wieczorek states the dopant concentration is substantially uniformly distributed at the surface where the active region is located. This means Wieczorek does not aid carrier movement from the active region to the substrate. Similarly, Payne's Fig. 11 shows that the dopant concentration is uniform in the surface layer where the active region is located, and OnSemi admits that there is no electric field in the surface layer. This means Payne does not aid carrier movement from the active region to the substrate.

95. OnSemi's Demonstrative 39 (Ex. 2087) also contains errors and misrepresentations.

Greenthread's flawed arguments about "aid carrier movement"

What Greenthread says:	Why this argument fails:
• "Graded" does not mean "aided"	• *Petitioner has shown that specific gradients in prior art would aid carrier movement*
• Direction of slope insufficient to show "aided"	• *The patents do not disclose any required slope magnitude*
• External hypothetical forces may overcome internal electric field from gradient	• *The prior art does not have such external forces*
• Kawagoe does not address carriers in the active region	• *The same electric field in Kawagoe extends through active region and well*

Reply, Paper 62 (-01242), 1-15;
Reply, Paper 61 (-01243), 1-15;
Reply, Paper 61 (-01244), 1-13

BAKER BOTTS DEMONSTRATIVE EXHIBIT – NOT EVIDENCE 39

OnSemi has not shown that specific gradients would aid carrier movement from the surface to the substrate. As explained above, the purported electric field in Kawagoe would not move electrons from the surface of the p-well to the substrate portion of the p-well. To the extent the electric field moves the electrons at all, it would move them in the opposite direction to the surface of the p-well. According to Wieczorek, there is no electric field from a dopant gradient at the surface of the p-well. Therefore, Wieczorek does not aid carrier movement from the surface to the substrate. Similarly, in Payne, there is no electric field from a dopant gradient at the surface of the p-well. Therefore, Payne does not aid carrier movement from the surface to the substrate.

96. I disagree with OnSemi's assertion that the patents do not disclose any required slope magnitude. The patents do disclose a required slope magnitude, and the prosecution history confirms this. More specifically, the patents disclose that the relative slope must be large enough to create a "suitable drift electric field." '014 Patent, 2:65-3:9. As illustrated in Fig. 5B and disclosed later in the specification, the relative slope must be large enough "to pull minority carriers from the surface," and "sweep these unwanted carriers from the active circuitry at the surface into the substrate." '014 Patent, Fig. 5B, 3:64-4:11.

97. I disagree with OnSemi's assertion that external forces are "hypothetical," and that prior art does not have any external forces. In all of the

prior art references, there will be external forces. For example, as I described in paragraphs 36 and 37 of my declaration, there will be a force due to a voltage applied to a gate of the transistor. In the example, in my declaration, the voltage applied to the gate will create an electric field that points in a downward direction. Similarly, the graded dopant region in Fig. 5B will create an electric field that points in the downward direction. In this example, the electric field created by the graded dopant region may aid carrier movement of holes from the surface to the substrate because they point in the same downward direction. If, however, the electric field pointed in the upward direction, the electric field would not aid carrier movement of holes from the surface to the substrate, and the question of whether the holes moved at all would depend on the net effect of the two fields.

98. I disagree with OnSemi's assertion that Kawagoe does address carriers in the active region. As I explained above, the only plausible reading of Kawagoe is that whatever Fig. 17 is doing, it is keeping the electrons in the "large substrate body below the wells," where the electrons are produced. Kawagoe never mentions an electron in the p-well, and what effect if any, the dopant concentration in Figure 17. OnSemi alleges, however, that the dopant concentration would create an electric field that points in the downward direction. It is a basic law of electronics and physics that an electron moves in the opposite direction of the electric field. This means that to the extent the electric field moves an electron in the p-well, it would

move the electron in an upward direction to the surface. Thus, the electric field does not aid carrier movement from the surface of the p-well to the substrate potion of the p-well, as OnSemi alleges.

99. OnSemi's Demonstrative 49 (Ex. 2087) also contains errors and misrepresentations.

PO represented that "particular direction" of gradient determines carrier movement

Greenthread, LLC
Plaintiff,
v.
Intel Corporation;
Dell Inc.; and
Dell Technologies Inc.
Defendants.

Civil Action No. 6:22-cv-105-ADA

JURY TRIAL DEMANDED

GREENTHREAD'S RESPONSIVE CLAIM CONSTRUCTION BRIEF

"These dopants can also change the net electrical charge distribution in the surrounding silicon, which can influence the motion of other charge carriers passing by. When the dopant concentration is graded **in a particular direction,** other charge carriers will move in the gradient direction (or opposite direction) depending on the charge carrier's polarity. This phenomenon is called 'carrier drift.'"

EX1020 (-01242, -01243), native p. 2, exhibit p. 11

Reply, Paper 62 (-01242), 3-4;
Reply, Paper 61 (-01243), 3-4

BAKER BOTTS DEMONSTRATIVE EXHIBIT – NOT EVIDENCE 49

Demonstrative 49 (Ex. 2087) misrepresents Greenthread's claim construction brief. Greenthread never said that all graded carrier concentrations will aid carrier movement. Greenthread was explaining what happens when the electric field is strong enough to cause "carrier drift," and the carriers do move. As I explained in paragraphs 36 and 37, when an electric field from the gate voltage and the electric field from the graded dopant concentration point in the same downward direction, the electric field from the graded dopant concentration may aid carrier movement. But if the two fields point in opposite directions, the question of whether the carrier

moves, and if so, what direction it moves will depend on the net effect of the two fields. Greenthread's brief confirms the basic law of electronics and physics that if an electric field moves a carrier, the direction of movement will depend on the carrier's polarity. If the carrier is a positively charged hole, the hole will move in the same direction as the electric field. If the carrier is a negatively charged electron, the electron will move in the opposite direction of the electric field.

100. OnSemi's Demonstrative 50 (Ex. 2087) also contains errors and misrepresentations.

PO represented that magnitude is irrelevant

Greenthread, LLC
Plaintiff,
v.
Intel Corporation;
Dell Inc.; and
Dell Technologies Inc.
Defendants.

Civil Action No. 6:22-cv-105-ADA

JURY TRIAL DEMANDED

GREENTHREAD'S RESPONSIVE CLAIM CONSTRUCTION BRIEF

"The claim specifies the graded dopants create an electric field that aids movement of the carriers away from the surface layer. Defendants assert that the specification does not provide guidance on how to assess or measure carrier movement. This is not true. The claims and the specification make clear that **the electric field must move the carriers in a particular direction** (from the surface layer to the substrate). **Whether the carrier movement has a particular speed or acceleration is beyond the scope of the claim, as long as it meets the other limitations of the claim**."

EX1020 (-01242, -01243), native p. 29, exhibit p. 38

Reply, Paper 62 (-01242), 3;
Reply, Paper 61 (-01243), 3

BAKER BOTTS DEMONSTRATIVE EXHIBIT – NOT EVIDENCE 50

OnSemi is misrepresenting Greenthread's claim construction brief. OnSemi is misrepresenting the highlighted portions to argue that Greenthread said the relative slope of the dopant concentration, and the force of the electric field created by the relative slope of the dopant concentration, do not matter. This is not true. As explained above, the patent discloses that the relative slope must be large enough to

create a "suitable drift electric field." '014 Patent, 2:66-3:8. As illustrated in Fig. 5B and disclosed later in the specification, the relative slope must be large enough "to pull minority carriers from the surface," and "sweep these unwanted carriers from the active circuitry at the surface into the substrate." '014 Patent, Fig. 5B, 3:64-4:11. Greenthread's claim construction brief never said that the magnitude is irrelevant. In fact, Greenthread said the opposite. Greenthread said "the electric field must move the carriers in a particular direction." This means that the magnitude is relevant. Assuming the magnitude of the electric field is large enough to move the carriers in a particular direction, the additional details such as the "particular speed or acceleration" of the carrier movement is beyond the scope of the claim. But the fact that the "particular speed or acceleration" of the carrier movement in the correct direction does not mean that the magnitude is not relevant.

101. OnSemi's Demonstrative 52 (Ex. 2087) also contains numerous errors and misrepresentations.

Dr. Blalock explained that the prior art does not disclose hypothetical opposing forces

Q. So you mentioned that if there aren't other fields present and the carrier was introduced into that field, you'll move the carrier. Where could other fields come from?

A. Externally applied voltages from the circuit, if the structure's in a circuit, things like that. Or I suppose some environmental effect. I don't know.

Q. Is anything like that described in the prior art reference that you are relying on, Kawagoe?

A. As I said, **none of that is** -- all these discussions are about we built this device and we put in a gradient to create this electric field, which tends to move carriers down into the substrate. And we don't need to get into the rest of it. [...]

Reply, Paper 62 (-01242), 8, 10-12; Reply, Paper 61 (-01243), 8, 10-12; Reply, Paper 61 (-01244), 7, 9-11

EX2058, 132:6–22

BAKER BOTTS

DEMONSTRATIVE EXHIBIT – NOT EVIDENCE

52

OnSemi is misrepresenting Dr. Blalock's testimony to wrongly argue that opposing forces are "hypothetical" and that they do not exist in the prior art. This is not true. I and others have identified other forces such as resistance of silicon. EX2083 (Deposition transcript of Cirrus Logic's corporate representative, Mr. Warrick) at 72:6-22, 95:2-5; 96:1-13 (PDF pages 15 and 20-21); EX2085 (Deposition transcript of MPS's expert, Dr. Campbell), 33:14-33:19; 39:8-12.

102. OnSemi's Demonstrative 57 (Ex. 2087) also contains errors and misrepresentations.

Carriers are present throughout Kawagoe's device

Q. Okay. Electrons from a variety of sources would be found throughout the Kawagoe device, right?

A. There are other electrons generated from other things, yes.

EX1052 (-01242, -01243, -01244), 118:9-13

Q. For the device shown in Figure 17 of Kawagoe, along the depth 0 to WW, is there any region where there would not be electrons?

A. This is a p-well, so it is substantially holes. There are electrons as minority species.

EX1052 (-01242, -01243, -01244), 120:11-17

Reply, Paper 62 (-01242), 12-13;
Reply, Paper 61 (-01243), 12-13;
Reply, Paper 61 (-01244), 11-12

BAKER BOTTS DEMONSTRATIVE EXHIBIT – NOT EVIDENCE 57

OnSemi is misrepresenting my testimony. The fact that there may be electrons in the p-well does not mean those electrons will move from the surface of the p-well to the substrate portion of the p-well. As explained above, the only plausible explanation is that Kawagoe's Figure 17 was intended solely to keep the electrons "in the large substrate body below the wells" were they were produced. Dr. Blalock admits that the electrons originate "in the large substrate body below the wells." Ex. 1003, pages 53-54, n.6. In Kawagoe's own words, the electrons are "attracted to the substrate body 2S" by Figure 17, and Figure 17 "prevents" the electrons "from entering the p-well 6p." This does not mean that Figure 17 "moves" electrons from the p-well to deeper in the substrate, and it certainly does not mean that it moves electrons from the active region portion of the p-well to the substrate portion of the p-well. Rather it simply means that the electrons stay in the substrate below the p-well. Kawagoe never explains what effect, if any, Figure 17 would have on an

electron in the p-well. But whatever that effect would be, it would be impossible for the electric field shown in Demonstrative 38 (Ex. 2087) to aid carrier movement of the electron from the surface of the p-well to the substrate portion of the p-well. To the extent the electric field causes the electrons to move at all, the electrons would move in an upward direction to the surface.

103. OnSemi's Demonstrative 58 (Ex. 2087) also contains errors and misrepresentations.

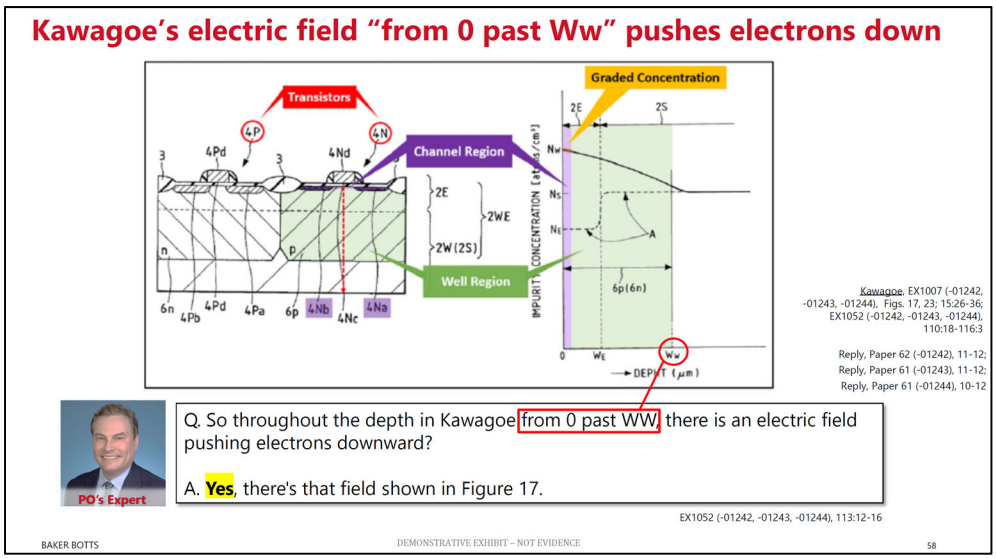

OnSemi is misrepresenting my testimony. I never testified that Figure 17 would create an electric field that would act on an electron ***in the p-well*** to aid carrier movement from the surface of the p-well to the substrate portion of the p-well. As I explained later in my deposition, the electric field created by Figure 17 would not sweep electrons from the active region down into the substrate. Ex. 1052, 121:11-17. As I explained shortly thereafter, "the patent only describes that this dopant

gradient is able to keep SEU electrons out of the well. It doesn't tell you what's happening in the well." Ex. 1052, 122:6-9. To the extent the electric field shown in Demonstrative 38 (Ex. 2087) "sweeps" electrons at all, it certainly would not "sweep" them from the active region down into the substrate. It would "sweep" them in the ***opposite*** direction ***to*** the active region. This is why the only plausible reading of Kawagoe is that whatever Figure 17 is doing, Figure 17 is keeping the electrons "in the large substrate body below the wells" were they were produced. On page 113 of my deposition transcript, I was not describing what might happen to an electron in the p-well. Rather I was trying to explain that whatever Figure 17 is doing, the cumulative effect of the field from 0 past Ww presumably does what Kawagoe says it does, and keeps the electrons in the substrate below the p-well, where they are produced.

104. OnSemi's Demonstrative 59 (Ex. 2087) also contains errors and misrepresentations.

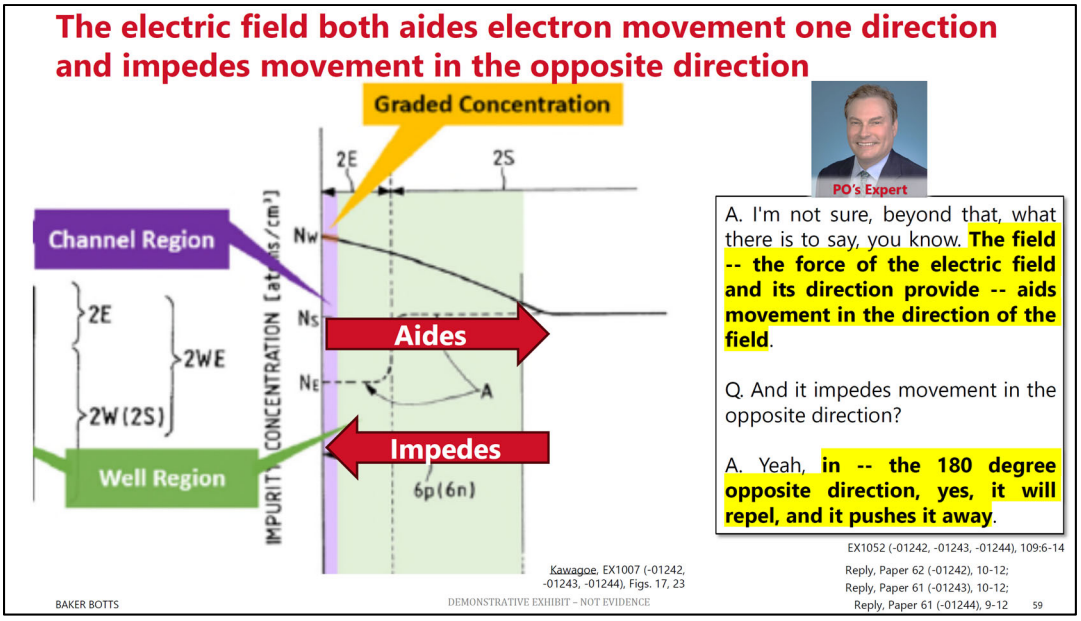

Demonstrative 59 (Ex. 2087) is very misleading for several reasons. First, Demonstrative 59 (Ex. 2087) presumes that the magnitude of the electric field is large enough to overcome the resistance of the semiconductor and other external forces. Second, Demonstrative 59 (Ex. 2087) does not account for the polarity of the carrier. OnSemi has drawn an electric field pointing in the downward direction, and then wrongly implies that it will aid carrier movement in the same direction as the electric field. This ignores one of the most basic laws of electronics and physics. An electron does not move in the same direction of the electric field. So if the electric field is pointing in the downward direction, it is not going to aid movement of an electron from the surface of the p-well to the substrate portion of the p-well. To the extent the electric field moves the electron at all, the electron will move in the opposite direction of the electric field in an upward direction. Third,

Demonstrative 59 (Ex. 2087) does not account for other forces. For example, if the gate of the transistor creates an electric field pointing in an upward direction. The electric field pointing in the downward direction will no longer aid carrier movement in the correct direction. The two fields will act on the same carrier in opposite directions, and the question of whether the carrier will move, and if so, move in the correct direction will depend on the net effect of the two fields.

105. OnSemi's Demonstrative 60 (Ex. 2087) also contains errors and misrepresentations.

Nishizawa disproves PO's argument about whether alpha ray strikes create electrons in the active region

EX1052 (-01242, -01243, -01244), 125:5-19

Q. Okay. So would you agree with me that the n+ regions 12 and 13 in Figure 35 correspond to an active region?

[...] A. I would say, generally, these look to be part of an active region, yes.

Q. And if you look at column 19, line 41, 42, this is just after the discussion you cited in your report, right?

A. Same column, same paragraph, I think, yes.

Q. And there's a sentence at line 41 that says, "In other words, **several ten thousand electrons will flow into the n+ type region 13**"[?]

A. Yes.

Reply, Paper 62 (-01242), 13-14;
Reply, Paper 61 (-01243), 13-14;
Reply, Paper 61 (-01244), 12-13

Nishizawa, EX2060 (-01242, -01243, -01244), 19:41-42, Figs. 34-36;
EX1052 (-01242, -01243, -01244), 123:17-128:11

BAKER BOTTS DEMONSTRATIVE EXHIBIT – NOT EVIDENCE 60

In Kawagoe's own words, the electrons are "attracted to the substrate body 2S" by Figure 17, and Figure 17 "prevents" the electrons "from entering the p-well 6p." This means that the electrons stay in the substrate below the p-well. Nishizawa shows that electrons in the active region are inconsequential, and Kawagoe never explains what effect, if any, Figure 17 would have on an electron in the p-well. But whatever that effect would be, it would be impossible for the electric field shown in

Demonstrative 38 (Ex. 2087) to aid carrier movement of the electron from the surface of the p-well to the substrate portion of the p-well. To the extent the electric field causes the electrons to move at all, the electrons would move in an upward direction to the surface.

106. OnSemi's Demonstrative 61 (Ex. 2087) also contains errors and misrepresentations.

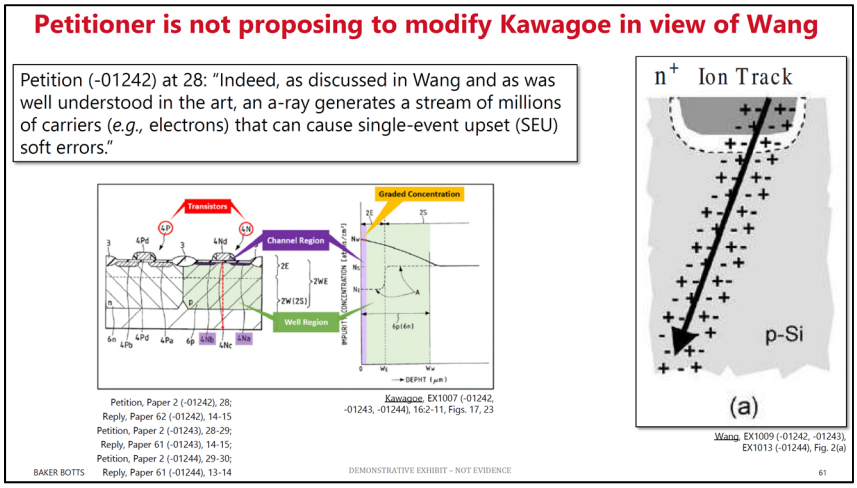

Wang is not prior art, and it merely confirms that the problem of alpha rays is one of carriers generated in the substrate.

X. CONCLUSION

107. I declare that all statements made herein of my knowledge are true, and that all statements made on information and belief are believed to be true, and that these statements were made with the knowledge that willful false statements and the like so made are punishable by fine, imprisonment, or both, under Section 1001 of Title 18 of the United States Code.

Respectfully submitted,

Date: November 21, 2024 By: Alexander D. Glew

Alexander D. Glew