US 20030042511A1

(19) United States

(12) Patent Application Publication

(10) Pub. No.: US 2003/0042511 A1

(43) Pub. Date: Mar. 6, 2003

Rhodes

(54) CMOS IMAGER AND METHOD OF FORMATION

(76) Inventor: **Howard E. Rhodes**, Boise, ID (US)

Correspondence Address:
DICKSTEIN SHAPIRO MORIN & OSHINSKY LLP
2101 L STREET NW
WASHINGTON, DC 20037-1526 (US)

(21) Appl. No.: 09/941,546

(22) Filed: Aug. 30, 2001

Publication Classification

(51) Int. Cl.[7] H01L 27/148

(52) U.S. Cl. 257/232

(57) ABSTRACT

A CMOS imager having multiple graded doped regions formed below respective pixel sensor cells is disclosed. A deep retrograde p-well is formed under a red pixel sensor cell of a semiconductor substrate to increase the red response. A shallow p-well is formed under the blue pixel sensor cell to decrease the red and green responses, while a shallow retrograde p-well is formed below the green pixel sensor cell to increase the green response and decrease the red response.

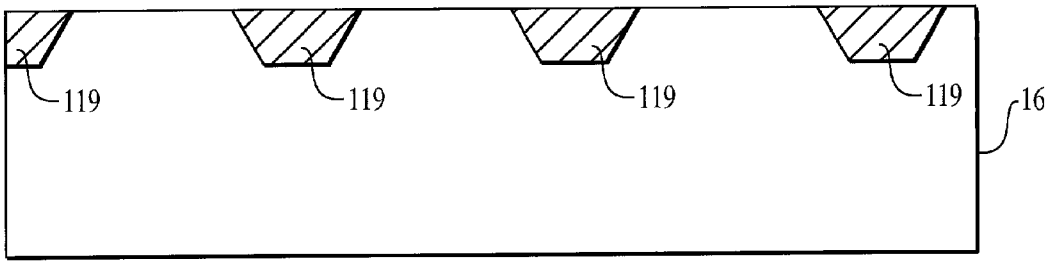

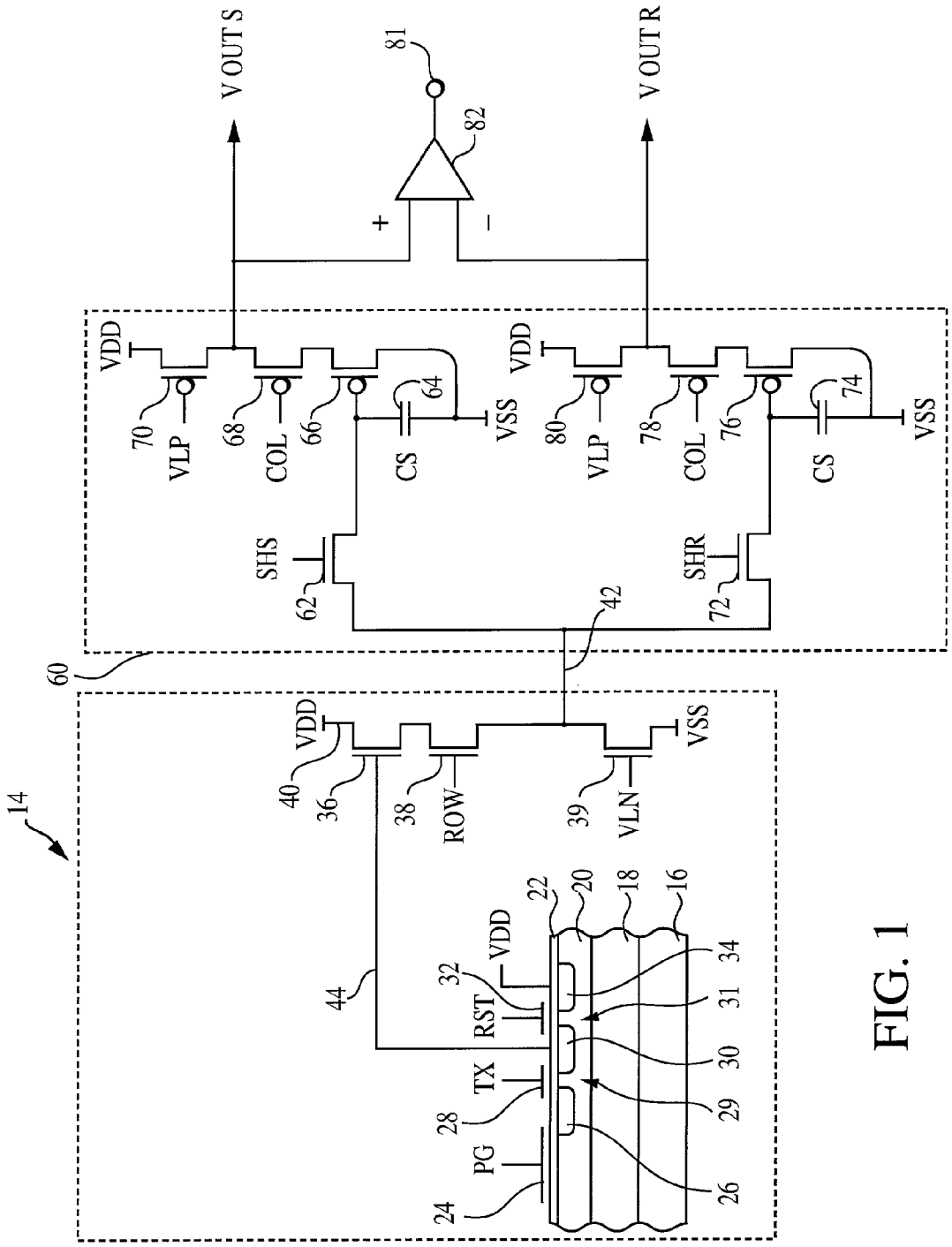
V OUT S
V OUT R
81
82
+
−
VDD
VLP
COL
CS
VSS
SHS
SHR
60
14
ROW
VLN
RST
TX
PG
16
18
20
22
24
26
28
29
30
31
32
34
36
38
39
40
42
44
62
64
66
68
70
72
74
76
78
80

FIG. 1

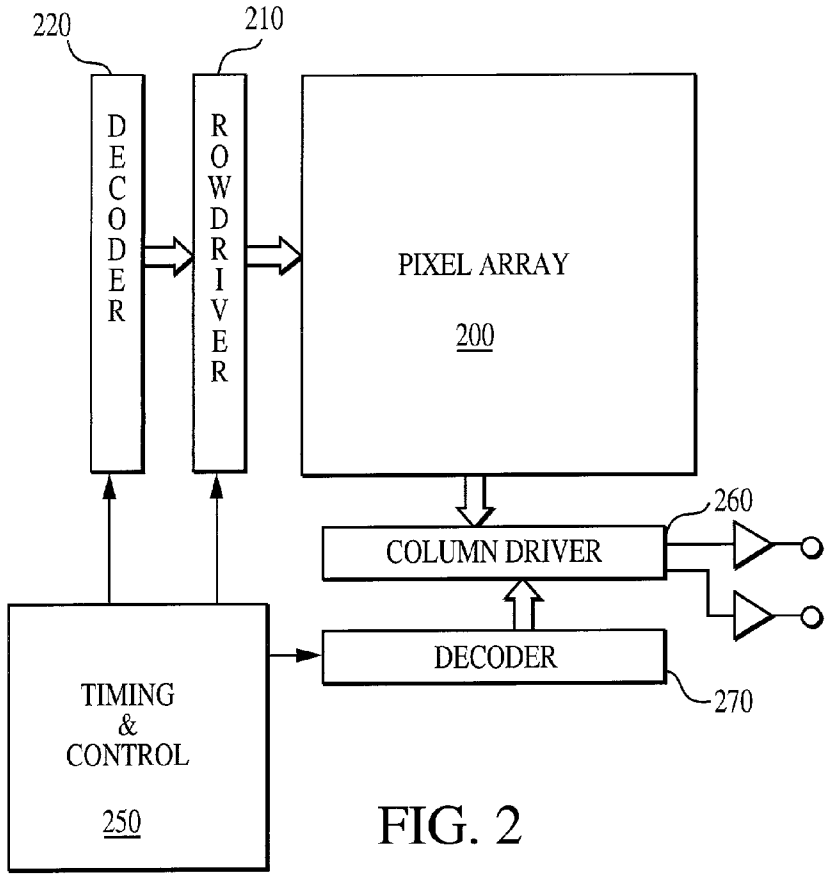
220
210
DECODER
ROWDRIVER
PIXEL ARRAY
200
260
COLUMN DRIVER
DECODER
270
TIMING
&
CONTROL
250

FIG. 2

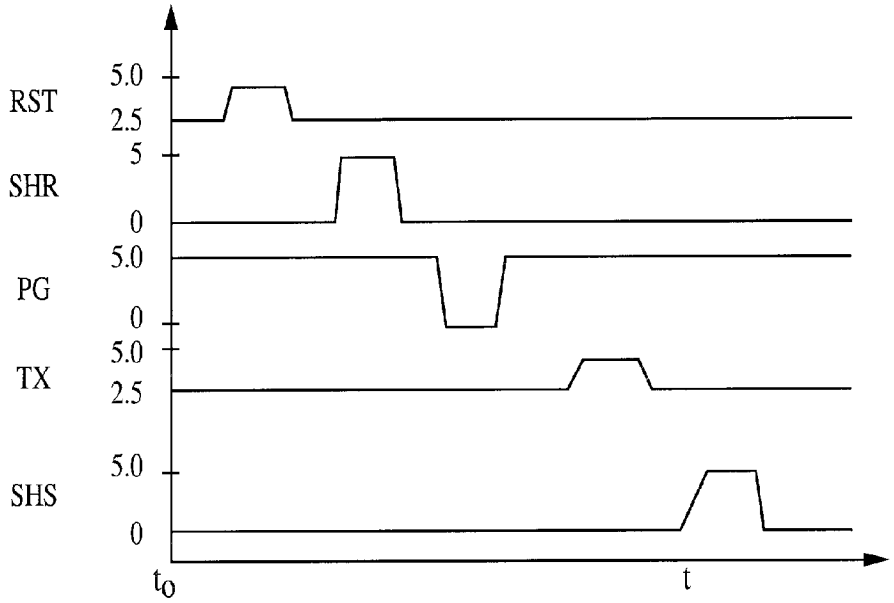
RST
5.0
2.5
SHR
5
0
PG
5.0
0
TX
5.0
2.5
SHS
5.0
0
t_0
t

FIG. 3

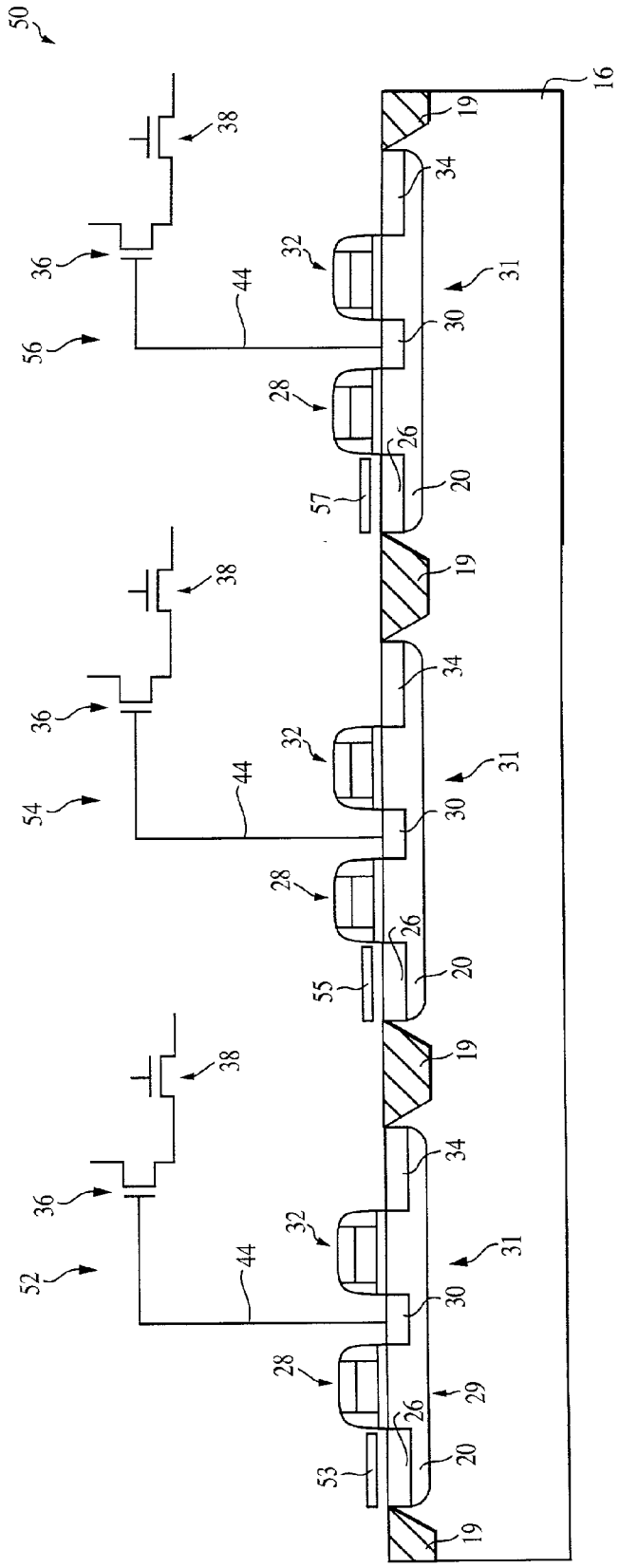
50
16
19
34
38
36
32
31
44
30
56
28
26
20
57
19
38
34
36
32
31
44
30
54
28
26
20
55
19
38
34
36
32
31
44
30
52
28
29
26
20
53
19

FIG. 4

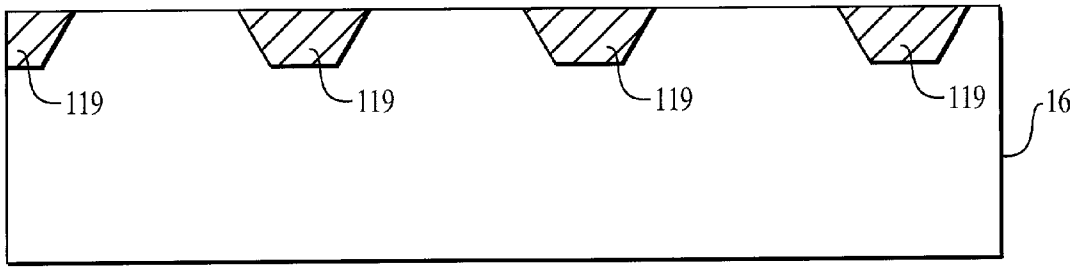

FIG. 5

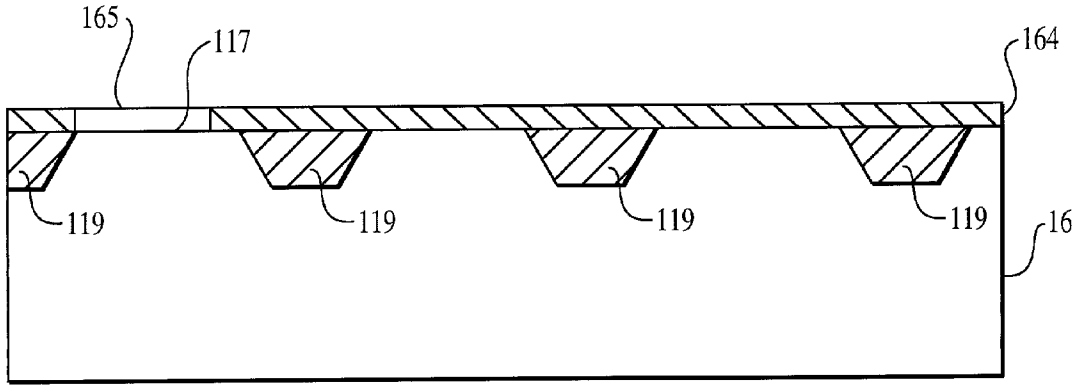

FIG. 6

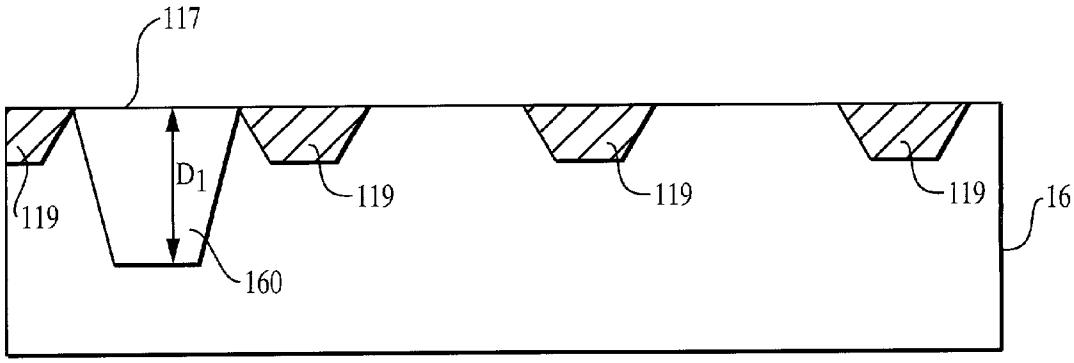

FIG. 7

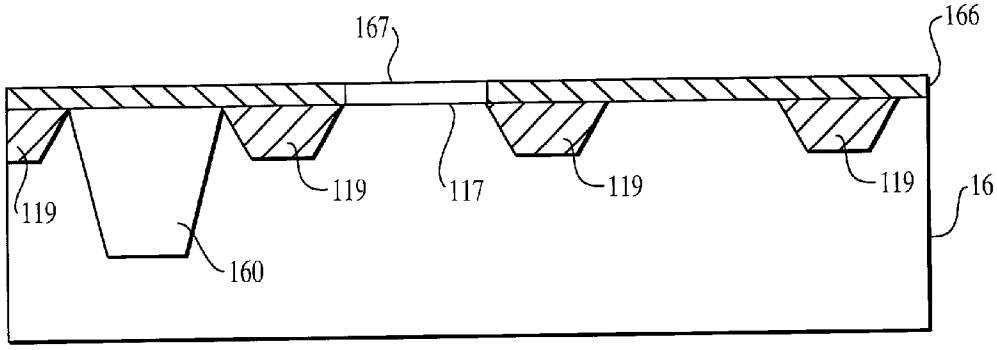

FIG. 8

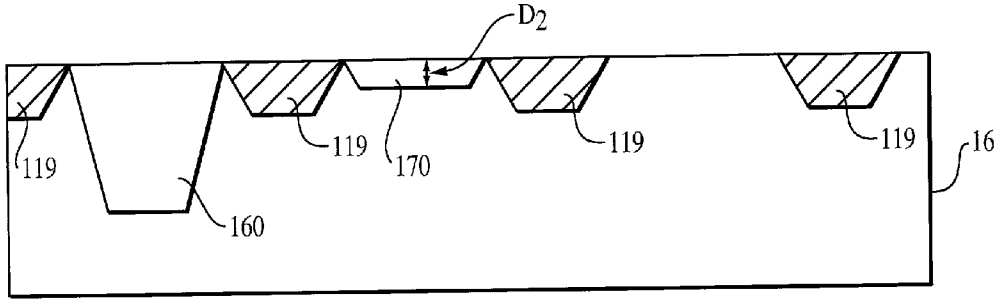

FIG. 9

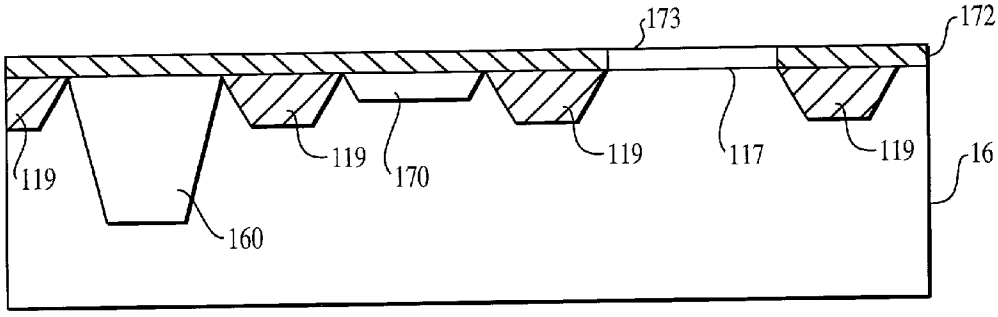

FIG. 10

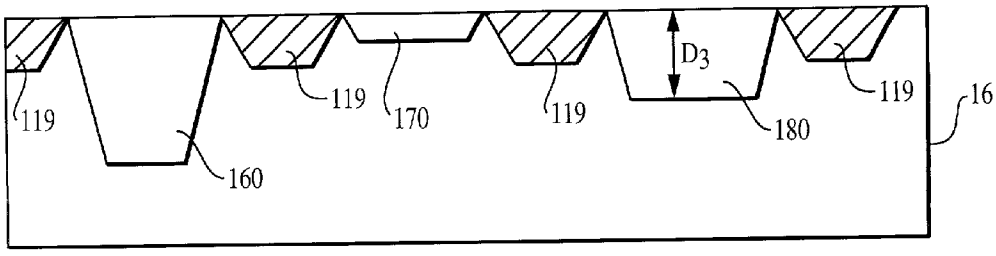

FIG. 11

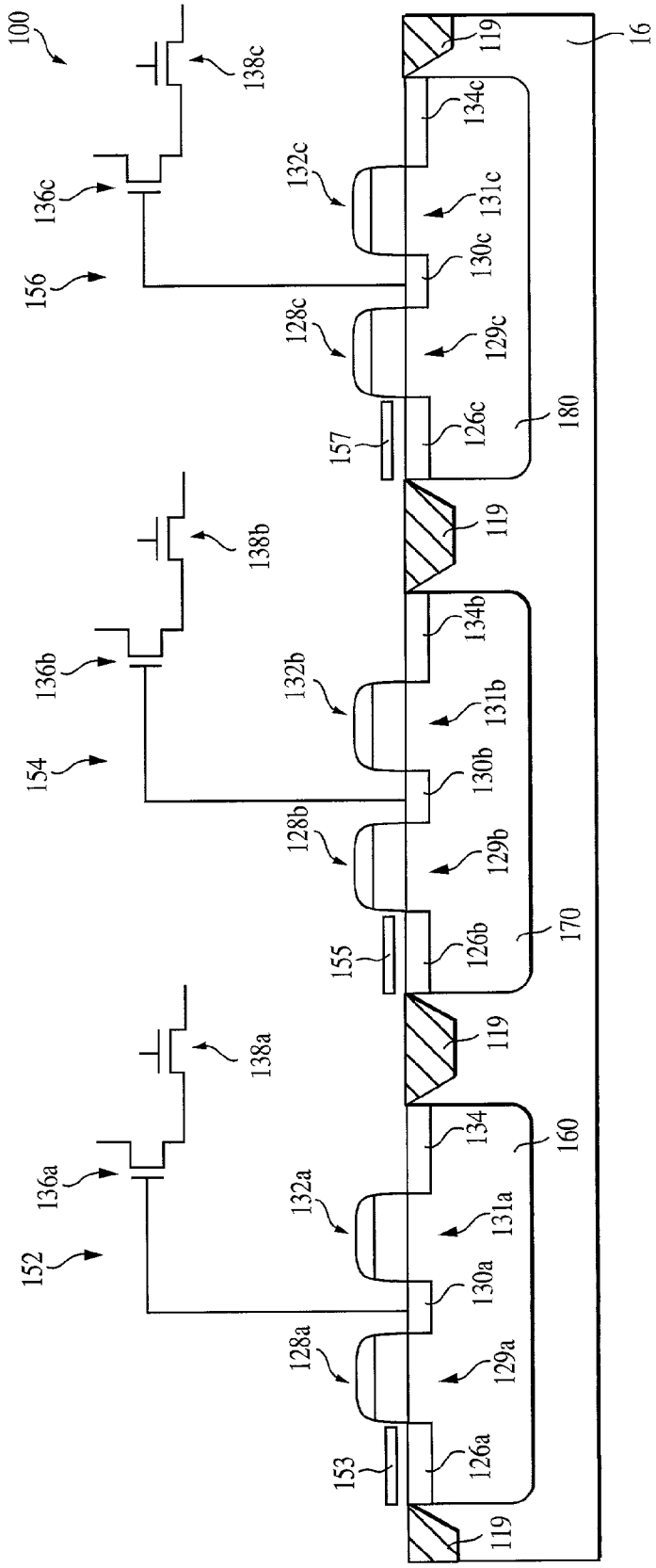
100
138c
136c
156
138b
136b
154
138a
136a
152
119
16
134c
132c
131c
130c
128c
129c
126c
180
157
119
134b
132b
131b
130b
128b
129b
126b
170
155
119
134
160
132a
131a
130a
128a
129a
126a
153
119

FIG. 12

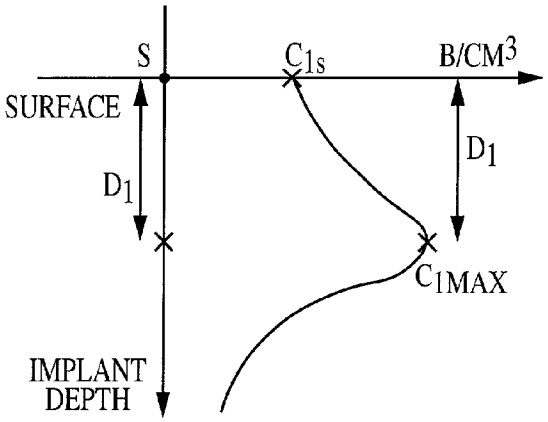

FIG. 13a

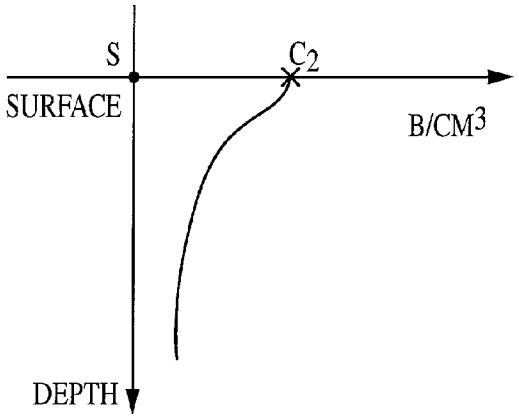

FIG. 13b

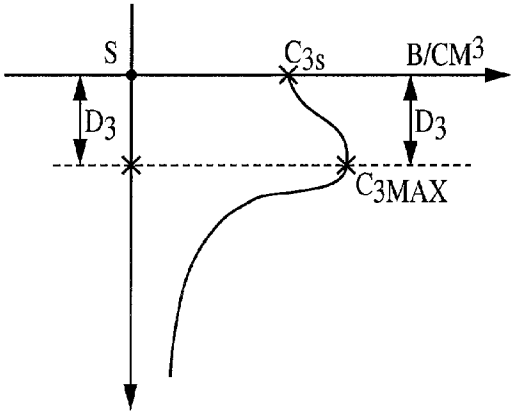

FIG. 13c

FIG. 14

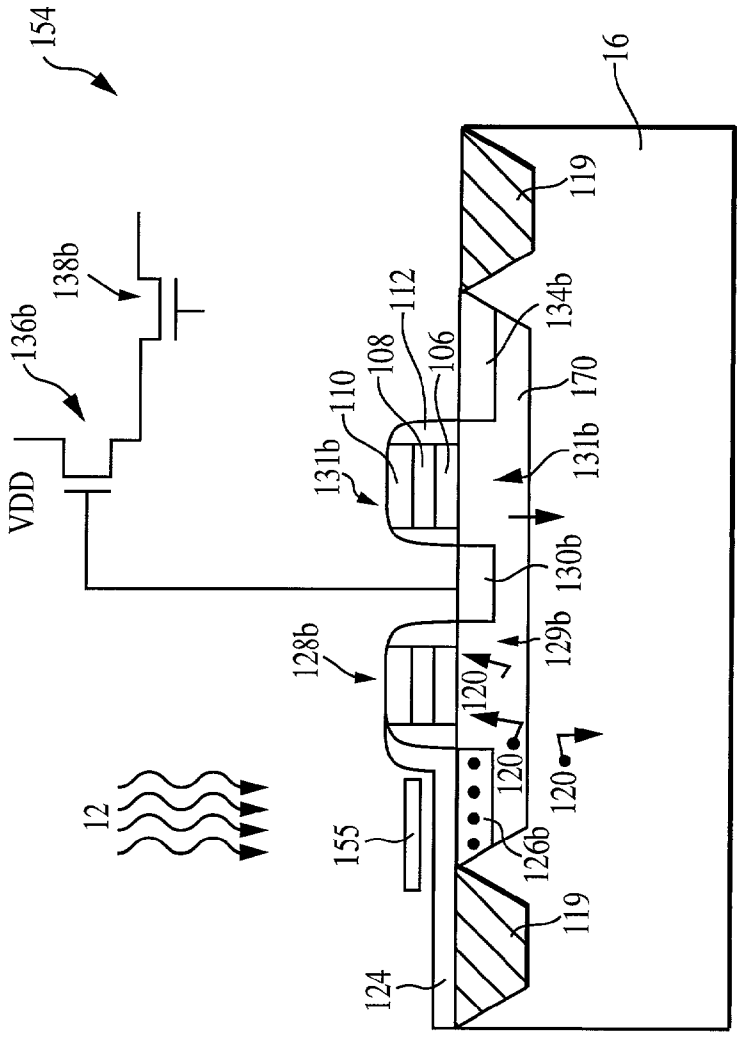
154
16
119
138b
136b
112
134b
108
106
110
170
131b
131b
VDD
130b
128b
129b
120
120
120
12
155
126b
119
124

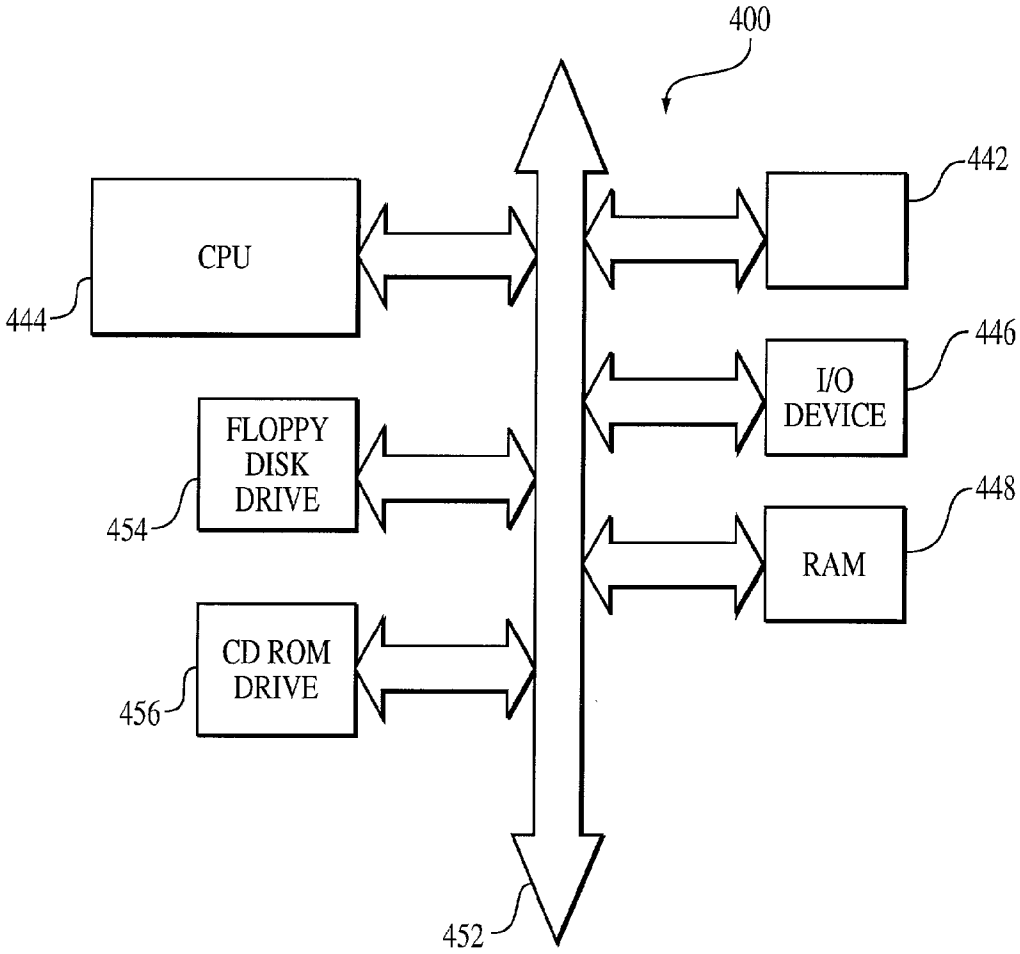
400
CPU
444
FLOPPY DISK DRIVE
454
CD ROM DRIVE
456
452
442
I/O DEVICE
446
RAM
448

FIG. 15

CMOS IMAGER AND METHOD OF FORMATION

FIELD OF THE INVENTION

[0001] The present invention relates to improved semiconductor imaging devices and, in particular, to CMOS imagers with improved color separation and sensitivity.

BACKGROUND OF THE INVENTION

[0002] The semiconductor industry currently uses different types of semiconductor-based imagers, such as charge coupled devices (CCDs), photodiode arrays, charge injection devices and hybrid focal plane arrays, among others.

[0003] CCD technology is often used for image acquisition and has a number of advantages which makes it the preferred technology, particularly for small size imaging applications. CCDs are capable of large formats with small pixel size and they employ low noise charge domain processing techniques. CCD imagers suffer, however, from a number of disadvantages. For example, they are susceptible to radiation damage, they exhibit destructive read-out over time, they require good light shielding to avoid image smear and they have a high power dissipation for large arrays. In addition, while offering high performance, CCD arrays are difficult to integrate with CMOS processing in part due to a different processing technology and to their high capacitances, complicating the integration of on-chip drive and signal processing electronics with the CCD array. Further, CCDs may suffer from incomplete charge transfer from pixel to pixel which results in image smear.

[0004] Because of the inherent limitations in CCD technology, CMOS imagers have been increasingly used as low cost imaging devices. A filly compatible CMOS sensor technology enabling a higher level of integration of an image array with associated processing circuits would be beneficial to many digital applications such as, for example, in cameras, scanners, machine vision systems, vehicle navigation systems, video telephones, computer input devices, surveillance systems, auto focus systems, star trackers, motion detection systems, image stabilization systems and data compression systems for high-definition television.

[0005] CMOS imagers have several advantages over CCD imagers, such as, for example, low voltage operation and low power consumption, compatibility with integrated on-chip electronics (control logic and timing, image processing, and signal conditioning such as A/D conversion), random access to the image data, and lower fabrication costs. Additionally, low power consumption is achieved for CMOS imagers because only one row of pixels at a time needs to be active during the readout and there is no charge transfer (and associated switching) from pixel to pixel during image acquisition. On-chip integration of electronics is particularly advantageous because of the potential to perform many signal conditioning functions in the digital domain (versus analog signal processing) as well as to achieve a reduction in system size and cost.

[0006] A CMOS imager circuit includes a focal plane array of pixel cells, each one of the cells including either a photogate, photoconductor or a photodiode overlying a doped region of a substrate for accumulating photo-generated charge in the underlying portion of the substrate. A readout circuit is connected to each pixel cell and includes at least an output field effect transistor formed in the substrate and a charge transfer section formed on the substrate adjacent the photogate, photoconductor or photodiode having a sensing node, typically a floating diffusion node, connected to the gate of an output transistor. The imager may include at least one electronic device such as a transistor for transferring charge from the charge accumulation region of the substrate to the floating diffusion node and one device, also typically a transistor, for resetting the node to a predetermined charge level prior to charge transference.

[0007] In a CMOS imager, the active elements of a pixel cell perform the necessary functions of: (1) photon to charge conversion; (2) accumulation of image charge; (3) transfer of charge to the floating diffusion node accompanied by charge amplification; (4) resetting the floating diffusion node to a known state before the transfer of charge to it; (5) selection of a pixel for readout; and (6) output and amplification of a signal representing pixel charge. Photo charge may be amplified when it moves from the initial charge accumulation region to the floating diffusion node. The charge at the floating diffusion node is typically converted to a pixel output voltage by a source follower output transistor. The photosensitive element of a CMOS imager pixel is typically either a depleted p-n junction photodiode or a field induced depletion region beneath a photogate. For photodiodes, image lag can be eliminated by completely depleting the photodiode upon readout.

[0008] A schematic view of an exemplary CMOS imaging circuit is illustrated in **FIG. 1**. As it will be described below, the CMOS imaging circuit includes a photogate for accumulating photo-generated charge in an underlying portion of the substrate. It should be understood, however, that the CMOS imager may include a photodiode or other image to charge converting device, in lieu of a photogate, as the initial accumulator for photo-generated charge.

[0009] **FIG. 1** shows a simplified photodetector circuit for a pixel cell **14** of an exemplary CMOS imager using a photogate and and a readout circuit **60**. It should be understood that while **FIG. 1** shows the circuitry for operation of a single pixel, in practical use there will be an M×N array of pixels arranged in rows and columns with the pixels of the array accessed using row and column select circuitry, as described in more detail below.

[0010] The pixel cell **14** is shown in part as a cross-sectional view of a semiconductor substrate **16**, which is typically a p-type silicon, having a surface well of p-type material **20**. An optional layer **18** of p-type material may be used, if desired. Substrate **16** may be formed of Si, SiGe, Ge, or GaAs, among others. Typically, the entire semiconductor substrate **16** is a p-type doped silicon substrate including a surface p-well **20** (with layer **18** omitted), but many other options are possible, such as, for example p on p− substrates, p on p+ substrates, p-wells in n-type substrates or the like.

[0011] An insulating layer **22** of silicon dioxide, for example, is formed on the upper surface of p-well **20**. The p-type layer may be a p-well formed in substrate **16**. A photogate **24**, thin enough to pass radiant energy or of a material which passes radiant energy, is formed on the insulating layer **22**. The photogate **24** receives an applied control signal PG which causes the initial accumulation of pixel charges in n+ region **26**. An n+ type region **26**, adjacent to one side of the photogate **24**, is formed in the upper

surface of p-well **20**. A transfer gate **28** is formed on insulating layer **22** between the n+ type region **26** and a second n+ type region **30** formed in p-well **20**. The n+regions **26** and **30** and transfer gate **28** form a charge transfer transistor **29** which is controlled by a transfer signal TX. The n+ region **30** is typically called a floating diffusion region. The n+ region **30** is also a node for passing charge accumulated thereat to the gate of a source follower transistor **36** described below.

[**0012**] A reset gate **32** is also formed on insulating layer **22** adjacent and between the n+ type region **30** and another n+ region **34** which is also formed in p-well **20**. The reset gate **32** and n+ regions **30** and **34** form a reset transistor **31** which is controlled by a reset signal RST. The n+ type region **34** is coupled to voltage source V_{DD}, of for example, 5 volts. The transfer and reset transistors **29**,**31** are n-channel transistors as described in this implementation of a CMOS imager circuit in a p-well. As known in the art, it is also possible to implement a CMOS imager in an n-well, in which case each of the transistors would be p-channel transistors. It should also be noted that, while **FIG. 1** shows the use of a transfer gate **28** and associated transistor **29**, this structure provides advantages, but is not required.

[**0013**] Pixel cell **14** also includes two additional n-channel transistors, a source follower transistor **36** and a row select transistor **38**. Transistors **36**, **38** are coupled in series, source to drain, with the source of transistor **36** also coupled over lead **40** to voltage source V_{DD} and the drain of transistor **38** coupled to a lead **42**. The drain of the row select transistor **38** is connected via conductor **42** to the drains of similar row select transistors for other pixels in a given pixel row. A load transistor **39** is also coupled between the drain of transistor **38** and a voltage source V_{SS}, of for example 0 volts. Transistor **39** is kept on by a signal V_{LN} applied to its gate.

[**0014**] The imager includes a readout circuit **60** (**FIG. 1**) which includes a signal sample and hold (S/H) circuit including a S/H n-channel field effect transistor **62** and a signal storage capacitor **64** connected to the source follower transistor **36** through row transistor **38**. The other side of the capacitor **64** is connected to a source voltage V_{SS}. The upper side of the capacitor **64** is also connected to the gate of a p-channel output transistor **66**. The drain of the output transistor **66** is connected through a column select transistor **68** to a signal sample output node V_{OUTS} and through a load transistor **70** to the voltage supply V_{DD}. A signal called "signal sample and hold" (SHS) briefly turns on the S/H transistor **62** after the charge accumulated beneath the photogate electrode **24** has been transferred to the floating diffusion node **30** and from there to the source follower transistor **36** and through row select transistor **38** to line **42**, so that the capacitor **64** stores a voltage representing the amount of charge previously accumulated beneath the photogate electrode **24**.

[**0015**] The readout circuit **60** also includes a reset sample and hold (S/H) circuit including a S/H transistor **72** and a signal storage capacitor **74** connected through the S/H transistor **72** and through the row select transistor **38** to the source of the source follower transistor **36**. The other side of the capacitor **74** is connected to the source voltage V_{SS}. The upper side of the capacitor **74** is also connected to the gate of a p-channel output transistor **76**. The drain of the output transistor **76** is connected through a p-channel column select transistor **78** to a reset sample output node V_{OUTR} and through a load transistor **80** to the supply voltage V_{DD}. A signal called "reset sample and hold" (SHR) briefly turns on the S/H transistor **72** immediately after the reset signal RST has caused reset transistor **31** to turn on and reset the potential of the floating diffusion node **30**, so that the capacitor **74** stores the voltage to which the floating diffusion node **30** has been reset.

[**0016**] The readout circuit **60** provides correlated sampling of the potential of the floating diffusion node **30**, first of the reset charge applied to node **30** by the reset transistor **31** and then of the stored charge from the photogate **24**. The two samplings of the diffusion node **30** charges produce respective output voltages V_{OUTR} and V_{OUTS} of the readout circuit **60**. These voltages are then subtracted (V_{OUTS}-V_{OUTR}) by subtractor **82** to provide an output signal terminal **81** which is an image signal independent of pixel to pixel variations caused by fabrication variations in the reset voltage transistor **31** which might cause pixel to pixel variations in the output signal.

[**0017**] **FIG. 2** illustrates a block diagram for a CMOS imager having a pixel array **200** with each pixel cell being constructed in a manner similar to that of pixel cell **14** of **FIG. 1**. Pixel array **200** comprises a plurality of pixels arranged in a predetermined number of columns and rows. The pixels of each row in array **200** are all turned on at the same time by a row select line, such as line **86**, and the pixels of each column are selectively output by a column select line, such as line **42**. A plurality of rows and column lines are provided for the entire array **200**. The row lines are selectively activated by the row driver **210** in response to row address decoder **220** and the column select lines are selectively activated by the column driver **260** in response to column address decoder **270**. Thus, a row and column address is provided for each pixel. The CMOS imager is operated by the control circuit **250** which controls address decoders **220**, **270** for selecting the appropriate row and column lines for pixel readout, and row and column driver circuitry **210**, **260** which apply driving voltage to the drive transistors of the selected row and column lines.

[**0018**] **FIG. 3** shows a simplified timing diagram for the signals used to transfer charge out of pixel cell **14** of the CMOS imager of **FIG. 1**. The photogate signal PG is nominally set to 5V and pulsed from 5V to 0V during integration. The reset signal RST is nominally set at 2.5V. As illustrated in **FIG. 3**, the process begins at time t_0 by briefly pulsing reset voltage RST to 5V. The RST voltage, which is applied to the gate **32** of the reset transistor **31**, causes transistor **31** to turn on and the floating diffusion node **30** to charge to the V_{DD} voltage present at n+ region **34** (less the voltage drop V_{TH} of transistor **31**). This resets the floating diffusion node **30** to a predetermined voltage (V_{DD}-V_{TH}). The charge on the floating diffusion node **30** is applied to the gate of the source follower transistor **36** to control the current passing through transistor **38**, which has been turned on by a row select (ROW) signal, and load transistor **39**. This current is translated into a voltage on line **42** which is next sampled by providing a SHR signal to the S/H transistor **72**, which charges capacitor **74** with the source follower transistor output voltage on line **42** representing the reset charge present at floating diffusion node **30**. The PG signal is next pulsed to 0 volts, causing charge to be collected in n+ region **26**.

[0019] A transfer gate voltage TX, similar to the reset pulse RST, is then applied to transfer gate **28** of transistor **29** to cause the charge in n+ region **26** to transfer to floating diffusion node **30**. It should be understood that, for the case of a photogate, the transfer gate voltage TX may be pulsed or held to a fixed DC potential. For the implementation of a photodiode with a transfer gate, the transfer gate voltage TX must be pulsed. The new output voltage on line **42** generated by source follower transistor **36** current is then sampled onto capacitor **64** by enabling the sample and hold switch **62** by signal SHS. The column select signal is next applied to transistors **68** and **70** and the respective charges stored in capacitors **64** and **74** are subtracted in subtractor **82** to provide a pixel output signal at terminal **81**. It should also be noted that CMOS imagers may dispense with the transfer gate **28** and associated transistor **29**, or retain these structures while biasing the transfer transistor **29** to an always "on" state.

[0020] For black and white imaging, each pixel cell **14** (**FIG. 1**) represents a pixel of light energy. Color imaging, however, requires three pixel cells **14** for the formation of a single color pixel. For example, a conventional color pixel sensor **50** is illustrated in **FIG. 4** as including a red active pixel sensor cell **52**, a blue active pixel sensor cell **54** and a green active pixel sensor cell **56**, spaced apart on the semiconductor substrate **16** by isolation regions **19**. Each of the red, blue and green active pixel sensor cells **52**, **54**, **56** have respective red, blue and green filters **53**, **55**, **57**, which allow only red, blue and green photons, respectively, to pass through. Thus, the red, blue and green active pixel sensor cells **52**, **54**, **56** operate in a similar way to the pixel cell **14** (**FIG. 1**), except that the information provided by each of the red, blue and green active pixel sensor cells **52**, **54**, **56** is limited by the intensities of the red, blue and green light, respectively.

[0021] One of the drawbacks of using a color pixel sensor, such as the color pixel sensor **50** of **FIG. 4**, is that the minority carriers in the blue active pixel sensor cell **54**, for example, are substantially more likely to be lost in recombination than the minority carriers formed in the red and green active pixel sensor cells **52**, **56**. The difference in the recombination rates is due to the relatively shallow penetration depths of the blue photons, the higher majority carrier concentration that exists in the n+ region **30** than in the substrate **16**, and the depth of the junction. For example, even though the average penetration of a blue photon in a CMOS photodiode is approximately 0.2μ, a large number of blue photons fail to penetrate beyond the 0.1μ junction. This way, a large amount of these photons are lost to recombinations and the blue cell response remains substantially below the red cell and green cell responses.

[0022] One technique for equalizing the red, blue and green responses is to increase the amplification provided by the column sense amplifier that corresponds to the blue active pixel sensor cell **54**. For example, if the blue response is "n" times lower that the red and green responses, equalized red, blue and green responses are obtained if the column sense amplifiers corresponding to the blue active pixel sensor cell **54** are set to provide a gain of "n" times. This technique, however, introduces noise by the charge-to-voltage conversion process, as well as by the sense amplifiers themselves. Thus, along with the blue signal, the noise also increases "n" times.

[0023] There is needed, therefore, an improved pixel sensor cell for use in an imager that exhibits improved color separation, a better signal-to-noise ratio, and reduced cross talk. A method of fabricating a pixel sensor cell exhibiting these improvements is also needed.

SUMMARY OF THE INVENTION

[0024] The present invention provides multiple graded doped regions formed below respective pixel sensor cells of a CMOS imager. In an exemplary embodiment, a deep retrograde p-well is formed under a red pixel sensor cell of a semiconductor substrate to increase the red response. A shallow p-well is formed under the blue pixel sensor cell to decrease the red and green responses, while a shallow retrograde p-well is formed below the green pixel sensor cell to increase the green response and decrease the red response. Each of the multiple graded doped regions would have an entire array of respective pixels formed therein, and may also have peripheral circuitry formed therein. If the peripheral circuitry is formed in the multiple graded doped regions, the multiple graded doped regions may have a different dopant profile in the peripheral region than in the array region.

[0025] Also provided are methods for forming a color pixel cell having multiple graded doped regions of the present invention.

[0026] Additional advantages and features of the present invention will be apparent from the following detailed description and drawings which illustrate preferred embodiments of the invention.

BRIEF DESCRIPTION OF THE DRAWINGS

[0027] **FIG. 1** is a representative circuit of a active pixel cell of a CMOS imaging system.

[0028] **FIG. 2** is a block diagram of a CMOS pixel sensor chip.

[0029] **FIG. 3** is a representative timing diagram of a CMOS imager.

[0030] **FIG. 4** is a cross-sectional and schematic view of a color pixel.

[0031] **FIG. 5** is a cross-sectional and schematic view of a color pixel fabricated in accordance with a first embodiment of the present invention.

[0032] **FIG. 6** is a cross-sectional view of the color pixel of **FIG. 4** at a stage of processing subsequent to that shown in **FIG. 5**.

[0033] **FIG. 7** is a cross-sectional view of the color pixel of **FIG. 4** at a stage of processing subsequent to that shown in **FIG. 6**.

[0034] **FIG. 8** is a cross-sectional view of the color pixel of **FIG. 4** at a stage of processing subsequent to that shown in **FIG. 7**.

[0035] **FIG. 9** is a cross-sectional view of the color pixel of **FIG. 4** at a stage of processing subsequent to that shown in **FIG. 8**.

[0036] **FIG. 10** is a cross-sectional view of the color pixel of **FIG. 4** at a stage of processing subsequent to that shown in **FIG. 9**.

[0037] **FIG. 11** is a cross-sectional view of the color pixel of **FIG. 4** at a stage of processing subsequent to that shown in **FIG. 10**.

[0038] **FIG. 12** is a cross-sectional view of the color pixel of **FIG. 4** at a stage of processing subsequent to that shown in **FIG. 11**.

[0039] **FIGS. 13***a*-**13***c* illustrate the dopant concentration as a function of surface depth for each of the wells of the color pixel of **FIG. 12**.

[0040] **FIG. 14** is a cross-sectional view of the middle portion of the color pixel of **FIG. 12**.

[0041] **FIG. 15** is an illustration of a computer system having a CMOS imager with color pixels formed according to the present invention.

DETAILED DESCRIPTION OF PREFERRED EMBODIMENTS

[0042] In the following detailed description, reference is made to the accompanying drawings which form a part hereof, and in which is shown by way of illustration specific embodiments in which the invention may be practiced. These embodiments are described in sufficient detail to enable those skilled in the art to practice the invention, and it is to be understood that other embodiments may be utilized, and that structural, logical and electrical changes may be made without departing from the spirit and scope of the present invention.

[0043] The terms "wafer" and "substrate" are to be understood as a semiconductor-based material including silicon-on-insulator (SOI) or silicon-on-sapphire (SOS) technology, doped and undoped semiconductors, epitaxial layers of silicon supported by a base semiconductor foundation, and other semiconductor structures. Furthermore, when reference is made to a "wafer" or "substrate" in the following description, previous process steps may have been utilized to form regions or junctions in the base semiconductor structure or foundation. In addition, the semiconductor need not be silicon-based, but could be based on silicon-germanium, germanium, or gallium arsenide. For exemplary purposes an imager formed of n-channel devices in a retrograde p-well is illustrated and described, but it should be understood that the invention is not limited thereto,) and may include other combinations such as an imager formed of p-channel devices in a retrograde n-well.

[0044] The term "pixel" refers to a picture element unit cell containing a photosensor and transistors for converting electromagnetic radiation to an electrical signal. For purposes of illustration, a representative pixel is illustrated in the figures and description herein and, typically, fabrication of all pixels in an imager will proceed simultaneously in a similar fashion.

[0045] The term "retrograde well" refers to a doped region in a substrate where the peak concentration of the dopant is lower than that of the electrically active surface region of any device which may be eventually formed in the well.

[0046] Referring now to the drawings, where like elements are designated by like reference numerals, FIGS. **5**-**14** illustrate an exemplary embodiment of a method of forming a color pixel cell group **100** (**FIG. 12**) having respective multiple graded doped regions, such as doped regions **160**, **170** and **180**. The **FIG. 5** structure depicts a portion of a semiconductor substrate **16** having isolation regions **119**, which may be field oxide regions (FOX), for example, and which have been already formed according to conventional semiconductor processing techniques. For example, the isolation regions **119** may be formed by thermal oxidation of the underlying substrate material in a LOCOS process, or by etching trenches and filling them with oxide in an STI process, among others.

[0047] Next, as shown in FIGS. **6**-**7**, a first doped region **160** for a red pixel cell is formed in the semiconductor substrate **16**. In an exemplary embodiment of the present invention, the first doped region **160** is a deep well, advantageously being a retrograde well, having a first conductivity type, which for exemplary purposes is treated as a p-type. For this, the semiconductor substrate **16** is patterned with a first pattern layer **164** (**FIG. 6**), preferably a photoresist mask, to create an area **165** on the substrate surface **117** of the semiconductor substrate **16**, which will allow a first dopant implantation and the formation of the deep retrograde p-well **160** (**FIG. 7**). With the first pattern layer **164** as a mask, p-type impurity dopants such as boron, for example, are implanted in the area **165** of the semiconductor substrate **16**. The p-type dopant atoms are implanted in the semiconductor substrate **16** using conventional implantation apparatus, such as ion implantation apparatus, and by known methods to one of ordinary skill in the art.

[0048] The deep retrograde p-well **160** (**FIG. 7**) is formed at a depth D_1 of about 1 micron to about 8 microns, more preferably of about 2 micron to about 6 microns, from a substrate surface **117**. The depth D_1 may be adjusted, however, according to the device characteristics, so that the electron-hole pairs corresponding to a red color pixel cell **152** (**FIG. 12**) are contained within the perimeter of the deep retrograde p-well **160**.

[0049] To better illustrate the characteristics of the deep retrograde p-well **160**, reference is now made to **FIG. 13***a*, which depicts the concentration of boron (B) atoms per cubic centimeter (cm^3) of the deep retrograde p-well **160** as a function of the implantation depth. As shown in **FIG. 13***a*, the deep retrograde p-well **160** has a vertically graded dopant concentration that is lower at the substrate surface **117**, and highest at the bottom of the well. The dopant concentration C_1s (**FIG. 13***a*) at the top of the deep retrograde p-well **160**, that is at the surface level S (**FIG. 13***a*), is within the range of about 5×10^{14} to about 1×10^{18} atoms per cm^3, and is preferably within the range of about 1×10^{16} to about 1×10^{17} atoms per cm^3, and most preferably is about 4×10^{16} atoms per cm^3. At the bottom of the deep retrograde p-well **60**, that is, at depth D_1 (**FIG. 13***a*), the dopant concentration C_1max (**FIG. 13***a*) is within the range of about 1×10^{16} to about 2×10^{18} atoms per cm^3, and is preferably within the range of about 4×10^{16} to about 1×10^{18} atoms per cm^3, and most preferably is about 1×10^{17} atoms per cm^3. The single deep retrograde p-well **60** spans only red pixel cell **152** (**FIG. 12**) of the color pixel cell **100** (**FIG. 12**).

[0050] Referring now to FIGS. **8**-**9**, a second doped region **170** for a blue pixel cell is next formed in the semiconductor substrate **16**, lateral to the first doped region **160** and below and adjacent to the substrate surface **117**. In an exemplary embodiment of the invention, this second doped region **170** is a shallow p-well **170** (**FIG. 9**) which may be formed by

a similar or different technique as that for the formation of the deep retrograde p-well **160** (**FIG. 7**). As shown in **FIG. 8**, the semiconductor substrate **16** is patterned with a second pattern layer **166**, preferably a photoresist mask, to create an area **167** (**FIG. 8**) on the substrate surface **117** of the substrate **16**, to further allow a second dopant implantation and the formation of the shallow p-well **170** (**FIG. 9**). With the second pattern layer **166** as a mask, p-type impurity dopants such as boron, for example, are implanted in the area **167** of the semiconductor substrate **16**. The p-type dopant atoms are implanted in the semiconductor substrate **16** using conventional implantation apparatus, such as ion implantation apparatus, and by known methods to one of ordinary skill in the art.

[**0051**] The shallow p-well **170** (**FIG. 9**) is formed at a depth D_2 of about 0.1 micron to about 0.5 microns, more preferably of about 0.1 micron to about 0.25 microns, from the substrate surface **117**. The depth D_2 may be adjusted, however, according to the device characteristics, so that the electron-hole pairs corresponding to a blue pixel cell **154** (**FIG. 12**) are contained within the perimeter of the shallow p-well **170**.

[**0052**] To better illustrate the characteristics of the shallow p-well **170**, reference is now made to **FIG. 13***b*, which depicts the concentration of boron (B) atoms per surface area of the shallow p-well **170** as a function of the implantation depth. As shown in **FIG. 13***b*, the dopant concentration C_2 at the top of the shallow p-well **170**, that is at the surface level S (**FIG. 13***b*), is within the range of about 5×10^{14} to about 1×10^{18} atoms per cm^3, and is preferably within the range of about 1×10^{16} to about 1×10^{17} atoms per cm^3, and most preferably is about 4×10^{16} atoms per cm^3. In any event, the single shallow p-well **170** spans only blue pixel cell **154** (**FIG. 12**) of the color pixel cell **100**, as depicted in **FIG. 12**.

[**0053**] Referring now back to FIGS. **10-11**, a third doped region **180** (**FIG. 11**) for a green pixel cell is formed in the semiconductor substrate **16**, lateral to the first and second doped regions **160**, **170** and at a depth D_3 (**FIG. 11**) below the substrate surface **117**. In an exemplary embodiment of the invention, this third doped region **180** is a shallow retrograde p-well **180** (**FIG. 11**). The shallow retrograde p-well **180** may be also formed by similar or different techniques to those used for the formation of the first deep retrograde p-well **160** and the second shallow p-well **170**. The shallow retrograde p-well **180** is formed at a depth D_3 of about 0.5 micron to about 3 microns, more preferably of about 0.5 microns to about 2.0 microns, from the substrate surface **117**. The depth D_3 may be adjusted, however, according to the device characteristics, so that the electron-hole pairs corresponding to a green pixel cell **156** (**FIG. 12**) are contained within the perimeter of the shallow retrograde p-well **180**. In any event, the depth D_1, corresponding to the deep retrograde p-well **160**, is substantially greater than the depth D_3, corresponding to the shallow retrograde p-well **180**.

[**0054**] The semiconductor substrate **16** is patterned with a third pattern layer **172**, preferably a photoresist mask, to create an area **173** (**FIG. 10**) on the substrate surface **117** of the semiconductor substrate **16**, to allow a third dopant implantation and the formation of the shallow retrograde p-well **180** (**FIG. 11**). With the second pattern layer **166** as a mask, p-type impurity dopants such as boron, for example, are implanted in the area **167** of the semiconductor substrate **16**. The p-type dopant atoms are implanted in the semiconductor substrate **16** using conventional implantation apparatus, such as ion implantation apparatus, and by known methods to one of ordinary skill in the art.

[**0055**] To better illustrate the characteristics of the shallow retrograde p-well **180**, reference is now made to **FIG. 13***c*, which depicts the concentration of boron (B) atoms per surface area of the shallow retrograde p-well **180** as a function of the implantation depth. As shown in **FIG. 13***c*, the shallow retrograde p-well **180** has a vertically graded dopant concentration that is lowest at the substrate surface **117**, and highest at the bottom of the well. The dopant concentration C_3s (**FIG. 13***c*) at the top of the shallow retrograde p-well **180**, that is at the surface level S (**FIG. 13***c*), is within the range of about 5×10^{14} to about 1×10^{18} atoms per cm^3, and is preferably within the range of about 1×10^{16} to about 1×10^{17} atoms per cm^3, and most preferably is about 4×10^{16} atoms per cm^3. At the bottom of the shallow retrograde p-well **180**, that is, at depth D_3 (**FIG. 13***c*), the dopant concentration C_3max (**FIG. 13***c*) is within the range of about 2×10^{16} to about 1×10^{18} atoms per cm^3, and is preferably within the range of about 2×10^{16} to about 1×10^{18} atoms per cm^3, and most preferably is about 1×10^{17} atoms per cm^3. The single deep retrograde p-well **60** spans only red pixel cell **152** (**FIG. 12**) of the color pixel cell group **100** (**FIG. 12**). The single shallow retrograde p-well **180** spans only green pixel cell **156** (**FIG. 12**) of the color pixel cell group **100**, as depicted in **FIG. 12**.

[**0056**] The three red, blue and green pixel cells **152**, **154** and **156** form a color pixel cell group **100**, as schematically represented in **FIG. 12**. Each of the red, blue and green pixel cells **152**, **154** and **156** includes a reset transistor **131***a*, **131***b* and **131***c*, respectively, and a charge transfer transistor **129***a*, **129***b* and **129***c*. Each cell is also associated with two additional n-channel transistors: a source-follower transistor **136***a*, **136***b*, and **136***c*, and a row select transistor **138***a*, **138***b* and **138***c*, respectively. As shown in **FIG. 12**, the reset transistor **131***a* of the red pixel cell **152** is formed by reset gate **132***a* and n+ regions **130***a* and **134***a*, which are formed within the deep retrograde p-well **160**. Similarly, the reset transistor **131***b* of the blue pixel cell **154** (**FIG. 12**) is formed by reset gate **132***b* and n+ regions **130***b* and **134***b*, which are formed within the shallow p-well **170**. The reset transistor **131***c* of the green pixel cell **156** (**FIG. 12**) is formed by reset gate **132***c* and n+ regions **130***c* and **134***c*, which are formed within the shallow retrograde p-well **180**. Likewise, the charge transfer transistor **129***a* of the red pixel cell **152** is formed by charge transfer gate **128***a* and n+ regions **126***a* and **130***a*, which are formed within the deep retrograde p-well **160**. The charge transfer transistor **129***b* of the blue pixel cell **154** is formed by charge transfer gate **128***b* and n+ regions **126***b* and **130***b*, which are formed within the shallow p-well **170**. The charge transfer transistor **129***c* of the green pixel cell **156** is formed by charge transfer gate **128***c* and n+ regions **126***c* and **130***c*, which are formed within the the shallow p-well **170**. The concentrations of boron implants as a function of the implantation depth for each of the deep retrograde p-well **160**, the shallow p-well **170**, and the shallow p-well **170**, respectively, are schematically illustrated in **FIGS. 13***a*-**13***c*.

[0057] **FIG. 14** illustrates a cross-sectional view of the middle portion of the color pixel cell **100** (**FIG. 12**), depicting only the blue pixel cell **154** which is built in the second shallow p-well **170**. As shown in **FIG. 14**, the transistor gates forming the blue pixel cell **154** are a transfer gate **128***b* for a transfer transistor **129***b* and a reset transistor gate **132***b* for the reset transistor **131** b. A photosensing area **126***b* may also be formed as a photodiode or a photogate **124** structure and including an associated color filter **155**. Although the photosensitive element in the blue pixel cell **154** is shown as the photogate **124**, other photosensitive elements, such as a photodiode or a photoconductor, could be used also, as desired. The source follower transistor **136***b* and the row select transistor **138***b* are shown only schematically in **FIG. 14**.

[0058] The transfer gate **128***b* and the reset gate **132***b* include a gate oxide layer **106** formed over the shallow p-well **170**, and a conductive layer **108** of doped polysilicon, tungsten, or other suitable material, over the gate oxide layer **106**. An insulating cap layer **110** of silicon dioxide, silicon nitride or ONO (oxide-nitride-oxide), for example, may be formed if desired. Alternatively, a more conductive layer, such as a silicide layer (not shown), may be formed between the conductive layer **108** and the cap **110** of the transfer gate stack **128***b*, source follower gate, row select gate, and reset gate stack **132***b*, if desired. Insulating sidewalls **112** are also formed on the sides of the gate stacks **128***b*, **132***b*. As known in the art, these insulating sidewalls may be formed of silicon dioxide, silicon nitride or ONO, for example. The transfer gate **128***b* is not required, but may advantageously be included. The photogate **124** is a semitransparent conductor and is shown in **FIG. 14** as overlapping the n+ region **126***b*, which is formed within the shallow p-well **170**.

[0059] A doped region **126***b* (**FIG. 14**) is a photosite for storing photogenerated charges which pass through the photogate **124**. A doped region **130***b* is also formed in between the reset transistor gate **132***b* and the transfer gate **128***b*. The doped region **130***b* is the source for the reset transistor **131***b*. A doped region **134***b* that acts as a drain for the reset transistor **131***b* is also formed on the other side of the reset transistor gate **132***b*, as also illustrated in **FIG. 14**. The doped regions **126***b*, **130***b*, **134***b* are doped to a second conductivity type, which for exemplary purposes is treated as n-type. The second doped region **130***b* is the floating diffusion region, sometimes also referred to as a floating diffusion node, and it serves as the source for the reset transistor **131***b*. The third doped region **134***b* is the drain of the reset transistor **131***b*, and is also connected to voltage source Vdd.

[0060] Doped regions **126***b*, **130***b*, and **134***b* (**FIG. 14**) are formed in the shallow p-well **170**, and are doped to a second conductivity type, which for exemplary purposes will be considered to be n-type. The doping level of the doped regions **126***b*, **130***b*, **134***b* may vary but should be higher than the doping level at the top of the shallow p-well **170**. If desired, multiple masks and resists may be used to dope these regions to different levels. Doped region **126***b* may be variably doped, such as either (n+) or (n−) for an n-channel device. Doped region **134***b* should be strongly doped, for example, for an n-channel device, the doped region **134***b* will be doped as (n+). Doped region **130***b* is typically strongly doped (n+), and would not be lightly doped (n−) unless a buried contact is also used.

[0061] As shown in **FIG. 14**, as light radiation **12** in the form of blue photons (corresponding to the blue pixel cell **154**) strikes the photosite **126***b*, photo-energy is converted to electrical signals, such as carriers **120**, which are stored in the photosite **126***b*. The absorption of light creates electron-hole pairs. For the case of an n-doped photosite in a p-well, it is the electrons that are stored. For the case of a p-doped photosite in an n-well, it is the holes that are stored. In the exemplary blue pixel cell **154** having n-channel devices formed in the p-type shallow well **170**, the carriers **120** stored in the photosite **126***b* are electrons. The shallow p-well **170** acts to reduce carrier loss to the substrate **16** by forming a concentration gradient that modifies the band diagram and serves to reflect electrons back towards the photosite **126**, thereby increasing quantum efficiency of the blue pixel cell **154**. Similarly, the deep retrograde p-well **160** increases the red response of the red pixel cell **152** (**FIG. 12**), while the shallow retrograde p-well **180** increases the green response of the green pixel cell **156** (**FIG. 12**) and decreases the red response.

[0062] Although in the exemplary embodiment described above, the first, second and third doped regions **160**, **170** and **180** are formed in sequential steps, the invention is not limited to this embodiment. For example, a single pattern layer, preferably a photoresist mask, may be employed to simultaneously create three separate implantation regions over the semiconductor substrate **16**. This way, p-type dopants may be implanted in the three separate implantation regions, either subsequently or simultaneously, to form, for example, the deep retrograde p-well **160**, the second shallow p-well **170**, and the shallow retrograde p-well **180**.

[0063] Although only one color pixel cell group **100** is shown in **FIG. 12** comprising only three color pixel cells **152**, **154** and **156**, it must be understood that in fact a plurality of color pixel cells group **100** may be formed on the semiconductor substrate **16**. Also, although the color pixel cell group **100** of **FIG. 12** comprises only three color pixel cells **152**, **154** and **156**, it must be understood that the present invention contemplates a color pixel cell with more than three color pixel cells, for example with four color pixel cells, each having a multiple graded doped region formed below.

[0064] Further, although the embodiment described above refers to the formation of multiple graded p-wells, such as the deep retrograde p-well **160**, the second shallow p-well **170** or the shallow retrograde p-well **180**, formed by implanting a p-type dopant, such as boron, for example, the invention is not limited to this embodiment. Thus, if only one or all of the multiple graded wells are to be an n-type well, an n-type dopant, such as arsenic, antimony, or phosphorous, will be implanted. Multiple high energy implants may be also used to tailor the profile of each of the deep retrograde p-well **160**, the second shallow p-well **170** or the shallow retrograde p-well **180**. Further, if peripheral circuitry is formed in the multiple graded doped regions, the multiple graded doped regions may have a different dopant profile in the peripheral region than in the array region.

[0065] Moreover, although the color pixel cell group **100** of **FIG. 12** comprises three color pixel cells **152**, **154** and **156**, each having a multiple graded doped region formed below, it must be understood that the present invention also

contemplates a pixel cell with any number of graded doped regions, for example with two multiple graded doped regions.

[**0066**] The color pixel cell group **100** (**FIG. 12**) is essentially complete at this stage, and conventional processing methods may be used to form contacts and wiring to connect gate lines and other connections in the color pixel cell group **100**. For example, the entire surface may then be covered with a passivation layer of silicon dioxide, BSG, PSG, or BPSG, among others, which is CMP planarized and etched to provide contact holes, which are then metallized to provide contacts to the photogate, reset gate, and transfer gate. Conventional multiple layers of conductors and insulators may also be used to interconnect the structures in the manner shown in **FIG. 1**.

[**0067**] A typical processor based system which includes a CMOS imager device according to the present invention is illustrated generally at **400** in **FIG. 15**. A processor based system is exemplary of a system having digital circuits which could include CMOS imager devices. Without being limiting, such a system could include a computer system, camera system, scanner, machine vision system, vehicle navigation system, video telephone, surveillance system, auto focus system, star tracker system, motion detection system, image stabilization system and data compression system for high-definition television, all of which can utilize the present invention.

[**0068**] A processor system, such as a computer system, for example generally comprises a central processing unit (CPU) **444**, for example, a microprocessor, that communicates with an input/output (I/O) device **446** over a bus **452**. The CMOS imager **442** also communicates with the system over bus **452**. The computer system **400** also includes random access memory (RAM) **448**, and, in the case of a computer system may include peripheral devices such as a floppy disk drive **454** and a compact disk (CD) ROM drive **456** which also communicate with CPU **444** over the bus **452**. CMOS imager **442** is preferably constructed as an integrated circuit which includes color pixel cells containing a photosensor, such as a photogate or photodiode formed with multiple graded doped regions, as previously described with respect to FIGS. **5-14**. The CMOS imager **442** may be combined with a processor, such as a CPU, digital signal processor or microprocessor, with or without memory storage in a single integrated circuit, or may be on a different chip than the processor.

[**0069**] It should again be noted that, although the invention has been described with specific reference to CMOS imaging circuits having a photogate and a floating diffusion region, the invention has broader applicability and may be used in any CMOS imaging apparatus. Similarly, the process described above is but one method of many that could be used. The above description and drawings illustrate preferred embodiments which achieve the objects, features and advantages of the present invention. It is not intended that the present invention be limited to the illustrated embodiments. Any modification of the present invention which comes within the spirit and scope of the following claims should be considered part of the present invention.

What is claimed as new and desired to be protected by Letters Patent of the United States is:

1. A color pixel cell for an imaging device, said color pixel cell comprising:

a first, second and third doped regions of a first conductivity type formed in a substrate, at least one of said first, second and third doped regions having a substantially different depth in said substrate from the others;

a first, second and third photosensitive regions formed in said respective first, second and third doped regions for receiving first, second and third photocharges corresponding to a particular color wavelength; and

a first, second and third floating diffusion regions of a second conductivity type formed in said respective first, second and third doped regions for receiving said respective photocharges transferred from said respective first, second and third photosensitive regions.

2. The color pixel of claim 1 wherein at least two of said first, second, and third doped regions have a substantially different depth from each other.

3. The color pixel of claim 1 wherein all three of said first, second, and third doped regions have a substantially different depth from each other.

4. The color pixel cell of claim 1, wherein said first doped region, said first photosensitive region and said first floating diffusion region correspond to a red sensor cell of said imaging device.

5. The color pixel cell of claim 1 wherein at least one of said first, second, and third doped regions is a retrograde well.

6. The color pixel cell of claim 1 wherein at least two of said first, second, and third doped regions is a retrograde well.

7. The color pixel cell of claim 1 wherein said first, second, and third doped regions are for collecting charges for red, blue and green wavelengths respectively and said first and third doped regions are retrograde wells.

8. The color pixel cell of claim 7 wherein said second doped region is a non-retrograde well.

9. The color pixel cell of claim 7 wherein the doping concentration at the surface of said first doped region is within the range of about 5×10^{14} to 1×10^{18} atoms per cm3.

10. The color pixel cell of claim 9 wherein the doping concentration at the surface of said first doped region is within the range of about 1×10^{16} to about 1×10^{17} atoms per cm3.

11. The color pixel cell of claim 10 wherein the doping concentration at the surface of said first doped region is about 4×10^{16} atoms per cm3.

12. The color pixel cell of claim 7 wherein the doping concentration at the bottom of said first doped region is within a range of about 1×10^{16} to about 2×10^{18} atoms per cm3.

13. The color pixel cell of claim 12 wherein the doping concentration at the bottom of said first doped region is within the range of about 2×10^{16} to about 1×10^{18} atoms per cm3.

14. The color pixel cell of claim 13 wherein the doping concentration at the bottom of said first doped region is about 1×10^{17} atoms per cm3.

15. The color pixel cell of claim 7 wherein the doping concentration at the surface of the second doped region is within the range of about 5×10^{18} to about 1×10^{18} atoms per cm3.

16. The color pixel cell of claim 15 wherein the doping concentration at the surface of said second doped region is within the range of about 1×10^{16} to about 1×10^{17} atoms per cm3.

17. The color pixel cell of claim 16 wherein the doping concentration at the surface of said second doped region is about 4×10^{16} atoms per cm3.

18. The color pixel cell of claim 7 wherein the doping concentration at the surface of said third doped region is within the range of about 5×10^{14} to about 1×10^{18} atoms per cm3.

19. The color pixel cell of claim 18 wherein the doping concentration at the surface of said third doped region is within the range of about 1×10^{16} to about 1×10^{17} atoms per cm3.

20. The color pixel cell of claim 19 wherein the doping concentration at the surface of said third doped region is about 4×10^{16} atoms per cm3.

21. The color pixel cell of claim 20 wherein the doping concentration at the bottom of said third doped region is within a range of about 1×10^{16} to about 2×10^{18} atoms per cm3.

22. The color pixel cell of claim 21 wherein the doping concentration at the bottom of said third doped region is within the range of about 2×10^{16} to about 1×10^{18} atoms per cm3.

23. The color pixel cell of claim 22 wherein the doping concentration at the bottom of said third doped region is about 1×10^{17} atoms per cm3.

24. The color pixel cell of claim 1, wherein said second doped region, said second photosensitive region and said second floating diffusion region correspond to a blue sensor cell of said imaging device.

25. The color pixel cell of claim 1, wherein said third doped region, said third photosensitive region and said third floating diffusion region correspond to a green sensor cell of said imaging device.

26. The color pixel cell of claim 1, wherein said first conductivity type is p-type, and said second conductivity type is n-type.

27. The color pixel cell of claim 26, wherein said first doped region is for a red sensor cell and is a deep retrograde well of a first depth.

28. The color pixel cell of claim 27, wherein said second doped region is for a blue sensor cell and is a shallow well of a second depth.

29. The color pixel cell of claim 28, wherein said third doped region is for a green sensor cell and is a shallow retrograde well of a third depth.

30. The color pixel cell of claim 29, wherein said first depth is substantially greater than said second depth.

31. The color pixel cell of claim 30, wherein said first depth is substantially greater than said third depth.

32. The color pixel cell of claim 31, wherein said third depth is substantially greater than said second depth.

33. The color pixel cell of claim 1, wherein said first conductivity type is n-type, and said second conductivity type is p-type.

34. The color pixel cell of claim 1, wherein each of said respective first, second and third photosensitive regions further comprises a respective photosensor for controlling the collection of charges in said photosensitive region.

35. The color pixel cell of claim 34, wherein each of said photosensor is a photodiode sensor.

36. The color pixel cell of claim 34, wherein each of said photosensor is a photogate sensor.

37. The color pixel cell of clam **34**, wherein each of said photosensor is a photoconductor sensor.

38. A color pixel cell for an imaging device, said color pixel cell comprising:

a red pixel cell, a blue pixel cell and a green pixel cell, each comprising a respective first, second and third multiple graded wells of a first conductivity type formed in a substrate, said first, second and third multiple graded wells having substantially different depths in said substrate;

a photosensor formed in each one of said first, second and third multiple graded wells for sensing respective red, blue and green color wavelengths;

a reset transistor having a gate stack formed in each one of said first, second and third multiple graded wells;

a floating diffusion region of a second conductivity type formed in each one of said first, second and third multiple graded wells between said photosensor and said reset transistor for receiving charges from said photosensor, said reset transistor operating to periodically reset a charge level of said floating diffusion region; and

an output transistor having a gate electrically connected to said floating diffusion region.

39. The color pixel cell of claim 38, wherein said first multiple graded well is a deep retrograde well of a first depth.

40. The color pixel cell of claim 39, wherein said deep retrograde well is a deep retrograde p-well.

41. The color pixel cell of claim 39, wherein said second multiple graded well is a shallow well of a second depth.

42. The color pixel cell of claim 38, wherein said shallow well is a shallow p-well.

43. The color pixel cell of claim 38, wherein said third multiple graded well is a shallow retrograde well of a third depth.

44. The color pixel cell of claim 40, wherein said shallow retrograde well is a shallow retrograde p-well.

45. The color pixel cell of claim 40, wherein said first, second, and third multiple graded well are at respective first, second and third depths and said first depth is substantially greater than said second and third depths.

46. The color pixel cell of claim 45, wherein said third depth is substantially greater than said second depth.

47. The color pixel cell of claim 38, wherein said photosensor further comprises a doped region of a second conductivity type located in each one of said first, second and third multiple graded wells.

48. The color pixel cell of claim 47, wherein said photosensor is a photodiode sensor.

49. The color pixel cell of claim 47, wherein said photosensor is a photoconductor sensor.

50. The color pixel cell of claim 38, further comprising a transfer gate located between said photosensor and said floating diffusion region in each of said wells.

51. The color pixel cell of claim 47, wherein said photosensor is a photogate sensor.

52. The color pixel cell of claim 38, wherein said first conductivity type is p-type, and said second conductivity type is n-type.

53. The color pixel cell of claim 38, wherein said first conductivity type is n-type, and said second conductivity type is p-type.

54. A CMOS imager comprising:

a substrate having a first, second and third multiple graded wells of a first conductivity type, said first, second and third multiple graded wells having substantially different depths in said substrate, and wherein each of said first, second and third multiple graded wells has a respective photosensor formed therein for sensing respective red, blue and green color wavelengths;

an array of pixel sensor cells formed in said first, second and third multiple graded wells; and

a circuit electrically connected to receive and process output signals from said array.

55. The CMOS imager of claim 54, wherein said first multiple graded well is a deep retrograde well having a first depth.

56. The CMOS imager of claim 55, wherein said deep retrograde well is a deep retrograde p-well.

57. The CMOS imager of claim 55, wherein said second multiple graded well is a shallow well having a second depth.

58. The CMOS imager of claim 54, wherein said shallow well is a shallow p-well.

59. The CMOS imager of claim 57, wherein said third multiple graded well is a shallow retrograde well having a third depth.

60. The CMOS imager of claim 59, wherein said shallow retrograde well is a shallow retrograde p-well.

61. The CMOS imager of claim 59, wherein said first depth is substantially greater than said second and third depths, and said third depth is substantially greater than said second depth.

62. The CMOS imager of claim 54, wherein each pixel sensor cell comprises a floating diffusion region of a second conductivity type located in each of said first, second and third multiple graded wells.

63. The CMOS imager of claim 62, wherein said first conductivity type is p-type, and said second conductivity type is n-type.

64. The CMOS imager of claim 62, wherein said first conductivity type is n-type, and said second conductivity type is p-type.

65. The CMOS imager of claim 62, wherein each pixel sensor cell further comprises a transfer gate located between said photosensor and said floating diffusion region.

66. The CMOS imager of claim 55, wherein said photosensor is a photogate sensor.

67. The CMOS imager of claim 55, wherein said photosensor is a photodiode sensor.

68. The CMOS imager of claim 55, wherein said photosensor is a photoconductor sensor.

69. An imager comprising:

an array of color pixel cells formed in a substrate having at least one deep retrograde well of a first conductivity type, at least one shallow well of said first conductivity type, and at least one shallow retrograde well of said first conductivity type, wherein each pixel sensor cell has a photosensor for sensing a respective particular color wavelength, and wherein said deep retrograde well, said shallow well and said shallow retrograde well have substantially different depths;

a circuit formed in the substrate and electrically connected to the array for receiving and processing signals representing an image output by the array and for providing output data representing the image; and

a processor for receiving and processing data representing the image.

70. The imager of claim 69, wherein said array, said circuit, and said processor are formed on a single substrate.

71. The imager of claim 69, wherein said array and said circuit are formed on a first substrate, and said processor is formed on a second substrate.

72. The imager of claim 69, wherein said at least one deep retrograde well has a depth substantially greater than the depths of said at least one shallow well and said at least one shallow retrograde well.

73. The imager of claim 69, wherein each pixel sensor cell further comprises a floating diffusion region of a second conductivity type located in each one of said at least one deep retrograde well, at least one shallow well and at least one shallow retrograde well.

74. The imager of claim 73, wherein said first conductivity type is p-type, and said second conductivity type is n-type.

75. The imager of claim 73, wherein said first conductivity type is n-type, and said second conductivity type is p-type.

76. The imager of claim 73, wherein each pixel sensor cell further comprises a transfer gate located between said photosensor and said floating diffusion region.

77. The imager of claim 76, wherein said photosensor is a photogate sensor.

78. The imager of claim 76, wherein said photosensor is a photodiode sensor.

79. The imager of claim 76, wherein said photosensor is a photoconductor sensor.

80. A method of forming photosensors for an imaging device, said method comprising the steps of:

forming a first, second and third doped regions of a first conductivity type in a substrate, wherein said first, second and third doped regions are formed at substantially different depths in said substrate;

forming a first photosensor for sensing charges of red color wavelength at an upper surface of said first doped region;

forming a second photosensor for sensing charges of blue color wavelength at an upper surface of said second doped region; and

forming a third photosensor for sensing charges of green color wavelength at an upper surface of said third doped region.

81. The method of claim 80, wherein said step of forming said first doped region further comprises forming a deep retrograde well located at a first depth in said substrate.

82. The method of claim 81, wherein said step of forming said second doped region further comprises forming a shallow well located at a second depth in said substrate.

83. The method of claim 82, wherein said step of forming said third doped region further comprises forming a shallow retrograde well located at a third depth in said substrate.

84. The method of claim 83, wherein said first depth is substantially greater than said second and third depth.

85. The method of claim 84, wherein said third depth is substantially greater than said second depth.

86. The method of claim 80, wherein said first, second and third doped regions are formed sequentially.

87. The method of claim 80, wherein said first, second and third doped regions are formed simultaneously.

88. The method of claim 80, wherein said first conductivity type is p-type.

89. The method of claim 80, wherein said first conductivity type is n-type.

90. A method of forming a color pixel cell for an imaging device, said method comprising the steps of:

forming at least three multiple graded wells of a first conductivity type in a substrate, said at least three multiple graded wells being formed at substantially different depths in said substrate;

forming a photosensitive region in each of said at least three multiple graded wells;

forming a photosensor on an upper surface of said photosensitive region for receiving charges of a particular color wavelength; and

forming a floating diffusion region of a second conductivity type in each one of said at least three multiple graded wells for receiving charges transferred from said photosensitive region in the same well.

91. The method of claim 90, wherein one of said at least three multiple graded wells is a deep retrograde well formed at a first depth in said substrate.

92. The method of claim 91, wherein one of said at least three multiple graded wells is a shallow well formed at a second depth in said substrate.

93. The method of claim 92, wherein one of said at least three multiple graded wells is a shallow retrograde well formed at a third depth in said substrate.

94. The method of claim 90, wherein said first conductivity type is p-type, and said second conductivity type is n-type.

95. The method of claim 90, wherein said at least three multiple graded wells are formed sequentially.

96. The method of claim 90, wherein said at least three multiple graded wells are formed simultaneously.

97. The method of claim 90, wherein said first conductivity type is n-type, and said second conductivity type is p-type.

98. The method of claim 90, wherein said photosensor is a photodiode sensor.

99. The method of claim 90, wherein said photosensor is a photoconductor sensor.

100. The method of claim 90, further comprising the step of forming a transfer gate on each of said at least three multiple graded wells, between said photosensor and said floating diffusion region.

101. The method of claim 100, wherein said photosensor is a photogate sensor.

102. The method of claim 90 further comprising the step of forming a reset transistor in each of said at least three multiple graded wells for periodically resetting a charge level of said floating diffusion region, said floating diffusion region being the source of said reset transistor.

103. A method of forming a pixel array for an imaging device, said method comprising the steps of:

forming at least two graded wells of a first conductivity type in a substrate, said at least two graded wells being formed at substantially different depths in said substrate; and

respectively forming at least two pixel sensor cells in said at least two graded wells, wherein each pixel sensor cell has a photosensitive region, a photosensor formed on said photosensitive region for sensing charges of a particular color wavelength, and a floating diffusion region of a second conductivity type.

104. The method of claim 103, wherein said step of forming said at least two graded wells further comprises forming a deep retrograde well at a first depth in said substrate.

105. The method of claim 104, wherein said step of forming said at least two graded wells further comprises forming a shallow well of a second depth in said substrate.

106. The method of claim 105, wherein said step of forming said at least two graded wells further comprises forming a shallow retrograde well of a third depth in said substrate.

107. The method of claim 106, wherein said first depth is substantially greater than said second and third depths.

108. The method of claim 107, wherein said third depth is substantially greater than said second depth.

109. The method of claim 103, wherein said first conductivity type is p-type, and said second conductivity type is n-type.

110. The method of claim 103, wherein said at least two graded wells are formed sequentially.

111. The method of claim 103, wherein said at least two graded wells are formed simultaneously.

112. The method of claim 103, wherein said first conductivity type is n-type, and said second conductivity type is p-type.

113. A color pixel cell for an imaging device, said color pixel cell comprising:

at least two doped regions of a first conductivity type formed in a substrate, said at least two doped regions having substantially different depths in said substrate;

at least two photosensitive regions respectively formed in said at least two doped regions for respectively receiving photocharges corresponding to a particular color wavelength; and

at least two floating diffusion regions of a second conductivity type formed in said respective at least two doped regions for receiving said respective phtocharges transferred from said respective at least two photosensitive regions.

114. The color pixel cell of claim 113, wherein each of said at least two doped regions, of said at least two photosensitive regions and of said at least two floating diffusion regions correspond to a particular color sensor cell of said imaging device.

115. The color pixel cell of claim 113, wherein said first conductivity type is p-type, and said second conductivity type is n-type.

116. The color pixel cell of claim 113, wherein said first conductivity type is n-type, and said second conductivity type is p-type.

117. The color pixel cell of claim 113, wherein one of said at least two doped regions is a deep retrograde well.

118. The color pixel cell of claim 113, wherein one of said at least two doped regions is a shallow well.

119. The color pixel cell of claim 113, wherein one of said at least two doped regions is a shallow retrograde well.

120. The color pixel cell of claim 113, wherein each of said respective at least two photosensitive regions further comprises a respective photosensor for controlling the collection of charges in said photosensitive region.

121. The color pixel cell of claim 120, wherein each of said photosensor is a photodiode sensor.

122. The color pixel cell of claim 120, wherein each of said photosensor is a photogate sensor.

123. The color pixel cell of clam **120**, wherein each of said photosensor is a photoconductor sensor.

* * * * *