UNITED STATES PATENT AND TRADEMARK OFFICE

BEFORE THE PATENT TRIAL AND APPEAL BOARD

SAMSUNG ELECTRONICS CO., LTD.,
Petitioner

v.

GREENTHREAD LLC,
Patent Owner

Case: IPR2020-00289
Patent No. 8,421,195

PATENT OWNER PRELIMINARY RESPONSE UNDER 35 U.S.C. § 313 AND 37 C.F.R. §42.107

TABLE OF CONTENTS

I. INTRODUCTION 1

II. BACKGROUND 2

III. PERSON OF ORDINARY SKILL IN THE ART 3

IV. THE BOARD SHOULD DECLINE TO INSTITUTE *INTER PARTES* REVIEW UNDER 35 U.S.C. § 314(a).....4

A. The Arguments Set Forth in the Petition and in Samsung's Invalidity Contentions in District Court Are the Same, and Are Based on the Same Prior Art References, Payne and Wieczorek. 4

B. The District Court Case Is Far Along and Will Proceed to Trial Several Months Before a Final Written Decision Would Issue. 13

C. Efficiency Considerations Justify Denial of Institution. 14

D. Petitioner's Remaining Arguments Regarding § 314(a) Do Not Justify Institution. 16

1. Petitioner Asserted the Same Prior Art in the District Court. ..17

2. Petitioner's Decision to Rely on a Different Expert in the District Court Proceeding Is Irrelevant. 17

3. Petitioner's Argument that the Speed of the District Court Litigation Weighs Against a Discretionary Denial Is Unsupported. 18

V. THE BOARD SHOULD DECLINE TO INSTITUTE *INTER PARTES* REVIEW UNDER 35 U.S.C. § 325(d) 20

A. The Examiner Twice Rejected Claims as Anticipated by Rhodes. 22

B. *Advanced Bionics* Framework, Part 1 Supports Denial of Institution Because Payne and Wieczorek are Substantially the Same as Rhodes. 25

1. It Is Indisputable that Rhodes's Disclosures Relating to Limitations [1.0]-[1.3] Are Substantially the Same as Those of Payne and Wieczorek. 27

2. Rhodes's Disclosure of Multiple-Implant Wells Is Substantially the Same as Those of Payne and Wieczorek. 31

C. *Advanced Bionics* Framework, Part 2 Supports Denial of Institution. 41

VI. CLAIM CONSTRUCTION 44

A. The Specification's Use of "Well Region" and "Well." 46

B. The Prosecution History Regarding "Well Region." 48

C. Contemporaneous References Confirm that Petitioner's Usage of "Well Region" Is Incorrect. 50

VII. PETITIONER FAILS TO ESTABLISH A REASONABLE LIKELIHOOD THAT THE APPLIED REFERENCES RENDER THE CHALLENGED CLAIMS UNPATENTABLE.....55

A. Petitioner Does Not Establish a Reasonable Likelihood that Payne Anticipates Claim 1 or 2 (Ground 1a) or Renders Obvious Claim 1 or 2 (Ground 1b). 56

1. Overview of Payne.....57

2. Payne Does Not Disclose Both the Recited "single drift layer disposed between the other surface of said surface layer and said substrate" and the "at least one well region disposed in said single drift layer" of Claim 1. 59

3. Petitioner Fails to Demonstrate that Payne Discloses the Recited "First" and "Second" "Static Unidirectional Electric Drift Field[s] to Aid the Movement of Minority Carriers from Said Surface Layer to Said Substrate." 68

4. Petitioner Fails to Establish a Reasonable Likelihood that Payne Anticipates or Renders Obvious Claim 2. 70

B. Petitioner Does Not Establish a Reasonable Likelihood that Wieczorek Anticipates Claim 1 or 2 (Ground 2a) or Renders Obvious Claim 1 or 2 (Ground 2b). 71

1. Overview of Wieczorek 71

2. Wieczorek Does Not Disclose Both the Recited "single drift layer disposed between the other surface of said surface layer and said substrate" and the "at least one well region disposed in said single drift layer." 72

3. Petitioner Fails to Establish a Reasonable Likelihood that Wieczorek Anticipates or Renders Obvious Claim 2. 81

VIII. CONCLUSION.....81

TABLE OF AUTHORITIES

Page(s)

Cases

Advanced Bionics, LLC v. Med-el Elektromedizinische Geräte Gmbh,
IPR2019-01469, Paper 6 (P.T.A.B. Feb. 13, 2020) 21, 25, 26, 41, 42, 43

Becton, Dickinson & Co. v. B. Braun Melsungen AG,
IPR2017-01586, Paper 8 (P.T.A.B. Dec. 15, 2017)..... 21, 25, 26, 27, 41, 43, 44

E-One, Inc. v. Oshkosh Corp.,
IPR2019-00161, Paper 16 (P.T.A.B. May 15, 2019).....15

Ex parte Levy,
17 U.S.P.Q. 2d 1461 (B.P.A.I. 1990).....68

General Plastic Industrial Co., Ltd. v. Canon Kabushiki Kaisha,
IPR2016-01357, Paper 19 (P.T.A.B. Sept. 6, 2017) 4, 18, 19

Hockerson-Halberstadt, Inc. v. Avia Group International, Inc.,
222 F.3d 951 (Fed. Cir. 2000).....70

NHK Spring Co. v. Intri-Plex Technologies, Inc.,
IPR2018-00752, Paper 8 (P.T.A.B. Sept. 12, 2018) 4, 15, 16, 18, 19

Regeneron Pharm., Inc. v. Merus N.V.,
864 F.3d 1343 (Fed. Cir. 2017).....26

Roku, Inc. v. Universal Electronics, Inc.,
IPR2019-01619, Paper 11 (P.T.A.B. Apr. 2, 2020) 26, 43, 44

Samsung Electronics Am., Inc. v. Uniloc 2017 LLC,
IPR2019-01218, Paper 7 (P.T.A.B. Jan. 7, 2020)..... 15, 16, 18, 19

TC Heartland LLC v. Kraft Foods Grp. Brands LLC,
137 S. Ct. 1514 (2017) 20

Unified Patents Inc. v. Korea Advanced Institute of Science,
IPR2019-01071, Paper 11 (P.T.A.B. Oct. 3, 2019).....43

Statutes

35 U.S.C. § 314(a) 1, 4, 15, 16, 18, 20

35 U.S.C. § 325(d) 1, 17, 20, 42, 44

37 C.F.R. § 42.107 1

37 C.F.R. § 42.108(c).....1

Other Authorities

H.R. Rep. No. 112-98, pt. 1 (2011).....19

USPTO Trial Practice Guide Update (Aug. 2018) 19

LIST OF PATENT OWNER'S EXHIBITS

Exhibit No.	Description
EX-2001	Exhibit 1 to Appendix C of Samsung Electronics Co., Ltd.'s Invalidity Contentions regarding Payne
EX-2002	Exhibit 3 to Appendix C of Samsung Electronics Co., Ltd.'s Invalidity Contentions regarding Wieczorek
EX-2003	Docket Control Order, *Greenthread, LLC v. Samsung Electronics Co., Ltd., et al.,* Case No. 2:19-CV-147-JRG, Dkt. 24 (Nov. 1, 2019)
EX-2004	Unopposed Motion for Extension of Time to Move, Answer, or Otherwise Respond to Plaintiff's Complaint and Waiver of Foreign Service Requirement, *Greenthread, LLC v. Samsung Electronics Co., Ltd., et al.,* Case No. 2:19-CV-147-JRG, Dkt. 5 (May 30, 2019)
EX-2005	Order, *Greenthread, LLC v. Samsung Electronics Co., Ltd., et al.,* Case No. 2:19-CV-147-JRG, Dkt. 7 (Aug. 20, 2019)
EX-2006	Joint Motion to Amend Docket Control Order, *Greenthread, LLC v. Samsung Electronics Co., Ltd., et al.,* Case No. 2:19-CV-147-JRG, Dkt. 22 (Oct. 30, 2019)
EX-2007	Minutes for Markman Hearing Held Via Video Conference Before U.S. District Judge Rodney Gilstrap, *Greenthread, LLC v. Samsung Electronics Co., Ltd., et al.,* Case No. 2:19-CV-147-JRG, Dkt. 61 (Apr. 2, 2020)
EX-2008	Amended Docket Control Order, *Greenthread, LLC v. Samsung Electronics Co., Ltd., et al.,* Case No. 2:19-CV-147-JRG, Dkt. 58 (Mar. 25, 2020)
EX-2009	Complaint for Patent Infringement, *Greenthread, LLC v. Samsung Electronics Co., Ltd., et al.,* Case No. 2:19-CV-147-JRG, Dkt. 1 (Apr. 30, 2019)
EX-2010	Samsung Press Release, "Samsung Electronics America to Open Flagship North Texas Campus," dated Apr. 6, 2018 (located at https://news.samsung.com/us/samsung-electronics-america-open-flagship-north-texas-campus/)

EX-2011	U.S. Patent Application Publication No. 2003/0042511 ("Rhodes")
EX-2012	Excerpts from Wolf, S., *Silicon Processing for the VLSI Era, Vol. 4 – Deep-Submicron Process Technology* (2002) ("Wolf Vol. 4")
EX-2013	Declaration of Alexander D. Glew ("Glew Dec.")

I. INTRODUCTION

Pursuant to 37 C.F.R. § 42.107, Patent Owner Greenthread LLC ("Greenthread") submits this Preliminary Response to the Petition for *Inter Partes* Review ("IPR") of U.S. Patent 8,421,195 (the "'195 Patent"). Paper 2 ("Petition"). Petitioner Samsung Electronics Co., Ltd. ("Petitioner") challenges the validity of Claims 1 and 2 of the '195 Patent.

Petitioner advances the same arguments, based on the same art, that it has raised in a parallel proceeding in the Eastern District of Texas—a matter set for trial in November 2020, more than *seven months* before the July 14, 2021 deadline for a Final Written Decision on this Petition. Due to overlap of issues and the advanced stage of the District Court proceeding, institution of this *inter partes* review would be a waste of resources for the Board, the District Court, and the parties. The Board should exercise its discretion under 35 U.S.C. § 314(a) and deny institution, consistent with recent Board precedent. The references upon which Petitioner relies, Payne and Wieczorek, are also substantially the same as, and cumulative of, the Rhodes reference overcome during prosecution. The Board should therefore also deny institution under 35 U.S.C. § 325(d).

Petitioner has also failed to meet its burden under 37 C.F.R. § 42.108(c) of establishing a reasonable likelihood of success that either of Claims 1 and 2 would be unpatentable based on its challenge. For both references upon which it relies,

Petitioner's entire argument is based on an unstated, implied construction of the term "well region" that is demonstrably incorrect. Accordingly, Patent Owner requests that the Board deny institution of *inter partes* review.

II. BACKGROUND

The '195 patent is directed to a new and improved semiconductor device wherein graded dopant concentrations are used to create unidirectional electric fields to aid the movement of unwanted minority carriers from the surface layer of the device to the substrate. EX-1001, 3:30-33. These spurious, unwanted minority carriers, which can be generated by clock switching in logic and memory devices, can negatively affect performance of semiconductor devices, including DRAM, NAND flash, and image sensors. *Id.*, 3:14-27. For example, minority carriers can cause "[d]egradation of refresh time in DRAM's" and "degradation of CMOS digital images." *Id.* Use of the claimed graded dopant concentrations can, *e.g.*, enhance frequency of operation of logic and other semiconductor devices, improve refresh time in DRAM devices, improve programming time in nonvolatile memory devices, and improve pixel resolution and color sensitivity in image sensor devices. *Id.*, Abstract, 3:14-22; EX-2013 (Declaration of Alexander D. Glew ("Glew Dec."), ¶ 31.

The '195 patent has 14 claims. Petitioner challenges only Claims 1 and 2. Claim 2 depends from on Claim 1. Claim 1 is as follows:

1. A CMOS Semiconductor device comprising:

a surface layer;

a substrate;

an active region including a source and a drain, disposed on one surface of said surface layer;

a single drift layer disposed between the other surface of said surface layer and said substrate, said drift layer having a graded concentration of dopants extending between said surface layer and said substrate, said drift layer further having a first static unidirectional electric drift field to aid the movement of minority carriers from said surface layer to said substrate; and

at least one well region disposed in said single drift layer, said well region having a graded concentration of dopants and a second static unidirectional electric drift field to aid the movement of minority carriers from said surface layer to said substrate.

EX-1001, 4:13-29.

III. PERSON OF ORDINARY SKILL IN THE ART

For the purposes of these preliminary proceedings, the Patent Owner does not dispute the level of skill for a person of ordinary skill in the art ("POSITA"). Patent Owner does not waive, however, any argument regarding the proper level of skill for a POSITA, and further reserves the right to advance additional or modified

arguments at a later date.

IV. THE BOARD SHOULD DECLINE TO INSTITUTE *INTER PARTES* REVIEW UNDER 35 U.S.C. § 314(a)

The Board should exercise its discretion under 35 U.S.C. § 314(a) and deny institution. The District Court case is scheduled for trial on November 2, 2020. The Board will not issue a Final Written Decision until seven months after the District Court trial. As discussed below, Petitioner has asserted in its invalidity contentions in the District Court case the very *same arguments* as to the *same prior art references* it asserts in its Petition, Payne (EX-1005) and Wieczorek (EX-1006). Parallel proceedings addressing the same arguments and prior art would be duplicative and inefficient. "Institution of an *inter partes* review under these circumstances would not be consistent with 'an objective of the AIA . . . to provide an effective and efficient alternative to district court litigation.'" *NHK Spring Co. v. Intri-Plex Technologies, Inc.*, IPR2018-00752, Paper 8, at 20 (P.T.A.B. Sept. 12, 2018) (quoting *General Plastic Industrial Co., Ltd. v. Canon Kabushiki Kaisha*, IPR2016-01357, Paper 19, at 16-17 (P.T.A.B. Sept. 6, 2017)).

A. The Arguments Set Forth in the Petition and in Samsung's Invalidity Contentions in District Court Are the Same, and Are Based on the Same Prior Art References, Payne and Wieczorek.

Samsung's invalidity contentions in the District Court case contain claim charts setting forth in detail Samsung's positions regarding both Payne and

Wieczorek—the same references relied upon in the Petition. *See* EX-2001 (regarding Payne), EX-2002 (regarding Wieczorek). Samsung's invalidity contentions put forward the same arguments as the Petition, as illustrated below on a limitation-by-limitation basis for Payne. Patent Owner also identifies citations for each limitation confirming that the District Court and Petition arguments regarding Wieczorek are also the same.

[1.0] A CMOS Semiconductor device comprising:

In its Petition and invalidity contentions, Samsung argues that Payne discloses a CMOS semiconductor device. *See* Petition, 12; EX-2001, 2. Regarding Wieczorek, *see* Petition, 66-67; EX-2002, 2-5.

[1.1] a surface layer;

In its Petition and invalidity contentions, Samsung identifies the same purported "surface layer":

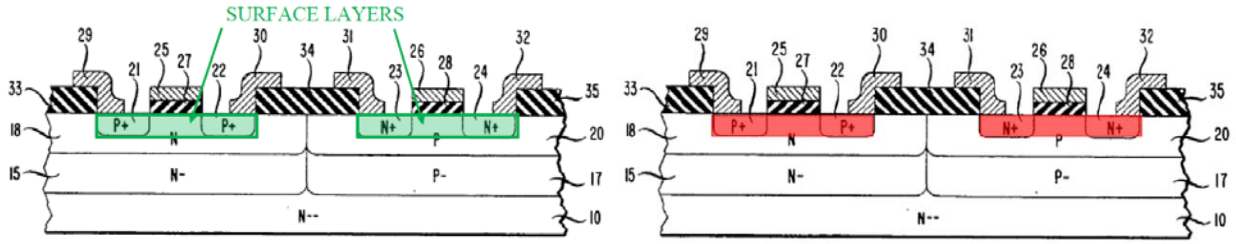

Payne, FIG. 10

Petition, 16 (left); EX-2001, 3 (right) (citing Payne Fig. 10).

Samsung's invalidity contentions also set forth the alternative argument Petitioner calls "Mapping Two":

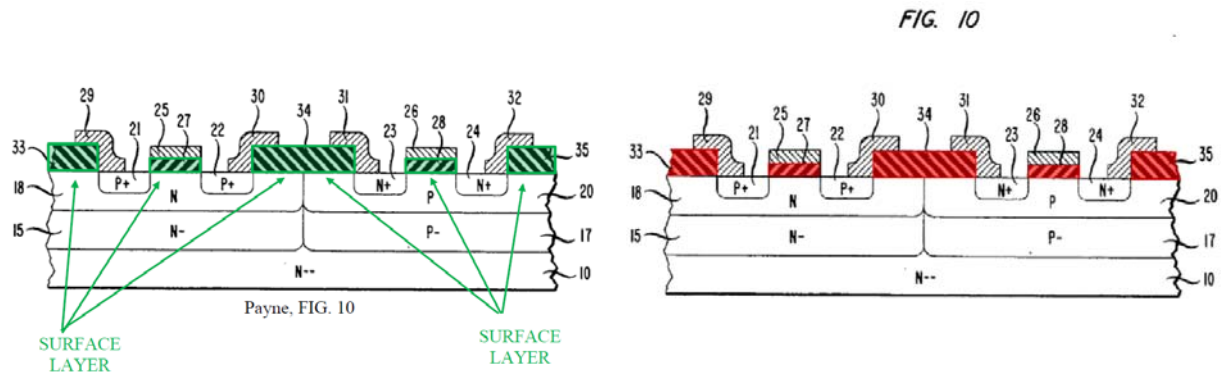

Petition, 39 (left); EX-2001, 6 (right) (citing Payne Fig. 10). Regarding Wieczorek, *see* Petition, 65, 68, 76 n.6 (arguing in the alternative that "the surface layer corresponds [sic] a combination of the channel layer 350 and the diffusion barrier layer 351"); EX-2002, 9-10.

[1.2] a substrate;

In its Petition and invalidity contentions, Samsung identifies the same purported "substrate":

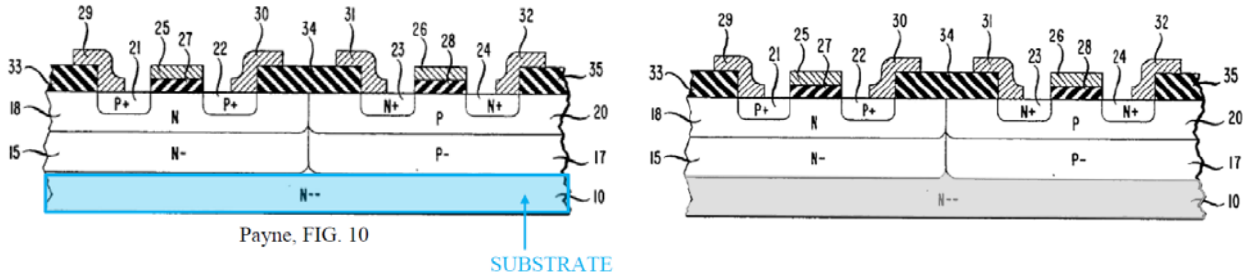

Petition, 18 (left); EX-2001, 8 (right) (citing Payne Fig. 10). Regarding Wieczorek, *see* Petition, 69-70; EX-2002, 12.

[1.3] an active region including a source and a drain, disposed on one surface of said surface layer;

In its Petition and invalidity contentions, Samsung identifies the same purported active region:

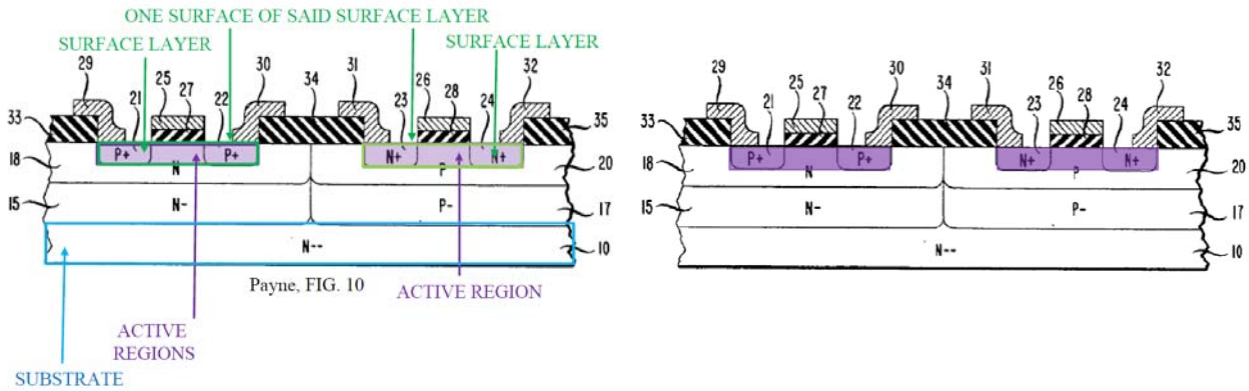

Petition, 20 (left); EX-2001, 9 (right) (citing Payne Fig. 10). Regarding Wieczorek, *see* Petition, 71; EX-2002, 20.

[1.4] a single drift layer disposed between the other surface of said surface layer and said substrate,

In its Petition and invalidity contentions, Samsung identifies the same purported "single drift layer" (with inverted color schemes):

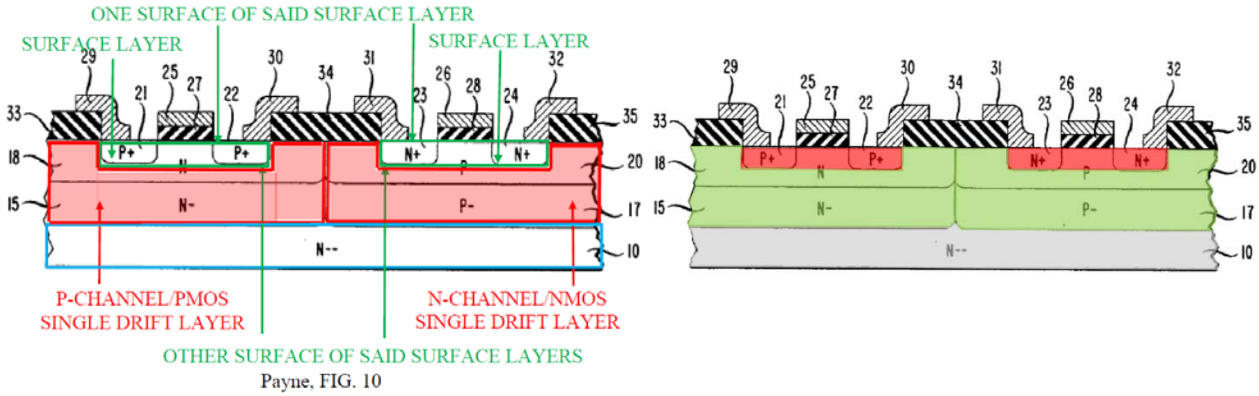

Petition, 21 (left); EX-2001, 13 (right) (citing Payne Fig. 10). Regarding Wieczorek, *see* Petition, 72; EX-2002, 27.

[1.5] said drift layer having a graded concentration of dopants extending between said surface layer and said substrate,

In its Petition and invalidity contentions, Samsung identifies the same "graded concentration of dopants," relying on Payne Figure 11:

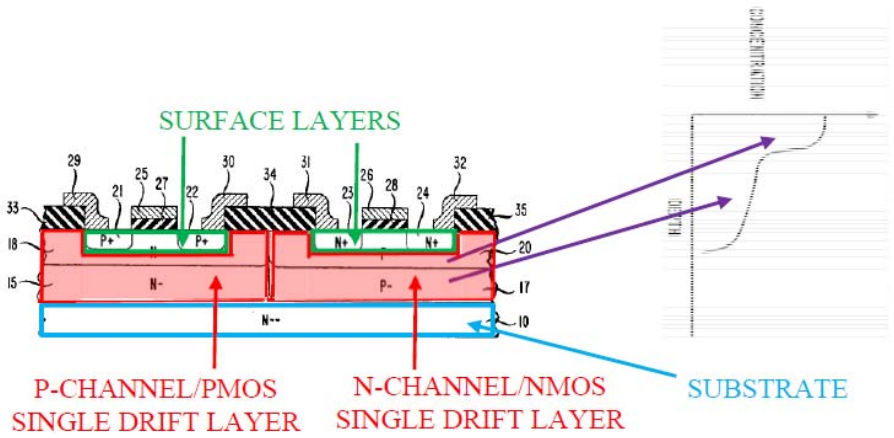

Petition, 25. Regarding Wieczorek, *see* Petition, 73.

FIG. 11

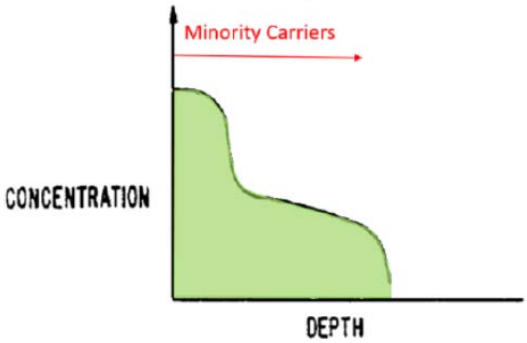

EX-2001, 19 (citing Payne Fig. 11). Regarding Wieczorek, *see* EX-2002, 27, 30-32.

[1.6] said drift layer further having a first static unidirectional electric drift field to aid the movement of minority carriers from said surface layer to said substrate; and

In its Petition and invalidity contentions, Samsung identifies the same purported "first static unidirectional electric drift field to aid the movement of minority carriers from said surface layer to said substrate," *i.e.*, either "A" or "B" shown in Figure 11 below:

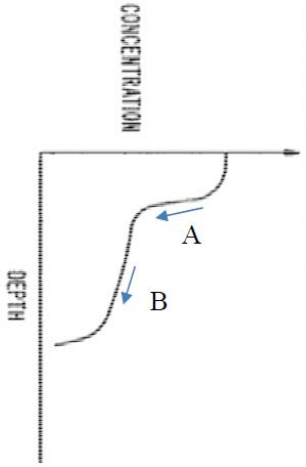

Payne, FIG. 11 (rotated 90º clockwise)

Petition, 28. Regarding Wieczorek, *see* Petition, 77.

In its invalidity contentions, like the Petition, Samsung relies on applicant's statements during prosecution that "a graded dopant concentration <u>itself</u> creates a 'built-in' electrical field that forces the movement of carrier [sic] into a particular direction, whereby the 'direction' of the electrical field and the resulting direction of the carrier movement depends solely on the slope of the graded concertation [sic] of dopant." EX-2001, 19-20 (citations omitted); Petition, 5, 26. Regarding Wieczorek, *see* EX-2002, 32; Petition, 75. Samsung's invalidity contentions state that "the downward sloping curve disclosed by Payne '971 creates a first static

unidirectional electric drift field to aid the movement of minority carriers from said surface layer to said substrate." EX-2001, 20. Regarding Wieczorek, *see* EX-2002, 32. Samsung's arguments regarding this limitation are thus the same in the Petition and invalidity contentions.

Similarly, in both its Petition and invalidity contentions, Samsung argues that if Payne does not disclose this limitation, it would have been obvious to a POSITA. EX-2001, 24 ("It would have been obvious to one of ordinary skill in the art at the time of the alleged invention to include such functionality and/or structure in the system disclosed in Payne[.]"); Petition at 30 ("[B]ecause (a) it was well-known in the art that a graded dopant concentration creates an electric drift field (as explained above in the anticipation discussion of feature [1.6] and acknowledged by the Patent Owner) and (b) Payne's FIG. 11 shows different grades of dopant concentration, it would have been obvious to a POSITA that the graded dopant concentration across the second tub region 17 and portions of the P type surface region 20 (or the first tub region 15 and portions of the N type surface region 18) creates at least two unidirectional electric drift fields.") (citing EX-1003, ¶ [98]).

[1.7] at least one well region disposed in said single drift layer, said well region having a graded concentration of dopants and a second static unidirectional electric drift field to aid the movement of minority carriers from said surface layer to said substrate.

In both its Petition and invalidity contentions, Samsung contends that each of regions 17 and 20 (for the P-tub) and 15 and 18 (for the N-tub) are "well regions" satisfying this limitation. Petition, 33 ("Payne's single drift layers include at least the P- type second tub region 17, portions of the P type surface region 20, the N- type first tub region 15, and portions of the N type surface region 18, which are each well regions."); EX-2001, 26 ("Payne '971's regions 18 and 20 . . . are well regions disposed in said single drift layer. Alternatively, regions 15 and 17 are also well regions disposed in said single drift layer . . . .").

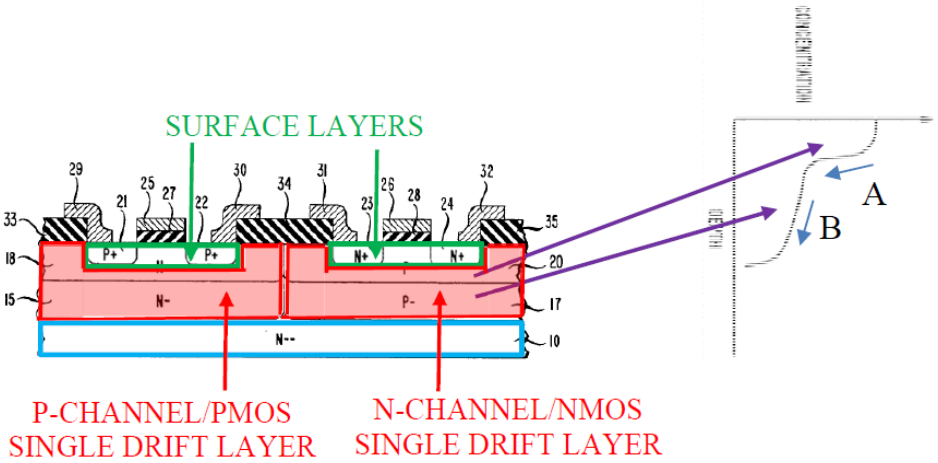

Payne, FIG. 10 (left), FIG. 11 (right – rotated 90º clockwise)

Petition, 34 (explaining that "A" in Figure 11 corresponds to the graded dopant concentration in surface regions 20 and 18, and "B" corresponds to the lower concentrations in tub regions 17 and 15). Regarding Wieczorek, *see* Petition, 80-81.

Samsung identifies the same purported "well regions" in its invalidity contentions:

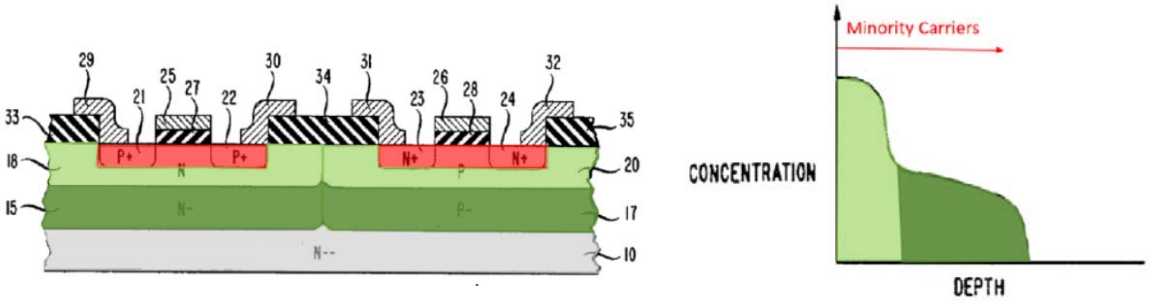

EX-2001, 24-25 ("Payne '971 discloses that the example drift layers described in [1.4/1.5] contain a well region (annotated in dark green [above]) disposed therein[.]"), 26 ("Payne '971's regions 18 and 20 . . . are well regions disposed in said single drift layer. Alternatively, regions 15 and 17 are also well regions disposed in said single drift layer . . . ."), 30-32. Regarding Wieczorek, *see* EX-2002, 42-48.

[2.0] The CMOS Semiconductor device of claim 1, wherein said drift layer is a deeply implanted layer.

In its Petition and invalidity contentions, Samsung argues that Payne discloses a deeply implanted drift layer. In each, Samsung cites the same material from Payne describing its ion implantation and thermal processes and the resulting depths of Payne's P-type and N-type tubs. *See* Petition, 36-37; EX-2001, 36-39. Regarding Wieczorek, *see* Petition, 83; EX-2002, 52-53, 56-57.

B. The District Court Case Is Far Along and Will Proceed to Trial Several Months Before a Final Written Decision Would Issue.

Greenthread filed suit in District Court on April 30, 2019, and on May 13, 2019, served the three U.S.-based Samsung defendants in that action. EX-2004, ¶¶ 1-2. Greenthread agreed to an extension until September 3, 2019 for the Samsung defendants to answer the complaint. *Id.*, ¶¶ 3-4.

The Samsung defendants filed their answer on September 3, 2019, and Greenthread served its infringement contentions on September 6, 2019. EX-2005, 2. The District Court issued a proposed Docket Control Order on October 16, 2019, and later granted a joint motion from the parties to move the trial date from October 5, 2020 to November 2, 2020. EX-2006, 6; EX-2003, 1. The Samsung defendants served their invalidity contentions on November 1, 2019. EX-2003, 5.

On December 23, 2019, almost eight months after Greenthread filed suit, Petitioner finally filed its *inter partes* review petition. The Petition raises the same prior art identified in Samsung's invalidity contentions nearly two months earlier. The Petition was accorded a filing date on January 14, 2020 (Paper 5), meaning an institution decision will issue by July 14, 2020. If *inter partes* review is instituted, a Final Written Decision will issue by July 14, 2021.

Meanwhile, the District Court case has progressed significantly—it is not "at an early phase" as Petitioner contends. Petition, 6. The deadline for substantial

completion of document production passed on February 19, 2020. EX-2003, 4. The parties argued claim construction before the District Court on April 2, 2020. EX-2007, 1. Fact discovery will close on June 18, 2020, expert discovery closes on July 22, 2020, dispositive motions are due July 29, 2020, and responses to dispositive motions are due August 13, 2020. EX-2008, 3. The District Court case will be at a very advanced stage, even by the time the Board issues its institution decision in July 2020. If the Board institutes *inter partes* review, the Patent Owner Response would be due October 14, 2020—less than three weeks before the District Court trial begins. A Final Written Decision would issue in July 2021, more than seven months after the November 2020 District Court trial.

C. Efficiency Considerations Justify Denial of Institution.

The District Court case is set for trial on November 2, 2020. EX-2008, 1. Based on Samsung's invalidity contentions, as discussed in detail above in section IV.A, the trial in the District Court case will address every one of the issues raised in the Petition. Addressing these overlapping invalidity arguments at the same time, in two different proceedings, would be inefficient and a waste of the Board's, the District Court's, and the parties' resources.

The Board has denied institution in cases when proceeding with the *inter partes* review in parallel with district court litigation would be an inefficient use of the Board's resources. *See, e.g.*, *Samsung Electronics Am., Inc. v. Uniloc 2017*

LLC, IPR2019-01218, Paper 7, at 9-10 (P.T.A.B. Jan. 7, 2020); *E-One, Inc. v. Oshkosh Corp.*, IPR2019-00161, Paper 16, at 6-7 (P.T.A.B. May 15, 2019); *NHK Spring Co.*, IPR2018-00752, Paper 8, at 19-20. For example, in *E-One*, the Board characterized the import of the Board's precedential decision in *NHK Spring*:

> [T]he Board noted that a district court proceeding involving the same patent was scheduled to go to trial before a final decision would have been due in the Board proceeding, and the Board proceeding would involve the same claim construction standard, the same prior art references, and the same arguments as in the district court.

E-One, Inc., IPR2019-00161, Paper 16, at 6 (citing *NHK Spring,* IPR2018-00752, Paper 8, at 19). In *NHK Spring*, the Board noted that the district court trial would conclude six months before the PTAB trial, and that several major litigation deadlines had passed. *NHK Spring Co.*, IPR2018-00752, Paper 8, at 20. Given these facts, the Board found that "the advanced state of the district court proceeding [was] an additional factor that weigh[ed] in favor of denying the Petition[.]" *Id.* Based on the overlapping issues and the six-month period between the district court trial and the trial before the Board, the Board agreed that it would be an inefficient use of resources to institute *inter partes* review. *Id.* ("Patent Owner asserts that such inefficiency supports denying the Petition. We agree.").

In *Samsung Electronics*, the Board followed the same reasoning it applied in *NHK Spring* and denied institution under § 314(a). The Board concluded there was no significant distinction between the timing of the proceedings in the *Samsung*

Electronics matter and the facts in *NHK Spring*—notably both IPR proceedings would go to trial at least six months after a district court trial concluded. *Samsung Elecs.*, IPR2019-01218, Paper 7, at 9-10. In addition, it was undisputed that the same grounds proposed in the petition were included in the invalidity contentions served in the district court case. *Id*. at 10. The Board therefore exercised its discretion under § 314(a) and denied institution. *Id.*

The present timeline and other circumstances are nearly identical to those in *NHK Spring* and *Samsung Electronics*. There is an eight-month gap between the District Court trial date of November 2, 2020 and the July 14, 2021 deadline for the Board's Final Written Decision. The parties argued claim construction before the District Court on April 2, 2020. EX-2007, 1. The District Court applies the same standard for claim construction as the Board. Numerous other case deadlines have passed, and many more—including the June 18, 2020 fact discovery and expert report deadlines (EX-2008, 3)—will have passed by the time the Board issues its institution decision. And as discussed above, there is complete overlap of invalidity arguments and issues between the Petition and the District Court case.

D. Petitioner's Remaining Arguments Regarding § 314(a) Do Not Justify Institution.

Petitioner offers several arguments as to why denial of institution under § 314(a) is unwarranted. None justifies institution of *inter partes* review.

1. Petitioner Asserted the Same Prior Art in the District Court.

Petitioner asserts it "has not previously challenged any related patents based on the references relied upon in [its] petition, and the applied references were not relied upon (or even cited) during prosecution of the '195 patent." Petition, 6. As discussed in detail above in section IV.A, in District Court, Petitioner has challenged the '195 patent based on the very same references relied upon in its Petition, Payne and Wieczorek. Further, as discussed in section V.B below, Payne and Wieczorek are cumulative of the prior art addressed during prosecution of the '195 patent, and denial of institution is also appropriate under 35 U.S.C. § 325(d).

2. Petitioner's Decision to Rely on a Different Expert in the District Court Proceeding Is Irrelevant.

Petitioner argues that because "another expert, not Dr. Smith, will be the expert for Samsung in the co-pending district court proceeding," there is "significant evidence not of record in the district court proceeding." Petition, 6. Petitioner's use of different experts in the two fora is not a legitimate basis to institute *inter partes* review. Petitioner identifies no material distinctions between each expert's analysis. Nothing prevents Samsung from offering testimony from Dr. Smith in District Court. Allowing a petitioner to obtain *inter partes* review by simply changing experts and not providing any new substance promotes the very

inefficiencies Congress intended *inter partes* review to alleviate. *See General Plastic*, IPR2016-01357, Paper 19, at 16-17.

3. Petitioner's Argument that the Speed of the District Court Litigation Weighs Against a Discretionary Denial Is Unsupported.

Petitioner contends that "due to the quick pace of proceedings" in the District Court, "time did not permit Petitioner to file a petition in time for the Final Written Decision to be rendered before the scheduled trial date" because of "Patent Owner's strategic forum selection, not conduct of Petitioner." Petition, 7. Petitioner's assertions are incorrect for three reasons.

First, the Board has expressly rejected arguments—*including Samsung's arguments*—that a petition is shielded from 314(a) discretionary denial merely because it was timely filed. In *Samsung Electronics*, the petitioner argued "that it filed its Petition promptly and the district court proceeding is in its early stages." *Samsung Elecs.*, IPR2019-01218, Paper 7, at 9. The Board rejected this argument because the petitioner should have tried to "distinguish persuasively the facts here from the facts in [the Board's] precedential decision *NHK Spring*" and failed to "identify a significant distinction between the timing of the district court proceeding . . . and the facts in *NHK Spring*." *Id.* Petitioner raises an identical

argument here.[1] Petitioner also does not (and cannot) distinguish the timeline in the present action from the one in *NHK Spring*. Because of the case schedule in District Court, and Samsung's identical arguments in each forum, the efficient path for adjudication is in the District Court.

Second, Petitioner's argument defies the congressional intent behind *inter partes* review. *Inter partes* review's objective "is to provide an effective and efficient alternative to district court litigation." *General Plastic*, IPR2016-01357, Paper 19, at 16-17 (referencing the legislative history of the AIA); *see also* USPTO Trial Practice Guide Update (Aug. 2018), at 9 ("The AIA was 'designed to establish a more efficient and streamlined patent system that will improve patent quality and *limit unnecessary and counterproductive litigation costs*.'") (quoting H.R. Rep. No. 112-98, pt. 1, at 30 (2011)) (emphasis added). Petitioner's arguments turn this congressional intent on its head. The District Court's efficient schedule counsels *against* institution. Patent Owner should not have to expend the resources litigating validity through jury trial, while simultaneously litigating the same issues here. A subsequent decision by the Board does nothing to assist the

[1] The Petition was filed two weeks before the Board's express rejection of these arguments in *Samsung Electronics*.

District Court, and worse, raises the potential for conflicting results, which would result in "unnecessary and counterproductive litigation costs." *Id.*

Finally, Petitioner's concerns about Patent Owner's "strategic forum selection" are unfounded and unsupported. The Supreme Court's decision in *TC Heartland* effectively limited Plaintiffs to filing lawsuits in a district where the defendant is incorporated or has a regular and established place of business. *TC Heartland LLC v. Kraft Foods Grp. Brands LLC*, 137 S. Ct. 1514 (2017). Samsung has a regular and established place of business in the Eastern District of Texas. *See* EX-2009, ¶ 7. Indeed, Samsung has advertised its "flagship" presence there. EX-2010, 1. Thus, Patent Owner did not "strategic[ally]" select its forum—Samsung established its business there.

In view of the foregoing, the Board should exercise its discretion and deny institution under 35 U.S.C. § 314(a).

V. THE BOARD SHOULD DECLINE TO INSTITUTE *INTER PARTES* REVIEW UNDER 35 U.S.C. § 325(d)

The Board should decline to institute *inter partes* review under 35 U.S.C. § 325(d) under the *Advanced Bionics* framework, which built on the *Becton, Dickinson* factors. The Board applies a two-part framework in considering whether to exercise discretion to deny institution under § 325(d), *i.e.*, (1) "whether the same or substantially the same art previously was presented to the Office or whether the

same or substantially the same arguments previously were presented to the Office"; and (2) "if either condition of first part of the framework is satisfied, whether the petitioner has demonstrated that the Office erred in a manner material to the patentability of challenged claims." *Advanced Bionics, LLC v. Med-el Elektromedizinische Geräte Gmbh*, IPR2019-01469, Paper 6, at 8 (P.T.A.B. Feb. 13, 2020) (citing *Becton, Dickinson* factors); *see also Becton, Dickinson & Co. v. B. Braun Melsungen AG*, IPR2017-01586, Paper 8, at 17-18 (P.T.A.B. Dec. 15, 2017).

The prior art references relied upon in the Petition are substantially the same as prior art previously presented to the Examiner. Specifically, Payne (EX-1005) and Wieczorek (EX-1006) are substantially the same as, and cumulative of, another reference, Application Pub. No. US 2003/0042511 ("Rhodes") (EX-2011), which was the basis of two § 102 rejections during prosecution of the '195 patent. Rhodes does not anticipate the '195 patent for at least the same reasons that Payne and Wieczorek do not, as set forth in detail in sections VII.A and VII.B below, respectively.

Further, Petitioner does not demonstrate—or even contend—that the Examiner committed an error material to patentability. Rather than reflect an error by the Examiner, the issuance of the '195 patent reflects a rejection of the erroneous argument upon which the Petition is based, *i.e.*, that a single well formed

via two or more implants can satisfy both the "single drift layer" and "at least one well region disposed in said single drift layer" limitations of '195 Claim 1. If Petitioner's arguments regarding these limitations had merit, the Examiner would have rejected those claims as anticipated by Rhodes. The Board should decline to institute *inter partes* review based on art that is substantially the same as art overcome during prosecution.

A. The Examiner Twice Rejected Claims as Anticipated by Rhodes.

In original application claim 3, the patentee sought to claim, *inter alia*, "[a] semiconductor device with graded dopant concentration in the *well regions*, to aid carrier movement away from the active surface regions, towards the substrate." EX-1002 (Application), 356 (emphasis added). During prosecution, the Examiner rejected the claim as anticipated over Rhodes. The Examiner noted:

> Rhodes (refer to Figures 5-14) teaches a semiconductor device with graded dopant concentration (page 4, para 0046, 1st sentence) in the well regions (160, 170, 180) to aid carrier movement away from the active surface regions, towards the substrate (page 6, para 0061; page 4, para 0045 & 0049).

EX-1002 (07/28/2008 Office Action), 307. Rhodes was the basis for the Examiner's first two § 102 rejections during prosecution of the '195 patent. *Id.*; *see also id.* (01/06/2009 Office Action), 288-89.

The applicant amended the '195 claims a number of times following the second Rhodes-based rejection. New claims were added, including application

claim 10, which eventually issued as '195 Claim 1. *Id.* (05/14/2010 Request for Continued Examination, Am. A), 206. Instead of a "well region," application claim 10 included:

> [A] *drift layer* disposed between the other surface of said surface layer and said substrate, said drift layer having a graded concentration of dopants extending between said surface layer and said substrate to create a drift field drawing minority carries from said surface layer to said substrate.

Id. (emphasis added).

After this amendment, subsequent § 103 rejections were based on combinations with another reference, U.S. Pat. No. 4,160,985 ("Kamins") (EX-1007). *Id.* (08/04/2010 Office Action), 185-186; *Id.* (12/20/2011 Office Action), 95-97; *Id.* (08/13/2012 Office Action), 66-68. In response, application claim 10 was amended several times. *Id.* (10/12/2011 Request for Continued Examination, Am. D), 112; *Id.* (04/17/2012 Response Pursuant to 37 CFR 1.114, Am. E), 79. Finally, claim 10 was amended to, *inter alia*, add the separate "well region" limitation, in addition to the already claimed "single drift layer":

> [A]t least one well region disposed in said single drift layer, said well region having a graded concentration of dopants and a second static unidirectional electric drift field to aid the movement of minority carries from said surface layer to said substrate.

Id. (11/13/2012 Request for Continued Examination, Am. F), 38. The "at least one well region" *itself* has a graded concentration of dopants and a second electric field, in addition to the one in the single drift layer. EX-2013, ¶¶ 33-36.

In light of this amendment and the inclusion of *both* the claimed "single drift layer" *and* "well region," the Examiner allowed claim 10 (issued Claim 1). The Examiner did not raise Rhodes again despite having addressed it in detail earlier in prosecution. The Examiner concluded:

> [T]he prior art of record does not teach or suggest, singularly or in combination, at least the limitations of base claim 10 which requires "at least one well region disposed in said single drift layer, said well region having a graded concentration of dopants and a second static unidirectional electric drift field to aid the movement of minority carriers from said surface layer to said substrate[.]

EX-1002 (12/12/2012 Notice of Allowability), 18-19.

Rhodes is substantially the same as the prior art Petitioner relies on, as discussed below. Petitioner's strained interpretation of the "single drift layer" and "well region" limitations is undermined by the Examiner's allowance of the challenged claims over Rhodes.

B. *Advanced Bionics* Framework, Part 1 Supports Denial of Institution Because Payne and Wieczorek are Substantially the Same as Rhodes.

Part 1 of the *Advanced Bionics* framework[2] favors denial of institution because substantially the same prior art, Rhodes, was previously presented to the Office during examination and addressed in detail by the Examiner. "[T]he question of whether proffered art or arguments are 'the same or substantially the same' as art or arguments previously presented to the Office is a highly factual inquiry, which may be resolved by reference to the factors set forth in *Becton, Dickinson*." *Advanced Bionics*, IPR2019-01469, Paper 6, at 7.

Becton, Dickinson Factors (a) and (b) applied here demonstrate that "substantially the same art" was "previously presented to the office." Rhodes, which the Applicant overcame during prosecution of the '195 patent, is

[2] The three factors relevant to Part 1 of the *Advanced Bionics* framework include "(a) the similarities and material differences between the asserted art and the prior art involved during examination; (b) the cumulative nature of the asserted art and the prior art evaluated during examination;" and "(d) the extent of the overlap between the arguments made during examination and the manner in which petitioner relies on the prior art[.]" *Advanced Bionics*, IPR2019-01469, Paper 6, at 9 n.10 (citing *Becton, Dickinson*, IPR2017-01586, Paper 8, at 17-18).

substantially the same in relevant part as the references relied upon in the Petition, Payne and Wieczorek. None of these references discloses a well region disposed in a single drift layer. Instead, each reference discloses a well (or multiple wells), formed via multiple implant steps, resulting in a downward-sloping graded concentration of dopants with at least two differently sloped downslopes. As further discussed in sections VII.A and VII.B, Petitioner argues that a downward-sloping graded concentration with at least two differently sloped downslopes results in first and second "static unidirectional electric drift field[s] to aid the movement of minority carriers from said surface layer to said substrate." *See* Petition, 26. As it relates to the limitations of '195 Claims 1 and 2 and the relied upon elements in Payne and Wieczorek, there are no material differences between the asserted art and Rhodes. Payne and Wieczorek are thus cumulative of Rhodes; each "teaches no more than what a reasonable examiner would consider to be taught by [Rhodes] already before the PTO." *Roku, Inc. v. Universal Electronics, Inc.*, IPR2019-01619, Paper 11, at 17 (P.T.A.B. Apr. 2, 2020) (quoting *Regeneron Pharm., Inc. v. Merus N.V.*, 864 F.3d 1343, 1350 (Fed. Cir. 2017)).

Because Patent Owner should prevail under *Becton, Dickinson* Factors (a) and (b), Factor (d) is not required. The Board "need not reach the question of 'whether the same or substantially the same arguments were previously presented to the Office.'" *Roku*, IPR2019-01619, Paper 11, at 17 (citing *Advanced Bionics*,

IPR2019-01469, Paper 6, at 8, 20). Nevertheless, the Examiner did reject claims to a "well region" with graded dopant concentration "to aid carrier movement . . . towards the substrate" based on Rhodes, and the applicant effectively argued to distinguish Rhodes by amending the claims, as discussed above in section V.A. Applicant prevailed, and it is reasonable to infer that the Examiner agreed with the argument Patent Owner makes explicitly herein that a multiple-implant well does *not* disclose a well region disposed in a single drift layer. Thus, in weighing the factors, Factor (d) provides some additional support for denial of institution based on the totality of the prosecution history. The paragraphs below analyze *Becton, Dickinson* Factors (a) and (b) in detail. Not only do Petitioner's references show the same type of multiple-implant wells as Rhodes, but they are cumulative in every way in relation to the claim elements of the '195 patent.

1. It Is Indisputable that Rhodes's Disclosures Relating to Limitations [1.0]-[1.3] Are Substantially the Same as Those of Payne and Wieczorek.

Regarding the "CMOS Semiconductor device," "surface layer," "substrate," and "active region" limitations, there is no distinction between Rhodes, Payne, and Wieczorek, as shown below in an exemplary manner regarding Rhodes. This comparison applies equally to Wieczorek. *See* Petition, 60-71; EX-2002, 2-22.

[1.0] A CMOS Semiconductor device comprising:

Rhodes discloses a CMOS device just as Payne and Wieczorek do: "The present invention relates to improved semiconductor imaging devices and, in particular, to CMOS imagers with improved color separation and sensitivity." EX-2011, ¶ [0001].

[1.1] a surface layer

Rhodes provides substantially the same disclosure of a surface layer as Payne (and Wieczorek):

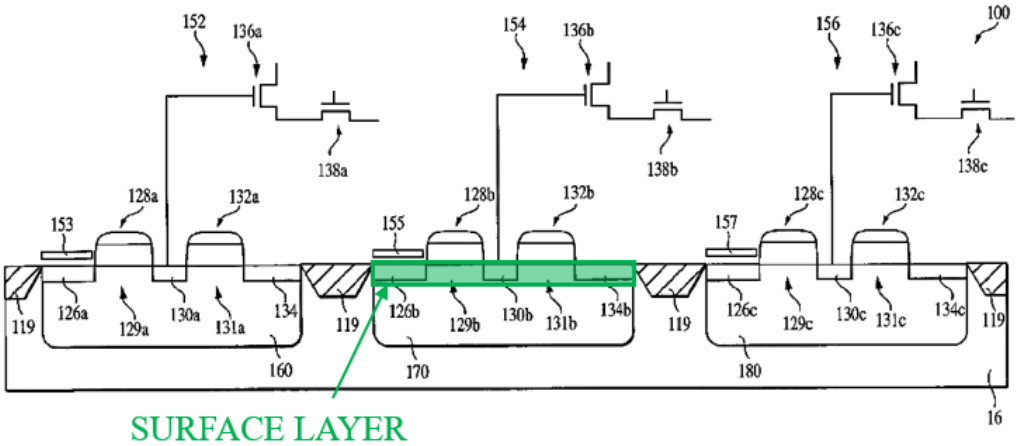

FIG. 12

Id., Rhodes Fig. 12 (annotations added).

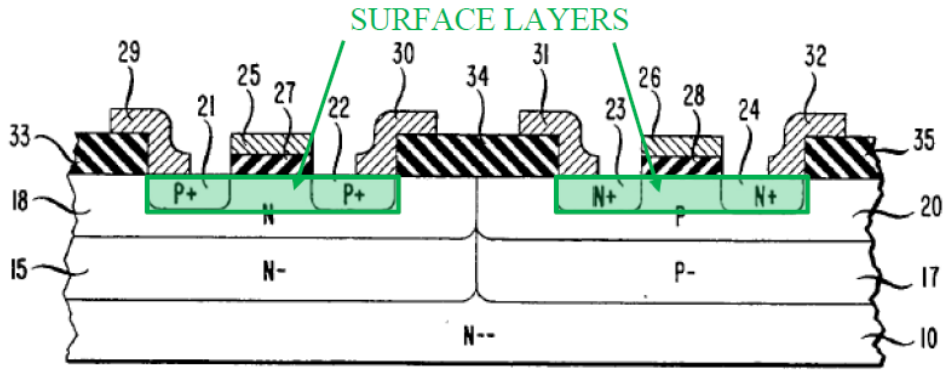

Petition, 16 (citing Payne Fig. 10) (Petitioner's annotations).

[1.2] a substrate

Rhodes provides substantially the same disclosure of a substrate, *i.e.*, "semiconductor substrate 16," (EX-2011, ¶ [0062]) as Payne (and Wieczorek):

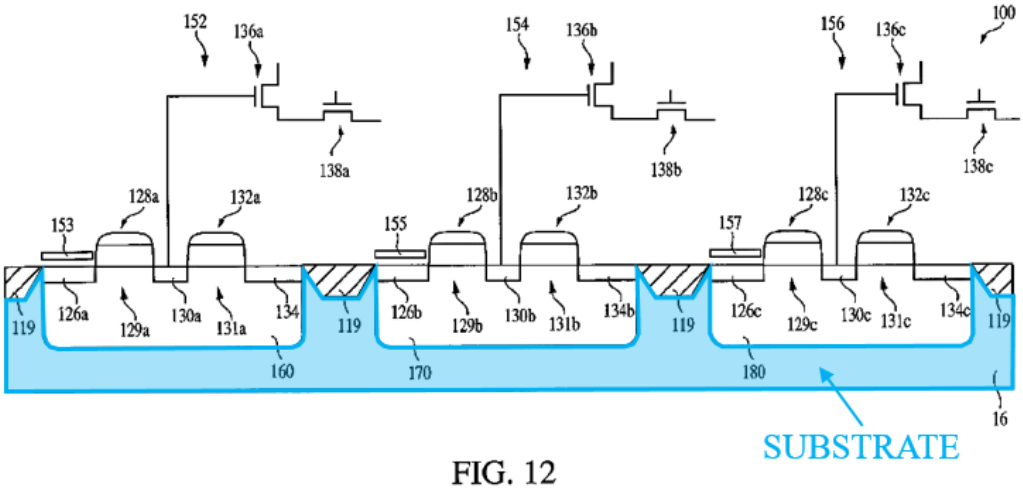

FIG. 12

EX-2011, Rhodes Fig. 12 (annotations added).

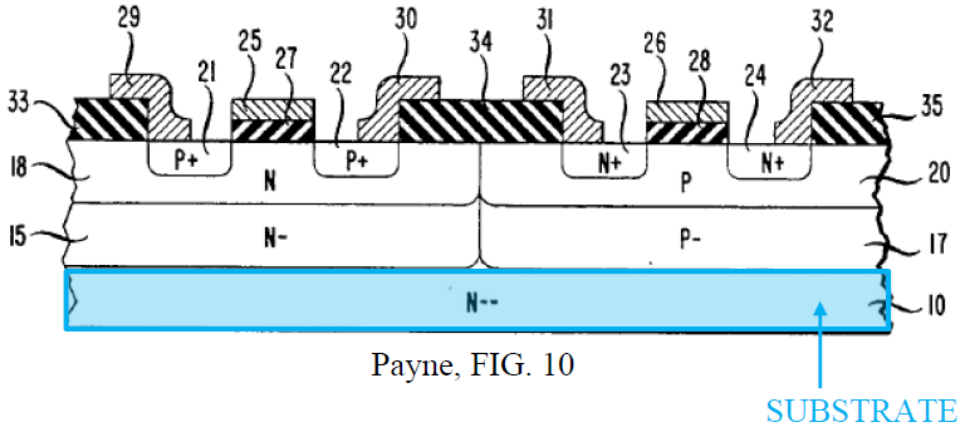

Payne, FIG. 10

Petition, 18 (citing Payne Fig. 10) (Petitioner's annotations).

[1.3] an active region including a source and a drain, disposed on one surface of said surface layer

Rhodes provides substantially the same disclosure as Payne (and Wieczorek) of an active region including a source and a drain, depicted in purple below, *i.e.*,

"doped region 130b," *i.e.*, "source for the reset transistor," (EX-2011, ¶ [0059]), and "doped region 134b," *i.e.*, "drain for the reset transistor," (*Id.*):

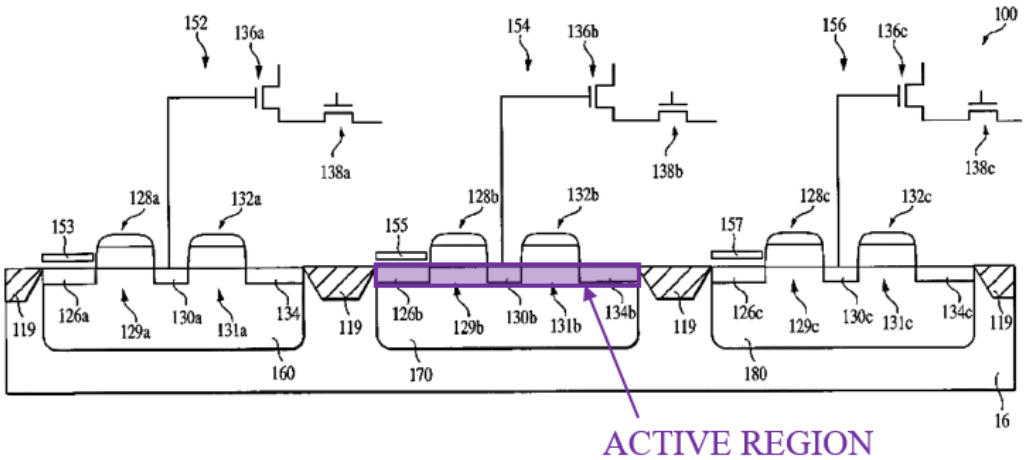

FIG. 12

Id., Rhodes Fig. 12 (annotations added).

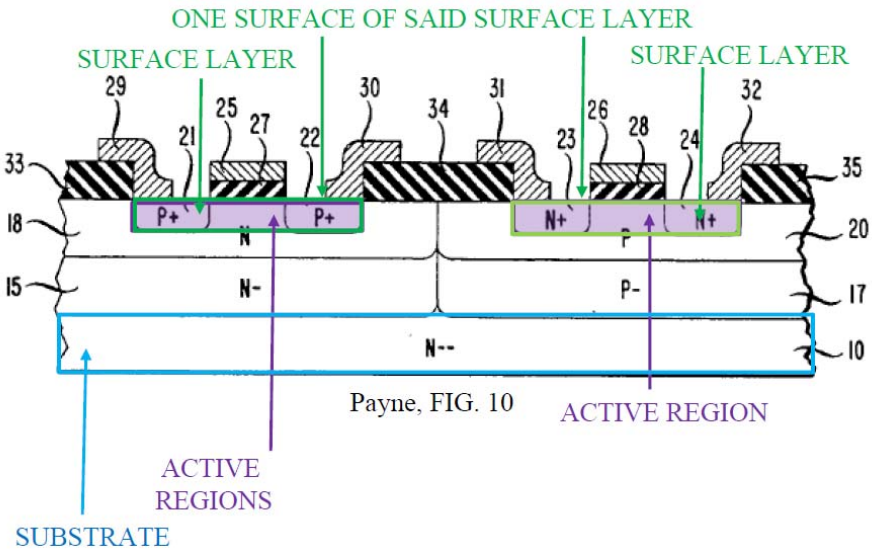

Petition, 20 (citing Payne Fig. 10) (Petitioner's annotations).

2. Rhodes's Disclosure of Multiple-Implant Wells Is Substantially the Same as Those of Payne and Wieczorek.

As discussed in sections VII.A and VII.B below, respectively, Petitioner identifies a well in each of Payne (referred to as a "tub") and Wieczorek as satisfying the "single drift layer" limitation, and *portions of the same tub/well* as satisfying the "at least one well region disposed in said single drift layer." *See* Petition, 20-35 and 42-56 (Payne), 71-82 (Wieczorek). Petitioner contends the purported "well regions" correspond to the portions of the tub/well formed by individual implantation steps. As discussed in section VI below, Petitioner's implicit construction of "well region" is incorrect. Regardless of how "well region" is construed or applied, however, as shown below, the disclosures of Rhodes, Payne, and Wieczorek—and specifically their multiple-implant wells—are substantially the same. EX-2013, ¶ 45.

As a preliminary matter, a single well can be, and frequently is, formed by multiple implants. *Id.*, ¶¶ 47-49. This was true as of the September 3, 2004 priority date for the '195 patent. Various contemporaneous references confirm this understanding. *Silicon Processing for the VLSI Era, Vol. 4 – Deep-Submicron Process Technology*, by Stanley Wolf (2002) ("Wolf Vol. 4"), defines the practice of "control[ling] of dopant levels throughout the depth of the well" as "well engineering." EX-2012, 184. "The incorporation of such multiple implants to form

a *modulated well* has become a firmly established processing approach in chip production." *Id.*, 187 (emphasis added). That multiple implants are used in forming a well does not mean that the well becomes a series of *separate wells or well regions*, as Petitioner suggests. EX-2013, ¶ 50.

Wolf Vol. 4 provides an illustrative example of a single well formed by multiple implants. As shown below, it illustrates a "CMOS well" (specifically, a P-well, as confirmed by the "Boron Concentration" label on the Y-axis) formed by two separate implants: a threshold-adjust [V_T] implant and an anti-punchthrough implant. *Id.*, 5 (showing as Figure 1-3(c) a "[d]oping profile in a <u>CMOS well</u> with a threshold-adjust [V_T] implant *and* an anti-punchthrough implant") (italics in original; underlining added).

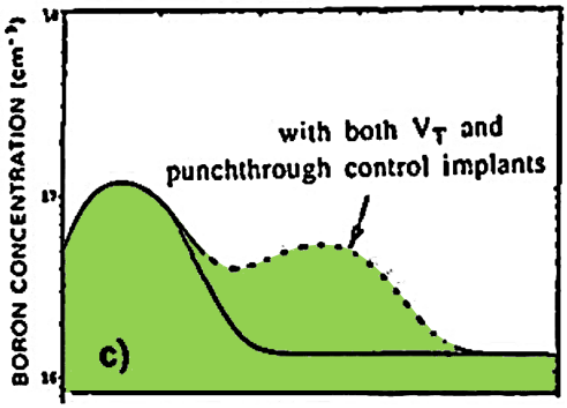

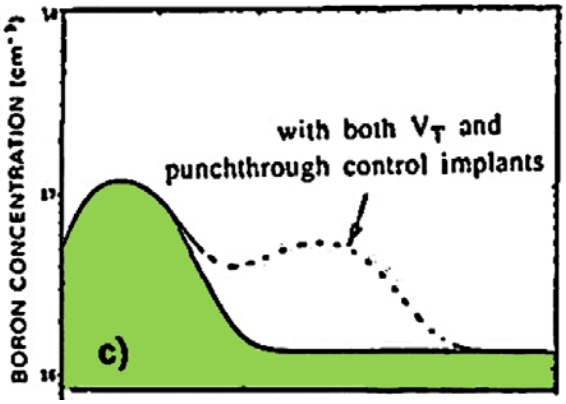

Id., Figure 1-3(c)[3] (left, showing two implants; right, showing one) (color added).

In the colorized versions of Figure 1-3(c) above, Wolf Vol. 4 illustrates what a POSITA would have understood: that the illustrated P-well is a single well, whether formed via two implants (image on left) or one (image on right). EX-2013, ¶ 48. By Wolf Vol. 4's own terms, the image on the left is not two wells or "well regions" simply because it was formed via two implants. Wieczorek itself illustrates the same concept, as discussed in section VI.C, below.

As shown above, wells are frequently formed by multiple implants. Rhodes explicitly acknowledges this, and both of Payne and Wieczorek illustrate this concept as well, as shown below with respect to Claim 1's "single drift layer" and "well region" limitations. Rhodes, Payne, and Wieczorek are substantially the same in relevant part. In allowing '195 Claims 1 and 2 after analyzing Rhodes, the Examiner already considered multiple-implant wells—the very category of prior art upon which Petitioner now relies.

[1.4] a single drift layer disposed between the other surface of said surface layer and said substrate, [1.5] said drift layer having a graded concentration of dopants extending between said surface layer and said substrate, [1.6] said drift layer further having a first static unidirectional electric drift field to aid the movement of minority carriers from said surface layer to said substrate

[3] Wolf Vol. 4, Figure 1-3(c) shows depth on the X-axis and dopant concentration on the Y-axis.

Rhodes discloses exactly the same structures that Petitioner incorrectly relies on in Payne and Wieczorek regarding the "single drift layer." Rhodes discloses three separate wells, p-wells 160 (deep retrograde p-well), 170 (shallow p-well), and 180 (shallow retrograde p-well), which are depicted in Figure 12, below.

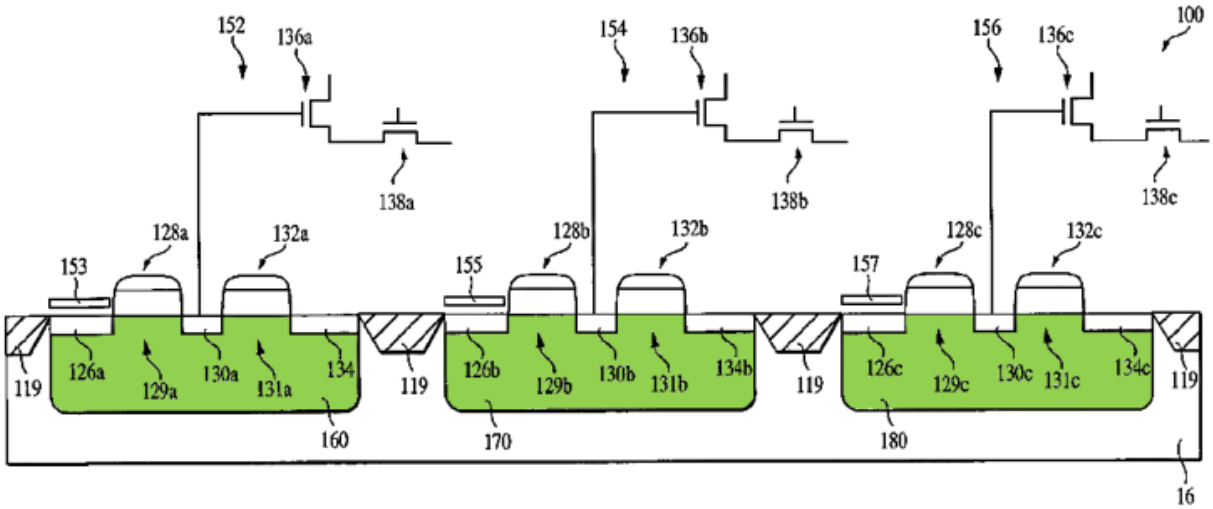

FIG. 12

EX-2011, Fig. 12 (color added).

Rhodes depicts exemplary doping profiles for these wells, with peak concentrations at varying depths, including a peak concentration at the surface in Figure 13b (corresponding to shallow p-well 170):

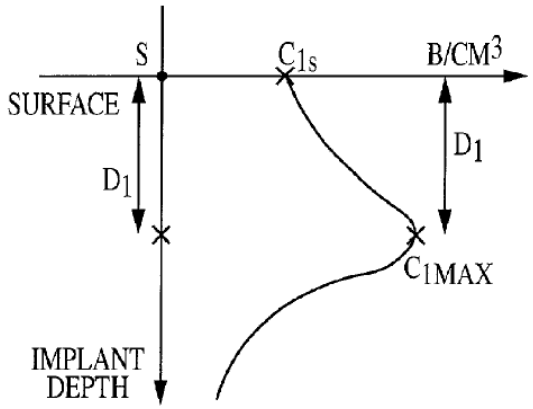

FIG. 13a

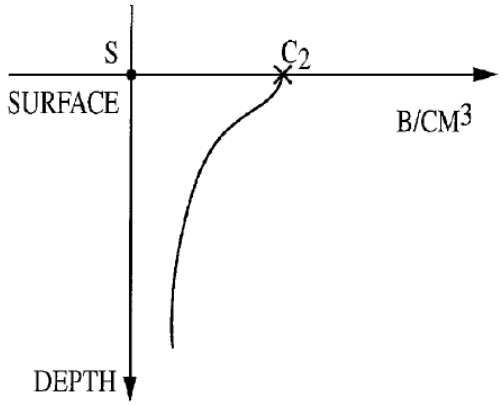

FIG. 13b

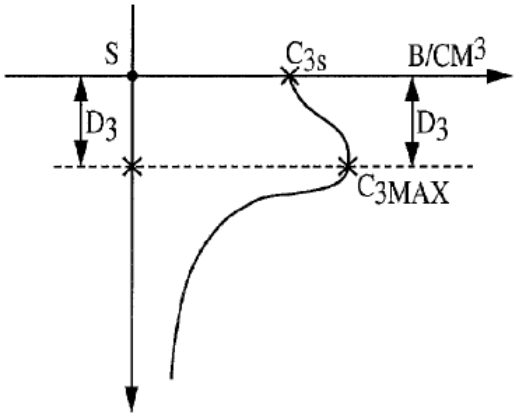

FIG. 13c

Id., Figs. 13a (corresponding to deep retrograde p-well 160 (*see id.*, ¶ [0049])), 13b (corresponding to shallow p-well 170 (*see id.*, ¶ [0052])), 13c (corresponding to shallow retrograde p-well 180 (*see id.*, ¶ [0055])); EX-2013, ¶¶ 42-43.

One Rhodes figure in particular, Figure 13b, depicts a doping profile that slopes *only downward* from the surface, like the doping profiles in Payne Figure 11 and Wieczorek Figure 4, as shown below:

Rhodes

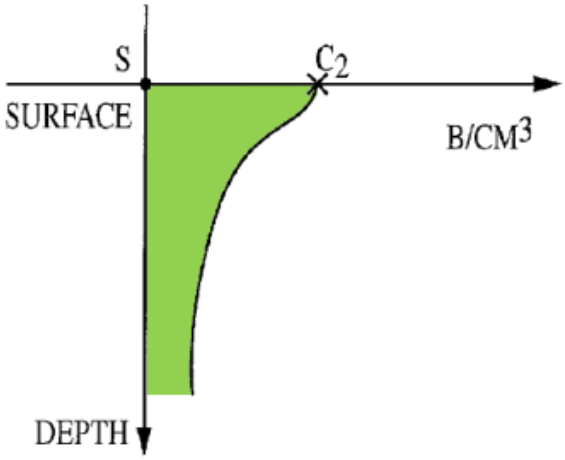

FIG. 13b

Payne

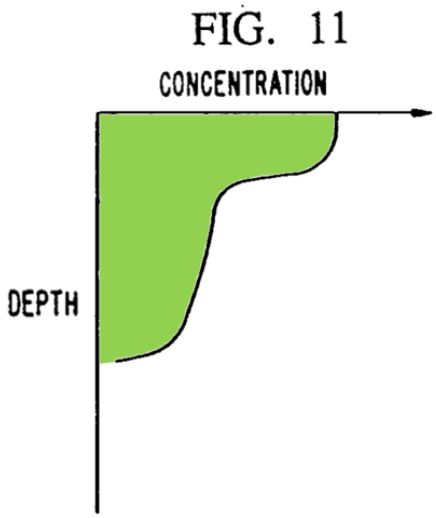

Wieczorek

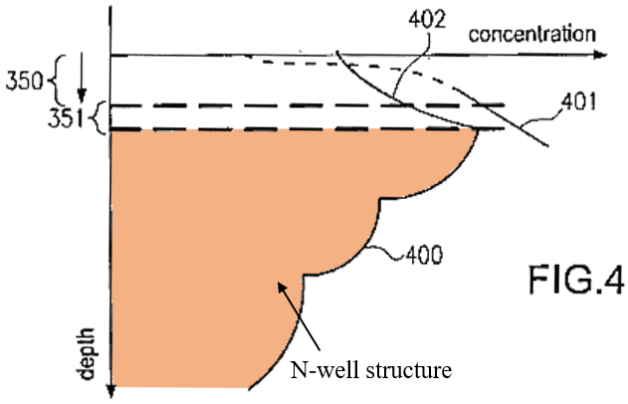

Id., Rhodes Fig. 12 (top left) (color added); EX-1005, Payne Fig. 11 (top right) (color added, modified to rotate graph 90º while maintaining axis labels); EX-1006, Wieczorek Fig. 4 (bottom center) (annotations added).

It is apparent from the doping profile of Figure 13b that the depicted well was formed via a single implant. EX-2013, ¶ 44. This explains why it looks somewhat different from the profiles of Payne and Wieczorek. *Id.* Rhodes

explicitly states, however, that the dopant profiles of wells, including shallow p-well 170, can be "tailored" via *multiple implants*:

> *Multiple high energy implants* may be also used to tailor the profile of each of the deep retrograde p-well 160, the second shallow p-well 170 or the shallow retrograde p-well 180.

EX-2011, ¶ [0064] (emphasis added).

A POSITA would recognize that if multiple implants were used—rather than a single implant—to "tailor the profile" of well region 170, the doping profile in Figure 13b would include areas of varying slope, just as Payne's and Wieczorek's doping profiles do. EX-2013, ¶ 45. A POSITA would also understand that it would not make sense for the tailored dopant profile to include *both* upslopes and downslopes. *Id.* A POSITA would know not to tailor the doping profile in a manner that would risk undermining the purpose of the doping profile shown in Figure 13b. *Id.* Rhodes's wells are thus substantially the same as the wells in Payne and Wieczorek, which are formed via multiple implant steps, as discussed in detail in sections VII.A and VII.B, below. *See id.* Petitioner's flawed arguments as to those references apply equally to Rhodes.

Petitioner does not rely on anything from Payne's or Wieczorek's disclosures that is absent from Rhodes's disclosure. As shown above, Rhodes discloses exactly the same structures that Petitioner incorrectly relies on in Payne and Wieczorek regarding the "single drift layer," *i.e.*:

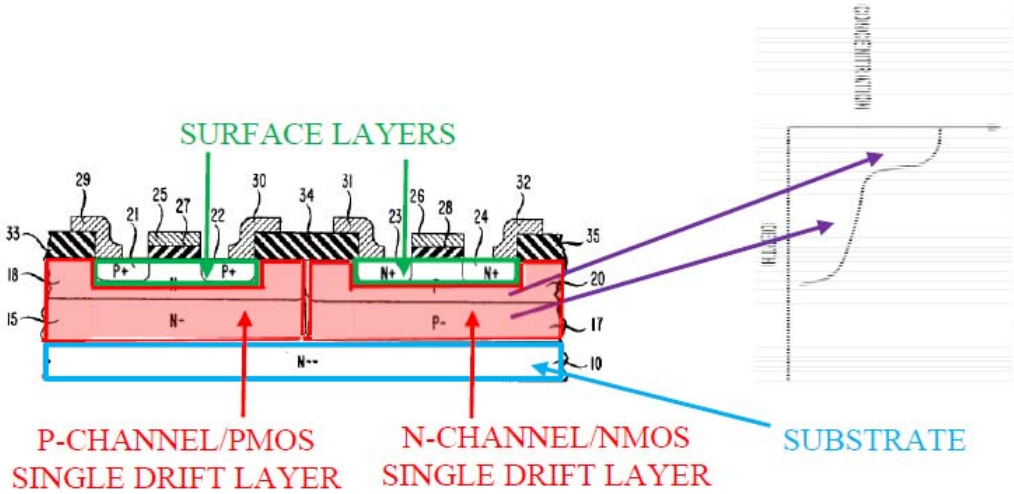

Petition, 25 (citing Payne Figs. 10 (left), 11 (right)) (Petitioner's annotations).

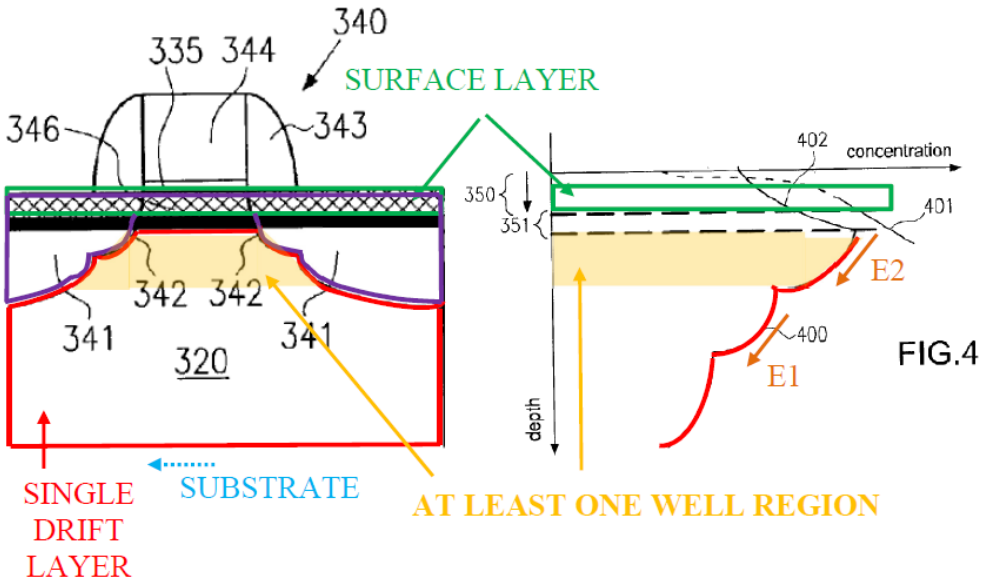

Petition, 81 (citing Wieczorek Figs. 3f (left), 4 (right)) (Petitioner's annotations); *see also id.*, 72-78.

Rhodes also discloses the same downward-sloping profile, as shown above in Figure 13b, that is the basis of Petitioner's argument that Payne and Wieczorek disclose a "first static unidirectional electric drift field to aid the movement of

minority carriers from said surface layer to said substrate." *See, e.g.*, Petition, 26 (noting that "'a graded dopant concentration itself creates a 'built-in' electrical field that forces the movement of carriers into a particular direction, whereby the 'direction' of the electrical field and the resulting direction of the carrier movement depends solely on the slope of the graded concentration of dopant'" (emphasis in original); "Depending on the particular slope of the graded concentration of dopant, all minority carriers are either swept 'down' (from the surface layer to the substrate) or 'up' (from the substrate to the surface layer)."); *see also* Petition, 75.

[1.7] at least one well region disposed in said single drift layer, said well region having a graded concentration of dopants and a second static unidirectional electric drift field to aid the movement of minority carriers from said surface layer to said substrate.

Rhodes also discloses exactly the same structures Petitioner incorrectly relies on in Payne and Wieczorek regarding the "at least one well region disposed in said single drift layer." Petitioner identifies *portions* of Payne's tubs 15 and 17 (*i.e.*, the high concentration surface regions 18 and 20) and Wieczorek's N-well structure 320 as satisfying the "at least one well region disposed in said single drift layer." Petition, 33-35 and 56-58 (Payne), 78-82 (Wieczorek). The purported "well region" corresponds to a region within the tub/well formed by an individual implantation step. *Id.*

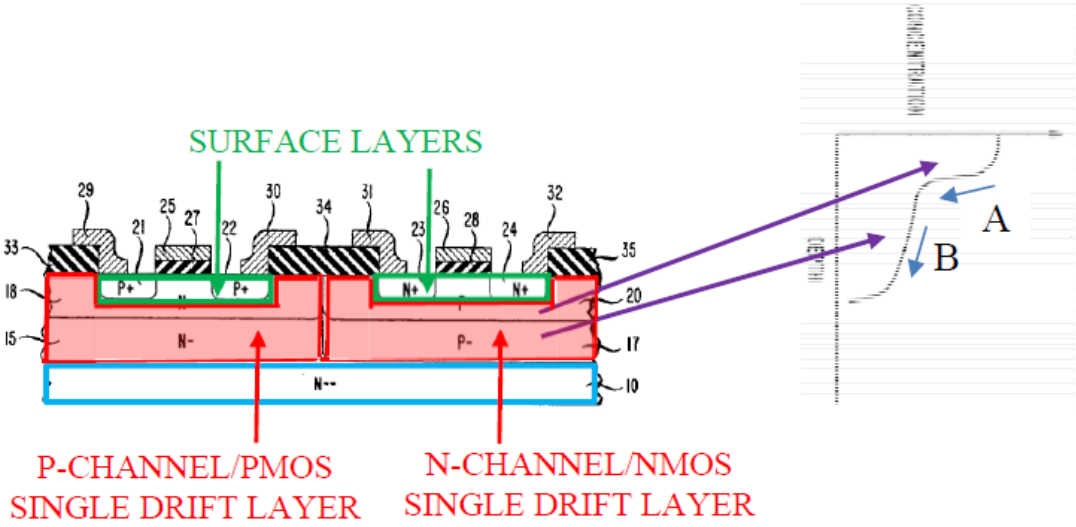

Petition, 34 (citing Payne Figs. 10 (left), 11 (right)) (Petitioner's annotations).

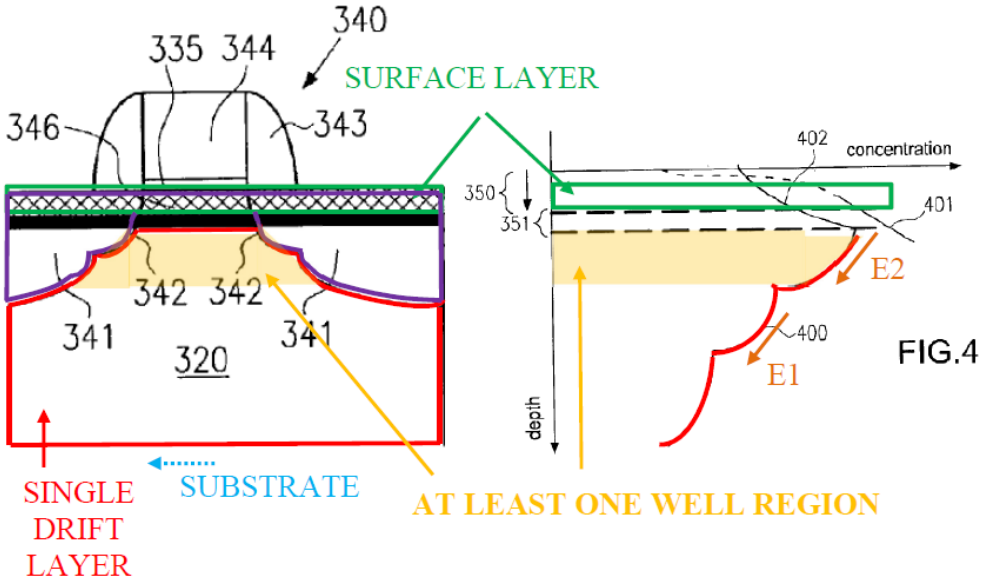

Petition, 81 (citing Wieczorek Figs. 3f (left), 4 (right)) (Petitioner's annotations).

As discussed above regarding the "single drift layer" limitation, however, Rhodes also discloses a well formed by a multiple-implant process, just like Payne and Wieczorek. Rhodes's shallow p-well 170, whose doping profile is depicted in Rhodes Figure 13b, can be "tailored" via "[m]ultiple high energy implants."

EX-2011, ¶ [0064]. Shallow p-well 170 can thus have different regions formed by the individual implantation steps as well. EX-2013, ¶¶ 44-45.

The disclosures of Rhodes, Payne, and Wieczorek, including their multiple-implant wells, are substantially the same. Because the Examiner already considered Rhodes, part 1 of the *Advanced Bionics* framework favors denial of institution.

C. *Advanced Bionics* Framework, Part 2 Supports Denial of Institution.

Part 2 of the *Advanced Bionics* framework[4] favors denial of institution. At this stage, "Petitioner must demonstrate that the Examiner erred in the evaluation of the prior art, for example, by showing that the Examiner misapprehended or

[4] The three factors relevant to Part 2 of the *Advanced Bionics* framework include "(c) the extent to which the art was evaluated during examination, including whether the prior art was the basis for rejection;" "(e) whether petitioner has pointed out sufficiently how the examiner erred in its evaluation of the asserted prior art; and (f) the extent to which additional evidence and facts presented in the petition warrant reconsideration of the prior art or arguments." *See Advanced Bionics*, IPR2019-01469, Paper 6, at 9 n.10 (citing *Becton, Dickinson*, IPR2017-01586, Paper 8, at 17-18).

overlooked specific teachings in the relevant prior art such that the error by the Office was material to the patentability of the challenged claims." *Advanced Bionics*, IPR2019-01469, Paper 6, at 21. The Board's rationale for the two-part test, as articulated in *Advanced Bionics*, is instructive as to this high burden:

> If a condition in the first part of the framework is satisfied and the petitioner fails to make a showing of material error, the Director generally will exercise discretion not to institute *inter partes* review. If reasonable minds can disagree regarding the purported treatment of the art or arguments, it cannot be said that the Office erred in a manner material to patentability. At bottom, this framework reflects a commitment to defer to previous Office evaluations of the evidence of record unless material error is shown.

Id. at 8-9.

As discussed above, the Examiner addressed Rhodes in detail during prosecution, and Rhodes was the basis for two § 102 rejections. Rhodes was cited specifically for its disclosure of "well regions." Dr. Smith analyzed the '195 prosecution history for evidence to support Petitioner's positions. *See* EX-1003, ¶¶ 16, 29-34; Petition, 5. Petitioner could have and should have anticipated Patent Owner's § 325(d) argument because it is immediately apparent that Rhodes was the subject of two rejections, and that Rhodes discloses multi-implant wells like Payne and Wieczorek, as discussed above in section V.B. *See Unified Patents Inc. v. Korea Advanced Institute of Science*, IPR2019-01071, Paper 11, at 2-4 (P.T.A.B.

Oct. 3, 2019) ("Petitioner could have, but did not, address the 35 U.S.C. § 325(d) and claim construction issues in its Petition[.]").

Given Petitioner's failure to acknowledge the § 325(d) issues that its positions regarding Payne and Wieczorek create, it is no surprise that Petitioner did not address *Becton, Dickinson* Factors (c), (e), and (f). In any event, regarding Factor (c), Patent Owner acknowledges that Payne and Wieczorek were not before the Examiner and thus were not themselves evaluated. This fact does not weigh against denying institution, however. *See, e.g.*, *Advanced Bionics*, IPR2019-01469, Paper 6, at 10; *Roku*, IPR2019-01619, Paper 11, at 18-19. Instead, it merely provides context for how factors (e) and (f) are interpreted:

> Factor (c) focuses on the record developed by the Office in previously reviewing the art or arguments. It informs, therefore, the petitioner's showing under factors (e) and (f), which focus on the petitioner's evidence of previous Office error regardless of the context in which the same or substantially the same art or arguments were previously presented. . . . That is, although *Becton, Dickinson* factor (c) evaluates "the extent to which the asserted art was evaluated during examination, including whether the prior art was the basis for rejection," the focus should be on the record when determining whether the Office erred in evaluating such art or arguments.

Advanced Bionics, IPR2019-01469, Paper 6, at 10-11. Given the substantial similarities to, and cumulativeness of, Payne and Wieczorek as compared to Rhodes, Factor (c) simply requires that the Board consider the "record developed by the Office" in reviewing Rhodes. *Id.*

Regarding Factor (e), Petitioner does not allege that the Examiner committed any error or failed to conduct a thorough examination. *See Roku*, IPR2019-01619, Paper 11, at 19. Indeed, the examination was extensive, and allowance followed numerous rejections and amendments. There were no errors in prosecution, actual or alleged, so this factor weighs in favor of denying institution.

Regarding Factor (f), even though Payne and Wieczorek were not considered by the Examiner, Rhodes was thoroughly considered, as discussed above, and Rhodes is substantially the same as, and cumulative of, Payne and Wieczorek. Petitioner thus presents no new evidence or facts material to patentability that were not before the Office previously. *See Roku*, IPR2019-01619, Paper 11, at 19. Thus, this factor weighs in favor of denying institution.

Weighing these factors, the Board should exercise its discretion to deny institution under 35 U.S.C. § 325(d). *See Roku*, IPR2019-01619, Paper 11, at 20.

VI. CLAIM CONSTRUCTION

Petitioner contends that all terms should be given their plain and ordinary meaning for purposes of this IPR. Petition, 8. Patent Owner largely agrees. But Petitioner's positions regarding the Payne and Wieczorek references indicate that Petitioner is not applying the plain and ordinary meaning of the "well region" term. Although Petitioner does not request construction of "well region," its positions regarding that term in the context of the prior art are based on a construction much

broader than the plain and ordinary meaning of "well region." EX-2013, ¶¶ 41-42, 46.

Specifically, as discussed in section V.B above, Petitioner identifies a well in each of Payne (referred to as a "tub") and Wieczorek as satisfying the "single drift layer" limitation, and *portions* of the tub/well as satisfying the "at least one well region disposed in said single drift layer," where the purported "well regions" correspond to the portions of the tubs/wells formed by individual implantation steps. Petitioner's implied construction of "well region," *i.e.*, "a portion of a well formed by an implantation step," is inconsistent with the intrinsic record and the meaning of the term to a POSITA. EX-2013, ¶¶ 41-42, 46. Stated differently, a multi-implant well where each implant step is of the same doping type and has the same boundaries cannot possibly be a "single drift layer" and a "well region disposed in said single drift layer."

The District Court held a *Markman* hearing on April 2, 2020. EX-2007, 1. Neither Petitioner nor Patent Owner requested construction of the term "well region." If a trial is instituted, Patent Owner may propose a construction. But for purposes of this Patent Owner Preliminary Response, it is sufficient to show that Petitioner's unstated construction is incorrect, and Petitioner has failed to meet its burden to show a reasonable likelihood of unpatentability.

A. The Specification's Use of "Well Region" and "Well."

The '195 patent specification's usage of the terms "well region" and "well" do not support Petitioner's implied construction of "well region." The term "well region" is used once in the '195 patent specification: "Most MOS devices use a uniformly doped substrate (or a well region)." EX-1001, 1:50-51; EX-2013, ¶¶ 40-41.

The '195 patent depicts wells in its figures. Figure 3(a) depicts a "[p]rior art (Twin well CMOS) for a CMOS integrated circuit," specifically, depicting two p-wells and an n-well.

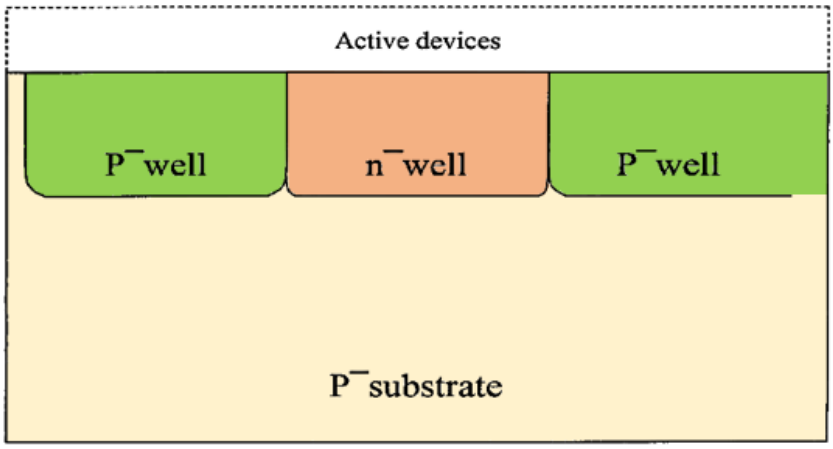

Id., Fig. 3(a) (color added); EX-2013, ¶ 40. Figure 5(a) also depicts exemplary p^- and n^- wells, this time formed in a "[g]raded dopant n^- layer."

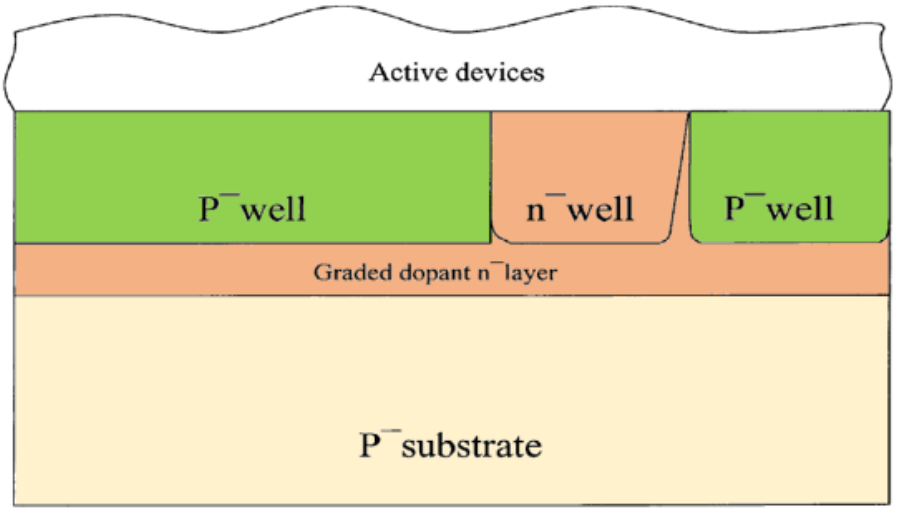

EX-1001, Fig. 5(a) (color added); EX-2013, ¶ 40.

Nowhere in the claims or the specification does the '195 patent suggest that the claimed "well region" is a portion of a well. EX-2013, ¶ 41. Not only would such a construction be inconsistent with the prosecution history and the manner in which a POSITA would understand the term "well region," as discussed below, but it would mean that a simple multiple-implant well—which is disclosed in numerous prior art references, including Rhodes (which was overcome during prosecution, as discussed above in section V.A), going back decades before the '195 patent's priority date—could satisfy both the "single drift layer" and the "at least one well region disposed in said single drift layer" limitations of Claim 1. *See id.*, ¶¶ 46-50. Such a construction cannot be correct. If it were an appropriate construction, presumably the Examiner would not have deemed the challenged claims patentable over Rhodes.

B. The Prosecution History Regarding "Well Region."

The prosecution history of the '195 patent does not support Petitioner's implied construction of "well region." Claim 1 of the '195 patent requires "at least one well region disposed in said single drift layer, said well region having a graded concentration of dopants and a second static unidirectional electric drift field to aid the movement of minority carriers from said surface layer to said substrate." EX-1001, Claim 1 (4:25-29). As discussed in section V.A above, this limitation was added late in prosecution and was cited by the Examiner as the reason for allowance:

> [T]he prior art of record does not teach or suggest, singularly or in combination, at least the limitations of base claim 10 [issued claim 1] which requires "at least one well region disposed in said single drift layer, said well region having a graded concentration of dopants and a second static unidirectional electric drift field to aid the movement of minority carriers from said surface layer to said substrate[.]"

EX-1002 (12/12/2012 Notice of Allowability), 18-19; *see also* EX-2013, ¶ 36.

The applicant used the term "well region" in original application claim 3, seeking to claim "[a] semiconductor device with graded dopant concentration in the *well regions*, to aid carrier movement away from the active surface regions, towards the substrate." EX-1002 (Application), 356 (emphasis added). As discussed in section V.A, during prosecution, the Examiner rejected the claim as anticipated over Rhodes. The Examiner noted:

> Rhodes (refer to Figures 5-14) teaches a semiconductor device with graded dopant concentration (page 4, para 0046, 1st sentence) in the *well regions (160, 170, 180)* to aid carrier movement away from the active surface regions, towards the substrate (page 6, para 0061; page 4, para 0045 & 0049).

Id. (07/28/2008 Office Action), 307 (emphasis added); *see also* EX-2013, ¶ 33.

Well regions 160, 170, and 180—discussed extensively in section V.B above—are depicted in Rhodes Figure 12 as wells, consistent with the manner in which a POSITA would understand the term "well region." EX-2013, ¶ 42. These wells can be "tailored" via "[m]ultiple high energy implants." EX-2006, ¶ [0064]. Rhodes thus contemplates that *a single well* can be formed via multiple implants, just as Payne's tubs and Wieczorek's well structures are. EX-2013, ¶ 44.

If Petitioner's implied construction of "well region" were correct, the Examiner presumably would have deemed Rhodes to satisfy both the "single drift layer" and the "at least one well region disposed in said single drift layer" limitations of '195 Claim 1 (as Petitioner now contends with regard to Payne and Wieczorek) and thus found it to be anticipated by Rhodes. The Examiner's allowance of the challenged claims represents a rejection of Petitioner's flawed argument and of Petitioner's implicit construction of "well region."

C. Contemporaneous References Confirm that Petitioner's Usage of "Well Region" Is Incorrect.

A single well can be, and frequently is, formed by multiple implants. As discussed above in section V.B, Wolf Vol. 4, from 2002, illustrates this and describes the concepts of "well engineering" and forming "modulated wells" through multiple implants, even noting that it was "a firmly established processing approach in chip production." EX-2012, 184, 187; *see also id.*, 5; EX-2013, ¶ 48. Again, the fact that multiple implants are used to form a well does not mean that the well becomes a series of *separate wells or well regions*, as Petitioner suggests. EX-2013, ¶¶ 47-50.

Petitioner's own relied upon prior art, Wieczorek, illustrates the same concept. The Wieczorek application was filed in 2002. EX-1006. In discussing the prior art at that time, Wieczorek describes, in language consistent with the understanding of a POSITA, "well structures," *i.e.*, "N-well structure 120" and "P-well structure 110." *Id.*, ¶ [0007]; EX-2013, ¶ 77. These well structures are depicted below in Figures 1a and 1b as monolithic structures, formed via multiple implants each. EX-2013, ¶ 77.

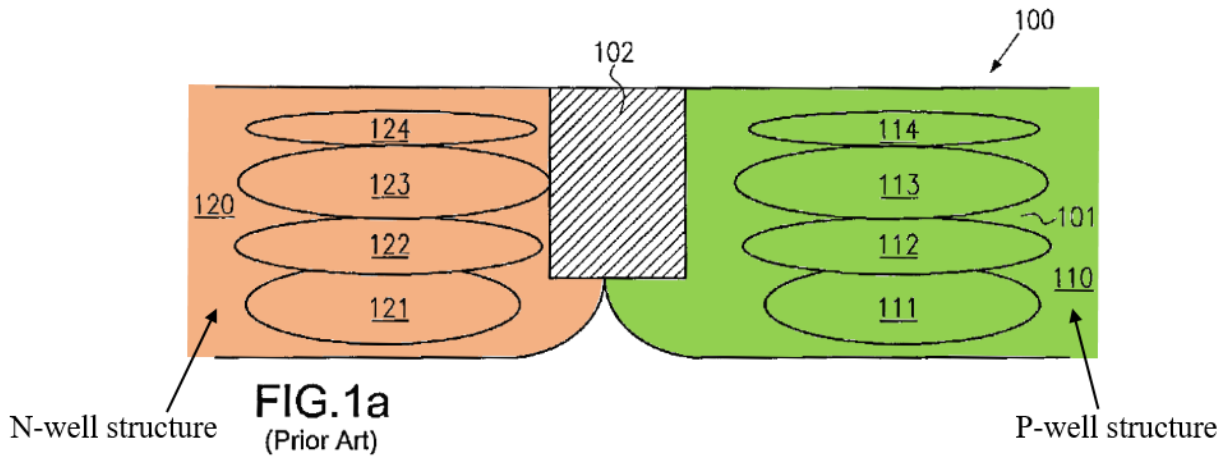

EX-1006, Fig. 1a (annotations added).

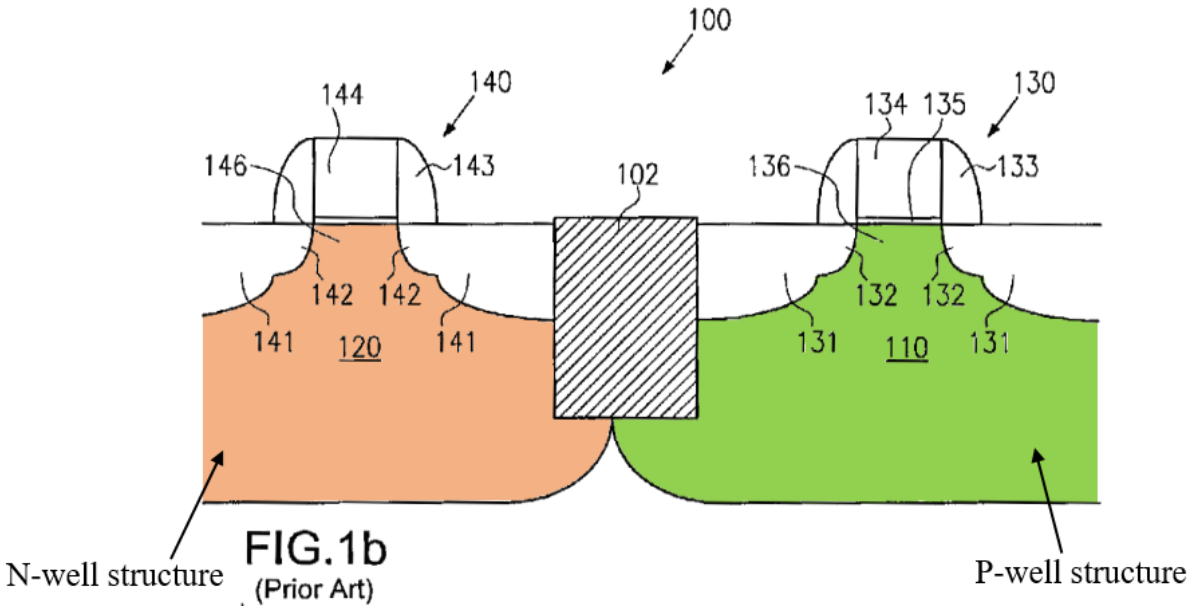

Id., Fig. 1b (annotations added).

Figure 1a describes well structures 120 and 110 in terms of the constituent implants used to form them:

> In the N-well structure 120, implanted, i.e., doped, portions are indicated by 121, 122, 123 and 124, and correspondingly, in the P-well structure 110, implanted portions 111, 112, 113 and 114 are illustrated. The implantation portions 111, 121 located

> lowest in the N-well structure 120 and the P-well structure 110 are also referred to as *buried implants*. The implanted portions 112, 122 are commonly known as *fill implants*, whereas the implanted portions 113, 123 are usually referred to as *punch-through implants*. The implanted portions 114, 124 are also called V_T *implants*, wherein V_T indicates the threshold voltage of the transistor elements to be formed.

Id., ¶ [0007] (emphases added); EX-2013, ¶ 78.

As a POSITA would expect, "the P-well structure 110 and the N-well structure 120 are defined by sequentially performed ion implantation processes[.]" EX-1006, ¶ [0008]; EX-2013, ¶ 79. "During implantation, the dose and the energy of the respective implantation process is controlled so as to locate the peak concentration of the corresponding ion species in the respective implantation portions 121 to 124 and 111 to 114." EX-1006, ¶ [0008]. Notably, "due to the nature of the implantation process, the boundaries of the implantation portions for defining the P-well structure 110 and the N-well structure 120 are not sharp boundaries as shown in FIG. 1a but, instead, have *gradual transitions*." *Id.* (emphasis added). Figure 2a below represents the dopant concentration of the N-well structure 120 and the P-well structure 110 after implantation but before heat treatment. *Id.*, ¶ [0009]; EX-2013, ¶ 80.

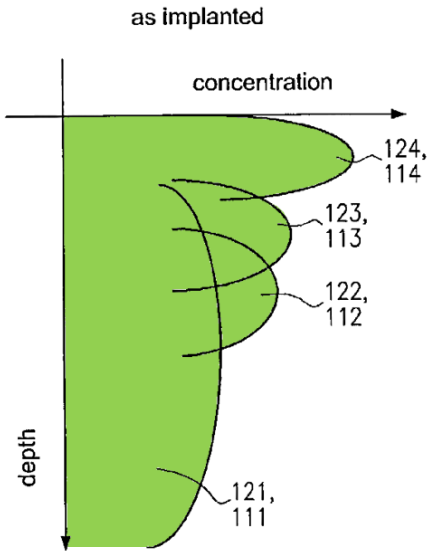

FIG.2a
(Prior Art)

Id., Fig. 2a (color added to reflect P-well structure 110 embodiment).

After implantation in the described prior art device, the semiconductor device is subjected to a typical heat treatment, during which "diffusion takes place and the boundaries between the respective implantation portions will smear out more intensively so that the vertical dopant profile within the P-well structure 110 and the N-well structure 120 will become more *indefinite*." *Id.*, ¶ [0010] (emphasis added); EX-2013, ¶ 81. The dopant profile post-heat-treatment is shown in Figure 2b, below. EX-1006, ¶¶ [0011], [0013]; EX-2013, ¶ 81. All of the implanted portions smear together considerably. EX-2013, ¶ 81.

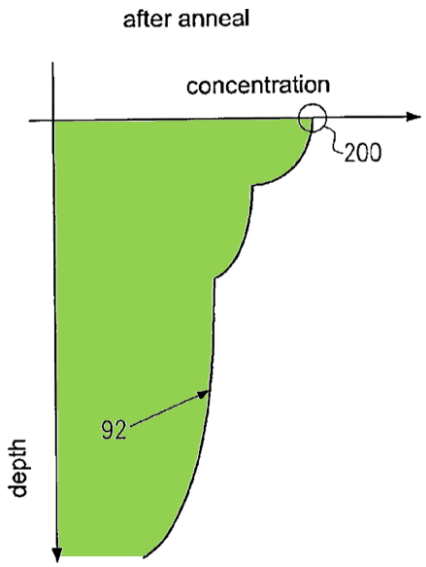

FIG.2b
(Prior Art)

Id., Fig. 2b (color added to reflect P-well structure 110 embodiment).

Given the timing of the Wieczorek application, its discussion of the prior art is apt. The invention of Wieczorek also includes a multi-implant "well structure," and as with the prior art shown in Figures 1a, 1b, 2a, and 2b, Wieczorek depicts and discusses these well structures as monolithic wells. *See, e.g.*, *id.*, ¶¶ [0015] ("wherein a substantially monocrystalline channel layer is formed after a well structure has been defined by ion implantation in a semiconductor region"), [0018] ("a semiconductor device comprises . . . a well structure formed in a substrate"); EX-2013, ¶ 82. As shown in Figure 3f below, "[t]he P-well structure 310 and the N-well structure 320 both comprise respective dopants arranged within the respective well structures so as to result in" a dopant concentration similar to that of Figure 2a, discussed above. *Id.*, ¶¶ [0027], [0028] ("[T]he P-well structure 310

and the N-well structure 320 are defined by ion implantation, wherein several implantation steps may be used as it is described with reference to FIG. 1a.”).

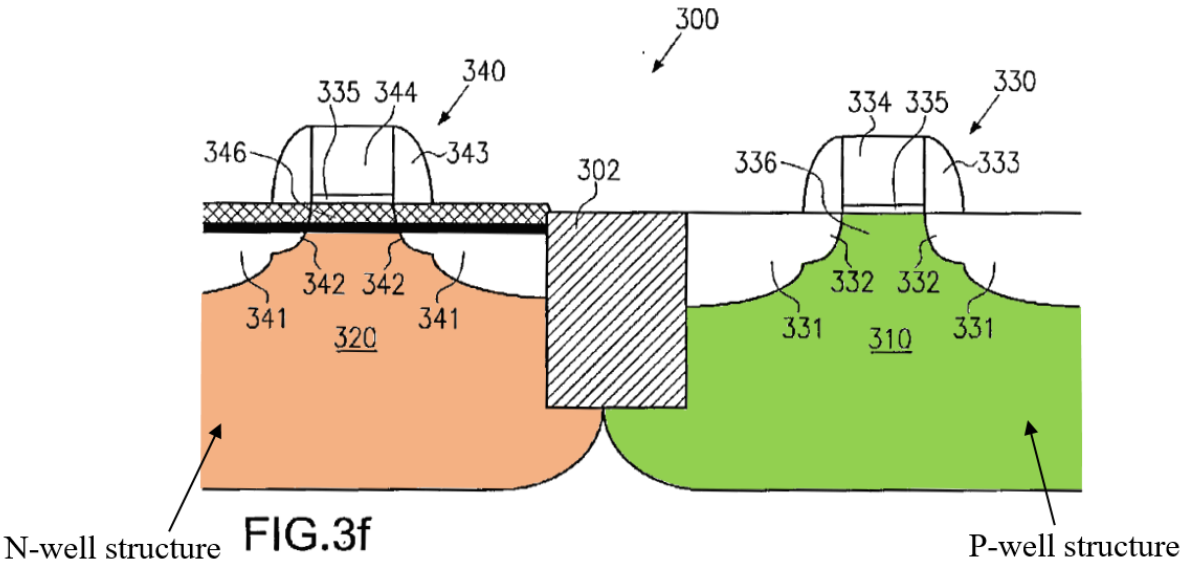

Id., Fig. 3f (annotations added).

Wieczorek’s discussion of well structures, and its treatment of those well structures as monolithic, even though they are formed through multiple implant steps, is consistent with how a POSITA would understand the term “well region,” (EX-2013, ¶ 95), further confirming Petitioner’s usage is not correct.

VII. PETITIONER FAILS TO ESTABLISH A REASONABLE LIKELIHOOD THAT THE APPLIED REFERENCES RENDER THE CHALLENGED CLAIMS UNPATENTABLE

Petitioner does not establish a reasonable likelihood that Payne or Wieczorek discloses all of the limitations of Claims 1 and 2. Petitioner also fails to provide an articulated reasoning with some rational underpinning to support its legal conclusion of obviousness for Claims 1 and 2 in view of Payne or Wieczorek

in further view of the knowledge of a POSITA. Based on these deficiencies, which are described in detail below, the Board should not institute trial on Grounds 1a, 1b, 2a, or 2b.

Neither Payne nor Wieczorek discloses both the recited "single drift layer disposed between the other surface of said surface layer and said substrate" *and* the "at least one well region disposed in said single drift layer" of Claim 1. Instead, as discussed above in sections V.B and VI, both references disclose commonplace multi-implant wells. Applying the plain and ordinary meaning of "well region," these well structures and portions thereof cannot satisfy both of these claim limitations. EX-2013, ¶¶ 73-98.

A. Petitioner Does Not Establish a Reasonable Likelihood that Payne Anticipates Claim 1 or 2 (Ground 1a) or Renders Obvious Claim 1 or 2 (Ground 1b).

Petitioner contends that Payne anticipates Claims 1 and 2 (Ground 1a) or renders obvious Claims 1 and 2 (Ground 1b). Petitioner uses two different "mappings," where Petitioner draws different boundaries around, *e.g.*, Payne's purported "surface layer." *See* Petition, 12-17 ("Mapping One"), 38-39 ("Mapping Two"). The distinction between the two mappings is not relevant here. EX-2013, ¶ 56. Petitioner's failure to establish a reasonable likelihood that Payne anticipates or renders obvious Claims 1 and 2 applies equally to both mappings.

1. Overview of Payne

Payne is directed to permitting "high packing density" in CMOS devices. EX-1005, Abstract, 1:51-54; EX-2013, ¶ 53. Tub formation in prior art devices[5] required "a considerable amount of semiconductor area" because "tub impurities will diffuse laterally as well as vertically during drive-in[6] to establish the desired tub depth." *Id.*, 1:34-38; EX-2013, ¶ 53. "This is particularly troublesome in the twin-tub process since any significant overlap of the two tubs results in decreased doping concentration of each tub at the boundaries which can cause punch through or field inversion channeling during device operation." EX-1005, 1:39-43.

This problematic drop in doping concentration is illustrated in Figures 12 and 13 below, "which show the approximate distribution of impurities laterally along the semiconductor surface for, respectively, a typical prior art CMOS device and a CMOS device made in accordance with the invention." *Id.*, 5:56-61; EX-2013, ¶ 54. In these figures, "[t]he dashed lines show the individual profiles for

---

[5] The application that issued as Payne was filed in 1981. EX-1005. The problems it describes are applicable to devices and well-formation techniques of that time, including high-heat, diffusion-based well formation processes. EX-2013, ¶ 52.

[6] "Drive-in" refers to the high-heat process used to cause dopant diffusion down into the substrate. *See, e.g.*, EX-1005, 4:19-25; EX-2013, ¶ 52.

N and P regions and the solid lines represent the composite profile[7] on each side of the boundary between devices[.]" EX-1005, 5:62-65.

FIG. 12
(PRIOR ART)

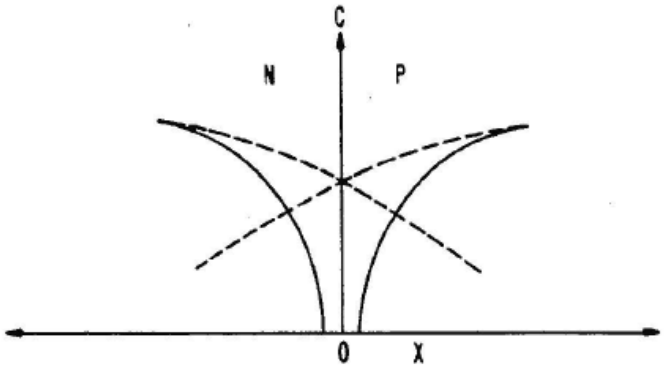

Id., Fig. 12.

FIG. 13

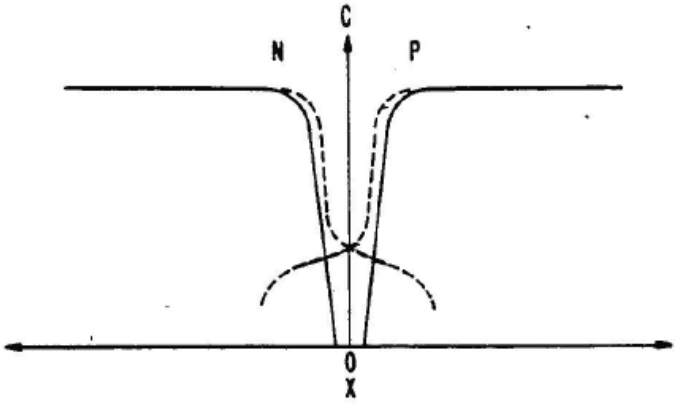

[7] When N-type and P-type dopants are introduced into overlapping areas, the dopants essentially offset one another, reducing the number of electrons and holes in those overlapping areas. EX-2013, ¶ 54.

Id., Fig. 13.

Payne's goal of increased packing density is very different from the goal of the '195 patent. EX-2013, ¶ 55. Claims 1 and 2 of the '195 patent are directed to "aid[ing] the movement of minority carriers from said surface layer to said substrate," *i.e.*, aiding minority carrier movement in a *downward*, *vertical* direction. *Id.* Payne does not discuss vertical carrier movement.

2. Payne Does Not Disclose Both the Recited "single drift layer disposed between the other surface of said surface layer and said substrate" <u>and</u> the "at least one well region disposed in said single drift layer" of Claim 1.

Payne discloses a simple twin-well structure, with wells (*i.e.*, "tubs"[8]) formed via two implant steps each. *See* EX-1005, Fig. 10. Each of the tubs has a high-concentration surface region formed via the second ion implantation step. *Id.* Petitioner contends that each of Payne's N and P tubs individually discloses both the "single drift layer" and "at least one well region disposed in said single drift layer" limitations of '195 Claim 1. *See* Petition, 20-22, 33-34.

Based on the discussion above in sections V.B and VI, a POSITA would recognize that the high-concentration surface regions of Payne are not themselves

[8] As Petitioner notes, in the context of the '195 patent and Payne, "the term 'tub' is synonymous with the term 'well.'" Petition, 9 n.3 (citing EX-1003, ¶ [37]).

tubs/wells, or "well regions." EX-2013, ¶ 73. They are instead part of the tubs, which extend up to the surface of the substrate. *See* Petition, 21-22 ("Although regions 17 and 20 are shown separately in Payne's figures, Payne discloses . . . that region 20 is formed from region 17 with some additional doping of boron ions.") (citations omitted); 4:53-59; EX-2013, ¶ 70. They are not distinct "well regions" because Payne's tubs are simply multiple-implant tubs. As discussed below, Payne's tubs and their respective high-concentration surface regions are formed with the *same dopants* and have the *same boundaries*, defined using a common set of masks. EX-2013, ¶¶ 65-71.

Indeed, as discussed above in sections V.B and VI, a POSITA would have understood, as of the September 3, 2004 priority date for the '195 patent, that a *single well* can be, and frequently is, formed by *multiple implants*, as confirmed by, *e.g.*, Wolf Vol. 4. EX-2013, ¶¶ 47-50. That multiple implants are used to form a well does not mean the well is a series of separate wells or well regions. *Id.*, ¶ 50.

Petitioner does not request that the Board construe the term "well region." Through its identification of elements in Payne purportedly satisfying the "well region" limitation, however, Petitioner contends that a *portion* of a well (or tub) is

a "well region" within the meaning of the '195 claims.[9] Petitioner dissects Payne's single, conventional P and N tubs into multiple distinct structures so that different portions of the same wells can satisfy multiple different claim limitations, *i.e.*, the "single drift layer disposed between the other surface of said surface layer and said substrate" *and* the "at least one well region disposed in said single drift layer." Because Petitioner's arguments regarding these limitations are based on an incorrect implied construction, they should be rejected.

As shown in Figure 10 below, Payne's pair of wells are side-by-side: an N-well (tub) (left) and a P-well (tub) (right).

FIG. 10

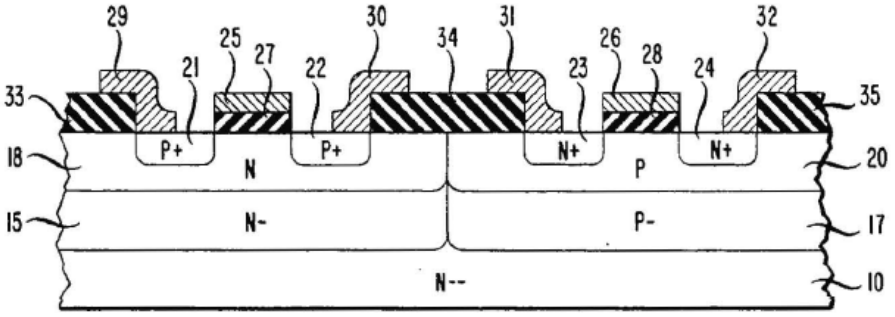

EX-1005, Fig. 10.

[9]Although Petitioner does not define "well region," in the context of this limitation, Petitioner asserts that "a tub region is another name used in the art by POSITAs to refer to a well region." Petition, 33.

Petitioner identifies two purported "single drift layers" in Figure 10, *i.e.*, the N tub on the left, and the P tub on the right.

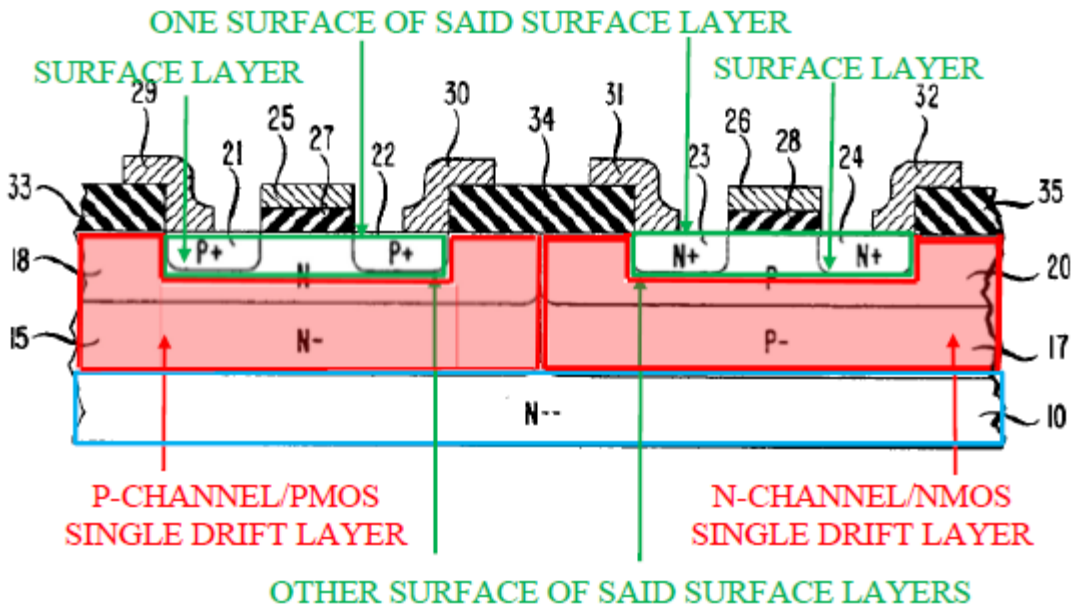

Petition, 21 (citing Payne Fig. 10) (Petitioner's annotations).[10]

Petitioner contends "Payne's single drift layers include at least the P- type second tub region 17, the P type surface region 20, the N- type first tub region 15, and the N type surface region 18, *which are each well regions*." Petition, 33 (citing EX-1003, ¶ [104]) (emphasis added); *see also id.*, 34 (citing Payne Figs. 10, 11).

[10] The "Second Mapping" diagram on page 46 of the Petition shows Petitioner's alternative mapping of the "single drift layer."

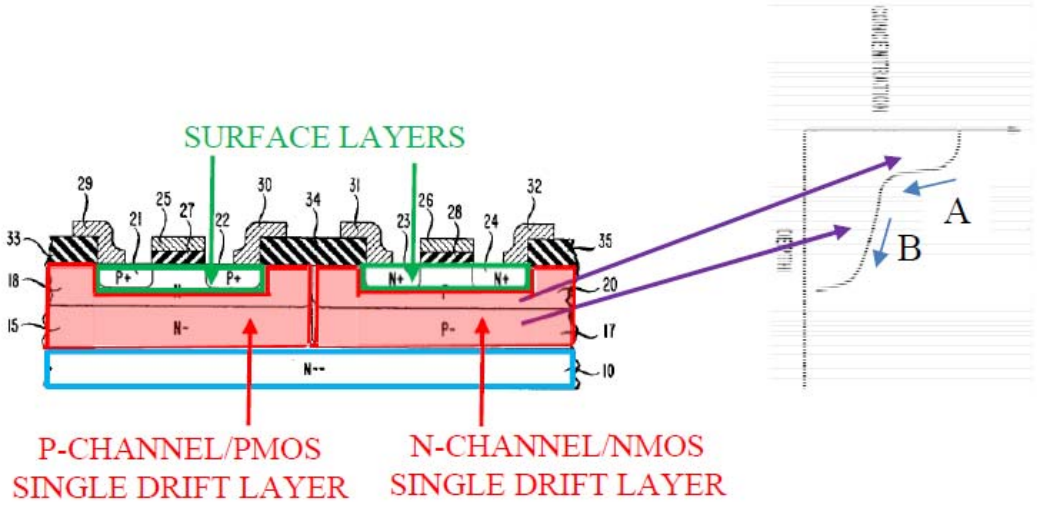

Petition, 34 (citing Payne Fig. 10) (Petitioner's annotations).

As noted above, from the perspective of a POSITA, each tub, *i.e.*, the N tub (15) and the P tub (17), including each tub's higher concentration surface region (18 and 20, respectively), is a *single well*. *See* EX-2013, ¶¶ 57-62. Each of the tubs in Payne is formed via a two-step implantation process to arrive at a particular doping profile. *See* Petition, 22 ("Although regions 17 and 20 are shown separately in Payne's figures, Payne discloses . . . that region 20 is formed from region 17 with some additional doping of boron ions.") (citations omitted). This is consistent with how multi-implant wells are formed, including the multi-implant wells contemplated by Rhodes, Wolf Vol. 4, and Wieczorek, as discussed above in sections V.B and VI. EX-2013, ¶¶ 47-50.

Payne's tubs and their respective high-concentration surface regions are formed via ion implantation with the *same dopants* and have the *same boundaries*,

defined using a common set of masks. EX-2013, ¶¶ 63-65. This process is described in detail below, and depicted with reference to Payne Figures 2, 5-7, and 9. *See id.*, ¶¶ 66-72.

"[A]s shown in FIG. 2, the structure was exposed to a first ion beam of impurities illustrated by arrows in the figure. In this example, the first ion beam comprises phosphorus ions[.]" EX-1005, 3:28-32. "The implantation thereby forms at the semiconductor surface a first tub region, 15, having the same conductivity type as the substrate but higher impurity concentration[.]" *Id.*, 3:35-39.

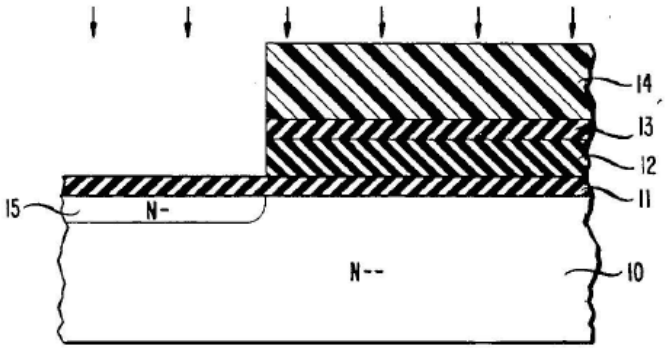

FIG. 2

Id., Fig. 2.

After masking the N- tub region, "as shown in FIG. 5, the structure is subjected to a second ion beam of impurities . . . . In this step, the ions are boron." *Id.*, 4:3-5. "The implantation forms a second tub region, 17, of conductivity type

designated 'P-' at the surface of the semiconductor adjacent to the 'N-'type region." *Id.*, 4:12-15.[11]

FIG. 5

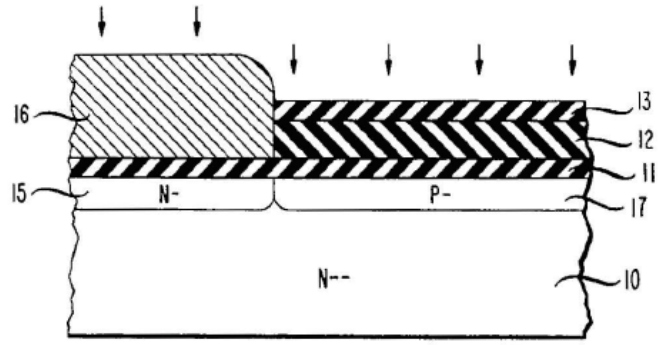

Id., Fig. 5.

"[B]oth n- and p- regions can [then] be driven into the bulk of the substrate to a desired depth as shown in FIG. 6," via heat treatment. *Id.* at 4:19-25.

FIG. 6

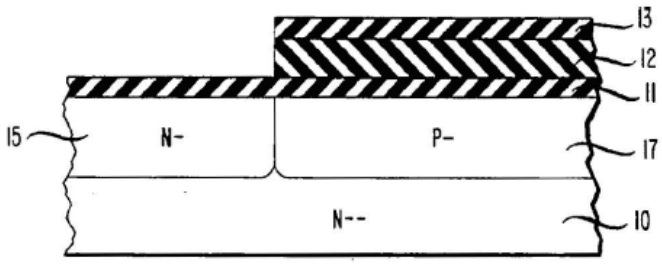

Id., Fig. 6.

[11] This is the manner in which Payne consistently uses the term "tub region." EX-1005, 1:60-68; 2:3-10; 2:14-18; 3:35-39; 4:12-14; 5:48-55; 6:35-51; 6:52-56; 6:60-64. Payne does not refer to the surface regions as "tub regions," or "tubs." EX-2013, ¶ 64.

"Next, as shown in FIG. 7, the structure is subject to a third ion beam of impurities which in this step again comprises phosphorus ions," producing "an 'N' type surface region, 18, *covering essentially the same area* as the 'N-' tub 15." *Id.*, 4:31-37 (emphasis added).

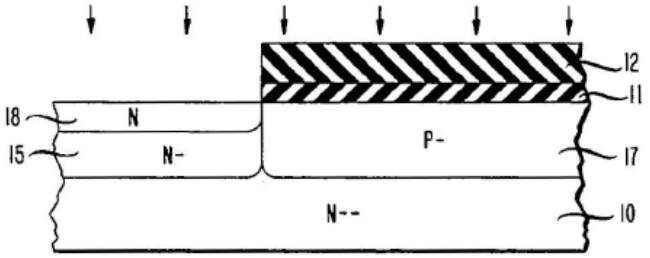

FIG. 7

Id., Fig. 7.

Payne refers to the N-type tub and the surface layer 18 in a manner that confirms both regions are part of the same "tub":

> It should be appreciated that in the formation of the oxide a portion of the semiconductor surface will be consumed. The N region 18 . . . will remain at the new surface. . . . [A]s a result of oxidation, there will be an indentation in the area of the N tub.

Id., 4:53-59. The N- tub 15 thus extends up to the surface of the semiconductor substrate; it simply has a higher dopant concentration at the surface.

"As shown in FIG. 9, the structure is then subjected to a fourth ion beam of impurities which in this case comprises boron ions." *Id.*, 4:63-65. "The beam thereby forms a surface region, 20, of P conductivity type at the surface of the semiconductor *covering essentially the same area* as the P-tub 17." *Id.*, 5:3-5 (emphasis added).

FIG. 9

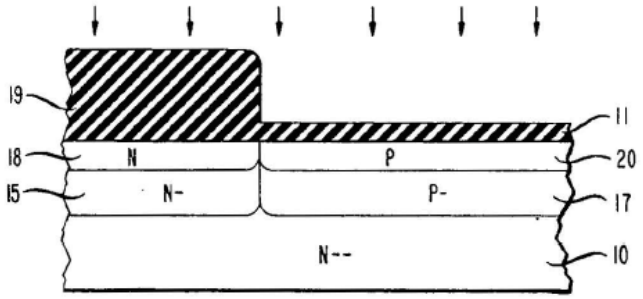

Id., Fig. 9.

Finally, after the structure is heated, "[t]he resulting impurity profile in both tubs thereby has the general shape illustrated in FIG. 11, where the abscissa is depth and the ordinate is impurity concentration." *Id.*, 5:12-17.

In light of the prior art, as demonstrated by Wolf Vol. 4 and Wieczorek, the prosecution history, and the meaning of "well region" from the perspective of a POSITA, a POSITA would not consider the higher concentration surface regions of Payne to be "well regions" distinct from the tubs in which they are found. EX-2013, ¶ 73. Rather, Payne's tubs are single wells formed by multiple implants. *Id.* A POSITA would recognize that Payne does not and cannot disclose *both* a

"single drift layer disposed between the other surface of said surface layer and said substrate" *and* "at least one well region disposed in said single drift layer." *Id.*[12]

3. Petitioner Fails to Demonstrate that Payne Discloses the Recited "First" and "Second" "Static Unidirectional Electric Drift Field[s] to Aid the Movement of Minority Carriers from Said Surface Layer to Said Substrate."

Payne does not discuss electric fields at all. Petitioner instead contends that "a POSITA would have readily understood that a downward slope of a graded doping concentration creates a unidirectional electric drift field pointing towards the substrate." Petition, 29. But a petitioner must provide a basis in fact or technical reasoning to reasonably support the determination that the allegedly inherent characteristic necessarily flows from the teachings of the applied prior art. *Ex parte Levy*, 17 U.S.P.Q. 2d 1461, 1464 (B.P.A.I. 1990). Because Petitioner relies on nothing more than a rough drawing, as discussed below, Petitioner fails to carry its burden. Petitioner does not establish a reasonable likelihood that Payne anticipates or renders obvious Claims 1 or 2.

Specifically, Petitioner has not satisfied its burden to demonstrate that Payne discloses the claimed "first" and "second" "static unidirectional electric drift

[12] Petitioner also contends with no analysis or support that "the multiple different gradients in Payne's tub regions . . . render obvious feature [1.7][.]" Petition, 35.

field[s] to aid the movement of minority carriers from said surface layer to said substrate." Petitioner relies primarily on the downward-sloping dopant concentration drawing in Payne Figure 11, shown below, supplemented only by material from the prosecution history. Petitioner notes the downward slope toward the substrate and contends "[s]uch a slope, as acknowledged by the Patent Owner, generates a unidirectional electric drift field." Petition, 27-28 (internal citation omitted). Petitioner further states that "[i]f the graded dopant concentration slope points in one direction, e.g., from the surface to the substrate, the electric drift field is unidirectional." *Id.*, 26 (citing EX-1002, 115, 116). Finally, Petitioner relies on the following statement: "Depending on the particular slope of the graded concentration of dopant, all minority carriers are either swept 'down' (from the surface to the substrate) or 'up' (from the substrate to the surface layer)." *Id.* (citing EX-1002, 82).

FIG. 11

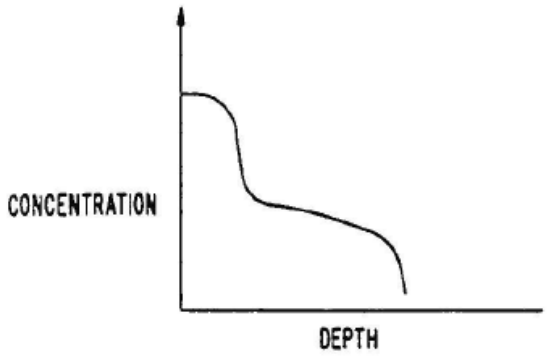

EX-1005, Fig. 11.

Petitioner's entire analysis is based on a figure that Payne acknowledges is an approximation. Payne explains that after its structure is heated, "[t]he resulting impurity profile in both tubs thereby has the *general shape illustrated in FIG. 11*[.]" EX-1005, 5:12-17 (emphasis added). In other words, Figure 11 is nothing more than a rough drawing. The axes in Figure 11 do not contain units or numbers, and Payne provides no actual data regarding its doping gradient. *See Hockerson-Halberstadt, Inc. v. Avia Group International, Inc.*, 222 F.3d 951, 956 (Fed. Cir. 2000) ("Absent any written description in the specification of quantitative values, arguments based on measurement of a drawing are of little value."). Thus, even if it is true that the *particular slope* of a doping gradient determines carrier movement, Figure 11 is inadequate for determining Payne's doping gradient or electric fields, or the resulting impact on minority carrier movement. Institution should be denied.

4. Petitioner Fails to Establish a Reasonable Likelihood that Payne Anticipates or Renders Obvious Claim 2.

Because Petitioner fails to establish that Payne anticipates or renders obvious Claim 1, Petitioner also fails to establish that Payne anticipates or renders obvious dependent Claim 2.

B. Petitioner Does Not Establish a Reasonable Likelihood that Wieczorek Anticipates Claim 1 or 2 (Ground 2a) or Renders Obvious Claim 1 or 2 (Ground 2b).

Petitioner contends that Wieczorek anticipates Claims 1 and 2 (Ground 2a) or renders obvious claims 1 and 2 (Ground 2b). Petitioner fails to establish a reasonable likelihood that Wieczorek does either.

1. Overview of Wieczorek

Wieczorek is directed to a method for forming a semiconductor device with "a retrograde dopant profile," in which a channel layer is formed after "well structures" have been formed in a semiconductor substrate via ion implantation. EX-1006, ¶ [0015]. Such a "retrograde channel doping profile" can be used to lower the concentration of scattering centers so "the overall conductivity in the channel is enhanced." *Id.*, ¶ [0006]. As Petitioner notes, Wieczorek is directed to "improv[ing] carrier mobility in a transistor channel." Petition, 60.

Wieczorek's goal of improving lateral carrier mobility in the channel region is very different from the goal of the '195 patent. EX-2013, ¶¶ 75-76. Claims 1 and 2 of the '195 patent are directed to aiding minority carrier movement in *downward*, *vertical* direction. *Id.* Wieczorek does not discuss vertical carrier movement.

2. Wieczorek Does Not Disclose Both the Recited "single drift layer disposed between the other surface of said surface layer and said substrate" <u>and</u> the "at least one well region disposed in said single drift layer."

Like Payne, Wieczorek discloses a simple twin-well structure, with well structures 310 and 320 formed through multiple implant steps each. EX-1006, ¶¶ [0028] ("[T]he P-well structure 310 and the N-well structure 320 are defined by ion implantation, wherein several implantation steps may be used as it is described with reference to FIG. 1a."), [0029] (describing N-well structure 320 formation via a first and second implantation of phosphorus ions and a third implantation of phosphorus or arsenic ions). As discussed in detail below, Wieczorek explains that the multiple implants used to form N-well structure 320 result in "implantation portions," described with reference to Figure 1a, reproduced below, (*Id.*, ¶¶ [0007], [0028]), and during subsequent heat treatment, "the boundaries between the respective implantation portions will smear out more intensively so that the vertical dopant profile . . . will become more indefinite." *Id.*, ¶ [0010]; EX-2013, ¶ 81. Petitioner contends that Wieczorek's N-well structure 320 discloses both the "single drift layer" and "at least one well region disposed in said single drift layer" limitations of '195 Claim 1. Petition, 71-72, 80-81.

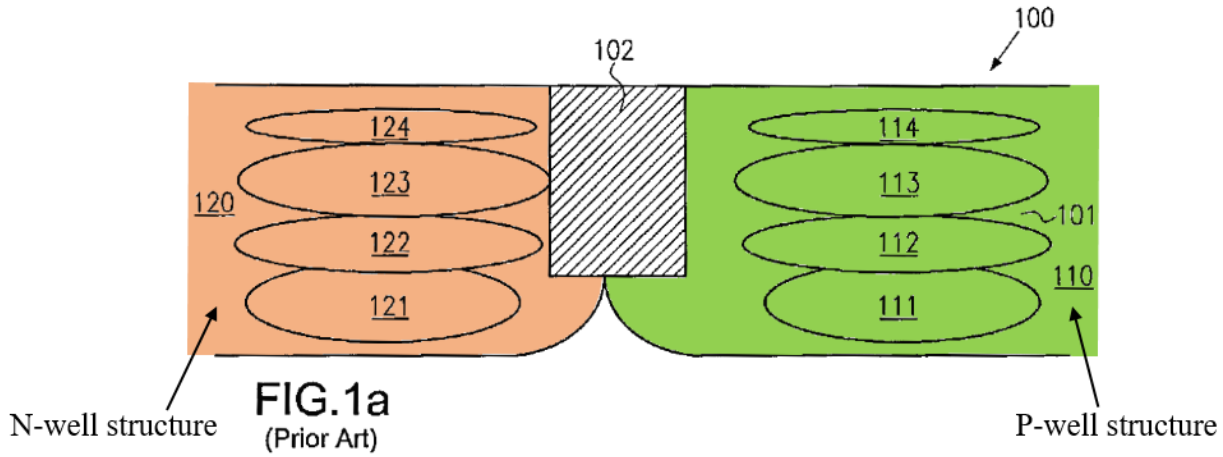

EX-1006, Fig. 1a (annotations added).

As discussed in sections V.B and VI above, the portions of N-well structure 320 that are formed via the respective multiple implant steps are not themselves wells, or "well regions." EX-2013, ¶ 90. These "implantation portions" are instead just that—*portions* of N-well structure 320. *Id.* They are not distinct "well regions" because, as discussed in further detail below, all of the implantation steps used to form N-well structure 320 are formed with the *same dopant types* and have the *same boundaries*. *Id.*, ¶¶ 90-91.

Indeed, as discussed above in sections V.B and VI, a POSITA would have understood as of September 3, 2004 that a *single well* can be formed by *multiple implants*. *See, e.g.*, EX-2012, 184, 187. That multiple implants are used to form a well does not mean the well is a series of separate wells or well regions. EX-2013, ¶¶ 47-50.

As discussed above in section VI, Petitioner does not request that the Board construe the term "well region." Through its identification of elements in Wieczorek purportedly satisfying the "well region" limitation, however, Petitioner contends that an "indefinite" portion of N-well structure 320 is a "well region" within the meaning of the '195 claims. *See* EX-1006, ¶ [0010] (noting, in the context of analogous N-well structure 120, that "diffusion takes place and the boundaries between the respective implantation portions will smear out more intensively so that the vertical dopant profile within the P-well structure 110 and the N-well structure 120 will become more *indefinite*.") (emphasis added); EX-2013, ¶ 87. Wieczorek even acknowledges that, "due to the nature of the implantation process, the boundaries of the implantation portions for defining the P-well structure 110 and the N-well structure 120 *are not sharp boundaries* as shown in FIG. 1a but, instead, have *gradual transitions*." EX-1006, ¶ [0008] (emphases added). Petitioner dissects Wieczorek's single, conventional N-well structure into multiple distinct structures so that different portions of the same well can satisfy multiple different claim limitations, *i.e.*, the "single drift layer disposed between the other surface of said surface layer and said substrate" *and* the "at least one well region disposed in said single drift layer." *See* EX-2013, ¶¶ 85-89. Because Petitioner's arguments regarding these limitations are based on an incorrect implied construction, they should be rejected.

Petitioner contends that "Wieczorek discloses a single drift layer in the form of N-well structure 320," (Petition, 71), shown in Figure 3f below (left).

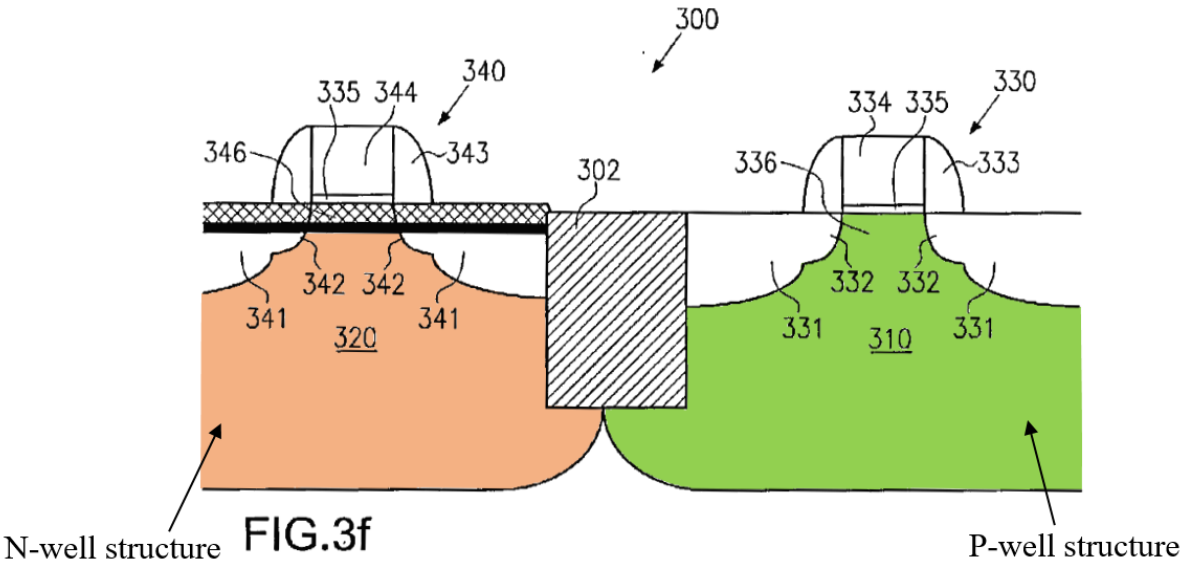

Id., Fig. 3f (annotations added).

Petitioner depicts the purported "single drift layer" in Figures 3f and 4 below, outlined in red. Petitioner argues the "N-well structure 320 comprises dopants arranged within the respective wells as shown in Wieczorek's FIG. 4." *Id.*

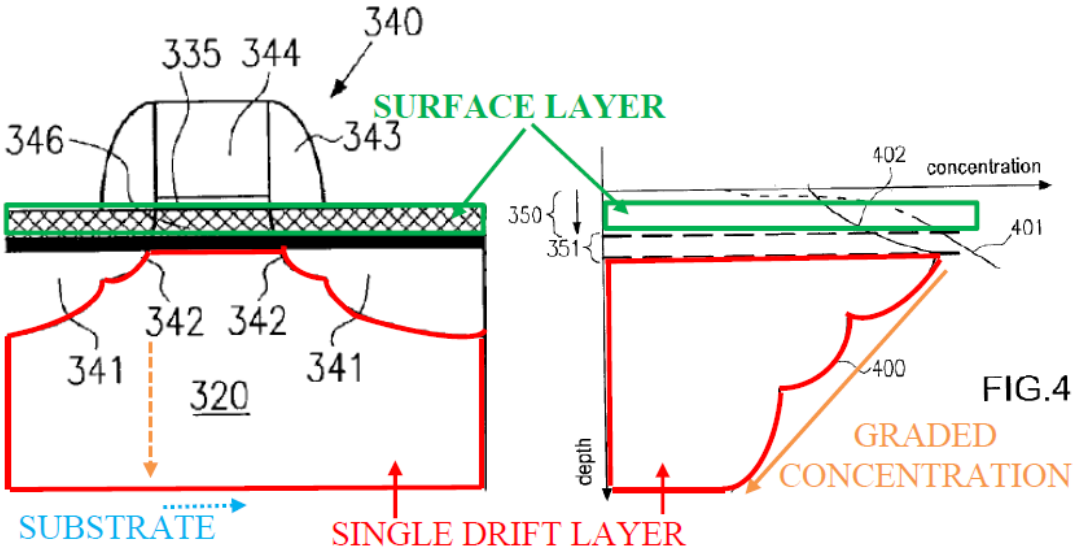

Petition, 73 (Petitioner's annotations).

Petitioner contends "Wieczorek teaches that the N-well structure 320 includes a plurality of indefinite, implanted portions." Petition, 80 (citations omitted). Regarding the claimed "at least one well region," Petitioner contends that "[a]n example of a well region in the N-well structure 320 corresponding to the implanted portion is shown in FIGS. 3f and 4 . . . . Specifically, the beige colored region [added by Petitioner] corresponds to at least one well region in the N-well structure 320 in FIG. 3f and . . . FIG. 4." *Id.* (citing EX-1003, ¶ [146]).

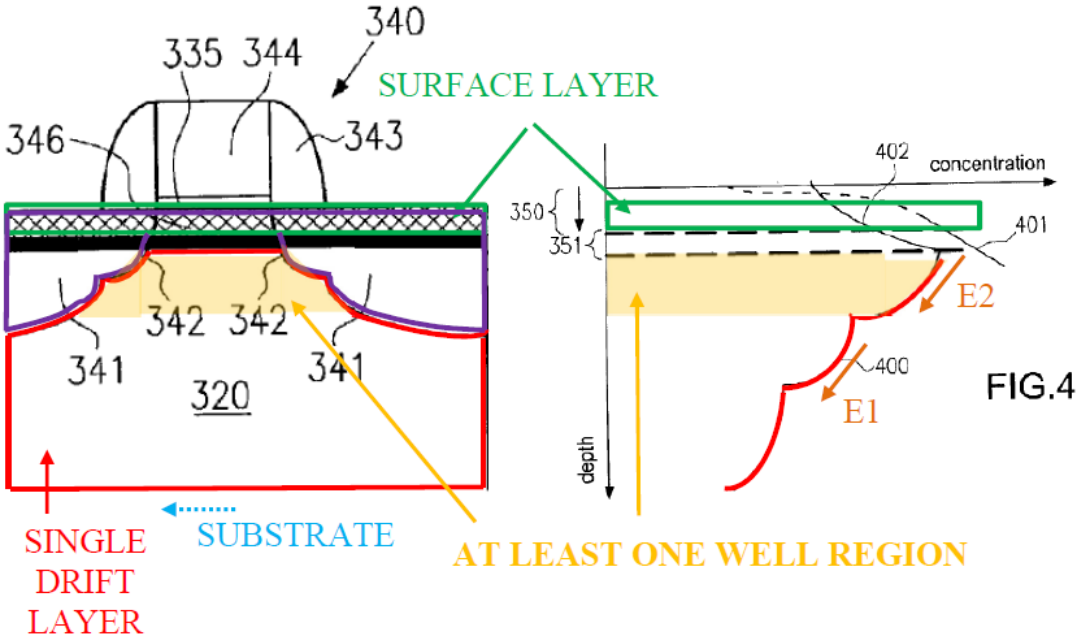

Petition, 81 (citing EX-1006, Figs. 3f, 4) (Petitioner's annotations).

As noted above, from the perspective of a POSITA, the N-well structure 320 is a *single well*. EX-2013, ¶¶ 90, 98. Just like Payne's tubs, the N-well structure 320 is formed via a multi-step implantation process to arrive at a particular doping

profile. *Id.*; *see also* EX-1006, ¶ [0029] (describing three implantations to form N-well structure 320). This is consistent with how multi-implant wells are formed, including the multi-implant wells contemplated by Rhodes and Wolf Vol. 4, as discussed above in sections V.B and VI. EX-2013, ¶ 89. Indeed, Wieczorek is a good example of the "well engineering" used to form a "modulated well." EX-2012, 184, 187; EX-2013, ¶ 89.

Wieczorek's description of the well formation process for N-well structure 320 indicates that all of the implantation steps have the same footprint. EX-2013, ¶ 92. In other words, a POSITA would recognize that Wieczorek's multi-step implantation process is performed on the same area of the chip, defined by the lateral boundaries of N-well structure 320, such that all of the "implantation portions" have the *same boundaries*. *See, e.g.,* EX-1006, ¶ [0028] ("[T]he P-well structure 310 and the N-well structure 320 are defined by ion implantation, wherein several implantation steps may be used as it is described with reference to FIG. 1a."); EX-2013, ¶ 92. The shallow trench isolation 302, which "separate[s] the P-well structure 310 and the N-well structure 320," defines one of those implantation boundaries. EX-1006, ¶ [0027]; EX-2013, ¶ 92.

Wieczorek's well formation implantation steps, all of which are n-type dopants, are performed in sequence, with no intervening masking steps or other steps that would result in different boundaries for different implants. EX-2013,

¶ 93. For example, Wieczorek describes an embodiment in which these implantations are performed in a series of consecutive steps, *i.e.*:

> [T]he N-well structure 320 is defined by a first implantation with phosphorus ions with an energy of 400-800 keV (kilo electron volts) with a dose of $2\times10^{13} – 2\times10^{14}$ particles per square centimeter. In a second implantation step, phosphorus ions are implanted into the N-well structure 320 with an energy of 150-250 keV with a dose of $2\times10^{12} – 5\times10^{13}$ particles per square centimeter, followed by a further phosphorus implantation step with an energy of 50-100 keV with a dose of $2\times10^{12} – 5\times10^{13}$ particles per square centimeter. Finally, an implantation step with arsenic ions [*i.e.*, also n-type] with an energy of 20-50 keV with a dose of $1\times10^{12} – 1\times10^{13}$ may be performed to coarsely adjust the threshold voltage of the transistor element to be formed in and on the N-well region 320.

Id., ¶ [0029].[13]

[13] Wieczorek discloses another embodiment in which "the final threshold voltage implantation may be omitted at this stage of the manufacturing process and may be carried out at a later stage[.]" EX-1006, ¶¶ [0029]-[0030]. Even in this embodiment, a POSITA would recognize that Wieczorek does not describe using a different mask to define a different boundary for the threshold voltage implantation. *See id.*, ¶ [0035] (describing threshold voltage adjust implant); EX-2013, ¶ 94.

As shown in Figure 3a below, N-well structure 320 and P-well structure 310 are formed before any of the other structures depicted in Figures 3b-3f are formed, further indicating to a POSITA that all of the implantation portions in N-well structure 320 have the same boundaries. EX-2013, ¶ 96.

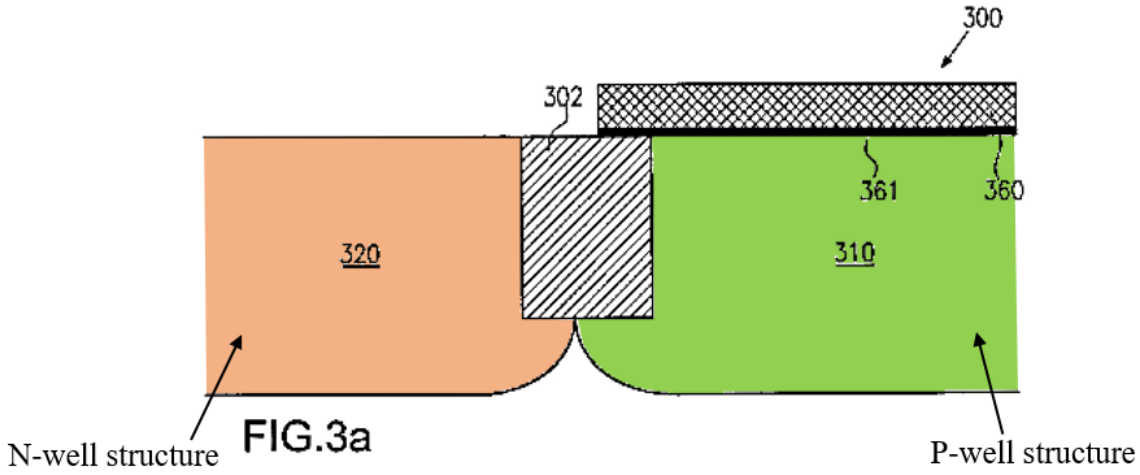

EX-1006, Fig. 3a (annotations added).

After implantation, a heat treatment is performed "to activate the dopant atoms" in the wells "cure lattice damage created during the implantation steps." *Id.*, ¶ [0030]; EX-2013, ¶ 97. This heating results in "[a] curve indicated [in Figure 4] as 400 represents the dopant concentration of the N-well structure 320 that exhibits the typical '*smeared out*' distribution as in a conventionally manufactured device." EX-1006, ¶ [0043] (emphasis added); *see also id.*, ¶¶ [0008] ("[T]he boundaries of the implantation portions . . . have *gradual transitions*.") (emphasis added), [0010] (during heat treatment, "the boundaries between the respective implantation portions will smear out more intensively so that the vertical dopant

profile within the P-well structure 110 and the N-well structure 120 will become more *indefinite*.") (emphasis added).

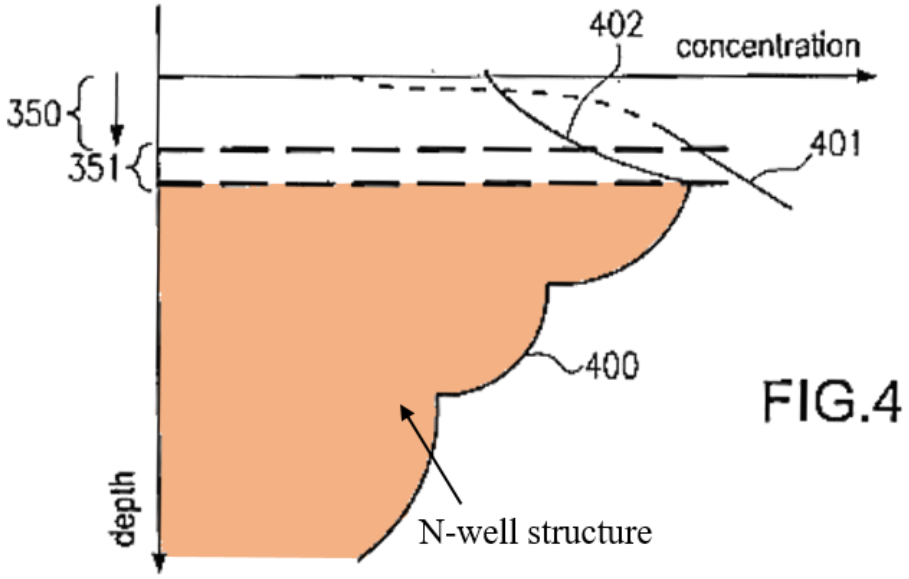

Id., Fig. 4 (annotations added).

In light of the prior art, as demonstrated by Wolf Vol. 4 and Wieczorek itself, the prosecution history, and the meaning of "well region" from the perspective of a POSITA, a POSITA would not consider the individual implantation portions of Wieczorek to be "well regions" distinct from the N-well structure in which it is found. EX-2013, ¶ 98. Rather, Wieczorek's N-well structure is a single well formed by multiple implants. *Id.* A POSITA would thus recognize that Wieczorek does not and cannot disclose *both* a "single drift layer disposed between the other surface of said surface layer and said substrate" *and* "at least one well region disposed in said single drift layer." *Id.*

3. Petitioner Fails to Establish a Reasonable Likelihood that Wieczorek Anticipates or Renders Obvious Claim 2.

Because Petitioner fails to establish that Wieczorek anticipates or renders obvious Claim 1, Petitioner also fails to establish that Wieczorek anticipates or renders obvious dependent Claim 2.

VIII. CONCLUSION

For the foregoing reasons, the Petition fails to establish a reasonable likelihood that any of the challenged claims are unpatentable.

Dated: April 14, 2020

Respectfully submitted,

/Cyrus A. Morton/

Cyrus A. Morton
Registration No. 44,954
ROBINS KAPLAN LLP
2800 LaSalle Plaza
800 LaSalle Avenue
Minneapolis, MN 55402
Telephone: 612-349-8500
Facsimile: 612-339-4181

Attorney for Patent Owner Greenthread LLC

WORD COUNT CERTIFICATION

I hereby certify that this Patent Owner Preliminary Response complies with the word count limit, and contains 13,998 words.

I further certify that, in preparation of this document, I used Microsoft Word, Version 2016, and that this word processing program has been applied specifically to include all text, including headings, footnotes, and quotations in the following word count.

Dated: April 14, 2020

Respectfully submitted,

/Cyrus A. Morton/

Cyrus A. Morton
Registration No. 44,954
ROBINS KAPLAN LLP
2800 LaSalle Plaza
800 LaSalle Avenue
Minneapolis, MN 55402
Telephone: 612-349-8500
Facsimile: 612-339-4181

Attorney for Patent Owner
Greenthread LLC

CERTIFICATE OF SERVICE

I hereby certify that on April 14, 2020 a copy of this Patent Owner Preliminary Response, including all accompanying attachments, appendices, and exhibits, has been served in its entirety via e-mail (as was consented to by Petitioners) on Petitioners at the following e-mail addresses:

Counsel for Petitioner Samsung Electronics, Inc.

FISH & RICHARDSON P.C.
IPR39843-0069IP1@fr.com
PTABInbound@fr.com
axf-ptab@fr.com
holt2@fr.com

Dated: April 14, 2020

Respectfully submitted,

/Cyrus A. Morton/

Cyrus A. Morton
Registration No. 44,954
ROBINS KAPLAN LLP
2800 LaSalle Plaza
800 LaSalle Avenue
Minneapolis, MN 55402
Telephone: 612-349-8500
Facsimile: 612-339-4181

Attorney for Patent Owner Greenthread LLC