Trials@uspto.gov
571-272-7822

Paper __
Entered: _____, 2026

PUBLIC VERSION

UNITED STATES PATENT AND TRADEMARK OFFICE

_____

BEFORE THE PATENT TRIAL AND APPEAL BOARD

_____

SEMICONDUCTOR COMPONENTS INDUSTRIES, LLC,
Petitioner,

v.

GREENTHREAD, LLC,
Patent Owner.

_____

IPR2024-00266
Patent 8,421,195 B2

_____

Before GRACE KARAFFA OBERMANN, DONNA M. PRAISS, and STEPHEN E. BELISLE, *Administrative Patent Judges*.

PRAISS, *Administrative Patent Judge*.

JUDGMENT
Final Written Decision
Determining All Challenged Claims Unpatentable
35 U.S.C. § 318(a)

I. INTRODUCTION

Semiconductor Components Industries, LLC d/b/a onsemi ("Petitioner" or "onsemi") filed a Petition requesting *inter partes* review of claims 1–6 of U.S. Patent No. 8,421,195 B2 (Ex. 1001, "the '195 patent"). Paper 1 ("Pet."). Greenthread, LLC ("Patent Owner") filed a Preliminary Response to the Petition. Paper 13 ("Prelim. Resp."). With authorization, Petitioner subsequently filed a Preliminary Reply (Paper 15, "Prelim. Reply") and Patent Owner filed a Preliminary Sur-reply (Paper 18, "Prelim. Sur-reply"). Upon consideration of these papers, the Board instituted *inter partes* review as to all challenged claims (Paper 22, "Inst. Dec.").

During the course of trial, Patent Owner filed a Patent Owner Response (Paper 32, "PO Resp."); Petitioner filed a Reply to the Patent Owner Response (Paper 41, "Pet. Reply"); and Patent Owner filed a Sur-reply (Paper 45, "PO Sur-reply"). Petitioner filed the Declaration of Travis Blalock, Ph.D. (Ex. 1003) in support of the Petition. Patent Owner filed the Declarations of Alexander Glew, Ph.D. (Ex. 2064) and Mohan Rao (Ex. 2078) in support of its Response. The parties also filed transcripts of the depositions of Dr. Blalock (Ex. 2058) and Dr. Glew (Ex. 1054).

On April 29, 2025, the one-year statutory period for issuing the final determination in this inter partes review was extended for 6 months for good cause. Paper 51.

An oral hearing was held on May 6, 2025, and a transcript of the hearing is included in the record. Paper 64 ("Tr.").

On June 27, 2025, the Board *sua sponte* ordered discovery consistent with related proceedings IPR2023-01242, -01243, and -01244 and authorized post-hearing briefs limited to the parties' privity dispute relating to an alleged relationship between Petitioner and a non-party, Intel

Corporation ("Intel"). Paper 63 ("Disc. Order"). Petitioner produced a Declaration of Matthew Murphy (Ex. 2914), which Patent Owner filed along with Mr. Murphy's deposition transcript (Ex. 2915). Patent Owner filed a Post-Hearing Privity Brief. Paper 68 ("PO Privity Br."). Petitioner filed a Responsive Post-Hearing Brief. Paper 71 ("Pet. Privity Resp."). Patent Owner filed a Reply Post-Hearing Brief. Paper 72 ("PO Privity Reply").

A telephonic oral hearing on the privity dispute was held on September 18, 2025, and a transcript of the hearing is included in the record. Ex. 1062 ("Privity Tr.").

For the reasons discussed below, we determine Petitioner has established by a preponderance of the evidence that claims 1–6 of the '195 patent are unpatentable.

A. *Related Matters*

The parties indicate that the '195 patent is at issue in the following proceedings:

Greenthread, LLC v. Cirrus Logic, Inc., No. 1:23-cv-00369 (W.D. Tex. filed March 31, 2023);

Greenthread, LLC v. Texas Instruments Inc., No. 2:23-cv-00157 (E.D. Tex. filed April 6, 2023);

Greenthread, LLC v. OSRAM GmbH, No. 2:23-cv-00179 (E.D. Tex. filed April 19, 2023);

Greenthread, LLC v. OmniVision Technologies, Inc., No. 2:23-cv-00212 (E.D. Tex. filed May 10, 2023);

Greenthread, LLC v. Monolithic Power Systems, Inc., No. 1:23-cv-00579 (D. Del. filed May 26, 2023); and

Cirrus Logic et al. v. Greenthread, LLC, IPR2024-00018, before the Patent Trial and Appeal Board, filed October 27, 2023.

Pet. 1–2; Paper 4, 2–3 (Patent Owner's mandatory notices).

Petitioner further indicates that "U.S. Patent Nos. 11,121,222 and 10,510,842 (child patents to the '195 patent), but not the '195 patent itself, are the subject of" other proceedings:

Greenthread, LLC v. ON Semiconductor Corporation and Semiconductor Components Industries, LLC, No. 1:23-cv-00443 (D. Del. filed April 21, 2023); and

Semiconductor Components Industries, LLC v. Greenthread, LLC, IPR2023-01242, -01243, -01244, before the Patent Trial and Appeal Board, filed July 27, 2023.

Pet. 3.

B. *Real Parties-in-Interest*

Petitioner identifies itself and ON Semiconductor Corporation as the real parties-in-interest. Pet. 1. Patent Owner identifies itself as the real party-in-interest. Paper 4, 2.

C. *The '195 Patent*

The '195 patent, titled "Semiconductor Devices with Graded Dopant Regions," issued on April 16, 2013. Ex. 1001, codes (45), (54). The '195 patent "relates to all semiconductor devices and systems." Ex. 1001, 1:13–14. According to the '195 patent, in bipolar junction transistors, "[e]fforts have been made in graded base transistors to create an 'aiding drift field' to enhance the diffusing minority carrier's speed from emitter to collector" versus the standard "uniformly doped" base. Ex. 1001, 1:32–36. This improvement has not been implemented in "most semiconductor

devices, including various power MOSFETs [and] IGBT's," which "still use a uniformly doped drift epitaxial region in the base." Ex. 1001, 1:36–40. The invention of the '195 patent implements graded dopant concentration in these devices, which causes "[t]wo important performance enhancements." Ex. 1001, 2:51–3:9. These include sweeping electrons "from source to drain rapidly" and simultaneously causing holes to "be recombined closer to the n^+ buffer layer," which "can improve t(on) and t(off) in the same device." Ex. 1001, 3:10–13.

Figure 1 of the '195 patent is reproduced below.

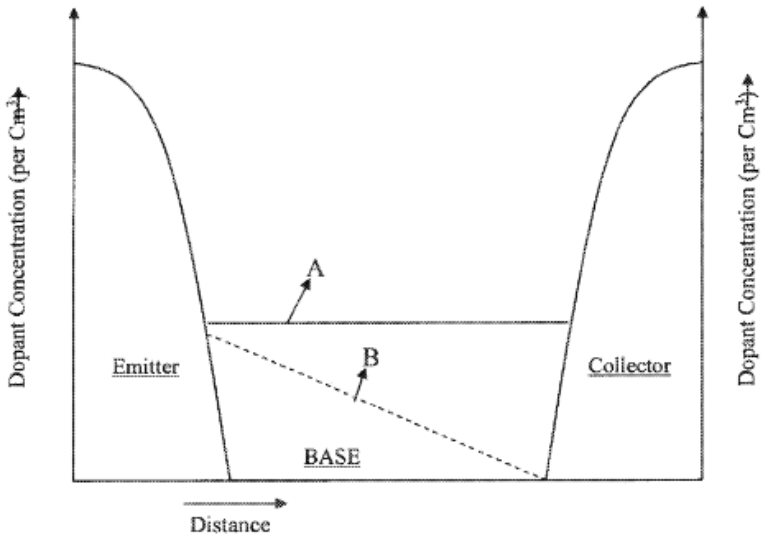

Figure 1 is labeled "Prior Art" and "illustrates the relative doping profiles of emitter, base, and collector, for the two most popular bipolar junction transistors: namely, A–uniform base, and B–graded base." Ex. 1001, 2:13–15.

Figure 3(a) of the ’195 patent is reproduced below.

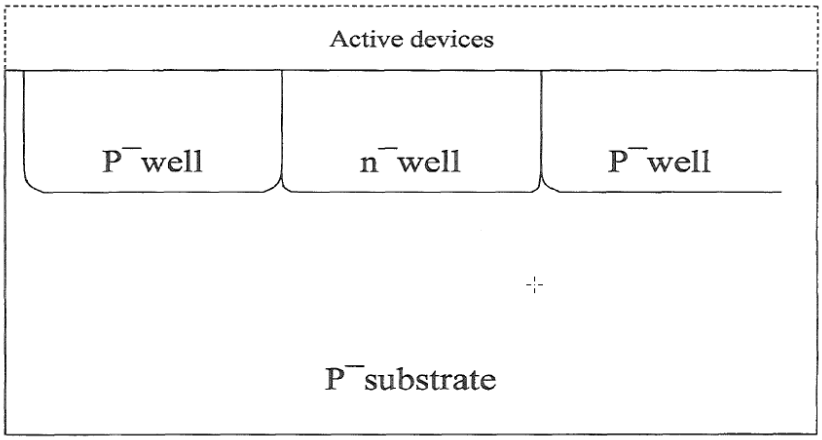

Figure 3(a) is labeled “Prior art” and shows a cross-sectional view of a “commonly used CMOS silicon substrate with two wells (one n-well in which p-channel transistors are subsequently fabricated, and, one p-well in which n-channel transistors are subsequently fabricated).” Ex. 1001, 2:18–23, Fig. 3(a).

Figure 5(a) of the ’195 patent is reproduced below.

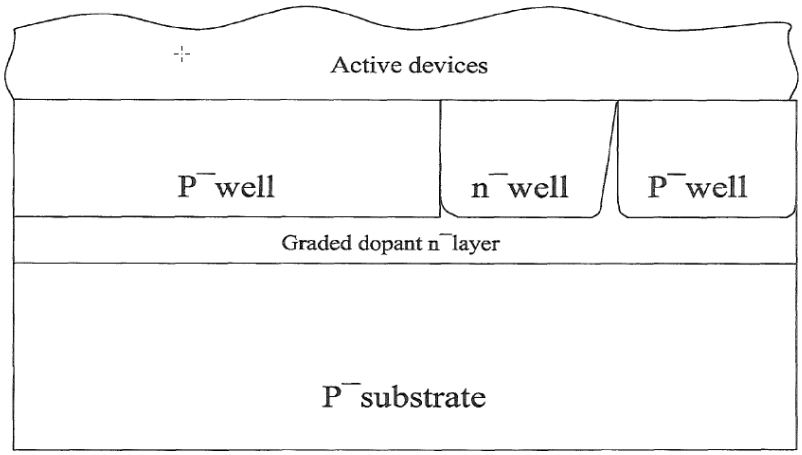

Figure 5(a) illustrates a cross section of “a MOS silicon substrate with two wells, and, an underlying layer using embodiments of the invention.” Ex. 1001, 2:27–29. According to the ’195 patent, “[s]purious minority carriers can be generated by clock switching in digital VSLI logic and

memory IC'S," and "[t]hese unwanted carriers can discharge dynamically-held 'actively held high' nodes," and serve to degrade performance of various types of devices, including digital imaging ICs. Ex. 1001, 3:17–25. The '195 patent further explains that "a novel technique has been described here by creating a drift field to sweep these unwanted minority carriers into the substrate as quickly as possible, from the active circuitry at the surface." Ex. 1001, 3:30–33. In particular, "[i]n a preferred embodiment, the subterranean n-layer has a graded donor concentration to sweep the minority carriers deep into the substrate." Ex. 1001, 3:33–35.

D. *Illustrative Claim*

Of the challenged claims, claim 1 is independent and is reproduced below.

> 1. [pre] A CMOS Semiconductor device comprising:
> [1.1] a surface layer;
> [1.2] a substrate;
> [1.3] an active region including a source and a drain, disposed on one surface of said surface layer;
> [1.4] a single drift layer disposed between the other surface of said surface layer and said substrate, said drift layer having a graded concentration of dopants extending between said surface layer and said substrate,
> [1.5] said drift layer further having a first static unidirectional electric drift field to aid the movement of minority carriers from said surface layer to said substrate; and
> [1.6] at least one well region disposed in said single drift layer, said well region having a graded concentration of dopants and a second static unidirectional electric drift field to aid the movement of minority carriers from said surface layer to said substrate.

Ex. 1001, 4:13–29 (bracketed designations added by Petitioner).

E. *Asserted Grounds of Unpatentability*

Petitioner asserts the following grounds of unpatentability (Pet. 6):[1]

Claim(s) Challenged	35 U.S.C. §	Reference(s)
1, 2, 4–6	103	Payne[2]
1–6	103	Sakai,[3] Kawagoe[4]
2, 3	103	Payne, Wolf[5]
3	103	Payne, Parrillo[6]
2	103	Sakai, Kawagoe, Wolf

II. PRIVITY: TIMELINESS OF PETITION UNDER 35 U.S.C. § 315(b)

Pursuant to 35 U.S.C. § 315(b), "[a]n inter partes review may not be instituted if the petition requesting the proceeding is filed more than 1 year after the date on which the petitioner, real party in interest, or privy of the petitioner is served with a complaint alleging infringement of the patent."

During the pre-institution phase of this proceeding, Patent Owner argued that the Petition should be dismissed because it is untimely. Prelim. Resp. 15. In particular, Patent Owner argued that Petitioner is in privity with [redacted], Intel Corp. ("Intel"), and [redacted] (collectively "Licensees"), who Patent Owner asserted are time-barred under 35 U.S.C. § 315(b) and licensed under the '195 patent. Prelim. Resp. 23–36.

---

[1] The Leahy-Smith America Invents Act ("AIA"), Pub. L. No. 112–29, took effect on March 16, 2013. The '195 patent claims priority to an application filed September 3, 2004. Ex. 1001, code (60). Thus, we apply the pre-AIA version of § 103. *See* Pet. 5 n.1.
[2] US 4,684,971, issued Aug. 4, 1987 (Ex. 1005).
[3] US 4,907,058, issued Mar. 6, 1990 (Ex. 1006).
[4] US 6,043,114, issued Mar. 28, 2000 (Ex. 1007).
[5] Stanley Wolf & Richard N. Tauber, *Silicon Processing for the VLSI Era*, Vols. 1–4 (Lattice Press 2000) (Ex. 1008).
[6] US 4,435,896, issued Mar. 13, 1984 (Ex. 1025).

Patent Owner advanced several theories supporting its privity arguments, including that Petitioner serves as an "agent" of Licensees by exercising their "have made" rights under the license, that Petitioner is a beneficiary of the Licensee's agreements related to accused products, that Petitioner and Licensees "are 'preceding and succeeding owners of' the licensed and/or infringing products," that Petitioner's licensed sales encumber otherwise infringing articles, and Petitioner's indemnity obligations to Licensees further support a finding of privity. Prelim. Resp. 15–36.

In the Institution Decision, the Board determined that Patent Owner had not provided a sufficient factual basis upon which to question Petitioner's representation that it is not time-barred, or that Petitioner and [redacted] Intel, or [redacted] were, in fact, privies, based on any of its theories regarding privity. Inst. Dec. 25–36. We incorporate that analysis here, and reconsider Patent Owner's contentions to the extent warranted by subsequent, post-hearing argument and evidence. *See Achates Reference Publ'g Inc. v. Apple Inc.,* 803 F.3d 652, 658 (Fed. Cir. 2015) ("The Board's reconsideration of the time-bar [in the final determination] is 'still fair[ly] characterize[ed] as part of the decision to institute.'").

Subsequent to the Institution Decision, Patent Owner asserts that (1) control of prior litigation is not required to establish privity (PO Resp. 44–46); (2) even though Petitioner bears the burden to show that the Petition was timely—namely, that Petitioner is not in privity with [redacted],[7] Intel, or

[7] During the pre-institution phase of this proceeding, Patent Owner asserted a privity relationship between Petitioner and [redacted] but identified no evidence sufficient to support a finding that Petitioner provided a product

[redacted]–Petitioner has not attempted to carry its burden (*id.* at 46–50); (3) evidence of record shows that the petition is time-barred (*id.* at 51–57); and (4) a finding in Petitioner's favor would violate Patent Owner's constitutional right to due process (*id.* at 57–59). We address these arguments below.

Patent Owner's argument (4) regarding violation of its constitutional right to due process is based on denial of its opportunity to show that Petitioner's assertions as to its relationships with Licensees is inapposite. PO Resp. 59 (citing *Goldberg v. Kelly,* 397 U.S. 254, 269 (1970); *Greene v. McElroy*, 360 U.S. 474, 496 (1959); Paper 22, 5, 10). Since Patent Owner's Response, the Board has allowed and ordered additional discovery concerning privity for the reason discussed below.

On February 11, 2025, the Board entered Final Written Decisions in related proceedings. IPR2023-01242, Paper 84; IPR2023-01243, Paper 82; IPR2023-01244, Paper 83. On April 24, 2025, Patent Owner's Request for

---

that was accused of infringement in the [redacted] litigation. *See* Prelim. Resp. 15–16 (identifying the [redacted] litigation), 23 (declining to identify any product provided by Petitioner that was accused in the [redacted] litigation). During the trial phase of this proceeding, by contrast, Patent Owner expressly limited its privity assertions to Petitioner's alleged relationships with Intel and "both [redacted] and [redacted] two other time-barred parties," effectively waiving any argument that Petitioner is time barred based on a privity relationship with [redacted] Paper 68, 2 n.3. In view of that waiver, we do not address any alleged privity relationship with [redacted] Alternatively, because Patent Owner produced no evidence at any time during this proceeding sufficient to establish that Petitioner had an opportunity to control the [redacted] litigation or is acting as a proxy for [redacted] in this proceeding, we find that Petitioner was not in privity with [redacted] during the [redacted] litigation and no time bar arises on that basis under Section 315(b). *See id.*

Director Review of those decisions was granted, and the Final Written Decisions were vacated and remanded to the Board for further proceedings. IPR2023-01242, Paper 94; IPR2023-01243, Paper 91; IPR2023-01244, Paper 91 ("Director Review Order" or "Dir. Rev. Order").

The Director Review Order remands "to the Board with instructions to allow discovery, narrowly tailored to [a] privity issue" relating to an alleged relationship between Petitioner and a non-party, Intel. Dir. Rev. Order 3. In particular, the Director Review Order states that

> [t]he Board should then determine on the full record whether Petitioner has met its burden of demonstrating it is not time-barred under § 315(b); that is, whether Patent Owner has produced some evidence to support its argument that Intel should be named as a privy so as to have put the issue into dispute.

Id. (citing *Worlds Inc. v. Bungie, Inc.*, 903 F.3d 1237, 1242–44 (Fed. Cir. 2018)). As the same privity issue arises in the present proceeding, we follow the guidance of the Director Review Order here as well.

During the consolidated oral hearing on May 6, 2025, Patent Owner's counsel reiterated Patent Owner's position to not pursue additional discovery in this proceeding, notwithstanding the Director Review Order in the first wave cases. Tr. 69:10–20. Nonetheless, the Board *sua sponte* issued a Discovery Order (Paper 63, "Disc. Order"), "narrowly tailored," consistent with the Director Review Order, ordering Petitioner to provide the following discovery to Patent Owner:

> (a) . . . documents [including]:
>
> a. [s]ales agreements between Petitioner and Intel for the Intel Accused Products;[8] and
>
> b. [i]ndemnification agreements between Petitioner and Intel for the Intel Accused Products. *See* IPR2023-01242, [Paper 94,] 3.
>
> (b) Documents sufficient to show the asserted privity relationship between Petitioner and Intel, including any new declaration(s) that establish that 'no documents responsive to' Subsection (a) above 'exist', [] as well as any documents and new declaration(s) that establish (1) the time by which Petitioner became aware of the Intel litigation referenced in the [Director Review Order]; (2) whether Petitioner was the supplier of any product, or component of a product, accused of infringement in the Intel litigation; and (3) whether Petitioner was in a position to control, or actually controlled, Intel's defense of that litigation.

Disc. Order 6.

Following post-hearing briefing on the privity issue, the Board conducted a telephonic oral hearing on September 18, 2025. Ex. 1062 (Privity Tr.). Having considered the evidence of record, we determine that Petitioner is not in privity with Intel, and the Petition is not time-barred under 35 U.S.C. § 315(b).[9]

The briefs comingle analyses of the issues of real party in interest (RPI) and privity, and often use the terms interchangeably. *See, e.g.*, PO Privity Br. 2; PO Privity Reply 2. The two terms, however, describe distinct concepts with differing effects under the statute. *See, e.g.*, 35 U.S.C.

---

[8] The "products accused" consist of the "Intel Accused Products" identified on pages 4–8 of Exhibit 2048, namely, the Intel products accused of practicing the challenged claims in Patent Owner's prior litigation.

[9] We address [redacted] (and [redacted]) below in Section II.E.7.

§ 312(a)(2) (petition must identify all RPIs, but not privies). Prior to analyzing the parties' arguments, we summarize the concept of privity below.

A. *Statutory Bar as Nonparty Preclusion*

The one-year statutory bar of § 315(b) "helps to ensure that *inter partes* review provides a quick and cost effective alternative to litigation, and is not used as a tool for harassment or litigation gamesmanship." *Johnson Health Tech. Co. v. Icon Health & Fitness, Inc.*, Case IPR2014-01242, Paper 16 at 3 (PTAB Feb. 11, 2015) (citing H.R. REP. NO. 112-98 at 48, *as reprinted in* 2011 U.S.C.C.A.N. at 78). In this sense, § 315(b) is analogous to the common-law doctrines of claim preclusion and issue preclusion, which "preclude parties from contesting matters that they have had a full and fair opportunity to litigate," thereby "protect[ing] their adversaries from the expense and vexation attending multiple lawsuits, conserv[ing] judicial resources, and foster[ing] reliance on judicial action by minimizing the possibility of inconsistent decisions." *Montana v. United States*, 440 U.S. 147, 153–54 (1979). Our Practice Guide, therefore, looks to these doctrines of preclusion in interpreting the language of § 315(b). *See* Consolidated Trial Practice Guide ("Practice Guide" or "CTPG") at I.D.1.[10]

Like the common-law preclusion doctrines, the preclusive effect of § 315(b) also extends beyond those who were parties to the prior lawsuit. Because nonparty preclusion risks binding those who have not had a full and fair opportunity to litigate, the Supreme Court has cautioned that there is a general rule against nonparty preclusion, subject only to limited exceptions.

[10] Available at www.uspto.gov/patents/ptab/trial-practice-guide.

See Taylor v. Sturgell, 553 U.S. 880, 892–93 (2008). In *Taylor*, while noting that it was not a "definitive taxonomy" (*id.* at 893 n.6), the Court set forth a list of six "categories" under which nonparty preclusion may apply.[11]

> (1) "[A] person who *agrees to be bound* by the determination of issues in an action between others is bound in accordance with the terms of his agreement." *Id.* at 893.
>
> (2) "[N]onparty preclusion may be justified based on a variety of *pre-existing 'substantive legal relationships'* between the person to be bound and a party to the judgment," such as "preceding and succeeding owners of property, bailee and bailor, and assignee and assignor." *Id.* at 894.
>
> (3) "[I]n certain limited circumstances," such as class actions, "a nonparty may be bound by a judgment because she was '*adequately represented* by someone with the same interests who was a party to the suit.'" *Id.* The Court later elaborated that this exception applies only if there are "special procedures to protect the nonparties' interests, or an understanding by the concerned parties that the first suit was brought in a representative capacity." *Id.* at 900.
>
> (4) "[A] nonparty is bound by a judgment if she '*assumed control'* over the litigation," because that person "has had 'the opportunity to present proofs and argument' . . . even though he was not a formal party to the litigation." *Id.* at 895.
>
> (5) "[A] party bound by a judgment may not avoid its preclusive force by *relitigating through a proxy*," such as "when a nonparty later brings suit as an agent for a party who is bound by a judgment." *Id.*
>
> (6) "[A] *special statutory scheme*," such as bankruptcy or probate, "may 'expressly foreclose successive litigation by nonlitigants . . . if the scheme is otherwise consistent with due process.'"

Id.

---

[11] For clarity, we omit internal quotation marks and citations throughout the list of categories enumerated in *Taylor*, add emphasis on certain key phrases, and generally cleaned up the quotations.

Having listed these categories, the Court then held that a broader doctrine of nonparty preclusion, termed "virtual representation," was inconsistent with Federal common law, and risked violating due process. *Id.* at 898–900. Therefore, nonparty preclusion cannot be based on mere "identity of interests and some kind of relationship between parties and nonparties." *Id.* at 901.

B. *Caselaw on Privity*

"[T]he mere existence of some relationship between a petitioner and another entity is not sufficient" to place that petitioner in privity with that entity. *Google LLC v. DDC Technology*, *LLC*, IPR2023-00707, Paper 27 at 37 (PTAB Oct. 25, 2023). Instead, "that relationship must be related to [an earlier] lawsuit and be sufficiently close that it can be fairly said *the petitioner had a full and fair opportunity to litigate the validity of the patent in that lawsuit*." *Id.* (emphasis added). In other words, privity concerns "whether the petitioner and the prior litigant's relationship—as it relates to the [earlier] lawsuit—is sufficiently close that it can be fairly said that the petitioner had a full and fair opportunity to litigate the validity of the patent in that lawsuit," or "whether the petitioner is simply serving as a proxy to allow another party to litigate the patent validity question that the other party raised in an earlier filed litigation." *WesternGeco LLC v. ION Geophysical Corp.*, 889 F.3d 1308, 1319 (Fed. Cir. 2018).

Though expansive, the concept of privity has boundaries set by due process. As the Court held in *Taylor*, extending the preclusive concept of privity to those in "virtual representation," through identity of interest and a determination that the relationship of the parties is "'close enough' to bring the second litigant within the judgment," is impermissible. *See Taylor*,

553 U.S. at 898. Only if the nonparty can be said to have had a "full and fair opportunity to litigate" can that nonparty be precluded as a privy. *Id.* at 892–93; *see also Aspex Eyewear, Inc. v. Zenni Optical, Inc.*, 713 F.3d 1377, 1382 (Fed. Cir. 2013) ("A full and fair opportunity to litigate is the touchstone of any preclusion analysis.").

Courts examine different aspects of the parties' relationship, depending on the issue for which privity is being asserted. *See Int'l Nutrition Co. v. Horphag Research, Ltd.*, 220 F.3d 1325, 1329 (Fed. Cir. 2000) ("A variety of relationships between two parties can give rise to the conclusion that a nonparty to an action is 'in privity' with a party to the action"). For example, the parties' contractual relationship (privity of contract) regarding a product is relevant when determining whether an injunction against the sale of that product applies. *See In re Cyclobenzaprine Hydrochlorine Extended-Release Capsule Patent Litigation*, 504 F. App'x 900, 906 (Fed. Cir. 2013) (unpublished). In other situations—for example, in the case of a judgment with respect to a particular property interest—the relationship between the parties with respect to the transfer of the property may be the focus. *See Int'l Nutrition*, 220 F.3d at 1329. Therefore, the same two parties may be in privity for certain purposes, but not for others. *Id.*

In the context of § 315(b), the goal of the preclusion is to prevent successive challenges to a patent by those who previously have had the opportunity to make such challenges in prior litigation. As such, the focus of our privity inquiry is on the relationship between the parties *during the prior lawsuit*. In other words, we ask whether the instant petitioner and the prior litigant's relationship—as it relates to the lawsuit—is sufficiently close that it can be fairly said that the petitioner has had a full and fair opportunity to litigate the validity of the patent in the lawsuit.

In this sense, our privity inquiry will typically fall into *Taylor*'s fourth category of nonparty preclusion, which applies to situations in which the petitioner "has had the opportunity to present proofs and argument" such that it can be said to have "assumed control" over the action. *Taylor*, 553 U.S. at 895. Our Practice Guide reflects this, noting that control is a "common consideration" in the privity inquiry. CTPG at I.D.1.

Furthermore, we note that *actual* assumption of control of the lawsuit is not necessary for a finding of privity; the opportunity, or legal right, to assume control is sufficient. "Substantial control . . . connotes the availability of a significant degree of effective control in the prosecution or defense of the case—what one might term, in the vernacular, the power—whether exercised or not—to call the shots." *Gonzalez v. Banco Central Corp.*, 27 F.3d 751, 758 (1st Cir. 1994); *see Arris Group, Inc. v. C-Cation Techs., LLC*, Case IPR2014-00746, slip op. at 10 (PTAB Nov. 24, 2014) (Paper 22) (inquiring into whether party exercised, or could have exercised, control over District Court action); *see also* Practice Guide, 77 Fed. Reg. at 48,759 (quoting 18A Charles Alan Wright, Arthur R. Miller & Edward H. Cooper, Federal Practice & Procedure § 4451 (2d ed. 2011)) ("control generally means that 'it should be enough that the nonparty has the actual measure of control or *opportunity to control* that might reasonably be expected between two formal coparties'") (emphasis added).

Finally, privity is based on "flexible and equitable considerations," and, therefore, neither the Practice Guide nor our decisions set any bright-line test for when privity exists. CTPG at I.D.1. Nor should the preceding discussion be understood to mandate that all § 315(b) privity relationships must fall within the fourth "assumed control" category set forth in *Taylor*. Common to our cases, however, is a focus on the relationship between the

parties in the context of the prior lawsuit, and an inquiry as to whether the petitioner's relationship with the prior litigant was sufficiently close that it can be said that the petitioner had, or will have, a full and fair opportunity to litigate the validity of the patent in that prior action.

If we are satisfied that petitioner has "enjoyed its day in court" through its relationship with the litigant, it is fair to consider the parties to be privies. In *Taylor*, the Court held:

> [A] party bound by a judgment may not avoid its preclusive force by relitigating through a proxy. Preclusion is thus in order when a person who did not participate in a litigation later brings suit as the designated representative of a person who was a party to the prior adjudication . . . [I]t also seems clear that preclusion is appropriate when a nonparty later brings suit as an agent for a party who is bound by a judgment.

Taylor, 553 U.S. at 895.

C. *Petitioner's Arguments*

Petitioner contends that "Intel and onsemi are not in privity," and Patent Owner's "speculative and disproven arguments are not sufficient under *Worlds* or any other known jurisprudence to indicate that onsemi is time-barred." Pet. Privity Resp. 1, 11. According to Petitioner, "[t]he evidence is undisputed that 'onsemi does not currently and has never sold any of the Intel Accused Products' and 'onsemi does not currently and has never sold any component of the Intel Accused Products.'" *Id.* at 1 (footnote omitted) (citing Ex. 2914 ¶ 7). Petitioner contends that "discovery has confirmed that Intel ***never*** sought indemnity from onsemi for the Intel [l]itigation, which makes sense because no onsemi products were at issue in the case." *Id.* at 11 (internal citation omitted) (citing Ex. 2914 ¶¶ 7, 8), 6.

D. *Patent Owner's Arguments*

Patent Owner argues that it "has presented far more than 'some evidence' that time-barred parties, including Intel, should have been named as [an] RPI in the Petition." PO Privity Br. 2 (footnote omitted). Patent Owner also argues that it "maintains that Petitioner is in privity with . . . two other time-barred parties" and "that discovery should have been granted as to these parties for at least the reasons presented in PO's portion of the Joint Paper Concerning Additional Discovery." *Id.* at 2, n.3 (citing Paper 108,[12] 2–5).

Based on those allegations, Patent Owner takes issue with the Murphy Declaration as "merely repeat[ing] its previously-offered attorney argument without providing any additional detail, documentation, or substantiation to those arguments." PO Privity Br. 4; *see id.* at 5–6. Patent Owner contends that Mr. Murphy "did not contact anyone within the company or at Intel to discuss whether any Intel parts (accused or otherwise) included Petitioner's components." *Id.* at 6; *see id.* at 7–11.

Patent Owner contends, *instead*, that "[a]ll Mr. Murphy 'confirmed' was that Petitioner does not sell the Intel Accused Products (IAPs) *to* Intel, something that PO has never alleged." *Id.* at 6. Patent Owner takes the position that "Petitioner has not established whether or not it was the 'supplier of any . . . ***component*** of a product[] accused in the Intel litigation,' as required by the Board." *Id.* at 8 (citing Disc. Order 6). Patent Owner further contends that Petitioner's Declarant, Mr. Murphy, did not consult with the parties or people who would possess relevant information and that

[12] Patent Owner's citation to Paper 108 appears to refer to Paper 108 filed in IPR2023-001242. There is no paper 108 filed in this proceeding.

Petitioner failed to present any documentary evidence supporting Mr. Murphy's statements. *Id.* at 9–15.

E. *Analysis*

1. *Overview*

Our analysis below concerns whether Petitioner is in privity with Intel. *See* Dir. Rev. Order 3; Privity Tr. 14:7–15:2 (Petitioner's counsel asserting that privity, not RPI, is in dispute in the present proceeding). *Worlds* is a seminal case that addresses burdens on the parties when § 315 is at issue. In *Worlds*, the Court held that "an IPR petitioner's initial identification of the real parties in interest should be accepted unless and until disputed by a patent owner." *Worlds*, 903 F.3d 1242. The Court also "agree[d] that a patent owner must produce *some evidence* to support its argument that a particular third party should be named a real party in interest." *Id.* "[T]here can be no doubt that the IPR petitioner bears the ultimate burden of persuasion to show that its petitions are not time-barred under§ 315(b) based on a complaint served on an alleged real party in interest more than a year earlier." *Id.* Although *Worlds* addressed RPI, it more broadly discussed § 315 in general, which covers both RPI and privity.

In the present proceeding, Patent Owner did not produce "some evidence" tending to show that Petitioner is in privity with Intel and the burden never shifted to Petitioner. Even if we were to agree that Patent Owner did produce sufficient evidence to put the relationship between Petitioner and Intel into dispute, the evidence adduced during trial sufficiently supports Petitioner's position and, in particular, satisfies Petitioner's burden to show it is not time barred under § 315(b).

The evidence adduced during trial does not support a finding that the relationship between Petitioner and Intel is sufficiently close that both should be bound by the trial outcome and related estoppels, nor does it suggest, without more, that the parties were litigating either the district court action or the IPRs as proxies for the other. In a nutshell, the record is devoid of evidence tending to show that Petitioner controlled, or had an opportunity to control, the litigation. To the contrary, as explained below, the only record evidence on point supports Petitioner's position that it did not control, or have any opportunity to control, the litigation.

Petitioner contends that Patent Owner "does not (and cannot) dispute that onsemi was not aware of the Intel litigation until Friday, April 21, 2023, when Greenthread sued onsemi." Pet. Privity Resp. 1 (citing Ex. 2914 ¶¶ 9, 10). Petitioner further contends that "[b]ecause the Intel litigation was dismissed the very next Monday, April 24, 2023, as a matter of timing, it would have been impossible for onsemi to be involved in the Intel litigation, much less exercise any control over it." *Id.* Mr. Murphy credibly testifies that onsemi was not "in a position to control," nor did onsemi "actually control[ ] Intel's defense of the Intel [l]itigation." Ex. 2914 ¶¶ 9, 10.

In light of the assertions of lack of *actual* participation in and control of or opportunity to control the Intel litigation by Petitioner, and the lack of evidence as to whether Intel controlled or had an opportunity to control Petitioner's decisions in the Petitioner-initiated IPRs,[13] we next consider Petitioner and Intel's relationship, as it relates to the Intel litigation. We consider whether that relationship is sufficiently close such that the Intel

[13] Patent Owner does not argue that Intel is an RPI to the present proceeding and there is no evidence in the record to support this.

litigation would have given Petitioner a full and fair opportunity to litigate the validity of the challenged claims of the '195 patent or whether Petitioner "is simply serving as a proxy to allow" Intel "to litigate the patent validity question that" Intel "raised in an earlier-filed litigation." *See WesternGeco*, 889 F.3d at 1319, 1320 ("[T]he privity analysis is broader than simply inquiring whether PGS controlled or had an opportunity to control ION's decisions in the ION patent infringement litigation, or whether ION controlled or had an opportunity to control PGS's decisions in the PGS-initiated IPRs.").

In response to the Board's Discovery Order, Petitioner produced evidence, none of which supports Patent Owner's argument that Intel should be named as a privy so as to put the issue into dispute. *See* Dir. Rev. Order 3. It is worth emphasizing here that, contrary to Patent Owner's position,[14] the Director did not indicate that Patent Owner had met its burden of production under the *Worlds* decision. To the contrary, the Director remanded to the Board to allow discovery to determine, on the full record, "whether Patent Owner has produced some evidence to support its argument that Intel should be named as a privy *so as to have put the issue into dispute*." *Id.*

---

[14] Patent Owner stated that it would not seek post-hearing discovery on the same discovery issue that was the subject of the Director Review Decision in the first wave cases. *See, e.g.*, Tr. 69:10–20 ("JUDGE OBERMANN: Are you or are you not requesting additional discovery in this case? MR. WHITEHURST: I am not requesting additional discovery. I believe we have satisfied *Worlds*, are on the record that is before this Panel there is only one correct outcome, and that is to terminate the IPRs as time barred . . . . JUDGE OBERMANN: So you are absolutely stating that you would not request additional discovery in these cases? MR. WHITEHURST: We are not requesting additional discovery, Your Honor.")

Notwithstanding Patent Owner's arguments, addressed below, we find persuasive Petitioner's Declarant's testimony that

> [b]ecause onsemi has never sold any of the Intel Accused Products or any component of any of the Intel Accused Products to Intel *(or to anyone else)*, I can confirm that onsemi has never signed and does not possess any customer agreements, sales agreements, indemnification agreements, or any other documents concerning the sale of the Intel Accused Products.

Ex. 2914 ¶ 7 (emphasis added). Specifically, Mr. Murphy has been "the Vice President of Sales, Americas, at Semiconductor Components Industries, LLC ('onsemi')" for "approximately the last four years," and has "been employed by onsemi and its predecessor company in various positions for more than twenty-five years." *Id.* ¶ 3. Because of his "current role and . . . long history in sales-related roles at onsemi," Mr. Murphy testifies that he is "familiar with . . . whether any particular onsemi product has been sold to Intel Corporation ('Intel') in particular." *Id.* ¶ 4. We are persuaded that his experience supports that he had sufficient knowledge to make the attestation set forth above.

Mr. Murphy's deposition testimony also supports his Declaration testimony. Ex. 2915, 26:9–13 ("None of the parts we [(onsemi)] sell would be part of a[n] Intel CPU"), 33:20–34:8 ("Q. As you sit here today testifying under penalty of perjury, can you tell me definitively whether any of the products listed on Pages 4 through 8 of Exhibit 2048, include an onsemi part or product? A. I can confirm they do not."), 35:14–19 ("I can confirm that onsemi does not currently and has never sold any of the Intel accused products. And I can confirm that onsemi does not currently and has never sold any component of the Intel accused products."), 36:15–17 ("I do not sell any of these accused products or any component of those products to

Intel."), 83:6–12 ("Q. . . . Do you know whether the Intel Atom C2308 in fact included onsemi or Semiconductor Components Industries, LLC parts or elements? . . . [A.] I know that it does not include components of onsemi or Semiconductor Components Industries, LLC.").

In response to Patent Owner's allegation that "'Mr. Murphy clearly admitted that he does not know' whether the Intel Accused Products include an onsemi part," Petitioner clarified that "Mr. Murphy misunderstood one line of questions and answered in a way that suggested he did not know whether the Intel Accused Products included onsemi components." Pet. Privity Resp. 12 (citing PO Privity Br. 8; Ex. 2915, 62:3–17). Petitioner persuasively argues that "Mr. Murphy corrected this misunderstanding both on redirect and in the errata to his deposition." *Id.* (citing Ex. 2915, 62:3–17, 83:6–84:11, 104:1–22). Petitioner contends, and we agree, that "[t]he full record thus shows that Mr. Murphy knows that the Intel Accused Products ***do not*** include onsemi components." *Id.* (citing Ex. 2915, 33:20–34:8). We are neither apprised of nor can discern evidence of inaccuracies, inconsistencies, or any other impropriety, particularly as Mr. Murphy testified under penalty of perjury.

We agree with Petitioner that "the best source of proof for this *negative* point—*i.e.*, that onsemi *does not supply* the Intel Accused Products or components thereof—is testimony from a person knowledgeable about onsemi's business" and agree that "Mr. Murphy's declaration and deposition testimony resolves this question." Pet. Privity Resp. 13; *but see* PO Privity Reply 14–15.

The Board did not order a particular style or depth of investigation (*see* Disc. Order 6), nor do we think that Petitioner's investigations were in any way insufficient. In particular, we disagree with Patent Owner's position

that compliance with our Discovery Order required Petitioner's Declarant to contact Intel to determine whether IAPs include components sold or manufactured by Petitioner or contact affiliates, resellers, or distributors as part of their investigation. *See, e.g.*, PO Privity Br. 9 ("Petitioner . . . never asked Intel."), 13 ("Mr. Murphy never investigated any of Petitioner's affiliates, resellers, or distributors."); PO Privity Reply 10 ("PO has already explained . . . that ***Intel itself*** is the best source of proof on this issue."). The Declaration produced by Petitioner is sufficient to comply with our Discovery Order.

We further agree with Petitioner's contention that Patent Owner's teardown analyses of the IAPs do not tend to show that the IAPs contain any components that are supplied by any third party, including Petitioner, otherwise, Patent Owner's "teardown analysis and robust party discovery in the Intel litigation would have revealed it." Pet. Privity Resp. 7–8 (citing Ex. 2048, 52–56). Thus, the teardown analysis supports Petitioner's view that the accused products in the Intel litigation are limited to the enumerated Intel products listed on pages 4–8 of Exhibit 2048. Our analysis, in that regard, satisfies the Director's mandate that we resolve, on the full record, whether "Petitioner was a supplier of" products that were "accused of practicing the challenged claims" in the Intel litigation. Dir. Rev. Order 3. The resounding answer is no.

2. *Indirect Sales and Third-Party Resellers*

Patent Owner alleges that "any investigation into Petitioner's supplier relationship with Intel was cabined solely to whether or not there are direct sales or indemnity agreements for the complete IAPs themselves." PO Privity Reply 6 (citing Ex. 2915, 25:12–51). Patent Owner contends that

"Petitioner undertook no efforts to learn whether any of its parts are incorporated into Intel processors" and "never investigated whether any of Petitioner's affiliates, subsidiaries, or third-party resellers provide parts that Intel then incorporates into its products." PO Privity Br. 9, 12. The Discovery Order did not specifically require Petitioner to produce evidence beyond agreements between Petitioner and Intel related to products accused of practicing the challenged claims. Disc. Order 6. Here again, we observe, the Discovery Order comports with the Director's mandate for us to investigate and resolve whether "Petitioner was a supplier of" products that were "accused of practicing the challenged claims" in the Intel litigation. Dir. Rev. Order 3.

Nevertheless, Mr. Murphy repeatedly testified that "onsemi does not in fact sell to Intel *(or any other party)* any components of the Intel Accused Products." Pet. Privity Resp. 7 (emphasis added) (citing Ex. 2914 ¶ 7; Ex. 2915, 26:9–13 ("None of the parts we [(onsemi)] sell would be part of a[n] Intel CPU."), 33:20–34:8, 35:14–19, 36:15–17, 83:6–12).

3. *Incorporation of Petitioner's Products into Non-Accused Intel Products*

To the extent Patent Owner argues that Petitioner's investigation is lacking for failure to determine any potential use of Petitioner's products in *non-accused*, Intel products, even assuming, *arguendo*, that Patent Owner is correct that "[i]t is undisputed that Intel is one of Petitioner's customers" and "Intel confirms that Petitioner is one of its suppliers," this argument is unavailing. A "manufacturer-customer relationship alone does not establish privity" at least because any such relationship does not concern supplying *IAPs or components thereof*. PO Privity Br. 2–3 (citing Ex. 2009, 2 (listing Intel as a "[t]op OEM customer"); Ex. 2104, 63:15–17, 38:1–3; Ex. 2004,

10–13); Pet. Privity Resp. 5 (quoting *Samsung Electronics Co. Ltd. v. Netlist Inc.*, IPR2022-00615, Paper 64 at 23 (PTAB, June 30, 2023), 10); *see WesternGeco*, 889 F.3d at 1321 ("Regarding the pre-suit business alliance, the Board found that ION and PGS had a contractual and fairly standard customer-manufacturer relationship regarding the accused product. This finding does not necessarily suggest that the relationship is sufficiently close.").

According to Patent Owner, "[p]er its 'Standard Terms and Conditions of Sale' (T&Cs), Petitioner indemnifies its customers." PO Privity Br. 3 (citing Ex. 2010). Patent Owner asserts that "[t]hese T&Cs apply to all onsemi sales and every customer, including Intel." *Id.* (citing Ex. 2915,[15] 43:19–44:6, 45:14–46:5 ("Q. Are you aware as to whether or not there is a different agreement in place for sales made by onsemi to Intel? A. No.")). Patent Owner further contends that "Mr. Murphy confirmed that the indemnity provisions of Petitioner's Standard T&Cs require Petitioner to 'indemnify a buyer based upon a claim of patent infringement of a product purchased from onsemi.'" *Id.* (citing Ex. 2915, 74:15–22). Those arguments are mooted by Mr. Murphy's unequivocal testimony on point. We agree with Petitioner that the evidence supports a finding that "discovery has confirmed that Intel ***never*** sought indemnity from onsemi for the Intel [l]itigation, which makes sense because no onsemi products were at issue in the" Intel litigation. Pet. Privity Resp. 11 (internal citation omitted) (citing Ex. 2914 ¶¶ 7, 8).

[15] The record does not include an Exhibit 2104. Patent Owner's citations to Exhibit 2104 are understood to refer to Exhibit 2915 instead.

4. *Adjacency to IAPs*

To the extent that Patent Owner argues that Petitioner's product was accused because it is capable of being in the same system as an IAP (*see* Ex. 2006, Fig. 2; Tr. 22:1–27:22), we find these arguments unavailing. That is not what Patent Owner specifically identified in its infringement contentions as practicing the challenged claims. The system(s) identified by Patent Owner are accused solely on the basis that the infringement derives from the IAPs specifically identified in the list of infringement contentions. *See* Ex. 2048, 4–8.

5. *Providing Custom Products to Customers*

To the extent that Patent Owner suggests that, because "Petitioner . . . makes custom products for its OEM customers," such collaboration implies privity, presumably with Intel, we disagree. PO Privity Br. 3. Instead, we agree with Petitioner that "generally collaborating and making custom products" is not dispositive and, instead, "[w]hat matters for privity is that onsemi did ***not*** make the Intel Accused Products or components thereof." Pet. Privity Resp. 11 (citing Ex. 2914 ¶ 7). *See, e.g.*, *WesternGeco*, 889 F.3d at 1319–22 (the parties "had a contractual and fairly standard customer-manufacturer relationship regarding the accused product," which "does not necessarily suggest that the relationship is sufficiently close that both" parties should be considered to be in privity); *Wi-Fi One, LLC v. Broadcom Corp.*, 887 F.3d 1329, 1340–41 (Fed. Cir. 2018) (same); *Samsung*, IPR2022-00615, Paper 64 at 22–26 (same).

6. *Alleged Sub-license from RPX Corporation ("RPX")*

Patent Owner asserts that it granted Intel a release for past infringement and license to its patents "by way of sublicense through RPX."

PO Resp. 41 (citing Ex. 2022, 2). Patent Owner contends that "Intel confirms that Petitioner is one of its suppliers" and "[a]s a result, Petitioner received a sublicense as a 'have made vendor' to make and sell products to Intel under Intel's license with PO." PO Privity Br. 2–3 (citing Ex. 2004, 10–13; Ex. 2022, 3). Petitioner correctly points out that Patent Owner's argument is unavailing because Patent Owner "has not produced the actual sublicense from RPX to Intel; an agreement between RPX and Greenthread cannot create privity between onsemi and Intel; and this RPX agreement does nothing to show a connection between onsemi and the Intel litigation." Pet. Privity Resp. 10–11.

7. *Summary*

Based on the complete record before us, including the evidence adduced during trial and post-hearing discovery, briefing, and hearing, we determine Patent Owner did not produce at least "some evidence" to support its argument that Intel should be named as a privy so as to have put the issue into dispute. *See* Dir. Rev. Order 3 (making plain that the question on remand is whether Patent Owner has met that burden of production). Even if we were to agree that Patent Owner met its burden of production, we determine that the totality of evidence adduced during trial and post-hearing discovery, briefing, and telephonic hearing sufficiently supports Petitioner's contention and, in particular, satisfies Petitioner's burden to show it is not time barred under § 315(b).

As for Patent Owner's argument that it "maintains that Petitioner is in privity with both [redacted] and [redacted] two other time-barred parties," and "that discovery should have been granted as to these parties for at least the reasons presented in PO's portion of the Joint Paper Concerning Additional

Discovery" in IPR2023-01242, we decline to address this argument. PO Privity Br. 2–3 n.3 (citing IPR2023-01242, Paper 108 at 2–5). The Director Review Order made clear that the earlier Final Written Decisions in related proceedings (i.e., IPR2023-01242, IPR2023-01243, IPR2023-01244) were remanded to consider issues of privity with respect to only Intel and we decline to enlarge the scope of the "narrowly tailored" discovery set forth in the Director Review Order. *See* Dir. Rev. Order 3.

Regardless, [redacted] was served with an infringement complaint on January 23, 2023 (*see* Ex. 2019), and the Petition in the present proceeding was filed in December of 2023—[redacted] could not reasonably be, based on the evidence before us, considered a party giving rise to a time bar under § 315(b). [redacted] is not alleged to be an RPI or privy of Petitioner. *See* PO Resp. 42 (identifying Licensees as [redacted] Intel, and [redacted]). Rather, [redacted] is alleged to be an RPI of an alleged RPI—[redacted] (*see* PO Resp. 41–42)—a degree of separation that is not contemplated by the clear language of the statute.

We turn next to Petitioner's challenges to the patentability of the challenged claims. In doing so, we note that the Supreme Court in *Thryv* emphasized that "Congress prioritized *patentability* over § 315(b)'s timeliness requirement," and by providing for *inter partes* review, "sought to weed out bad patent claims efficiently." *Thryv*, 590 U.S. at 55 (emphasis added). The Court also emphasized that the statutory scheme of *inter partes* review "consistently elevat[es] resolution of patentability above a petitioner's compliance with § 315(b) . . . , thereby preserving the Board's adjudication of the merits." *Id.*; *see id.* ("[B]ecause a patent owner would need to appeal on § 315(b) untimeliness grounds only if she could not

prevail on patentability, § 315(b) appeals would operate to save bad patent claims.”).

III. PATENTABILITY ANALYSIS

A. *Legal Standard*

“In an [*inter partes* review], the petitioner has the burden from the onset to show with particularity why the patent it challenges is unpatentable.” *Harmonic Inc. v. Avid Tech., Inc.*, 815 F.3d 1356, 1363 (Fed. Cir. 2016). The burden of persuasion never shifts to Patent Owner. *Dynamic Drinkware, LLC v. Nat’l Graphics, Inc.*, 800 F.3d 1375, 1378 (Fed. Cir. 2015).

A patent claim is unpatentable under 35 U.S.C. § 103(a) if the differences between the claimed subject matter and “the prior art are such that the subject matter, as a whole, would have been obvious at the time the invention was made to a person having ordinary skill in the art to which said subject matter pertains.” *KSR Int’l Co. v. Teleflex Inc.*, 550 U.S. 398, 406 (2007). The question of obviousness is resolved on the basis of underlying factual determinations including: (1) the scope and content of the prior art; (2) any differences between the claimed subject matter and the prior art; (3) the level of ordinary skill in the art; and (4) when in evidence, objective evidence of nonobviousness. *Graham v. John Deere Co.*, 383 U.S. 1, 17–18 (1966).

B. *Level of Ordinary Skill in the Art*

In order to determine whether an invention would have been obvious at the time the application was filed, we consider the level of ordinary skill in the pertinent art. *Graham*, 383 U.S. at 17. In assessing the level of ordinary skill in the art, various factors may be considered, including the

"type of problems encountered in the art; prior art solutions to those problems; rapidity with which innovations are made; sophistication of the technology; and educational level of active workers in the field." *In re GPAC, Inc.*, 57 F.3d 1573, 1579 (Fed. Cir. 1995).

The parties agree that one of ordinary skill in the art would have had a Bachelor's degree in electrical engineering, material science, applied physics, or a related field, and four years of experience in semiconductor design and manufacturing or equivalent work experience and that additional education in a relevant field and industry experience may compensate for a deficiency in some other aspect of these requirements. Pet. 8 (citing Ex. 1003 ¶¶ 55–58); PO Resp. 9 (citing Ex. 2064 ¶¶ 17–18). Patent Owner further includes chemical engineering and an emphasis on semiconductor manufacturing as relevant education in which a person having ordinary skill in the art would have had a Bachelor's degree. PO Resp. 9.

On this record, we adopt Petitioner's description of a person having ordinary skill in the art as modified by Patent Owner.

C. *Claim Construction*

In an *inter partes* review proceeding, a patent claim is construed using the same claim construction standard that would be used to construe the claim in a civil action under 35 U.S.C. § 282(b). 37 C.F.R. § 42.100(b) (as amended Oct. 11, 2018). This rule adopts the same claim construction standard used by Article III federal courts, which follow *Phillips v. AWH Corp.*, 415 F.3d 1303 (Fed. Cir. 2005) (en banc), and its progeny. Under this standard, the words of a claim are generally given their "ordinary and customary meaning," which is the meaning the term would have to a person

of ordinary skill at the time of the invention, in the context of the entire patent including the specification. *See Phillips*, 415 F.3d at 1312–13.

1. *The Parties' Positions*

Petitioner contends that no claim terms require express construction to resolve the issues presented in the Petition. Pet. 8. Regarding the term "aid the movement of minority carriers," Petitioner's position is that nothing in the challenged apparatus claims requires the graded dopant concentration to create movement where none exists. Pet. Reply. 3. Petitioner contends that, because the challenged claims are directed to an apparatus, the relevant inquiry is whether the graded dopant concentration is capable of performing the claimed limitation. *Id.* at 1 (citing *ParkerVision, Inc. v. Qualcomm Inc.*, 903 F.3d 1354, 1361 (Fed. Cir. 2018)). According to Petitioner, Patent Owner's statements in the prosecution history demonstrate that no actual movement is needed and that "a downward-sloping graded dopant concentration was known to create an 'inherent "built-in" unidirectional electric field' that sweeps carriers down into the substrate." *Id.* at 4 (quoting Ex. 1002, 289–90).

Patent Owner asserts that the plain and ordinary meaning of "aid the movement of carriers" requires that a carrier move in the specified direction. PO Resp. 10. According to Patent Owner, district court claim construction orders in the same patent family support this interpretation. *Id.* at 10 (citing Ex. 2080 ("WDTX Markman Order"), 39–40; Ex. 2082 ("EDTX Markman Order"), 15).

In its Sur-Reply, Patent Owner contends that "[t]he claims do not require a GDC [graded dopant concentration] "that is merely 'capable' of moving carriers from the 'active region.' Instead, they require a GDC that

actually moves carriers from the 'active region.'" PO Sur-Reply 4. Patent Owner further contends "the minority carriers must not only *move*, they must *move in the correct direction*, ***from*** the 'active region' to deeper in the substrate" in order to "improve performance of the claimed transistor." *Id.* at 5–6 (citing *Sequoia Tech., LLC v. Dell, Inc.*, 66 F.4th 1317, 1326 (Fed. Cir. 2023); *KEYnetik, Inc. v. Samsung Elecs. Co., Ltd.*, 837 Fed. App'x 786, 792 (Fed. Cir. 2020)).

2. *The District Court Orders*

With regard to the Western District of Texas Markman Order, Patent Owner contends that the Court "unequivocally stated, 'a graded concentration . . . that is [not "sufficiently graded"] will not aid in the movement of minority carriers[.]'" PO Resp. 10 (alterations in original) (quoting Ex. 2080, 39–40 ("WDTX Markman Order")). The Defendant in that case, Cirrus Logic, asserted that the term "graded dopant concentration" was indefinite, as the boundary between "graded" and "uniform" doping concentrations is unclear. Ex. 2080, 32 (citing Ex. 2062 ("the '195 patent"), 3:45–49; *Berkheimer v. HP*, *Inc.*, 881 F.3d 1360, 1364 (Fed. Circ. 2018)).

Patent Owner argued in response that the patent provides sufficient guidance as to the meaning of the claim term, with "graded" meaning varying or not "uniform." Ex. 2080, 38 ("Greenthread contends that Figure 1 in the '195 Patent depicts the difference between uniform and graded concentration, namely, that the concentration in the former is the same across a region while in the latter, the concentration has a slope."). According to Patent Owner now, the District Court understood the claims

mean that "not all doping gradients aid carrier movement." PO Resp. 18 (citing Ex. 2080, 39–40).

With regard to the EDTX Markman Order, Patent Owner contends that the Court "explained that 'the slope [of the gradient] has both a direction and a magnitude and [d]efendant [incorrectly] suggests that the direction of the drift electric field depends solely on ***the direction*** of the slope of the graded concentration.'" PO Resp. 10–11 (alterations in original) (quoting Ex. 2082, 15 ("EDTX Markman Order")). The parties disputed the proper construction of the term "single drift layer . . . having a graded concentration of dopants . . . said drift layer further having a first static unidirectional electric drift field." Ex. 2082, 10. Patent Owner asserted that no construction was necessary, whereas Defendant Samsung argued that the term should be construed as a "single layer whose concentration of dopants either increases across the layer or decreases across the layer." *Id.* According to Patent Owner now, the EDTX Court understood that direction alone does not determine whether a gradient aids carrier movement, as the magnitude of the gradient must also be considered. PO Resp. 10 (citing Ex. 2082, 15).

The EDTX Court explained that the dispute distilled into two issues: (1) "whether 'graded concentration of dopants' necessarily means the concentration only decreases or only increases across the layer"; and (2) "whether the 'single drift layer' is necessarily a single layer." Ex. 2082, 13–14.

In addressing the first issue, namely, whether the graded concentration of dopants could both increase and decrease in the drift layer, the EDTX Court rejected the suggestion that the prosecution statement concerning the direction of the electrical field and that carrier movement "depends solely on the slope of the graded concentration of dopant" demonstrates that "the slope

must be only increasing or only decreasing to maintain a unidirectional drift field." *Id.* at 15. In rejecting this argument, the EDTX Court found that the patentee affirmatively argued during prosecution "that a graded dopant concentration will provide a unidirectional electric drift field to move the minority carriers in a single direction," and that "[t]his does not clearly foreclose a situation in which the slope of the concentration may be both increasing and decreasing in the drift layer." *Id.* at 15–17. Contrary to Patent Owner's arguments, therefore, the EDTX Court's conclusion regarding the scope of the claims appears consistent with both the Applicant's assertion during prosecution and Petitioner's arguments in this proceeding, i.e., that "a graded dopant concentration will provide a unidirectional electric drift field to move the minority carriers in a single direction." *Id.* at 16.

The WDTX Court determined that the term was not indefinite for multiple reasons and that "graded" "describes a sloped doping concentration." Ex. 2080, 39–41. According to the WDTX Court, a graded dopant concentration must be sufficiently graded to result in a "static unidirectional electric drift field to aid the movement of minority carriers," as recited in claim 1 of U.S. Patent No. 8,421,195. *Id.* at 39–40.

We discern no finding in the WDTX Court's Order that one must quantify the magnitude of the field in order to know if the electric field will "aid the movement of minority carriers." First, the WDTX Court was not addressing the same argument raised by Patent Owner in this proceeding. Rather, it was addressing whether the term "graded dopant concentration" is indefinite.

Second, the WDTX Court's Order can reasonably be interpreted to require only that the graded dopant concentration be sufficiently graded to create a "static unidirectional electric drift field," as recited in the claims,

which, as the Applicant argued during prosecution and in its claim construction brief before the WDTX, would "aid in the movement of minority carriers." Ex. 2080, 39–40; Ex. 1030[16], 26 ("[A] [person of ordinary skill in the art] would have readily recognized that when a 'static unidirectional electric drift field' is present that it aids the movement of minority carriers. If it isn't present, then it doesn't."), 28 ("The intrinsic record consistently confirms that the electric fields aid the movement of the carriers."). Against that backdrop, we find unpersuasive Patent Owner's inconsistent contention here that "'a graded concentration . . . that is [not "sufficiently graded"] will not aid in the movement of minority carriers[.]'" PO Resp. 10 (alterations in original) (quoting Ex. 2080, 39–40 ("WDTX Markman Order")).

3. *The Prosecution History*

During prosecution of the '195 patent, the Examiner rejected claims under the pre-AIA version of 35 U.S.C. § 112, first paragraph, arguing that "movement of minority carriers is affected by multiple forces and fields" and that "it does not appear that simply the presence of 'a unidirectional drift field' in itself can achieve 'drawing *all* minority carriers from said surface layer to said substrate.'" Ex. 1002, 270 (emphasis added). Patent Owner responded with the following argument:

> [A] unidirectional drift (electric) field <u>necessarily</u> affects all the present minority carriers in the same way - moving all minority carriers in the same direction because of the unidirectional drift due to the existence of the electric field. *See* "Physics and Technology of Semiconductor Devices," A.S. Grove, pp. 224–225, John Wiley and Sons, Inc., New York, 1st Edition 1967 ("This same electric field will then be of such direction as to aid

[16] We refer to the native numbering in Exhibit 1030.

> the motion of injected holes. Thus the injected minority carriers will now move not only by diffusion but also by drift due to the existence of this electric field."). Depending on the particular slope of the graded concentration of dopant, all minority carriers are either swept "down" (from the surface layer to the substrate) or "up" (from the substrate to the surface layer). *See* Applicant's Figs. 5(b) and 5(c).

Id. at 289.

Patent Owner further argued that the Examiner's finding

> appears to not consider that the graded dopant concentration <u>itself</u> creates a "built-in" electrical field that forces the movement of carriers into a particular direction, whereby the "direction" of the electrical field and the resulting direction of the carrier movement depends *solely* on the slope of the graded concentration of dopant. With regard to the existence of a "built-in" electric field created by a graded dopant density, . . . *this inherent "built-in" unidirectional electric field is the additional parameter for ensuring that all minority carriers are being moved in one direction* and which parameter the Office Action deemed to be missing from the disclosure.

Id. at 289–90 (emphases added). Also, "without conceding [its] position on this issue," Patent Owner amended the claims to no longer require "drawing all minority carriers," and, instead, require the claimed "unidirectional drift field," created by the "graded concentration of dopants," "to aid the movement of minority carriers." [17] *Id.* at 290.

Here, Patent Owner contends its statement was in response to an Office Action on a claim that required a "single static unidirectional electric

---

[17] The examined claims of the '195 patent application generally recited "a unidirectional drift field drawing all minority carriers from said surface layer to said substrate." Ex. 1002, 286. Patent Owner amended the claims of the '195 patent application to recite "maintain[ing] a single static unidirectional electric drift field to aid the movement of minority carriers from said surface layer to said substrate." *Id.*

drift field to aid the movement of carriers" (PO Resp. 21 (citing Ex. 1002,[18] 286)), and those additional limitations were an additional parameter besides the graded dopants to "ensur[e] that all minority carriers are moved." *Id.* (citing Ex. 1002, 290). Patent Owner also points to the Examiner's statement during prosecution that in "a complex electronic device, movement of minority carriers is affected by multiple forces and fields" but "without knowing other parameters of the device" one cannot say whether a drift field would aid carrier movement. *Id.* at 16 (quoting Ex. 1002, 270). Thus, Patent Owner argues a mere downward sloping gradient, without additional calculation of slope, does not satisfy the claim limitation's purported requirement to "aid the movement of minority carriers."

4. *Conclusion*

Having considered the parties' arguments and evidence from the prosecution history together with the district court claim construction orders, we determine that Patent Owner's statements during prosecution of the '195 patent were clear, unambiguous, and indicate that one of ordinary skill in the art need not know whether there are other "forces and fields" in an electronic device, as the mere presence of a graded dopant concentration creating "a unidirectional drift field," facing in the appropriate direction, will "aid the movement of minority carriers." Ex. 1002, 270, 289–290. The public was entitled to rely on these clear and unambiguous statements when considering the scope of the challenged claims. *Hockerson-Halberstadt v. Avia Group Int'l*, 222 F.3d 951, 957 (Fed. Cir. 2000) ("The prosecution history constitutes a public record of the patentee's representation

[18] Patent Owner cites to Exhibit 1016 in its brief, however, Exhibit 1002 is the prosecution history of the '195 patent.

concerning the scope and meaning of the claims, and competitors are entitled to rely on those representation when ascertaining the degree of lawful conduct, such as designing around the claim invention."). Patent Owner's statements during prosecution contradict its arguments in the present proceeding. The conclusions of the district court claim construction orders are consistent with Patent Owner's statements during prosecution.

We agree with Petitioner that in view of the prosecution history, the claim recitation "a graded concentration of dopants generation a . . . static unidirectional electric drift field to aid the movement of minority carriers from said surface layer to said substrate" requires only a relative slope determination, and a graded dopant concentration is enough to teach aiding carrier movement in a particular direction. Patent Owner's statements during prosecution of the '195 patent, along with the specification of the '195 patent, support a determination that a graded dopant concentration is enough to teach aiding carrier movement in a particular direction. Our analysis is not altered after giving appropriate weight to the district court claim construction analyses in Exhibits 2080 and 2082.

The language of the claim itself also supports our determination that a graded dopant concentration is sufficient to meet the limitation "a graded concentration of dopants generating a . . . static unidirectional electric drift field to aid the movement of minority carriers from said surface layer to said substrate." In *ParkerVision,* 903 F.3d at 1361, the Federal Circuit held that claims directed to devices "cover what a device *is*, not what a device does" (quoting *Hewlett-Packard Co. v. Bausch & Lomb Inc.*, 909 F.2d 1464, 1468 (Fed. Cir. 1990). In other words, a claim limitation directed to a device having a recited function requires "an apparatus that is 'reasonably capable' of performing the claimed function[]." *Id.* at 1361–62 (a device may be

"reasonably capable of operating so as to meet the claim limitations, even if it does not meet the claim limitations in all modes of operation"). Challenged claim 1 is not a method claim, and recites structure for a semiconductor device, i.e. "a graded concentration of dopants." Therefore, to effectively challenge the limitation "a graded concentration of dopants generating a . . . static unidirectional electric drift field to aid the movement of minority carriers from said surface layer to said substrate," Petitioner need only show "a graded concentration of dopants" that is *capable* of "aid[ing] the movement of minority carriers from said surface layer to said substrate."

D. *Objective Indicia of Nonobviousness*

Patent Owner alleges that a license agreement with RPX ("the RPX license") that covers the patent family including the '195 patent is evidence supporting the objective indicia of nonobviousness. PO Resp. 37–39. Patent Owner further argues that because the licensees, [redacted] and [redacted] approached Patent Owner through RPX without threat of litigation against them, the RPX license agreement is especially probative of non-obviousness. *Id.* at 37–38 (citing Ex. 2078). Patent Owner further argues that its invention is "part and parcel" of the RPX license because all of the claims of the licensed patents relate to using graded dopants to move carriers from active circuitry at the surface further down into the device. *Id.* at 38.

Patent Owner bears the burden of establishing that a nexus exists between the objective evidence and the claimed invention. *Fox Factory, Inc. v. SRAM, LLC*, 944 F.3d 1366, 1373 (Fed. Cir. 2019). Nexus is a legally and factually sufficient connection between the objective evidence and the

claimed invention, such that the objective evidence should be considered in determining non-obviousness. *Demaco Corp. v. F. Von Langsdorff Licensing Ltd.*, 851 F.2d 1387, 1392 (Fed. Cir. 1988). "A nexus may not exist where, for example, the merits of the claimed invention were 'readily available in the prior art.'" *ClassCo, Inc. v. Apple, Inc.*, 838 F.3d 1214, 1220 (Fed. Cir. 2016) (quoting *Richdel, Inc. v. Sunspool Corp.*, 714 F.2d 1573, 1580 (Fed. Cir. 1983)). "Unlike products, which may incorporate numerous features beyond those claimed or described in a patent and therefore may require careful parsing to establish a nexus, actual licenses to the subject patent do not demand the same, as they are, by their nature, directly tied to the patented technology." *Ancora Techs. Inc. v. Roku Inc.*, 140 F.4th 1351, 1362 (Fed. Cir. June 16, 2025) (citing *LaserDynamics, Inc. v. Quanta Computer, Inc.,* 694 F.3d 51, 79 (Fed. Cir. 2012)).

We find that there is nexus between the objective indicia and the challenged claims based on the RPX license that includes the '195 patent in the listing of the patent family covered by the license. *See* Ex. 2078, 19 (Appendix A, Exhibit B); *Ancora*, 140 F.4th at 1362.

Here, Patent Owner relies on the RPX license and asserts that its technique of "creating 'a drift field to sweep these unwanted minority carriers from the active circuitry at the surface into the substrate'" (PO Resp. 38 (quoting Ex. 1001, 3:30–32)) is "part and parcel" with the RPX license. *Id.* at 38. We have considered the RPX license and Patent Owner's argument.

Even if the RPX license conveys a right to all the challenged claims sufficient to support a nexus, we decline to give significant weight to the RPX license. We do not agree with Patent Owner that the RPX license is "especially probative" because [redacted] and [redacted] were under no

apparent threat of litigation. *See* PO Resp. 37–38. Although Patent Owner argues that the RPX license was not motivated by a threat of litigation, and that the expense for [redacted] and [redacted] to litigate the challenged patents "would have been trivial" (*see id.*), the weight of evidence does not support those arguments. RPX markets itself as a cost-saving service that spreads litigation cost across a large network of companies and "remove[s] patents from circulation before they become costly issues." Ex. 1055, 1. RPX further markets itself as working on behalf of its clients to prevent potential litigation and associated legal defense costs and settlements. *Id.* at 3.

In view of this evidence, Patent Owner's argument that [redacted] and [redacted] entered a license under no apparent threat of litigation is not persuasive because it may reflect the value of RPX as a risk mitigation service and, therefore, on this record, does not reflect the value of the challenged patent specifically. *Cf. Transocean Offshore Deepwater Drilling, Inc. v. Maersk Drilling USA, Inc.*, 699 F.3d 1340, 1353 (Fed. Cir. 2012) (License found to be due to the merits of the claimed invention to support nonobviousness where royalties exceeding the cost of litigation reflected the value of the licensed technology); *Samsung Elec. Co. Ltd. v. Neonode Smartphone LLC*, IPR2021-00144, Paper 59 at 51 (PTAB Dec. 15, 2022) (License found to be due to an interest in "[the patent owner's] technology exclusively" and not some "other economic reason that might discount . . . interest in exclusively licensing the technology.").

Unlike in the *Samsung v. Neonode* case, the record here does not provide sufficient evidence that the amount paid for the RPX license is due exclusively to the licensed technology rather than some other economic reason. In addition, unlike in the *Transocean* case, the record here includes no evidence of the contribution that [redacted] and [redacted] made towards the

lumpsum licensing fee, relative to the contribution of [redacted] and/or any other RPX member. The record is not sufficiently developed to determine whether the contribution amounts of [redacted] and [redacted] are significant compared to the potential cost of litigation. Ex. 2078 ¶ 6.

As to Patent Owner's argument that the license evidences non-obviousness because "moving carriers 'from the active circuitry at the surface' is missing from the prior art" (PO Resp. 38), we disagree that claim limitation is missing from the prior art for the reasons discussed below in Sections III.E.2 and III.H.3. *See Tokai Corp. v. Easton Enters., Inc*., 632 F.3d 1358, 1369 (Fed. Cir. 2011) ("If commercial success is due to an element in the prior art, no nexus exists."); *Ormco Corp. v. Align Technology, Inc*., 463 F.3d 1299, 1312 (Fed. Cir. 2006) ("[I]f the feature that creates the commercial success was known in the prior art, the success is not pertinent."). Accordingly, we find the RPX licenses are not entitled to significant weight.

Having determined the weight to be given to Patent Owner's licenses, we turn to the evidence and argument regarding the remaining *Graham* factors in evaluating Petitioner's obviousness contentions as to each of the challenged claims. Even if we were to give the RPX license significant weight, we determine that Petitioner's showings of *prima facie* obviousness, particularly in view of the strength of the grounds based on Payne (a single reference obviousness ground) and Sakai and Kawagoe discussed below outweigh Patent Owner's objective evidence of nonobviousness. *See Tokai Corp.*, 632 F.3d at 1371 ("A strong case of prima facie obviousness . . . cannot be overcome by a far weaker showing of objective indicia of nonobviousness.").

E. *Claims 1, 2, and 4–6: Obviousness in view of Payne*

Petitioner contends claims 1, 2, and 4–6 would have been obvious in view of Payne. Pet. 13–43. Patent Owner contends that Petitioner fails to demonstrate that Payne discloses all of the limitations in claims 1, 2, and 4–6. PO Resp. 33–37.

1. *Payne (Ex. 1005)*

Payne "relates to complementary field effect transistors formed by ion implantation, and in particular to a structure and method of fabrication which permit high packing density." Ex. 1005, 1:5–8. According to Payne, CMOS devices "comprise n-channel and p-channel devices formed in the same substrate," and are traditionally "formed by diffusion or implantation of a p-type 'tub' in an n-type silicon substrate so that the n-channel device is fabricated in the tub and the p-channel device is fabricated in the adjacent portion of the substrate." Ex. 1005, 1:9–18. This method "led to the constraint that the concentration at the surface in the tub was much greater than the surface concentration of the substrate." Ex. 1005, 1:18–21. Payne states that one proposed method to avoid this constraint was "to form the p-channel device in a second tub of n-conductivity type and higher impurity concentration than a more lightly doped substrate." Ex. 1005, 1:24–27. "Using either the single tub or twin tub approach, a considerable amount of semiconductor area is needed due to the fact that the tub impurities will diffuse laterally as well as vertically during the drive-in to establish the desired tub depth." Ex. 1005, 1:34–38. Payne states that "[t]his is particularly troublesome in the twin-tub process since any significant overlap of the two tubs results in decreased doping concentration of each tub at the boundaries which can cause punch through or field inversion

channeling during device operation." Ex. 1005, 1:39–43. This problem required large spacing of the source and drain regions of the transistors, and Payne seeks to avoid this need by "provid[ing] a CMOS structure and method of manufacture which requires little semiconductor space." Ex. 1005, 1:43–54.

In particular, Payne's "device is fabricated in a silicon semiconductor substrate, 10, of 'N–' conductivity type which . . . is typically approximately 20 mils thick." Ex. 1005, 2:56–60. On this substrate, tub regions 15 and 17 are formed, one "having the same conductivity type as the substrate but higher impurity concentration" and the other having the opposite conductivity type. Ex. 1005, 3:35–39, 4:12–14, Figs. 2–5. Surface regions 18 and 20 are formed "covering essentially the same area as" tubs 15 and 17, with each region having the same conductivity type as the tub over which it lies but with higher impurity concentration. Ex. 1005, 4:31–5:17, Figs. 7–9, 11. Payne's CMOS device includes a "p-channel device [that] includes source and drain regions, 21 and 22, respectively, of P+ conductivity type formed with[in] the N surface region, 18" and an "n-channel device [that] includes source and drain regions, 23 and 24, of N+ conductivity type formed within the P surface region 20." Ex. 1005, 5:21–27, Fig. 10. Payne states that this approach can reduce the spacing between "source and drain regions of adjacent devices" from 12 microns to 5 microns. Ex. 1005, 5:54–6:19, Figs. 12, 13.

2. *Analysis*

a. *Claim 1*

Petitioner argues that Payne would have taught or suggested the limitations of claim 1. Pet. 13–41; Pet. Reply 18–19. Patent Owner

disagrees. PO Resp. 32–36; PO Sur-reply 12–19. We address the parties' arguments and evidence below.

The preamble of claim 1 recites "[a] CMOS Semiconductor device comprising." Ex. 1001, 4:13. Petitioner argues that Payne teaches the preamble, directing us to Payne's disclosure that "a primary object of [its] invention [is] to provide a CMOS structure and method of manufacture which requires little semiconductor space." Pet. 13 (quoting Ex. 1005, 1:51–54). Patent Owner does not dispute this argument. We find the record supports Petitioner's position that Payne teaches the preamble of claim 1.

Claim 1 recites "a surface layer." Ex. 1001, 4:14. Petitioner argues that Payne teaches or suggests this limitation, and Patent Owner does not dispute this argument. Pet. 14–16. Petitioner directs us to evidence that sufficiently shows that Payne discloses a surface layer similar to that in the '195 patent. Ex. 1001, Fig. 5(b); Ex. 1003 ¶¶ 73–75; Ex. 1005, 2:50–60, 5:21–27, 6:57–59, Fig. 10; Ex. 1030, 6, 7, 9, 12, 13; Ex. 1033. In particular, Figure 5(b) of the '195 patent and Payne's Figure 10 show quite similar structures, and Patent Owner's district court claim construction brief identified the relevant structure in Figure 5(b) of the '195 patent as a surface layer. Ex. 1030, 7, 12. We find the record supports Petitioner's contention that Payne teaches this limitation of claim 1.

Claim 1 next recites "a substrate." Ex. 1001, 4:15. Petitioner argues that Payne teaches this limitation, and Patent Owner does not dispute this argument. Pet. 16–17. Payne discloses fabricating its CMOS device "in a silicon semiconductor substrate." Ex. 1005, 1:60–65, 2:50–60, Fig. 10. We find the record supports Petitioner's contention that Payne teaches this limitation of claim 1.

Claim 1 recites "an active region including a source and a drain, disposed on one surface of said surface layer." Ex. 1001, 4:16–17. Petitioner argues that Payne teaches this limitation, and Patent Owner does not dispute this argument. Pet. 17–20. Payne discloses forming p-channel and n-channel transistors, each with source and drain regions. Ex. 1005, 1:5–19, 5:18–29, 6:57–59. Petitioner directs us to evidence that a person of ordinary skill in the art would have considered the transistors to be active regions. Ex. 1001, Fig. 5(b); Ex. 1030, 6–7, 11; Ex. 1003 ¶¶ 79–83; Ex. 1008B, 299–300. We find the record supports Petitioner's contention that Payne teaches this limitation of claim 1.

Claim 1 recites "a single drift layer disposed between the other surface of said surface layer and said substrate." Ex. 1001, 4:18–19. Petitioner argues that Payne discloses or suggests this limitation, and Patent Owner does not dispute this argument. Pet. 21–23. Payne discloses a first tub region with a surface region in it that, on the present record, appears quite similar to the single drift layer and well region of the '195 patent. *Compare* Ex. 1003 ¶ 86–88; Ex. 1005, 3:28–43, 4:19–39, 5:7–17, 5:44–50, Fig. 10, *with* Ex. 1001, Fig. 5(b); Ex. 1030, 7, 11. We find the record supports Petitioner's contention that Payne teaches this limitation of claim 1.

Claim 1 further recites "said drift layer having a graded concentration of dopants extending between said surface layer and said substrate, said drift layer further having a first static unidirectional electric drift field to aid the movement of minority carriers from said surface layer to said substrate." Ex. 1001, 4:19–24. Petitioner first argues the '195 patent admits that graded-dopant concentrations were known, and that it was known to grade the dopant concentration in CMOS devices to affect the movement of minority carriers. Pet. 23 (citing Ex. 1001, 1:34–2:5, 2:13–15, Figs. 1, 3(a)–3(d)).

Petitioner also argues that Payne teaches or suggests a graded-dopant concentration because Payne's Figure 11 shows a dopant concentration in tubs 15, 17 that decreases with increasing depth. Pet. 24–26 (citing Ex. 1005, 2:38–41, 2:56–59, 5:14–17, 5:48–57, Figs. 10, 11; Ex. 1003 ¶¶ 90–94). Patent Owner does not dispute that Payne discloses a graded-dopant concentration, but, rather, disputes that Payne discloses using graded dopants to move carriers or grading at the surface. PO Resp. 1.

Regarding the "first static unidirectional electric drift field to aid the movement of minority carriers" limitation, Petitioner relies on the patent file history and cited references, arguing that "Payne's downward-sloping graded-dopant concentration aids the movement of minority carriers from the surface layer to the substrate to the same extent to which Applicant relied on the prior art and admitted to the Patent Office that such carrier movement would occur under the same scenario." Pet. 27. In particular, Petitioner directs us to the representation to the Patent Office that "the graded dopant concentration <u>itself</u> creates a ***'built-in' electrical field*** that forces the movement of carriers into a particular direction, whereby ***the 'direction' of the electrical field and the resulting direction of the carrier movement depends solely on the slope of the graded concentration of dopant***." Pet. 27 (quoting Ex. 1002, 289–290). Petitioner also asserts that the direction in which carriers are forced with the concentration profile disclosed in Payne is downward, toward the substrate and away from the surface. Pet. 27–33 (quoting and citing Ex. 1002, 237–238, 253–254, 289–290; citing Ex. 1003 ¶¶ 95–107; Ex. 1005, 5:7–17, 5:44–55; Ex. 1009, 2:11–16, 2:67–3:18, Fig. 2; Ex. 1010, 2:27–32, 5:14–22; Ex. 1013, 431; Ex. 1030, 7, 24; Ex. 1005, Fig. 11).

Patent Owner argues that Petitioner fails to show that Payne discloses the "aid in the movement of minority carriers" claim limitation. PO Resp. 10, 32–36. Specifically, Patent Owner contends that "the Petition relies entirely on Greenthread's supposed admissions" during patent prosecution without analyzing anything in Payne for the claimed "aid the movement of [minority] carriers." PO Resp. 33 (citing Pet. 27); *see* PO Sur-reply 12–13, 15. Patent Owner asserts that Petitioner mischaracterizes the prosecution history as saying "a 'downward sloping dopant concentration' would 'sweep carriers down into the substrate'" when the prosecution history statements said "the contrary, it said the movement will depend on the slope of the 'graded concentration.'" PO Sur-reply 14 (citing Ex. 1016, 289–90). Additionally, Patent Owner contends that we should reject the testimony from Petitioner's declarant, Dr. Blalock, because he did not calculate the slope of Payne's graded concentration curve, but only looked at the direction of the slope of the graded dopant concentration, i.e., the direction of force acting on the carriers, and not the numerical value of the slope, i.e., the magnitude of the force acting on the carriers, or the presence of other possible forces acting on the carriers. PO Resp. 22–23, 33–35. Patent Owner contends this approach is flawed because Dr. Blalock failed to determine whether there is a "net force" acting on the carriers to actually aid the movement of carriers in a particular direction. *Id.* at 34 (citing Ex. 2064 ¶¶ 54–58); PO Sur-reply 1. Patent Owner contends that both Dr. Blalock and Dr. Glew agree that "the magnitude of the slope is essential to determine the magnitude of the force the dopant gradient places on the carrier and thus the net force." PO Resp. 34 (citing Ex. 2064 ¶¶ 54–58); PO Sur-reply 1.

Patent Owner contends that Payne's dopant concentration is uniform in the surface layer, thus "there is no evidence that [Payne] is *even* 'capable' of moving minority carriers ***from*** the 'surface layer.'" PO Sur-reply 2. According to Patent Owner, "Payne *never* mentions moving carriers" and Petitioner relies entirely on Payne's Figures 10 and 11, which, Patent Owner asserts, discloses only a single concentration in the surface layer. PO Sur-reply 12–13. Patent Owner contends that the impurity concentrations and depths that Payne discloses cannot be placed on Payne's graded concentration chart in Figure 11 because it lacks a scale and numbers. PO Sur-reply 13. Thus, Patent Owner asserts that even if Payne's concentration layer is graded within the "surface layer," Payne does not disclose using the grading to affect carrier movement and Petitioner's reliance on the prosecution history is insufficient evidence that it would move carriers from the "surface layer" because the prosecution history "said the movement will depend on the slope of the 'graded concentration.'" PO Sur-reply 13–14 (citing Ex. 1002,[19] 289–290). Patent Owner contends that Petitioner failed to meet its burden because it did not address the effect Payne would have on an electron, which is the minority carrier because the relevant transistor in Payne is a PMOS. Sur-reply 15. In the context of the '195 patent, Patent Owner asserts that it is the holes that are the minority carrier that have to be swept into the substrate for the NMOS transistor of Figure 5(b). PO Sur-reply 16–19 (citing Ex. 1001, Fig. 5(b); Ex. 2064 ¶ 36 n.4; Ex. 1054, 74:24–75:5).

[19] Patent Owner's citation to Ex. 1016 is understood to be referencing Ex. 1002 in this record, the prosecution history of the '195 patent.

After considering the parties' arguments and the cited evidence of record, we determine that Petitioner has shown sufficiently that Payne discloses or at least fairly suggests the "first static unidirectional electric drift field to aid the movement of minority carriers from said surface layer to said substrate" limitation of claim 1.

Contrary to Patent Owner's assertions, Petitioner is not arguing or assuming that "'graded dopant concentrations' equals 'aid carrier movement,'" nor is Petitioner attempting to read out the "aid the movement of minority carriers" element. PO Resp. 32–34; PO Sur-reply 12–14. Instead, Petitioner presents evidence demonstrating that a graded dopant concentration results in an electric field, which exerts a force on charged particles that will move, or aid movement, of the carriers in a specific direction. Pet. 26–31. For example, Petitioner correctly indicates that during prosecution, Patent Owner stated that "the graded dopant concentration <u>itself</u> creates a 'built-in' electrical field that forces the movement of carriers into a particular direction," and that "this inherent 'built-in' unidirectional field is the additional parameter for ensuring that all minority carriers are being moved in one direction." Ex. 1002, 289–290.

Additionally, Dr. Blalock offered an explanation of the scientific relationship between aiding the movement of carriers and a graded dopant concentration, stating "if you have a downward-sloping graded dopant concentration, we know from the basic physics that that will lead to an electric field and that will create a force, which tends to move the carriers." Ex. 2058, 166:1–6; Ex. 1003 ¶¶ 95–97. This testimony is consistent with the statement in the '195 patent itself that the "relative slope of the donor concentration . . . creates a suitable aiding drift electric field." Ex. 1001, 2:42–44.

Patent Owner attempts to obfuscate the statements made during prosecution, arguing "[t]he prosecution history cannot overcome the clear claim language distinguishing the 'graded' and 'aided' terms." PO Resp. 19. Patent Owner contends "[t]he point of the sentence Greenthread actually wrote is that a 'graded dopant concentration' 'must move' carriers *to meet the claim limitation*, not that any and every graded dopant concentration 'must move' carriers." *Id.* at 19–20. These arguments, however, are unavailing. Petitioner has accurately quoted the statements made during prosecution, and those statements speak for themselves—*supporting Petitioner*. *See* Pet. 27–28; Ex. 1002, 289–290.

As to Patent Owner's argument that Petitioner and Dr. Blalock improperly restrict their analysis to the direction of the slope in asserting that Payne discloses aiding the movement of minority carriers, we disagree. According to Patent Owner, "a mere downward sloping gradient does *not* necessarily 'aid the movement of minority carriers'" because "other forces and factors besides a dopant gradient act on a carrier, and that 'additional force' '*might be larger than the force created by the gradient*.'" PO Resp. 11–13, 22 (quoting Ex. 2058, 137–138). Patent Owner thus argues that Petitioner and Dr. Blalock fail to provide sufficient evidence to support disclosure of this limitation by Payne because they do not address the magnitude of the force created by the graded dopant concentration, whether any other forces are acting on the carriers, and the magnitude of those forces. PO Resp. 11–17, 22–23.

Patent Owner's arguments, however, are inconsistent with the representations it made during prosecution. In particular, during prosecution, Patent Owner argued that a graded dopant concentration creates an electric field that forces the movement of carriers in a particular direction, without

any discussion of calculating the numerical magnitude of the slope, whether any other forces are present, or the comparative magnitude of all forces present. *See* Ex. 1002, 289–290. Furthermore, although Patent Owner now directs us to the Examiner's statement that "movement of minority carriers is affected by multiple forces and fields, . . . it does not appear that simply the presence of a 'unidirectional drift field' in itself can achieve 'drawing all minority carriers from said surface layer to said substrate,'" to support its arguments (*see* PO Resp. 16), Patent Owner previously represented to the Patent Office that it disagreed with the Examiner's position (Ex. 1002, 289).

Additionally, Patent Owner does not direct us to any discussion in the '195 patent regarding a specific slope value that is necessary to "aid the movement of minority carriers," either in isolation or in the presence of other forces that may act upon the carriers. Nor does Patent Owner direct us to any authority suggesting we should demand more from the prior art disclosure in Payne than is provided in the disclosure of the '195 patent.

Patent Owner's assertion that Payne's graded dopant is insufficient to aid movement of minority carriers because Payne's dopant concentration is uniform ***in*** the surface layer is not relevant to our analysis. PO Sur-reply 2. The plain meaning of claim 1's recitation "from said surface layer" does not require aiding movement ***through*** the surface layer. Accordingly, a graded dopant concentration is not required to continue through the surface layer in order for claim 1 to read on Payne.

In view of this, we determine Petitioner's assertion that Payne discloses a "unidirectional electric drift field to aid the movement of minority carriers" because Payne has a graded dopant concentration is reasonable and sufficient.

Patent Owner challenges the Petition on the basis that Petitioner and Dr. Blalock did not calculate the slope of Payne's graded concentration curve to determine a magnitude of the force on the carrier and a net force. PO Resp. 33–34. However, there is no evidence on this record that any other forces are present or acting upon the carriers in Payne's system. Instead, Patent Owner asserts that "Payne *never* mentions moving carriers." PO Sur-Reply 12.

We credit Dr. Blalock's testimony that "the graded dopant concentration led to an electric field, which assisted, aided, actually put a little force on the carriers to help them move from the first surface down towards the -- to the second surface of the substrate." Ex. 2058, 72:3–9, 101:12–16 ("I mean, we're talking about graded concentrations and how that leads to an electric field which exerts a force on carriers and so, yeah, those are fundamental aspects of how a semiconductor operates."); Ex. 1003 ¶¶ 95–109. Dr. Blalock's testimony is consistent with, and supported by, other evidence in the record. Ex. 1054, 83:13–89:13, 92:2–97:8, 102:2-109:14, 109:25–116:3, 121:19–123:15.

For all of the foregoing reasons, Petitioner has shown sufficiently that Payne teaches or at least fairly suggests the "said drift layer having a graded concentration of dopants extending between said surface layer and said substrate, said drift layer further having a first static unidirectional electric drift field to aid the movement of minority carriers from said surface layer to said substrate" limitation of claim 1.

Lastly, claim 1 recites "at least one well region disposed in said single drift layer, said well region having a graded concentration of dopants and a second static unidirectional electric drift field to aid the movement of minority carriers from said surface layer to said substrate." Ex. 1001,

4:25–29. Petitioner contends that Payne's surface region 18 disposed in tub region 15 is an example of a well region disposed in Payne's single drift layer, and that this layer has a graded dopant concentration. Pet. 34–38 (citing Ex. 1001, Fig. 5(b); Ex. 1030, 7; Ex. 1005, 1:65–68, 4:31–39, 4:63–5:14, 5:44–55, Figs. 10–11). Petitioner further contends that Payne discloses the recited well region to the same extent as the well region that Patent Owner identifies in Figure 5(b) of the '195 patent. Pet. 35–36. Patent Owner does not dispute these arguments.

Relying on the same arguments discussed above, including Patent Owner's arguments during prosecution and in its district court claim construction brief, Petitioner contends that the presence of the downward-sloping graded-dopant concentration in the well region creates a second "static unidirectional electric drift field that aids the movement of minority carriers from the surface layer to the substrate." Pet. 39–41; Ex. 1003 ¶¶ 118–122.

Patent Owner relies on the same arguments addressed above (PO Resp. 32–36) and that Payne's Figure 11 does not disclose a graded concentration that "would actually aid carrier movement where it is required—***from*** the 'surface layer'" because "Payne *only* discloses using a *single* concentration in the 'surface layer'" rather than a graded concentration (PO Sur-reply 12–13). According to Patent Owner, the single concentration in Payne's surface layer is disclosed to be $0.5\text{-}5X10^{16}$ ions/cm^3. PO Sur-reply 13 (citing Ex. 1005, 5:51–52).

As discussed above, claim 1 requires "a graded concentration of dopants . . . ***from*** said surface layer to said substrate" not a graded concentration of dopants ***through*** said surface layer. Based on the plain

meaning of the claim language, Petitioner has shown by a preponderance of the evidence that Payne teaches this limitation of claim 1.

Upon review of Petitioner's arguments and supporting evidence, we determine that Petitioner demonstrates by a preponderance of the evidence that claim 1 would have been unpatentable as obvious over Payne.

b. *Claim 2*

Claim 2 depends from claim 1 and further recites that "said drift layer is a deeply-implanted layer." Ex. 1001, 4:31. Petitioner argues that Payne teaches a nested well structure formed by multiple distinct ion-implantation process steps with tub regions 15 and 17 illustrated in Figures 10 and 11 extending a depth of 3–8 µm. Pet. 42–43 (citing Ex. 1005 Figs. 2–11, 1:5–6, 3:17–5:17, 5:48–50, 3:28–42, 4:3–25). According to Petitioner, Payne's nested well structure in Figure 10 matches the '195 patent's Figure 5(b), thus Payne's tub region 15 is a deeply-implanted layer to the same extent the '195 patent's Figure 5(b) shows a deeply-implanted layer. *Id.* (citing Ex. 1003 ¶ 127). Patent Owner does not dispute these arguments. In view of the foregoing, Petitioner has shown sufficiently that Payne teaches the additional limitation of claim 2.

c. *Claims 4 and 5*

Claim 4 depends from claim 1 and recites that "said graded concentration follows a linear gradient." Ex. 1001, 4:35. Claim 5 also depends from claim 1 and recites "said graded concentration follows a quasi-linear gradient." Ex. 1001, 4:37. Petitioner argues that Payne's Figure 11 discloses a graded-dopant profile where the dopant concentration decreases gradually in a linear or nearly-linear (quasilinear) manner in segments, which are well-known gradients, with smaller segments becoming even

more linear/quasilinear. Pet. 43–44 (citing Ex. 1003 ¶¶ 126–128). Petitioner contends that it would have been within the level of skill of a person having ordinary skill in the art to manufacture a CMOS device with such a profile in view of the ’195 patent lacking an illustration or process for obtaining it and Payne’s disclosure of the ion-implantation process, which enables different dopant profiles to be fabricated as needed. *Id.* at 44–46 (citing Ex. 1005, 1:1–9; Ex. 1008A, 371, 373; Ex. 1001, 2:40–42). Patent Owner does not dispute these arguments. In view of the foregoing, Petitioner has shown sufficiently that Payne teaches the additional limitation of claim 4.

d. *Claim 6*

Claim 6 depends from claim 1 and further recites “said graded concentration follows an exponential gradient.” Ex. 1001, 4:39. Petitioner argues that Payne teaches a dopant profile that follows a rapidly changing, exponential gradient in at least the border region of the deep well and substrate and the border region of the shallow well and the deep well as shown in Payne’s Figure 11. Pet. 46–47 (citing Ex. 1005, Fig. 11; Ex. 1003 ¶¶ 131–134). Petitioner contends that it would have been within the level of skill of a person having ordinary skill in the art to manufacture a CMOS device with such a profile in view of the ’195 patent lacking an illustration or process for obtaining it and Payne’s disclosure of the ion-implantation process, which enables different dopant profiles to be fabricated as needed. *Id.* at 47–49 (citing Ex. 1005, 1:1–9; Ex. 1008A, 371, 373; Ex. 1001, 2:40–42; Ex. ¶¶ 132–133). Patent Owner does not dispute these arguments. In view of the foregoing, Petitioner has shown sufficiently that Payne teaches the additional limitation of claim 6.

3. *Conclusion*

Upon review of Petitioner's arguments and supporting evidence, we determine that the preponderance of the evidence supports Petitioner's position that claims 1, 2, and 4–6 would have been unpatentable as obvious over Payne notwithstanding Patent Owner's proffered objective indicia of nonobviousness discussed above.

F. *Claims 2 and 3: Obviousness in view of Payne and Wolf*

Petitioner contends that the subject matter of claims 2 and 3 would have been obvious in view of the combined disclosures of Payne and Wolf. Pet. 82–87. Patent Owner does not separately dispute or challenge Petitioner's arguments or evidence beyond the arguments discussed above with regard to Payne. *See* PO Resp. 32–36; PO Sur-reply 12–19.

1. *Wolf (Ex. 1008)*

Wolf is a four-volume textbook titled "Silicon Processing for the VLSI Era." Ex. 1008. A portion of the textbook focuses on CMOS technology. Ex. 1008A, 807–40.

2. *Analysis*

Petitioner contends that Payne is directed to CMOS devices, and Wolf, which published over 20 years after Payne was filed, teaches "fundamental features and concepts related to semiconductor manufacturing, with particular emphasis on CMOS." Pet. 82. According to Petitioner, a person of ordinary skill in the art "would have therefore understood and expected that the teachings of Wolf would apply to Payne, and would have looked to Wolf for advances in CMOS technology and additional process details to the extent not covered in Payne." *Id.*

a. *Claim 2*

Claim 2 depends from claim 1 and further recites that "said drift layer is a deeply-implanted layer." Ex. 1001, 4:31. Petitioner argues that Payne discloses forming deep wells by ion implantation and that Wolf teaches using high-energy ion-implantation to implant ions deeper for CMOS wells to minimize damage to surface structures. Pet. 83 (citing Ex. 1005, 5:48–50, 3:28–42, 4:3–25; Ex. 1008A, 403, 406–407, 830, Table 10.2). Petitioner argues that a person of ordinary skill in the art would have used Wolf's "high-energy implantation technique to form Payne's tub regions 15/17 as deeply-implanted layers to realize the benefits of avoiding damage to critical near-surface structures while establishing a desired dopant profile" as taught by Wolf. *Id.* at 84 (citing Ex. 1003 ¶¶ 208–212). According to Petitioner, the combination of Payne and Wolf merely combines known prior art elements with the use of a known technique, thus a person having ordinary skill in the art would have had a reasonable expectation of success of using Wolf's high-energy ion-implantation processes to form Payne's deep wells. *Id.*

Patent Owner does not present any additional challenges to Petitioner's arguments and evidence. *See generally*, PO Resp.; PO Sur-reply.

Upon review of the arguments and supporting evidence, we determine that Petitioner demonstrates sufficiently that Payne and Wolf disclose or suggest the limitations of claim 2, and that a person of ordinary skill in the art would have had reason to combine the teachings of Payne and Wolf, and would have had a reasonable expectation of successfully achieving the claimed invention.

b. *Claim 3*

Claim 3 depends from claim 1 and further recites that "said drift layer is an epitaxial layer." Ex. 1001, 4:33. Petitioner contends that a person of ordinary skill in the art would have been motivated to fabricate Payne's nested well structure, which allows transistors to be closer to improve packing density, using an epitaxial substrate to provide latchup protection. Pet. 86 (citing Ex. 1003 ¶¶ 217–219). Petitioner contends Wolf discloses packing density has the drawback of increased latchup susceptibility and that heavily doped substrates with a more lightly doped surface epitaxial layer suppress latchup in CMOS. *Id.* at 86–87 (citing Ex. 1008B, 381, 385, 387–88; Ex. 1003 ¶¶ 217–219). According to Petitioner, a person having ordinary skill in the art would have had a reasonable expectation of success because Wolf shows that it was known to use n-type epitaxial substrates to implement twin-well CMOS devices such as Payne. *Id.* at 87 (citing Ex. 1008B, 389).

Patent Owner does not present any additional challenges to Petitioner's arguments and evidence. *See generally* PO Resp.; PO Sur-reply.

Upon review of the arguments and supporting evidence, we determine that the preponderance of the evidence supports Petitioner's position that Payne and Wolf disclose or suggest the limitations of claim 3, that a person of ordinary skill in the art would have had reason to combine the teachings of Payne and Wolf, and would have had a reasonable expectation of successfully achieving the claimed invention.

3. *Conclusion*

Based on the foregoing, we determine that the preponderance of the evidence supports Petitioner's position that claims 2 and 3 would have been

unpatentable as obvious over the combination of Payne and Wolf notwithstanding Patent Owner's proffered objective indicia of nonobviousness discussed above.

G. *Claim 3: Obviousness in view of Payne and Parrillo*

Claim 3 depends from claim 1 and further recites that "said drift layer is an epitaxial layer." Ex. 1001, 4:32–33. Petitioner contends that the subject matter of claim 3 would have been obvious in view of the combined disclosures of Payne and Parrillo. Pet. 88–90. Patent Owner does not separately dispute or challenge Petitioner's arguments or evidence beyond the arguments discussed above with regard to Payne. *See* PO Resp. 32–36; PO Sur-reply 12–19.

1. *Parrillo*

Parillo is a U.S. Patent titled "Method for Fabricating Complementary Field Effect Transistor Devices." Ex. 1025, code (54). Parillo is directed to "an eight-mask twin-tub CMOS process which forms contiguous p- and n-tubs in a relatively lightly doped bulk region in a self-aligned manner using a single masking step." *Id.* at code (57).

2. *Analysis*

Petitioner contends that Payne is directed to improving twin-well or twin-tub CMOS semiconductor technology with the addition of a shallow well in each deep well allowing transistors to be closer to improve packing density. Pet. 88 (citing Ex. 1005, 1:5–14, 1:59–2:28, 6:20–21). Petitioner contends that Parrillo teaches a CMOS semiconductor device with "twin-tubs" formed in an epitaxial layer of Parrillo's epitaxial substrate. Pet. 88–89 (citing Ex. 1025, Fig. 5, 3:19–41, 3:45–4:14, 3:28–33; Ex. ¶¶ 223–224). According to Petitioner, a person of ordinary skill in the art "would have

been motivated to fabricate Payne's "twin-tub" device using Parrillo's epitaxial substrate to protect Payne's high-density CMOS device, which POSITAs knew were susceptible to latchup failures due to the close proximity of their transistors." *Id.* at 89 (quoting Ex. 1003 ¶¶ 222–225; Ex. 1025, 3:38–41; Ex. 1008B, 381, 414). Petitioner contends that the combination of Parrillo and Payne is "a simple substitution of one known element (n- epitaxial substrate) for another (Payne's n—substrate) to obtain predictable results." *Id.* at 90.

Patent Owner does not present any additional challenges to Petitioner's arguments and evidence. *See generally* PO Resp.; PO Sur-reply.

Upon review of the arguments and supporting evidence, we determine that the preponderance of the evidence supports Petitioner's position that Payne and Parrillo disclose or suggest the limitations of claim 3, notwithstanding Patent Owner's proffered objective indicia of nonobviousness discussed above, that a person of ordinary skill in the art would have had reason to combine the teachings of Payne and Parrillo for the stated benefit taught by Payne, and would have had a reasonable expectation of successfully achieving the claimed invention.

H. *Claims 1–6: Obviousness in view of Sakai and Kawagoe*

Petitioner contends that the subject matter of claims 1–6 would have been obvious in view of the combined disclosures of Sakai and Kawagoe. Pet. 49–82. Patent Owner asserts that Petitioner's Sakai and Kawagoe-based arguments are deficient because Kawagoe does not teach the "aid the movement of minority carriers" limitation of claim 1. PO Resp. 23–32.

1. *Sakai (Ex. 1006)*

Sakai "relates to . . . a CMOS, in which an isolation region between two well regions of opposite conductivity types, each including an insulated gate field effect transistor . . . , is made very small in size to make possible a high-speed operation and large scale integration." Ex. 1006, 1:7–13. According to Sakai, "[i]n a conventional device . . . , in order to prevent the punch through and short channel effect," doped regions must be placed at least "several micrometers" apart, "which makes it difficult to increase the packing density of CMOS." *Id.* at 1:26–43. To increase the packing density, Sakai describes a process in which the CMOS is formed in "a double well structure, in which" shallow wells are formed within deep wells, and source and drain regions are formed within the shallow wells. *Id.* at 1:55–2:5.

2. *Kawagoe (Ex. 1007)*

Kawagoe discloses a process for manufacturing a semiconductor integrated circuit device using an epitaxial wafer, i.e., a semiconductor wafer having a semiconductor single crystal epitaxial layer grown over a polished semiconductor substrate. Ex. 1007, 1:13–27, 2:31–35. According to Kawagoe, "[t]he epitaxial wafer is advantageous in that it is excellent in suppressing the soft errors and resisting to the latchup,"[20] and also has "excellent breakdown characteristics" that "drastically reduce the defect

[20] Petitioner submits Exhibit 1013 (Wang and Agrawal, *Single Event Upset: An Embedded Tutorial*, 21st Int'l Conf on VLSI Design, 429–434, IEEE 2008), which explains that "soft errors" are "random and not related to permanent hardware faults" and "[t]heir causes may be internal (e.g., interconnect coupling) or external (e.g., cosmic radiation)," including "alpha particles [that] are emitted when the nucleus of an unstable isotope decays to a lower energy state." Ex. 1013, code (57), 430.

density of the gate insulating film" of a semiconductor integrated device. *Id.* at 1:33–40.

Kawagoe discloses various "representative" processes, including processes in which the single crystal (epitaxial) layer contains an impurity of the same type and in the same concentration as the substrate body. *Id.* at 2:55–3:9. According to Kawagoe, the impurity concentration of the substrate body can be made higher than that of the epitaxial layer "so that the resistance of the semiconductor substrate body can be relatively lowered to improve the resistance to the latchup." *Id.* at 4:1–8. Kawagoe discloses a process for manufacturing a semiconductor integrated circuit device including a step of forming a semiconductor region (well) extending below the epitaxial layer and having an impurity concentration that decreases with increasing depth below the epitaxial layer. *Id.* at 3:10–25. According to Kawagoe, the well can be used for forming a complementary Metal-Oxide-Semiconductor.Field-Effect-Transistor ("MOS.FET") circuit. *Id.* at 3:32–38.

Kawagoe describes seven embodiments, including Embodiment 1 (*Id.* at 6:41–12:40, Figs. 1–8) and Embodiment 4 (*Id.* at 14:46–19:63, Figs. 16–25). Figure 1, reproduced below, depicts the device of Embodiment 1.

FIG. 1

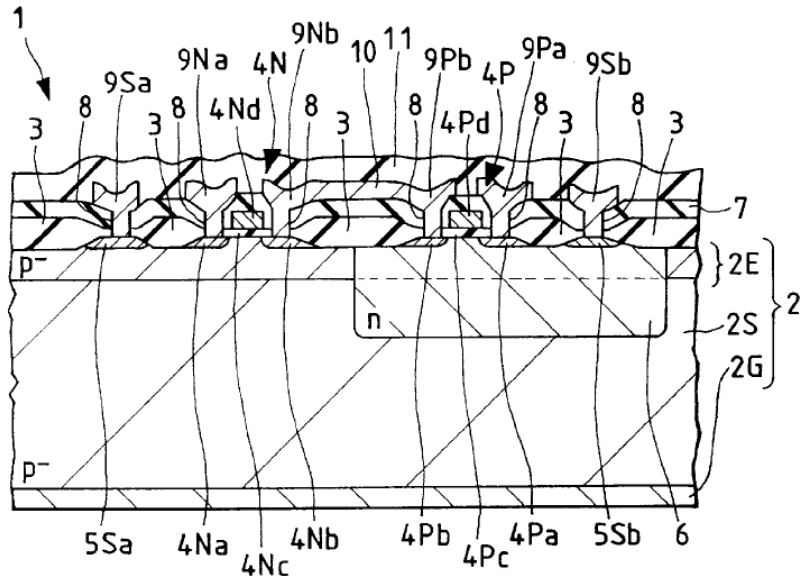

Figure 1 depicts "an essential portion of a semiconductor integrated circuit device" that includes semiconductor substrate body 2S, epitaxial layer 2E, and gettering layer 2G. Ex. 1007, 6:51–56, Fig. 1. Substrate body 2S and epitaxial layer 2E are doped with a p-type impurity in equal concentrations. *Id.* at 6:60–7:3, 10:51–55, 11:12–16. Embodiment 1 includes n-channel MOS.FET ("nMOS") 4N and p-channel MOS.FET ("pMOS") 4P, the latter being formed in n-well 6, which is doped with n-type impurity and extends below the epitaxial layer. *Id.* at 8:46–52, 9:32–40, 11:18–24, 11:43–50, Figs. 1, 5, 7.

Figure 23, reproduced below, depicts a semiconductor device of Embodiment 4 in the process of manufacture. *Id.* at 17:11–13.

FIG. 23

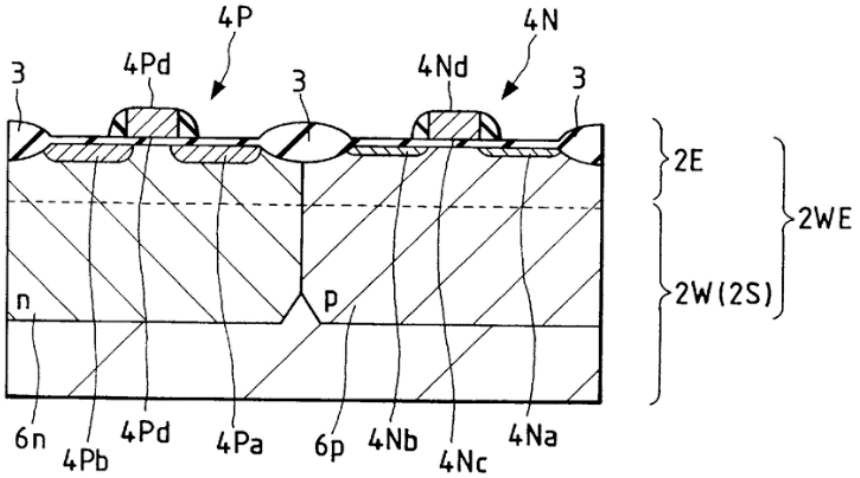

Figure 23 shows a step in a process for manufacturing the semiconductor integrated circuit device of Embodiment 4, including p-well 6*p* formed with nMOS 4N and n-well 6*n* formed with pMOS 4P. Ex. 1007, 6:1–4, 15:26–32, 18:3–35. Substrate body 2S and epitaxial layer 2E are doped with p-type impurity, and the impurity concentration of substrate body 2S is higher than that of epitaxial layer 2E "to improve the resistance to the latchup." *Id.* at 14:64–15:6, 15:13–17, 16:16–21, 19:59–63, Fig. 17. In Embodiment 4, the impurity concentration in p-well 6*p* and n-well 6*n* decreases with increasing depth below the epitaxial layer. *Id.* at 15:62–16:15, 17:55–61, Fig. 17. Kawagoe discloses that the concentration gradient reduces soft errors by attracting carriers (electrons) to the substrate and preventing them from entering the p-well. *Id.* at 16:2–11.

Petitioner relies on Kawagoe Figure 17, which is reproduced below and illustrates properties of the semiconductor device of Embodiment 4.

FIG. 17

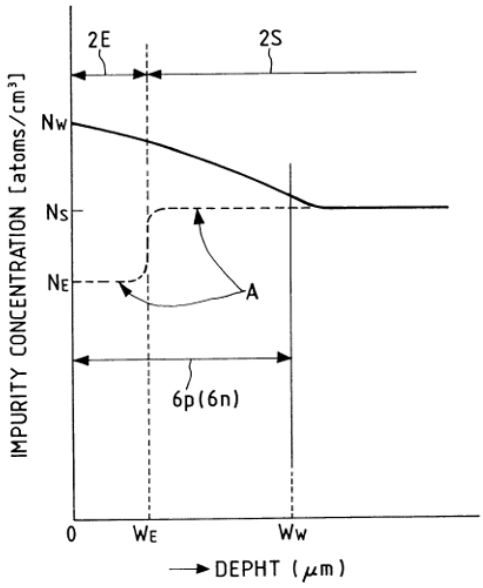

Figure 17 is a plot of impurity concentration as a function of depth in a semiconductor integrated circuit device, which shows "the p-well 6*p* and n-well 6*n* have their impurity concentrations gradually lowered in the depthwise direction from the principal surface (having an impurity concentration N_W) of the epitaxial layer 2E." Ex. 1007, 5:41–45, 15:62–16:40.

3. *Analysis*

a. *Claim 1*

Petitioner presents arguments and evidence in support of its contention that Sakai and Kawagoe disclose or at least fairly suggest each limitation of claim 1, and that a person of ordinary skill in the art would have had reason to combine the teachings of the references with a reasonable expectation of success in doing so. Pet. 49–74; Pet. Reply 7–18. Patent Owner disagrees. PO Resp. 23–32; PO Sur-reply 7–19. We address the parties' arguments and evidence below.

The preamble of claim 1 recites "[a] CMOS Semiconductor device comprising." Ex. 1001, 4:13. Petitioner contends Sakai is directed to CMOS semiconductor devices. Pet. 49–50 (citing Ex. 1006, code (54), 1:6–13, 1:55–2:5, 4:15–29; Ex. 1003 ¶¶ 136–139). Patent Owner does not dispute this argument. We find the record supports Petitioner's position that the Sakai and Kawagoe combination teaches the preamble of claim 1.

Claim 1 recites "a surface layer." Ex. 1001, 4:14. Petitioner refers to Patent Owner's definition of "surface layer" to mean "a layer at the surface of the silicon" or "a layer at the surface of the semiconductor device." Pet. 51 (citing Ex. 1030, 6, 9, 12, 13; Ex. 1033). Petitioner argues that the surface of Sakai's silicon substrate in which Sakai's source and drain regions are located is a surface layer because Sakai's Figure 10D matches the surface layer identified in the '195 patent's Figure 5(b). Pet. 51–53 (citing Ex. 1006, Fig. 10D, 1:28–30, 1:68–2:5, 4:25-29, 5:53–55, 5:59, 6:16–17, 2:51–58, 3:52–4:14, 5:24–32, 6:54–55; Ex. 1003 ¶¶ 140–142). Patent Owner does not dispute this argument. We find the record supports Petitioner's position that the Sakai and Kawagoe combination teaches this limitation of claim 1.

Claim 1 next recites "a substrate." Ex. 1001, 4:15. Petitioner argues that Sakai satisfies this claim element because it discloses a silicon substrate made of N-silicon or P-silicon. Pet. 53 (citing Ex. 1006, 1:61, 4:13–14, 5:59, 6:26–27; Ex. 1003 ¶¶ 143–145). Petitioner contends Sakai's substrate (1) in Figure 10D matches the '195 patent's identification of the substrate in Figure 5(b) as "an underlying layer" pursuant to Patent Owner's proposed construction of "a substrate." *Id.* at 53–54 (citing Ex. 1001, Fig. 5(b); Ex. 1006, Fig. 10D; Ex. 1033, 1). Patent Owner does not dispute this

argument. We find the record supports Petitioner's position that the Sakai and Kawagoe combination teaches this limitation of claim 1.

Claim 1 recites "an active region including a source and a drain, disposed on one surface of said surface layer." Ex. 1001, 4:16–17. Petitioner argues that Sakai's Figure 10D satisfies this element because it illustrates an N-channel MOS transistor with source/drain regions (7) in a doped shallow P-well (4) and a P-channel MOS transistor with source/drain regions (8) in a doped shallow N-well (5). Pet. 54–57 (citing Ex. 1006, 1:27–32, 1:57–2:5, 2:51–58, 3:53–4:14, 4:25–29, 5:24–32, 5:53–55, 5:64–6:4, 6:16–17, 6:52–58; Ex. 1003 ¶¶ 146–150). Petitioner contends the active region of a MOS transistor is its heavily doped source and drain regions because current flows through the channel region that connects the source and drain regions of a transistor when the transistor is active (when an appropriate voltage is applied to its gate). *Id.* at 57 (citing Ex. 1033; Ex. 1008B, 299–301, Figs. 5-1, 5-2, 6-4; Ex. 1003 ¶¶ 146–151). Petitioner contends that the active region of each of Sakai's transistors disposed on the top surface of a corresponding surface layer matches the active region in the '195 patent's Figure 5(b). *Id.* at 56 (citing Ex. 1003 ¶ 149). Patent Owner does not dispute this argument. We find the record supports Petitioner's position that the Sakai and Kawagoe combination teaches this limitation of claim 1.

Claim 1 recites "a single drift layer disposed between the other surface of said surface layer and said substrate." Ex. 1001, 4:18–19. Petitioner argues that Sakai's Figure 10D discloses a single drift layer (SDL) to the same extent that the '195 patent's Figure 5(b) does. Pet. 58 (citing Ex. 1003 ¶¶ 152–156; Ex. 1001, Fig. 5(b); Ex. 1006, Fig. 10D). Specifically, Petitioner asserts that Sakai's deep P-well region 2 with shallow P-well region 4 disposed in it is an example of the claimed drift layer, which is

disposed between the substrate and the other surface in the same way depicted in the '195 patent's Figure 5(b). *Id.* (citing Ex. 1006, 5:56–6:4, 1:57–67, 7:32–37, 6:24–28, 6:52–58; Ex. 1003 ¶¶ 152–156; Ex. 1030, 16). Petitioner asserts that each of the deep wells in the combination of Sakai with Kawagoe is a single drift layer because it has a graded dopant concentration that creates a unidirectional electric drift field that aids the movement of minority carriers in a single direction from the surface layer to the substrate for the reasons described in connection with the next limitation concerning the graded concentration of dopants. *Id.* at 59 (citing Ex. 1003 ¶¶ 156–164; Ex. 1030, 7; Ex. 1002, 253–54, 289–290). Patent Owner does not dispute Petitioner's argument that Sakai discloses this structure. We find the record supports Petitioner's position that the Sakai and Kawagoe combination teaches this limitation of claim 1 and we address the specifics of the drift layer itself in the context of the next claim limitation below.

Claim 1 further recites "said drift layer having a graded concentration of dopants extending between said surface layer and said substrate." Ex. 1001, 4:19–21. Petitioner contends that the combined teachings of Sakai and Kawagoe disclose or suggest a single drift layer having a downward-sloping dopant concentration, similar to what is shown in Kawagoe's Figure 17. Pet. 59–62. Petitioner contends that Kawagoe discloses, as illustrated in Figure 17, wells of a CMOS device "have their impurity concentrations ***gradually lowered*** in the depthwise direction" from the top surface of the silicon substrate to the bottom of the wells. *Id.* at 61 (citing Ex. 1007, 5:41–45, 8:46–52, 14:46–15:6, 15:26–40, 15:62–16:40, Fig. 17). Petitioner contends a person having ordinary skill in the art would have combined the teachings of Sakai and Kawagoe because (1) Sakai discloses improving the circuit density (packing density) of CMOS chips by disposing shallow wells

into deep wells of a "twin-well" to form high-packing-density memory devices including SRAM memory devices and (2) Kawagoe discusses CMOS static memory of MOS transistors, SRAM, and its teachings protect memories against soft errors. *Id.* at 62–65 (citing Ex. 1006, 1:55–2:5, 7:19–37, 7:24–37, 8:9–24, Figs. 2A, 10D, 15; Ex. 1007, 21:5–12, Fig. 27(B); Ex. 1008B, 583; Ex. 1003 ¶¶ 159–166).

Claim 1 further recites "said drift layer further having a first static unidirectional electric drift field to aid the movement of minority carriers from said surface layer to said substrate." Ex. 1001, 4:21–24.

Similar to its arguments regarding Payne discussed above, Petitioner contends that, in light of Patent Owner's representations to the Patent Office, Sakai-Kawagoe's graded dopant concentration, created through ion implementation techniques and downward-sloping over the entire SDL, creates a static unidirectional electric drift field that aids the movement of minority carriers from the surface layer to the substrate. Pet. 65–68 (citing Ex. 1007, Fig. 17; Ex. 1003 ¶¶ 173–176; Ex. 1002, 289–290, 318, 333). Petitioner also notes that Kawagoe teaches that its graded dopant profile causes carriers to move to the substrate. Pet. 58 (citing Ex. 1007, 16:2–11, 21:20–23).

Patent Owner disputes Petitioner's contention that Sakai and Kawagoe disclose or suggest the "aid the movement of minority carriers" claim limitation. PO Resp. 23–32. Patent Owner asserts that the Petition fails to show this limitation because the analysis is focused on the direction of the slope and not the magnitude or other possible forces. *Id.* at 31–32. However, for the reasons discussed, *supra*, a graded dopant concentration capable of this function is sufficient to meet the limitation. *See* Section III.C.4.

Patent Owner argues that Kawagoe does not disclose aiding the movement of carriers, but, rather, inhibiting carrier movement, because Kawagoe states that the concentration gradient "prevent[s] [electrons] from entering the p-well." PO Resp. 24–26 (quoting Ex. 1007, 16:7–11). Patent Owner also asserts that Kawagoe does not disclose carriers in the active region, but, rather, Kawagoe's electrons are produced below the well and are prevented from entering the p-well. PO Resp. 24–26 (citing Ex. 2064 ¶¶ 56–57). Patent Owner contends that "whatever Kawagoe is doing, it is in the *wrong* location" because Kawagoe "is preventing electrons produced by the α-ray (*i.e.,* the SEU electrons) from entering the p-well." PO Sur-reply 7–8 (citing Ex. 1007, 16:7–11; Ex. 2064 ¶ 57). Patent Owner argues that Kawagoe "only describes that this dopant gradient is able to keep SEU electrons out of the well[;] [i]t doesn't tell you what's happening in the well." *Id.* at 8 (citing Ex. 1054, 122:6–9).

In response, Petitioner contends that Kawagoe's transistor, like any transistor, will have carriers in the active region with an electric field pushing electrons down through the depth of Kawagoe's device, thus, combined with Sakai, Kawagoe's electrons are in the right place with an electric field pushing downward on those electrons in the claimed direction. Pet. Reply 10–11 (citing Ex. 1054, 112:8–113:16). Additionally, Petitioner contends that "because of the concentration gradient electrons are ***both*** 'attracted to the substrate body 2S' (i.e., movement aided) ***and*** 'prevented from entering the p-well' (i.e., movement inhibited)." Pet. Reply 14 (quoting Ex. 1007 (Kawagoe), 16:2–11). Petitioner presents testimony from both experts in support of this position that Kawagoe's graded concentration aids carriers in one direction and inhibits carrier movement in the opposite

direction. *Id.* at 13–14 (citing Ex. 1003 ¶¶ 152–188; Ex. 1054, 83:13–89:13, 92:2–97:8, 102:2–109:14, 109:25–116:3, 121:19–123:15).

The preponderance of the evidence demonstrates that Kawagoe has a graded dopant concentration in the active region as well as carriers. Dr. Glew's testimony confirms Petitioner's position that Kawagoe discloses a concentration gradient through the depth of Kawagoe's device along the sloping line depicted in Kawagoe's Figure 17 which "should result in a field" which "[p]ush[es] electrons downward." Ex. 1054, 112:8–20, 113:4–11; Ex. 1007, Fig. 17. The record supports Petitioner's position that Kawagoe's graded dopant concentration is downward-sloping over the entire SDL from the surface layer to the bottom of the SDL, thus, a static unidirectional electric drift field that aids the movement of minority carriers from the surface layer to the substrate. Pet. 66; Ex. 1007, Fig. 17; Ex. 1003 ¶¶ 173–177. In addition, Kawagoe states that carriers are "attracted to the substrate body . . . by that concentration gradient." Ex. 1007, 16:7–9. Thus, Petitioner demonstrates by a preponderance of the evidence that Kawagoe discloses a graded dopant concentration capable of the claimed function.

Lastly, claim 1 recites "at least one well region disposed in said single drift layer, said well region having a graded concentration of dopants and a second static unidirectional electric drift field to aid the movement of minority carriers from said surface layer to said substrate." Ex. 1001, 4:25–29. Petitioner contends that the combination of Sakai and Kawagoe discloses this limitation in view of Kawagoe's single drift layer with a downward-sloping graded dopant concentration discussed above with Sakai's nested well structures disposed in an SDL. Pet. 68–74 (citing Ex. 1007, 15:62–16:7, Fig. 17; Ex. 1006, 1:57–67, 5:56–6:4, 7:32–37, Fig. 10D; Ex. 1003 ¶¶ 179–184). Petitioner contends that the combination of

Sakai and Kawagoe meets this limitation in the same way that the '195 patent's Figure 5(b) illustrates this limitation. *Id.* at 69–70 (citing Ex. 1001, Fig. 5(b); Ex. 1030, 7). Petitioner also contends that, if the well region must be entirely contained within the SDL, Sakai also discloses that structure. *Id.* at 70 (citing Ex. 1006, Fig. 11E, 1:29–30, 2:60–61, 6:22–31, 6:52–58).

Petitioner contends that the graded-dopant profile, including the profile in the well region, is static because it is set once the device has been fabricated, thus, the profile and its resulting electric field does not change. *Id.* at 72. Petitioner's assertion that the second unidirectional electric drift field corresponding to Sakai's shallow well has a different magnitude from the first static unidirectional electric drift field corresponding to Sakai's deep well is supported by the different local slopes or gradients in the dopant profile illustrated by Kawagoe's Figure 17. Pet. 72–73; Ex. 1003 ¶¶ 185–188; Ex. 1022 ¶ 71; Ex. 1007, Fig. 17.

Patent Owner's position that the combination of Sakai and Kawagoe fails to disclose or suggest the "aid the movement of minority carriers" limitation is summarized and discussed above. PO Resp. 23–32;

PO Sur-reply 7–11. Based on this evidence, coupled with Patent Owner's statement during prosecution that a "graded dopant concentration <u>itself</u> creates a 'built in' electrical field that forces the movement of carriers in a particular direction," and that "this inherent 'built-in' unidirectional electric field is the additional parameter for ensuring that all minority carriers are being moved in one direction" (Ex. 1002, 289–290), we determine that the preponderance of the evidence supports Petitioner's position that Sakai and Kawagoe disclose or suggest the limitations of claim 1, notwithstanding Patent Owner's proffered objective indicia of nonobviousness discussed above, and that a person of ordinary skill in the

art would have had reason to combine the teachings of Sakai and Kawagoe for the stated benefit of improving Sakai's CMOS device with a downward-sloping dopant profile across Sakai's single drift layers from the top surface of the silicon substrate to the bottom of the deep well as taught by Kawagoe to reduce soft errors and would have had a reasonable expectation of successfully achieving the claimed invention. Ex. 1003 ¶¶ 136–188.

b. *Claim 2*

Claim 2 depends from claim 1 and further recites that "drift layer is a deeply-implanted layer." Ex. 1001, 4:31. Petitioner contends that Sakai renders obvious claim 2's additional limitation because Sakai teaches a nested well structure that matches the '195 patent's Figure 5(b) and explicitly discloses "deep" wells formed through "ion implantation techniques." Pet. 74–76 (citing Ex. 1006, Fig. 10D, 3:53–58, 5:56–61, 6:24–31; Ex. 1001, Fig. 5(b); Ex. 1003 ¶¶ 189–191).

Patent Owner does not present any additional challenges to Petitioner's arguments and evidence. *See generally* PO Resp.; PO Sur-reply.

Upon review of the arguments and supporting evidence, we determine that the preponderance of the evidence supports Petitioner's position that Sakai and Kawagoe disclose or suggest the limitations of claim 2, notwithstanding Patent Owner's proffered objective indicia of nonobviousness discussed above, that a person of ordinary skill in the art would have had reason to combine the teachings of Sakai and Kawagoe, and would have had a reasonable expectation of successfully achieving the claimed invention.

c. *Claim 3*

Claim 3 depends from claim 1 and further recites that "said drift layer is an epitaxial layer." Ex. 1001, 4:33. Petitioner argues that a person having ordinary skill in the art would have understood that Sakai's high-packing density CMOS device would require latchup protection and that a lightly doped epitaxial layer over a bulk substrate is effective to reduce latchup susceptibility. Pet. 76 (citing Ex. 1006, code (57), 1:55–56, 3:3–7, 7:28–37; Ex. 1007, 1:33–40, 15:7–17; Ex. 1003 ¶¶ 192–195). Petitioner argues that a person having ordinary skill in the art would have been motivated to substitute Kawagoe's epitaxial substrate for Sakai's general substrate to obtain the predictable results of Sakai's device with reduced latchup risk and lower cost. *Id.* at 76–77 (citing Ex. 1007, 15:7–17; Ex. 1003 ¶¶ 192–195). Petitioner argues that the combination of Sakai and Kawagoe would result in forming Sakai's deep n- and p-wells, each of which is an exemplary SDL, in the epitaxial portion of Kawagoe's epitaxial substrate, thus, Sakai-Kawgoe's SDL is an epitaxial layer. *Id.* at 77–78 (citing Ex. 1003 ¶¶ 196–198; Ex. 1006, 5:56–61; Ex. 1007, 8:36–39, 15:23–25).

Patent Owner does not present any additional challenges to Petitioner's arguments and evidence. *See generally* PO Resp.; PO Sur-reply.

Upon review of the arguments and supporting evidence, we determine that the preponderance of the evidence supports Petitioner's position that Sakai and Kawagoe disclose or suggest the limitations of claim 3, notwithstanding Patent Owner's proffered objective indicia of nonobviousness discussed above, that a person of ordinary skill in the art would have had reason to combine the teachings of Sakai and Kawagoe, and would have had a reasonable expectation of successfully achieving the claimed invention.

d. *Claims 4 and 5*

Claim 4 depends from claim 1 and further recites that "said graded concentration follows a linear gradient." Ex. 1001, 4:31. Claim 5 depends from claim 1 and further recites that "said graded concentration follows a quasi-linear gradient." Ex. 1001, 4:37. Petitioner contends that the lack of a description how to make linear/quasi-linear gradients in the '195 patent confirms that implementing them in CMOS devices was well-known. Pet. 78 (citing Ex. 1001, 2:40–42). Petitioner identifies segments in the downward sloping graded dopant concentration gradient of Sakai/Kawagoe that are linear or nearly-linear (quasilinear), with smaller segments becoming even more linear/quasi-linear. *Id.* at 78–80 (citing Ex. 1003 ¶¶ 199–201; Ex. 1007, Fig. 17; Ex. 1002, 437 (defining "quasi-linear" term as "substantially linear")).

Patent Owner does not present any additional challenges to Petitioner's arguments and evidence. *See generally* PO Resp.; PO Sur-reply.

Upon review of the arguments and supporting evidence, we determine that the preponderance of the evidence supports Petitioner's position that Sakai and Kawagoe disclose or suggest the limitations of claims 4 and 5, notwithstanding Patent Owner's proffered objective indicia of nonobviousness discussed above, that a person of ordinary skill in the art would have had reason to combine the teachings of Sakai and Kawagoe, and would have had a reasonable expectation of successfully achieving the claimed invention.

e. *Claim 6*

Claim 6 depends from claim 1 and further recites that "said graded concentration follows an exponential gradient." Ex. 1001, 4:39. Petitioner

contends that dopant profiles with exponential gradients were well-known and obvious and that the lack of any disclosure in the ’195 patent how to make exponential gradients confirms they were well-known for implementing in CMOS devices. Pet. 80 (citing Ex. 1001, 2:40–42; Ex. 1003 ¶¶ 202–206). Petitioner contends that it would have been obvious to modify the downward-sloping graded-dopant profile of Sakai-Kawagoe based on the general knowledge in the art to achieve a known exponential gradient and in view of Sakai’s disclosure to fabricate dopant profiles using the versatile ion-implantation process. *Id.* at 81–82 (citing Ex. 1003 ¶¶ 202–206; Ex. 1006, 5:56–6:4, 6:24–28. 6:52–58).

Patent Owner does not present any additional challenges to Petitioner’s arguments and evidence. *See generally* PO Resp.; PO Sur-reply.

Upon review of the arguments and supporting evidence, we determine that the preponderance of the evidence supports Petitioner’s position that Sakai and Kawagoe disclose or suggest the limitations of claim 6, notwithstanding Patent Owner’s proffered objective indicia of nonobviousness discussed above, that a person of ordinary skill in the art would have had reason to combine the teachings of Sakai and Kawagoe, and would have had a reasonable expectation of successfully achieving the claimed invention.

I. *Claim 2: Obviousness in view of Sakai, Kawagoe, and Wolf*

Claim 2 depends from claim 1 and further recites that “said drift layer is a deeply-implanted layer.” Ex. 1001, 4:31. Petitioner contends that the subject matter of claim 2 would have been obvious in view of the combined disclosures of Sakai, Kawagoe, and Wolf. Pet. 85–88. Patent Owner does not separately dispute or challenge Petitioner’s arguments or evidence

beyond the arguments discussed above with regard to Sakai and Kawagoe. *See* PO Resp. 23–33.

Petitioner contends that Sakai renders obvious claim 2's additional limitation because Sakai teaches a nested well structure that matches the '195 patent's Figure 5(b) and explicitly discloses "deep" wells formed through "ion implantation" techniques. Pet. 90 (citing Ex. 1003 ¶¶ 228–229; Ex. 1006, 3:53–59, 5:56–61, 6:24–31); *id.* at 74–76. Petitioner contends that a person having ordinary skill in the art would have been motivated to combine Wolf with Sakai-Kawagoe for the same reasons for combining Wolf with Payne, "to form Sakai's deep wells as deeply-implanted layers using high-energy implantation techniques to avoid damage to critical near-surface structures while establishing a desired dopant profile." *Id.* at 90–91 (citing Ex. 1008A, 403, 406–07, Table 10.2, 371–73, 423–24, 830; Ex. 1003 ¶¶ 228–229).

Because we find that Sakai and Kawagoe disclose or suggest the further limitations of claim 2 for the reasons provided above, we likewise determine that the preponderance of evidence supports Petitioner's position that Sakai, Kawagoe, and Wolf disclose or suggest the limitations of claim 2, notwithstanding Patent Owner's proffered objective indicia of nonobviousness discussed above, and that a person of ordinary skill in the art would have had reason to combine the teachings of Sakai, Kawagoe, and Wolf for the stated benefit taught by Wolf, and would have had a reasonable expectation of successfully achieving the claimed invention. Ex. 1003 ¶¶ 232–235.

IV. CONSTITUTIONALITY OF AIA

In less than two pages, Patent Owner argues "[t]he Board should dismiss this IPR, because the AIA violates the Supreme Court's non-delegation doctrine and the Constitution." PO Resp. 60–61. Patent Owner argues the Director improperly has authority to direct whether Patent Owner may receive legal process in the federal courts. *See id.* ("[T]he Director decides whether [Patent Owner] 'should receive *certain legal processes* (those accompanying Article III proceedings)' such as the protections of a jury trial and the clear and convincing evidence standard for patent validity."). Patent Owner also takes issue with the Director's "unreviewable discretion" to institute proceedings. *See id.* at 61 ("Since Congress provided no intelligible principle for the Director to apply in deciding whether to institute IPR proceedings, the statute governing these proceedings is unconstitutional and the Petition must be dismissed.").

Petitioner persuasively responds:

> The Supreme Court has already upheld the constitutionality of IPRs. *Oil States Energy Servs., LLC v. Greene's Energy Grp., LLC*, 584 U.S. 325, 344–45, (2018). The specific challenge[] raise[d] by [Patent Owner] is also logically flawed. According to [Patent Owner], IPRs are unconstitutional because "the Director decides whether [Patent Owner] 'should receive *certain legal processes* (those accompanying Article III proceedings)' such as the protections of a jury trial and the clear and convincing evidence standard for patent validity." POR, 60-61 (citing *Jarkesy v. Sec. & Exch. Comm'n*, 34 F.4th 446, 461 (5th Cir. 2022)). But these IPRs did not foreclose [Patent Owner] from litigating its patents in an Article III court. [Patent Owner] pushed for an Article III court (the District of Delaware) to evaluate the validity of its patents in parallel to these IPRs. *C.f.* EX1058 (PO Opp. to Mot. to Stay). The Article III court simply exercised its own discretion and stayed the case.

Pet. Reply 23.

We agree with Petitioner and adopt its foregoing analysis as our own. As to the challenged "unreviewable discretion" of the Director, we note that the Federal Circuit recently denied petitions for writ of mandamus challenging such discretion. *See, e.g.*, *In re Motorola Sols., Inc.*, 159 F.4th 30, 36 (Fed. Cir. 2025) ("Congress committed institution decisions to the Director's discretion" and "protected that exercise of discretion from judicial review by making such determinations 'final and nonappealable.'" (citing 35 U.S.C. § 314(d); *SAS Inst., Inc. v. Iancu*, 584 U.S. 357, 366 (2018))); *see also United States v. Arthrex, Inc.*, 594 U.S. 1, 8–9 (2021) ("Congress has committed the decision to institute inter partes review to the Director's unreviewable discretion.").

V. CONCLUSION[21]

For the reasons discussed above, we are persuaded that the Petition is not time-barred under 35 U.S.C. § 315(b) and that Petitioner demonstrates by a preponderance of the evidence that claims 1–6 are unpatentable. Our conclusions are summarized in the following table.

[21] Should Patent Owner wish to pursue amendment of the challenged claims in a reissue or reexamination proceeding subsequent to the issuance of this decision, we draw Patent Owner's attention to the April 2019 *Notice Regarding Options for Amendments by Patent Owner Through Reissue or Reexamination During a Pending AIA Trial Proceeding*. *See* 84 Fed. Reg. 16,654 (Apr. 22, 2019). If Patent Owner chooses to file a reissue application or a request for reexamination of the challenged patent, we remind Patent Owner of its continuing obligation to notify the Board of any such related matters in updated mandatory notices. *See* 37 C.F.R. § 42.8(a)(3), (b)(2).

Claim(s)	35 U.S.C. §	Reference(s)	Claim(s) Shown Unpatentable	Claim(s) Not Shown Unpatentable
1, 2, 4–6	103	Payne	1, 2, 4–6	
1–6	103	Sakai, Kawagoe	1–6	
2, 3	103	Payne, Wolf	2, 3	
3	103	Payne, Parrillo	3	
2	103	Sakai, Kawagoe, Wolf	2	
Overall Outcome			1–6	

VI. ORDER

For the foregoing reasons, it is:

ORDERED that Petitioner demonstrates by a preponderance of the evidence that claims 1–6 of the '195 patent are unpatentable;

FURTHER ORDERED that, in view of the orders to seal, this Decision is being filed "Board and Parties Only";

FURTHER ORDERED that after conferring with Petitioner, Patent Owner shall, within ten days of this Decision, submit to the Board via email to Trials@uspto.gov, a version of this Decision to be filed on the public record, with any redactions proposed by either party; and

FURTHER ORDERED that, because this is a Final Written Decision, parties to the proceeding seeking judicial review of the decision must comply with the notice and service requirements of 37 C.F.R. § 90.2.

For PETITIONER:

Roger Fulghum
Mark Speegle
Ellyar Y. Barazesh
Eliot Williams
Michael Hawes
BAKER BOTTS L.L.P.
roger.fulghum@bakerbotts.com
mark.speegle@bakerbotts.com
ellyar.barazesh@bakerbotts.com
eliot.williams@bakerbotts.com
Michael.hawes@backerbotts.com

Daniel Anderson
ERNST, BROWN & DRAPER, PLLC
daniel.anderson@andersonpatents.com

For PATENT OWNER:

Alan Whitehurst
Arvind Jairam
Archis "Neil" Ozarkar
MCKOOL SMITH, PC
awhitehurst@mckoolsmith.com
ajairam@mckoolsmith.com
nozarkar@McKoolSmith.com