UNITED STATES PATENT AND TRADEMARK OFFICE

_____

BEFORE THE PATENT TRIAL AND APPEAL BOARD

_____

NJOY, LLC, NJOY HOLDINGS, INC.,
Petitioners,

v.

JUUL LABS, INC.,
Patent Owner

_____

PETITION FOR *INTER PARTES* REVIEW
OF U.S. PATENT NOS. 11,134,722 AND 11,606,981

_____

DECLARATION OF JASON JANET

I. Introduction 1

II. Summary of Opinions 1

III. Qualifications and Compensation 3

IV. Relevant Legal Standards 5

A. Claim Construction 6

B. Invalidity 8

1. Anticipation 8

2. Obviousness 9

C. Person of Ordinary Skill in the Art 12

V. Background of the Technology 13

A. E-Cigarette 13

B. Cartomizer Design 15

C. Charging Contacts 18

D. Translucent Window 19

VI. Prior Art References 21

A. Pan (EX1024) 21

B. Levin (EX1003) 26

C. Thorens788 (EX1004) 31

D. Thorens231 (EX1002) 36

E. Liu783 (EX1010) 38

F. Liu438 (EX1013) 42

G. Tucker (EX1034) 44

NJOY Exhibit 1005.002

H. Zheng (EX1050) 47

VII. Claim Construction 50

A. "wicking element" ('722 Patent claims 1, 10, 15; '981 Patent claims 1, 9, 13) 51

B. "heating element" ('722 Patent claims 1, 10, 15; '981 Patent claims 1, 9, 13, 17) 51

C. "window" ('722 Patent claims 14, 17; '981 Patent claims 9, 17) 52

VIII. The '722 Patent 52

A. The Claims 52

B. Prosecution History 54

C. Ground 1: Pan in view of Levin 57

1. Motivation to Combine 57

a. USB Charging 57

b. Magnetic Coupling 65

2. Claim 1 70

a. [1.A] A vaporizer comprising: 70

b. [1.B] a battery portion comprising a battery housing segment and a cartomizer receiving segment, ... 71

c. [1.C] the cartomizer receiving segment defining a chamber having an insertion end distal from the battery housing segment and a base end proximate to the battery housing segment, ... 73

d. [1.D] the battery portion further comprising a plurality of charger electrical contacts to provide electrical charge to a battery housed in the battery housing segment, the charger electrical contacts disposed at a first end of the battery portion

NJOY Exhibit 1005.003

opposite the insertion end of the chamber of the cartomizer receiving segment, ... 74

e. [1.E] wherein an outer shell is commonly shared by the battery housing segment and the cartomizer receiving segment; and 76

f. [1.F] a cartomizer insertable into the chamber at the insertion end, the cartomizer comprising: 77

g. [1.G] a body including a structure configured to hold a vaporizable liquid; 78

h. [1.H] a wicking element provided within the body and at least partially in contact with the vaporizable liquid; and 79

i. [1.I] a heating element provided within the body in contact with the wicking element and operable to heat the vaporizable liquid, ... 81

j. [1.J] wherein the wicking element is configured to deliver the vaporizable liquid to the heating element, and 82

k. [1.K] wherein the entire heating element is disposed between the insertion end of the chamber and the base end of the chamber when the cartomizer is inserted into the chamber such that the outer shell protects the heating element. 82

3. Claim 5: The vaporizer of claim 1, wherein the plurality of charger electrical contacts are arranged linearly at the first end of the battery portion. 83

4. Claim 7: The vaporizer of claim 1, wherein the cartomizer further comprises a mouthpiece opposite an end of the cartomizer configured for insertion into the chamber. 84

NJOY Exhibit 1005.004

5. Claim 9: The vaporizer of claim 1, wherein the cartomizer further comprises electrical circuitry connected with the heating element. 86

6. Claim 10 86

a. [10.A] A vaporizer comprising: 86

b. [10.B] a battery portion comprising: a battery housing segment; 86

c. [10.C] a cartomizer receiving segment defining a cartomizer chamber having an insertion end distal from the battery housing segment, the cartomizer chamber further having a base end proximate to the battery housing segment, ... 87

d. [10.D] wherein an outer shell is commonly shared by the battery housing segment and the cartomizer receiving segment; 87

e. [10.E] a plurality of charger electrical contacts disposed at a first end of the battery portion opposite the insertion end of the cartomizer chamber, the insertion end of the cartomizer chamber being at a second end of the battery portion; and 87

f. [10.F] at least one magnet of the battery portion, the at least one magnet of the battery portion in or proximate to the cartomizer chamber; and 87

g. [10.G] a cartomizer insertable into the cartomizer chamber at the insertion end, the cartomizer comprising: 90

h. [10.H] a body including a structure configured to hold a vaporizable liquid; 90

i. [10.I] a wicking element provided within the body and at least partially in contact with the vaporizable liquid; 90

NJOY Exhibit 1005.005

j. [10.J] a heating element provided within the body in contact with the wicking element and operable to heat the vaporizable liquid,.....90

k. [10.K] wherein the wicking element is configured to deliver the vaporizable liquid to the heating element, and.....90

l. [10.L] wherein the entire heating element is disposed between the insertion end of the cartomizer chamber and the base end of the cartomizer chamber when the cartomizer is inserted into the cartomizer chamber such that the outer shell protects the heating element; and 90

m. [10.M] a metal element disposed near a base end of the cartomizer for coupling with the at least one magnet of the battery portion.....91

7. Claim 11: The vaporizer of claim 10, wherein the battery portion further comprises one or more battery electrical contacts in or proximate the cartomizer chamber of the cartomizer receiving segment. 92

8. Claim 12: The vaporizer of claim 10, wherein the cartomizer further comprises one or more cartomizer electrical contacts for connecting with one or more battery electrical contacts in or proximate the cartomizer chamber. 93

9. Claim 13: The vaporizer of claim 10, wherein the plurality of charger electrical contacts are arranged linearly at the first end of the battery portion. 94

10. Claim 15 94

a. [15.A] A vaporizer comprising:.....94

b. [15.B] a battery portion comprising: 94

c. [15.C] a plurality of charger electrical contacts disposed at a first end of the battery portion; 95

NJOY Exhibit 1005.006

d. [15.D] a battery housing segment for housing a battery between the first end of the battery portion and a second end of the battery portion;.....95

e. [15.E] a cartomizer receiving segment defining a chamber having an insertion end at the second end of the battery portion and distal from the battery housing segment, the chamber further having a base end proximate to the battery housing segment,.....95

f. [15.F] wherein an outer shell is commonly shared by the battery housing segment and the cartomizer receiving segment; and 95

g. [15.G] one or more battery electrical contacts in or proximate the chamber of the cartomizer receiving segment; and 95

h. [15.H] a cartomizer insertable into the insertion end of the chamber, the cartomizer comprising: 95

i. [15.I] a body including a structure configured to hold a vaporizable liquid; 95

j. [15.J] a wicking element provided within the body and at least partially in contact with the vaporizable liquid; 96

k. [15.K] a heating element provided within the body in contact with the wicking element and operable to heat the vaporizable liquid,.....96

l. [15.L] wherein the wicking element is configured to deliver the vaporizable liquid to the heating element, and.....96

m. [15.M] wherein the entire heating element is disposed between the insertion end of the chamber and the base end of the chamber when the cartomizer is inserted into the chamber such that the outer shell protects the heating element; and 96

NJOY Exhibit 1005.007

n. [15.N] one or more cartomizer electrical contacts for connecting with the one or more battery electrical contacts in or proximate the chamber. 96

11. Claim 16: The vaporizer of claim 15, wherein the plurality of charger electrical contacts are arranged linearly at the first end of the battery portion. 96

12. Claim 18: The vaporizer of claim 1, the battery portion further comprising at least one magnet in or proximate to the chamber of the cartomizer receiving segment. 97

13. Claim 19: The vaporizer of claim 18, the cartomizer further comprising a metal element disposed near a base end of the cartomizer for coupling with the at least one magnet of the battery portion. 97

14. Claim 20: The vaporizer of claim 15, the battery portion further comprising at least one magnet in or proximate to the chamber of the cartomizer receiving segment. 97

15. Claim 21: The vaporizer of claim 20, the cartomizer further comprising a metal element disposed near a base end of the cartomizer for coupling with the at least one magnet of the battery portion. 97

D. Ground 2: Pan and Levin and further in view of Tucker and the knowledge of a POSA 97

1. Motivation to Combine 98

2. Claims 14 and 17: The vaporizer of claim [10/15], further comprising a window on or proximate to the shell, the window permitting viewing of the cartomizer when the cartomizer is inserted into the cartomizer chamber. 105

E. Ground 3: Thorens788 in view of Thorens559 and Levin 106

1. Motivation to Combine 106

a. USB Charging 106

b. Magnetic Coupling 110

NJOY Exhibit 1005.008

c. Mouthpiece Housing.....112

2. Claim 1 115

a. [1.A] A vaporizer comprising:.....115

b. [1.B] a battery portion comprising a battery housing segment and a cartomizer receiving segment, ...116

c. [1.C] the cartomizer receiving segment defining a chamber having an insertion end distal from the battery housing segment and a base end proximate to the battery housing segment, ...119

d. [1.D] the battery portion further comprising a plurality of charger electrical contacts to provide electrical charge to a battery housed in the battery housing segment, the charger electrical contacts disposed at a first end of the battery portion opposite the insertion end of the chamber of the cartomizer receiving segment, ...120

e. [1.E] wherein an outer shell is commonly shared by the battery housing segment and the cartomizer receiving segment; and 121

f. [1.F] a cartomizer insertable into the chamber at the insertion end, the cartomizer comprising: 122

g. [1.G] a body including a structure configured to hold a vaporizable liquid; 123

h. [1.H] a wicking element provided within the body and at least partially in contact with the vaporizable liquid; and 126

i. [1.I] a heating element provided within the body in contact with the wicking element and operable to heat the vaporizable liquid,.....128

NJOY Exhibit 1005.009

j. [1.J] wherein the wicking element is configured to deliver the vaporizable liquid to the heating element, and 131

k. [1.K] wherein the entire heating element is disposed between the insertion end of the chamber and the base end of the chamber when the cartomizer is inserted into the chamber such that the outer shell protects the heating element. 132

3. Claim 5: The vaporizer of claim 1, wherein the plurality of charger electrical contacts are arranged linearly at the first end of the battery portion. 133

4. Claim 7: The vaporizer of claim 1, wherein the cartomizer further comprises a mouthpiece opposite an end of the cartomizer configured for insertion into the chamber. 134

5. Claim 9: The vaporizer of claim 1, wherein the cartomizer further comprises electrical circuitry connected with the heating element. 135

6. Claim 10 137

a. [10.A] A vaporizer comprising: 137

b. [10.B] a battery portion comprising: a battery housing segment; 137

c. [10.C] a cartomizer receiving segment defining a cartomizer chamber having an insertion end distal from the battery housing segment, [10.E] the cartomizer chamber further having a base end proximate to the battery housing segment, ... 137

d. [10.D] wherein an outer shell is commonly shared by the battery housing segment and the cartomizer receiving segment; 137

e. [10.E] a plurality of charger electrical contacts disposed at a first end of the battery portion

NJOY Exhibit 1005.010

opposite the insertion end of the cartomizer chamber, the insertion end of the cartomizer chamber being at a second end of the battery portion; and 137

f. [10.F] at least one magnet of the battery portion, the at least one magnet of the battery portion in or proximate to the cartomizer chamber; and 138

g. [10.G] a cartomizer insertable into the cartomizer chamber at the insertion end, the cartomizer comprising: 138

h. [10.H] a body including a structure configured to hold a vaporizable liquid; 138

i. [10.I] a wicking element provided within the body and at least partially in contact with the vaporizable liquid; 139

j. [10.J] a heating element provided within the body in contact with the wicking element and operable to heat the vaporizable liquid,..... 139

k. [10.K] wherein the wicking element is configured to deliver the vaporizable liquid to the heating element, and 139

l. [10.L] wherein the entire heating element is disposed between the insertion end of the cartomizer chamber and the base end of the cartomizer chamber when the cartomizer is inserted into the cartomizer chamber such that the outer shell protects the heating element; and 139

m. [10.M] a metal element disposed near a base end of the cartomizer for coupling with the at least one magnet of the battery portion..... 139

7. Claim 11: The vaporizer of claim 10, wherein the battery portion further comprises one or more battery electrical

NJOY Exhibit 1005.011

contacts in or proximate the cartomizer chamber of the cartomizer receiving segment. 140

8. Claim 12: The vaporizer of claim 10, wherein the cartomizer further comprises one or more cartomizer electrical contacts for connecting with one or more battery electrical contacts in or proximate the cartomizer chamber. 142

9. Claim 13: The vaporizer of claim 10, wherein the plurality of charger electrical contacts are arranged linearly at the first end of the battery portion. 144

10. Claim 15 144

a. [15.A] A vaporizer comprising:.....144

b. [15.B] a battery portion comprising: 144

c. [15.C] a plurality of charger electrical contacts disposed at a first end of the battery portion; 145

d. [15.D] a battery housing segment for housing a battery between the first end of the battery portion and a second end of the battery portion;.....145

e. [15.E] a cartomizer receiving segment defining a chamber having an insertion end at the second end of the battery portion and distal from the battery housing segment, the chamber further having a base end proximate to the battery housing segment,....145

f. [15.F] wherein an outer shell is commonly shared by the battery housing segment and the cartomizer receiving segment; and 145

g. [15.G] one or more battery electrical contacts in or proximate the chamber of the cartomizer receiving segment; and 145

h. [15.H] a cartomizer insertable into the insertion end of the chamber, the cartomizer comprising: 145

NJOY Exhibit 1005.012

i. [15.I] a body including a structure configured to hold a vaporizable liquid; 145

j. [15.J] a wicking element provided within the body and at least partially in contact with the vaporizable liquid; 146

k. [15.K] a heating element provided within the body in contact with the wicking element and operable to heat the vaporizable liquid,.....146

l. [15.L] wherein the wicking element is configured to deliver the vaporizable liquid to the heating element, and.....146

m. [15.M] wherein the entire heating element is disposed between the insertion end of the chamber and the base end of the chamber when the cartomizer is inserted into the chamber such that the outer shell protects the heating element; and 146

n. [15.N] one or more cartomizer electrical contacts for connecting with the one or more battery electrical contacts in or proximate the chamber. 146

11. Claim 16: The vaporizer of claim 15, wherein the plurality of charger electrical contacts are arranged linearly at the first end of the battery portion. 146

12. Claim 18: The vaporizer of claim 1, the battery portion further comprising at least one magnet in or proximate to the chamber of the cartomizer receiving segment. 147

13. Claim 19: The vaporizer of claim 18, the cartomizer further comprising a metal element disposed near a base end of the cartomizer for coupling with the at least one magnet of the battery portion. 147

14. Claim 20: The vaporizer of claim 15, the battery portion further comprising at least one magnet in or proximate to the chamber of the cartomizer receiving segment. 147

NJOY Exhibit 1005.013

15. Claim 21: The vaporizer of claim 20, the cartomizer further comprising a metal element disposed near a base end of the cartomizer for coupling with the at least one magnet of the battery portion. 147

F. Ground 4: Thorens788 in view of Thorens231, Levin, and Tucker 147

1. Motivation to Combine 148

2. Claim 14: The vaporizer of claim 10, further comprising a window on or proximate to the shell, the window permitting viewing of the cartomizer when the cartomizer is inserted into the cartomizer chamber. 153

3. Claim 17: The vaporizer of claim 15, further comprising a window on or proximate to the shell, the window permitting viewing of the cartomizer when the cartomizer is inserted into the chamber. 154

IX. The ’981 Patent 154

A. The Claims 154

B. Prosecution History 157

C. Ground 1: Liu783 in view of Liu438 and further in view of the knowledge of a POSA. 158

1. Motivation to Combine 158

a. Transparent Cartridge 158

b. Battery Housing Integrated With Connection 161

2. Claim 1 164

a. [1.A] A vaporizer device comprising: 164

b. [1.B] a battery portion having an outer shell and a chamber defined by the outer shell; and 164

NJOY Exhibit 1005.014

c. [1.C] a cartomizer having a mouthpiece end and an insertion end disposed opposite the mouthpiece end, the cartomizer comprising: 167

d. [1.D] a cartomizer body having a volume defined therein, the volume configured to hold a fluid vaporizable substance, ...169

e. [1.E] wherein at least a portion of the cartomizer body comprises a translucent material configured to allow viewing of the fluid vaporizable substance, ...170

f. [1.F] wherein the cartomizer body is configured for insertion into the chamber such that at least part of the volume is positioned in the chamber when the cartomizer body is inserted into the chamber; 171

g. [1.G] a heating element and a wicking element within the cartomizer body; 172

h. [1.H] an inhalation tube in fluid communication with the heating element and the wicking element; 176

i. [1.I] a mouthpiece at or proximate to the mouthpiece end, the mouthpiece in fluid communication with the inhalation tube; and 178

j. [1.J] a plurality of cartomizer electrical contacts on an exterior of the insertion end, ...179

k. [1.K] wherein the plurality of cartomizer electrical contacts is positioned to contact a plurality of battery electrical contacts at a base end of the chamber when the cartomizer body is inserted into the chamber. 182

3. Claim 5: The cartomizer of claim 1, wherein the cartomizer further comprises a structure that secures the cartomizer in the chamber, and wherein the structure comprises a cartomizer metallic surface configured to be

NJOY Exhibit 1005.015

attracted to at least one magnet in or proximate to the chamber. 184

4. Claim 13 185

a. [13.A] A vaporizer device comprising: 185

b. [13.B] a battery portion having an outer shell and a chamber defined by the outer shell; and 186

c. [13.C] a cartomizer having a mouthpiece end and an insertion end disposed opposite the mouthpiece end, the cartomizer comprising: 186

d. [13.D] a cartomizer body having a volume defined therein, the volume configured to hold a vaporizable substance, ... 186

e. [13.E] wherein the vaporizable substance is in a fluid state, ... 186

f. [13.F] wherein the cartomizer body is configured for insertion into the chamber such that at least part of the volume is positioned in the chamber when the cartomizer body is inserted into the chamber; 186

g. [13.G] a heating element within the cartomizer body; 186

h. [13.H] cartomizer electrical contacts operable to direct current to the heating element, wherein the cartomizer electrical contacts are on an exterior of the cartomizer body; and 186

i. [13.I] a wicking element inside the cartomizer body, the wicking element configured to absorb the vaporizable substance; 187

j. [13.J] an inhalation tube in fluid communication with the heating element and the wicking element; and 187

NJOY Exhibit 1005.016

k. [13.K] a mouthpiece at or proximate to the mouthpiece end, the mouthpiece in fluid communication with the inhalation tube. 187

5. Claim 14: The cartomizer of claim 13, wherein at least a portion of the cartomizer body comprises a translucent material configured to allow viewing of the fluid vaporizable substance. 188

6. Claim 15: The cartomizer of claim 13, wherein the vaporizable substance comprises a liquid comprising nicotine. 188

7. Claim 16: The cartomizer of claim 13, wherein cartomizer electrical contacts are positioned to contact a plurality of battery electrical contacts at a base end of the chamber when the cartomizer body is inserted into the chamber. 189

D. Ground 2: Liu783 and Liu438 further in view of Tucker and the knowledge of a POSA 189

1. Motivation to Combine 189

a. Window on the Outer Shell 189

b. Coplanar Electrical Contacts 193

2. Claim 9 200

a. [9.A] A vaporizer device comprising: 200

b. [9.B] a cartomizer comprising, ...200

c. [9.C] a cartomizer body configured to hold a fluid vaporizable substance, ...201

d. [9.D] wherein at least a portion of the cartomizer body comprises a translucent material configured to allow viewing of the fluid vaporizable substance; 201

NJOY Exhibit 1005.017

e. [9.E] a heating element and a wicking element within the cartomizer body; and 201

f. [9.F] a plurality of cartomizer electrical contacts on an exterior of the insertion end; and 201

g. [9.G] a battery portion, the battery portion having a first end and a second end and comprising:.....201

h. [9.H] a battery housing segment proximate the first end of the battery portion; and.....202

i. [9.I] a cartomizer receiving segment proximate the second end of the battery portion, ...203

j. [9.J] the cartomizer receiving segment comprising a chamber defined by an outer shell of the battery portion,.....204

k. [9.K] wherein a window is provided in the outer shell, and wherein the translucent portion of the cartomizer body aligns with the window when the cartomizer body is inserted into the chamber.....205

3. Claim 10: The vaporizer device of claim 9, wherein outer shell is commonly shared by the battery housing segment and the cartomizer receiving segment. 206

4. Claim 11: The vaporizer device of claim 9, further comprising a rechargeable battery in the battery housing segment. 207

5. Claim 17 207

a. [17.A] A vaporizer device comprising: 207

b. [17.B] a cartomizer comprising: 207

c. [17.C] a cartomizer body configured to hold a vaporizable substance, wherein the vaporizable substance is in a fluid state, ...208

NJOY Exhibit 1005.018

d. [17.D] wherein the cartomizer body is configured for insertion into a chamber defined by an outer shell of a battery portion of a vaporizer device, ...208

e. [17.E] a heating element within the cartomizer body, ...208

f. [17.F] cartomizer electrical contacts operable to direct current to the heating element, and 208

g. [17.G] a mouthpiece at or proximate to the mouthpiece end, the mouthpiece in fluid communication with the inhalation tube; and 208

h. [17.I] a chamber of a cartomizer receiving segment, the chamber configured for receiving the cartomizer body, the cartomizer electrical contacts, and the heating element through an opening at a distal insertion end of the battery portion,.....208

i. [17.J] a battery segment disposed between the cartomizer receiving segment and a battery end of the battery portion opposite from the distal insertion end of the battery portion, the battery segment comprising a battery, ...209

j. [17.K] battery electrical contacts for completing a circuit with the cartomizer electrical contacts when the cartomizer electrical contacts are received into the chamber, the battery electrical contacts being coplanar, and.....210

k. [17.L] an outer shell forming at least part of the chamber, wherein a window is formed in the outer shell to permit viewing of the cartomizer body when the cartomizer body is received into the chamber.....212

6. Claim 18 213

a. [18.A] The vaporizer device of claim 9, wherein the cartomizer has a mouthpiece end and an

NJOY Exhibit 1005.019

insertion end disposed opposite the mouthpiece end, the cartomizer further comprises, ...213

b. [18.B] an inhalation tube in fluid communication with the heating element and the wicking element; and.....213

c. [18.C] a mouthpiece at or proximate to the mouthpiece end, the mouthpiece in fluid communication with the inhalation tube; 213

d. [18.D] wherein the plurality of cartomizer electrical contacts is positioned to contact a plurality of battery electrical contacts at a base end of the chamber when the cartomizer body is inserted into the chamber.....213

E. Ground 3: Liu783 and Liu438 further in view of Zheng 213

1. Motivation to Combine 213

a. Compressible Electrical Contacts 213

2. Claim 8: The cartomizer of claim 1, wherein the plurality of cartomizer electrical contacts is further configured to at least partially compress the plurality of battery electrical contacts when the cartomizer body is inserted into the chamber.....218

F. Ground 4: Thorens788 in view of Thorens231 218

1. Motivation to Combine 218

a. Mouthpiece Housing.....218

2. Claim 1 221

a. [1.A] A vaporizer device comprising: 221

b. [1.B] a battery portion having an outer shell and a chamber defined by the outer shell; and.....222

NJOY Exhibit 1005.020

c. [1.C] a cartomizer having a mouthpiece end and an insertion end disposed opposite the mouthpiece end, the cartomizer comprising: 224

d. [1.D] a cartomizer body having a volume defined therein, the volume configured to hold a fluid vaporizable substance, ...227

e. [1.E] wherein at least a portion of the cartomizer body comprises a translucent material configured to allow viewing of the fluid vaporizable substance, ...230

f. [1.F] wherein the cartomizer body is configured for insertion into the chamber such that at least part of the volume is positioned in the chamber when the cartomizer body is inserted into the chamber; 232

g. [1.G] a heating element and a wicking element within the cartomizer body; 233

h. [1.H] an inhalation tube in fluid communication with the heating element and the wicking element; 236

i. [1.I] a mouthpiece at or proximate to the mouthpiece end, the mouthpiece in fluid communication with the inhalation tube; and 238

j. [1.J] a plurality of cartomizer electrical contacts on an exterior of the insertion end, ...240

k. [1.K] wherein the plurality of cartomizer electrical contacts is positioned to contact a plurality of battery electrical contacts at a base end of the chamber when the cartomizer body is inserted into the chamber. 242

3. Claim 13 244

a. [13.A] A vaporizer device comprising: 244

NJOY Exhibit 1005.021

b. [13.B] a battery portion having an outer shell and a chamber defined by the outer shell; and.....244

c. [13.C] a cartomizer having a mouthpiece end and an insertion end disposed opposite the mouthpiece end, the cartomizer comprising: 244

d. [13.D] a cartomizer body having a volume defined therein, the volume configured to hold a vaporizable substance, ...245

e. [13.E] wherein the vaporizable substance is in a fluid state, ...245

f. [13.F] wherein the cartomizer body is configured for insertion into the chamber such that at least part of the volume is positioned in the chamber when the cartomizer body is inserted into the chamber; 245

g. [13.G] a heating element within the cartomizer body; 245

h. [13.H] cartomizer electrical contacts operable to direct current to the heating element, wherein the cartomizer electrical contacts are on an exterior of the cartomizer body; and 245

i. [13.I] a wicking element inside the cartomizer body, the wicking element configured to absorb the vaporizable substance; 247

j. [13.J] an inhalation tube in fluid communication with the heating element and the wicking element; and.....247

k. [13.K] a mouthpiece at or proximate to the mouthpiece end, the mouthpiece in fluid communication with the inhalation tube. 247

4. Claim 14: [14.A] The cartomizer of claim 13, wherein at least a portion of the cartomizer body comprises a

NJOY Exhibit 1005.022

translucent material configured to allow viewing of the fluid vaporizable substance. 247

5. Claim 15: [15.A] The cartomizer of claim 13, wherein the vaporizable substance comprises a liquid comprising nicotine. 248

6. Claim 16: The cartomizer of claim 13, wherein cartomizer electrical contacts are positioned to contact a plurality of battery electrical contacts at a base end of the chamber when the cartomizer body is inserted into the chamber. 248

G. Ground 5: Thorens788 and Thorens231 further in view of Levin 248

1. Motivation to Combine 248

a. Magnetic Coupling 248

2. Claim 5: The cartomizer of claim 1, wherein the cartomizer further comprises a structure that secures the cartomizer in the chamber, and wherein the structure comprises a cartomizer metallic surface configured to be attracted to at least one magnet in or proximate to the chamber. 254

H. Ground 6: Thorens788 and Thorens231 further in view of Tucker 254

1. Motivation to Combine 254

a. Transparent Outer Shell 254

2. Claim 9 256

a. [9.A] A vaporizer device comprising: 256

b. [9.B] a cartomizer comprising, ...256

c. [9.C] a cartomizer body configured to hold a fluid vaporizable substance, ...256

NJOY Exhibit 1005.023

d. [9.D] wherein at least a portion of the cartomizer body comprises a translucent material configured to allow viewing of the fluid vaporizable substance;.....256

e. [9.E] a heating element and a wicking element within the cartomizer body; and.....257

f. [9.F] a plurality of cartomizer electrical contacts on an exterior of the insertion end; and.....257

g. [9.G] a battery portion, the battery portion having a first end and a second end and comprising:.....257

h. [9.H] a battery housing segment proximate the first end of the battery portion; and.....258

i. [9.I] a cartomizer receiving segment proximate the second end of the battery portion, ...259

j. [9.J] the cartomizer receiving segment comprising a chamber defined by an outer shell of the battery portion,.....261

k. [9.K] wherein a window is provided in the outer shell, and wherein the translucent portion of the cartomizer body aligns with the window when the cartomizer body is inserted into the chamber.....261

3. Claim 10: The vaporizer device of claim 9, wherein outer shell is commonly shared by the battery housing segment and the cartomizer receiving segment. 261

4. Claim 11: The vaporizer device of claim 9, further comprising a rechargeable battery in the battery housing segment. 263

5. Claim 17.....263

a. [17.A] A vaporizer device comprising:.....263

b. [17.B] a cartomizer comprising:.....263

NJOY Exhibit 1005.024

c. [17.C] a cartomizer body configured to hold a vaporizable substance, wherein the vaporizable substance is in a fluid state, ...264

d. [17.D] wherein the cartomizer body is configured for insertion into a chamber defined by an outer shell of a battery portion of a vaporizer device, ...264

e. [17.E] a heating element within the cartomizer body, ...264

f. [17.F] cartomizer electrical contacts operable to direct current to the heating element, and 264

g. [17.G] a mouthpiece at or proximate to the mouthpiece end, the mouthpiece in fluid communication with the inhalation tube; and 264

h. [17.H] a battery portion, the battery portion having a first end and a second end, the battery portion comprising: 264

i. [17.I] a chamber of a cartomizer receiving segment, the chamber configured for receiving the cartomizer body, the cartomizer electrical contacts, and the heating element through an opening at a distal insertion end of the battery portion, ...264

j. [17.J] a battery segment disposed between the cartomizer receiving segment and a battery end of the battery portion opposite from the distal insertion end of the battery portion, the battery segment comprising a battery, ...265

k. [17.K] battery electrical contacts for completing a circuit with the cartomizer electrical contacts when the cartomizer electrical contacts are received into the chamber, the battery electrical contacts being coplanar, and.....266

l. [17.L] an outer shell forming at least part of the chamber, wherein a window is formed in the outer

NJOY Exhibit 1005.025

shell to permit viewing of the cartomizer body when the cartomizer body is received into the chamber. 268

6. Claim 18 269

a. [18.A] The vaporizer device of claim 9, wherein the cartomizer has a mouthpiece end and an insertion end disposed opposite the mouthpiece end, the cartomizer further comprises, ... 269

b. [18.B] an inhalation tube in fluid communication with the heating element and the wicking element; and 269

c. [18.C] a mouthpiece at or proximate to the mouthpiece end, the mouthpiece in fluid communication with the inhalation tube; 269

I. Ground 7: Thorens788 and Thorens231 further in view of Zheng 269

1. Motivation to Combine 269

a. Compressible Electrical Contacts 269

2. Claim 8: The cartomizer of claim 1, wherein the plurality of cartomizer electrical contacts is further configured to at least partially compress the plurality of battery electrical contacts when the cartomizer body is inserted into the chamber. 272

X. Secondary Considerations 273

XI. Declaration 274

NJOY Exhibit 1005.026

I. Introduction

1. I have been retained by NJOY, LLC, and NJOY Holdings, Inc. (collectively, "Petitioners" or "NJOY") through their counsel Weil, Gotshal & Manges LLP as an independent expert witness in the above-captioned *inter partes* reviews ("IPRs"), in which NJOY has requested that the U.S. Patent and Trademark Office cancel as unpatentable all claims of U.S. Patent Nos. 11,134,722 ("the '722 patent") and 11,606,981 ("the '981 patent") (together, "the Verleur Patents").

2. This declaration sets forth my analyses and opinions based on my knowledge, experience, and the materials I have considered. As I explain below, it is my opinion that all claims of the '722 patent and '981 patent are directed to subject matter that was routine, conventional, and well known in the art before the patents' priority dates. As would be readily appreciated by one of skill in the art, the claims of the '722 patent and the '981 patent are anticipated and/or rendered obvious by the prior art references discussed herein.

3. I have reviewed the documents referenced in this declaration. I understand they have been submitted as exhibits in conjunction with NJOY's Petitions for IPR.

II. Summary of Opinions

4. Based on my knowledge, experience, and the materials that I have reviewed, it is my opinion that claims 1, 5, 7, and 9-21 of the '722 patent and claims

NJOY Exhibit 1005.027

1, 5, 8-11, and 13-18 of the ’981 patent are anticipated and/or obvious. Specifically:

(i) <u>’722 Patent</u>

Ground 1	Claims 1, 5, 7, 9-13, 15-16, 18-21 of the ’722 Patent are unpatentable under 35 U.S.C. § 103 on the ground that they are rendered obvious by the U.S. Pat. No. 8,205,622 (“Pan”) in view of U.S. Patent No. 9,427,022 (“Levin”).
Ground 2	Claims 14 and 17 of the ’722 Patent are unpatentable under 35 U.S.C. § 103 on the ground that they are rendered obvious by Pan and Levin further in view of U.S. Pat. Pub. No. 2013/0192623 (“Tucker”) and the knowledge of a POSA.
Ground 3	Claims 1, 5, 7, 9-13, 15-16, 18-21 of the ’722 Patent are unpatentable under 35 U.S.C. § 103 on the ground that they are rendered obvious by WO2011/160788 (“Thorens788”) in view of U.S. Patent No. 8,794,231 (“Thorens231”) and further in view of Levin.
Ground 4	Claims 14 and 17 of the ’722 Patent are unpatentable under 35 U.S.C. § 103 on the ground that they are rendered obvious by Thorens788, Thorens231, and Levin, and further in view of Tucker.

(ii) <u>’981 Patent</u>

Ground 1	Claims 1, 5, and 13-16 of the ’981 Patent are unpatentable under 35 U.S.C. § 103 as rendered obvious by U.S. Pat. Pub. No. 2014/0150783A1 (“Liu783”) and U.S. Pat. App. Pub. No. 2013/0319438 (“Liu438”) in combination, in view of the knowledge of a POSA.

NJOY Exhibit 1005.028

Ground 2	Claims 9-11 and 17-18 of the ’981 Patent are unpatentable under 35 U.S.C. § 103 as rendered obvious by Liu783 and Liu438 further in view of U.S. Pat. Pub. No. 2013/0192623 (“Tucker”) and the knowledge of a POSA.
Ground 3	Claim 8 of the ’981 Patent is unpatentable under 35 U.S.C. § 103 as rendered obvious by Liu783 and Lin336 further in view of U.S. Patent No. 9,060,548 (“Zheng”).
Ground 4	Claims 1 and 13-16 of the ’981 Patent are unpatentable under 35 U.S.C. § 103 as rendered obvious by Thorens788 in view of Thorens231
Ground 5	Claim 5 of the ’981 Patent is unpatentable under 35 U.S.C. § 103 as rendered obvious by Thorens788 and Thorens231 further in view of Levin
Ground 6	Claims 9-11 and 17-18 of the ’981 Patent are unpatentable under 35 U.S.C. § 103 as rendered obvious by Thorens788 and Thorens231 further in view of Tucker.
Ground 7	Claim 8 of the ’981 Patent is unpatentable under 35 U.S.C. § 103 as rendered obvious by Thorens788 and Thorens231 further in view of Zheng.

III. Qualifications and Compensation

5. I have a Ph.D. in Electrical & Computer Engineering from North Carolina State University (or “NCSU”), which I earned in 1998. Prior to that I received a M.S. in Integrated Manufacturing Systems Engineering from North

NJOY Exhibit 1005.029

Carolina State University in 1994 and a B.S. in Mechanical Engineering from the University of Virginia in 1990.

6. I have more than 25 years of experience in product design related to e-vapor devices. Between 1999 and 2011, while affiliated with RxMedic and Parata, I developed automated systems that stored, dispensed and retrieved medicaments, including, but not limited to 1) the functional fluid management of compressed and vacuum air/gases over hundreds of medication manipulation modules within a robot; 2) Components that include (relative and absolute) pressure sensor(s), (passive and actuated) valves, filtration systems, fluid composition quality monitoring, etc.; 3) Applications that include fluidization and singulation of oral solid medicaments, ejection means, air purification, etc.; and, 4) In-line compression-driven filtration of lubricants to prevent contamination of oral solids dispensed a la venturi jets. Between 1998 and 2010, while affiliated with Nekton/iRobot and VortexHC, I developed mobile robots based on vorticial flow patterns to generate low-pressure and attraction/suction forces for attachment and wall/ceiling crawling robots, utilizing pressure transducers for subsurface navigation and tracking and flow routing for entrainment, transport and deposition of particulates ranging from micrometer sizes and up. Between 2002 and 2014, while affiliated with Avionic Instruments/Transdigm, I developed ducted fans, filtration for convective cooling systems in aviation/aerospace subsystems (power

NJOY Exhibit 1005.030

management/distribution/generation, autonomy modules, DAQ/DSP, etc.) and, ventilation and gas/vapor management for various battery chemistries (e.g., Li batteries) as well as flow management systems for phase-change materials (PCM). Between 2014 and 2018, while affiliated with Delta Five, I developed filtration systems for cleaning robots (air, water, solvents/soaps, particles, etc.), as well as vapor distribution control systems for telemetered IoT sensors wherein heat, pheromones, kairomones and air were mixed and dispensed to lure targeted pests to traps.

7. Further details regarding my education and work experience are contained in my CV. *See* EX1006.

8. I am being compensated at my standard rate of $500/hour. My compensation is in no way contingent upon my opinions or the outcome of the proceeding.

IV. Relevant Legal Standards

9. I am not an attorney, and therefore my understanding of patent law and the legal standards set forth in this report is based on explanations provided to me by counsel.

10. I understand that for any claim of a patent to claim priority to an earlier application (i.e., to benefit from the earlier application's filing date), the claims of the later patent must be fully supported by the disclosure of the earlier patent

NJOY Exhibit 1005.031

application to which priority is claimed. I understand that in order for the claims to be supported, the earlier application's disclosure must be sufficient to allow a person of ordinary skill in the art to reasonably conclude that the inventors were in possession of the claimed invention.

11. For the purposes of my opinions, I have considered the state of the art as of and shortly before the claimed priority date of November 12, 2013, and the level of knowledge that a POSA would have possessed at that time. Unless I state otherwise, whenever I refer to any principle or technical subject matter as having been known or understood, this is meant to denote the knowledge and understanding of a POSA at or prior to November 12, 2013.

A. Claim Construction

12. It is my further understanding that the numbered paragraphs at the end of the disclosure of a U.S. Patent are the patent "claims" that define the metes and bounds of the alleged invention. I understand that the claims of the Verleur Patents are what is being challenged in the present IPR proceedings.

13. I have been informed that, in this proceeding, the Board must determine the scope of the claims by giving the claims their ordinary and customary meaning in light of the specification, as the claims would be interpreted by one of ordinary skill in the art.

NJOY Exhibit 1005.032

14. I understand that patent claims generally include a "transitional" term or phrase, such as "consisting" or "comprising," which may connect the preamble of the claim to the body of the claim. I have been informed that if a claim uses the term "consisting" as a transition term, that means that the claim is a "closed" claim, which means that the claim is limited to the claim features that follow the transition term and nothing else. On the other hand, I understand that the transition term "comprising" denotes an "open" claim, which means that the claim is not limited to only the features recited in the claim, and could encompass the listed elements as well as other unrecited elements.

15. I understand that 35 U.S.C. § 112(f) created an exception to the general rule of claim construction called a "means plus function" limitation. These types of terms and limitations should be interpreted to cover only the corresponding structure described in the specification, and equivalents thereof. I also understand that a limitation is presumed to be a means plus function limitation if: (a) the claim limitation uses the phrase "means for"; (b) the "means for" is modified by functional language; and (c) the phrase "means for" is not modified by sufficient structure for achieving the specified function.

16. I understand that a structure is considered structurally equivalent to the corresponding structure identified in the specification only if the differences between them are insubstantial. For instance, if the structure performs the same function in

NJOY Exhibit 1005.033

substantially the same way to achieve substantially the same result. I further understand that a structural equivalent must have been available at the time of the issuance of the claim.

B. Invalidity

17. I understand that Petitioner bears the burden of proving that the challenged claims of the Verleur Patents are invalid, and must prove this by a preponderance of the evidence, which means that invalidity must be shown to be more likely than not.

1. Anticipation

18. I have been asked to consider the question of whether the claims of the Verleur Patents would have been anticipated by certain prior art references.

19. I understand that determining anticipation of a patent claim requires a comparison of the claim language to the prior art on a limitation-by-limitation basis.

20. I understand that a prior art reference "anticipates" an asserted claim, and thus renders the claim invalid, if all elements of the claim are disclosed in that prior art reference, either explicitly or inherently (i.e., necessarily present or implied), as those elements are arranged in the claim so that the disclosure effectively puts the public in possession of the invention. I understand that a prior art reference anticipates an asserted claim when each and every element of the claim is disclosed in a single embodiment as arranged in the claim. The mere fact that a

NJOY Exhibit 1005.034

certain outcome may result from a given set of circumstances is insufficient for inherency; rather, inherency requires that the claimed product or process at issue must be a necessary result from the operation as taught by the prior art reference. I understand that, although references cannot be combined for anticipation, additional references may be used to interpret an anticipating reference and shed light on what it would have meant to those skilled in the art at the time of the invention.

21. In order to anticipate a claimed invention, a prior art reference must enable one of ordinary skill in the art to make the invention without undue experimentation, i.e., provide an enabling disclosure. A prior art reference need not enable its full disclosure; it only needs to enable the portions of its disclosure alleged to anticipate the claimed invention.

2. Obviousness

22. I have been asked to consider the question of whether the claims of the Verleur Patents would have been obvious. I understand that this analysis must be conducted from the perspective of the person of ordinary skill in the art, and whether the skilled artisan would consider any differences between the prior art and what is claimed to have been obvious. To make this assessment, I have been informed that the concept of patent obviousness involves four factual inquiries: (1) the scope and content of the prior art; (2) the differences between the claimed invention and the prior art; (3) the level of ordinary skill in the art; and (4) secondary considerations

NJOY Exhibit 1005.035

of non-obviousness. I have been instructed that one must not engage in hindsight. Rather, I understand that one should instead consider what the person of ordinary skill in the art would have reason to pursue further, and steps that were routinely done, such as in response to known problems, or obstacles.

23. It is my understanding that the following is a non-exhaustive list of rationales that may support the obviousness of an invention: combining prior art elements according to known methods to yield predictable results; simple substitution of one known element for another to obtain predictable results; use of a known technique to improve a similar device (method, or product) in the same way; applying a known technique to a known device (method, or product) ready for improvement to yield predictable results; choosing from a finite number of identified, predictable solutions, with a reasonable expectation of success; and some teaching, suggestion, or motivation in the prior art that would have led a POSA to modify the prior art reference or to combine prior art reference teachings to arrive at the claimed invention.

24. It is my understanding that the motivation to combine prior art references may be implicit and may be found in the knowledge of one of ordinary skill in the art, or in the nature of the problem to be solved. Specifically, it is my understanding that an implicit motivation to combine exists not only when a suggestion may be gleaned from the prior art as a whole, but when the

NJOY Exhibit 1005.036

"improvement" is technology-independent and the combination of references results in a product or process that is more desirable, for example because it is stronger, cheaper, cleaner, faster, lighter, smaller, more durable or more efficient. It is my further understanding that the motivation to combine references may be found in the nature of the problem to be solved where prior art references are directed to precisely the same problem.

25. I also understand that prior art may be relied on for its express disclosure and teachings. I also understand that the prior art may be relied upon for a teaching of features that are necessarily present in the prior art reference even if that specific feature is not expressly or explicitly disclosed.

26. I have been informed that prior art used for obviousness must be analogous art. I understand that prior art is analogous art if it is either: 1) art from the same field of endeavor, regardless of the problem addressed, or 2) reasonably pertinent to the particular problem which the inventor is involved.

27. I understand that before reaching any final conclusion on obviousness, the obviousness analysis requires consideration of objective indicia of non-obviousness, if any such indicia are offered. These must be considered to ensure that, for example, there were not some unanticipated problems, obstacles or hurdles that may seem easy to overcome in hindsight, but which were not readily overcome prior to the relevant invention date of the patents/claims at issue here. I understand that

NJOY Exhibit 1005.037

these objective indicia are also known as "secondary considerations of non-obviousness," and may include long-felt but unmet need and unexpected results, among others. I also understand, however, that any offered evidence of secondary considerations of non-obviousness must be commensurate with the scope of the challenged claims. This means that for any offered evidence of secondary considerations of non-obviousness to be given substantial weight, I understand the proponent of that evidence must establish a "nexus," or a sufficient connection or tie between that evidence and the merits of the claimed invention, which I understand specifically incorporates any novel element(s) of the claimed invention. If the secondary consideration evidence offered actually results from something other than the merits of the claim, then I understand that there is no nexus or tie to the claimed invention. I also understand it is the Patent Owner who has the burden of proving that a nexus exists, and I understand that secondary considerations will not overcome a strong showing of obviousness.

C. Person of Ordinary Skill in the Art

28. I have been asked to review the Verleur Patents from the perspective of a person of ordinary skill in the art ("POSA") as of the earliest claimed priority date for the patents—November 12, 2013.

29. It is my opinion that a POSA relevant to the Verleur Patents would have had at least a B.S. degree in Mechanical Engineering, Electrical Engineering,

NJOY Exhibit 1005.038

Industrial Design, Product Design, or similar field, with at least two years of industry experience in one of these fields, and such POSA would have been familiar with electrically powered vaporizing articles, their components or the underlying technologies.

30. Based on my education, training and experience, it is my opinion that I can accurately represent the views of a POSA as of the earliest claimed priority date of November 12, 2013 for the ’722 patent and the ’981 patent. The opinions I provide in this declaration are provided using the viewpoint of the POSA as of that date. I note, however, that if the patents are accorded a later priority date, my opinion would not change.

V. Background of the Technology

A. E-Cigarette

31. As of 2013, the earliest priority date of the Verleur Patents, e-cigarettes or vaporizers had been well known and widely used as an alternative to traditional cigarettes. A typical e-cigarette as of the priority date of the Verleur Patents comprises a vaporizable substance such as a nicotine-containing liquid, a heating element (also referred to as “atomizer”) for vaporizing the substance, a wick for transporting the liquid to the heating element, and a power source for powering the heating element.

NJOY Exhibit 1005.039

32. For example, U.S. Patent 2,057,353, issued on October 13, 1936, discloses a vaporizing device with "a hollow glass container adapted to hold a liquid medicament[,]" "a filament or heating element…energized by an electric current," "a wick…whereby said medicament will be carried by capillary action to a point where it will be vaporized by the heat from the filament[,]" and "an electric battery cell[.]" EX1020, 1:19-28, 1:53-2:8, 4:43-46.

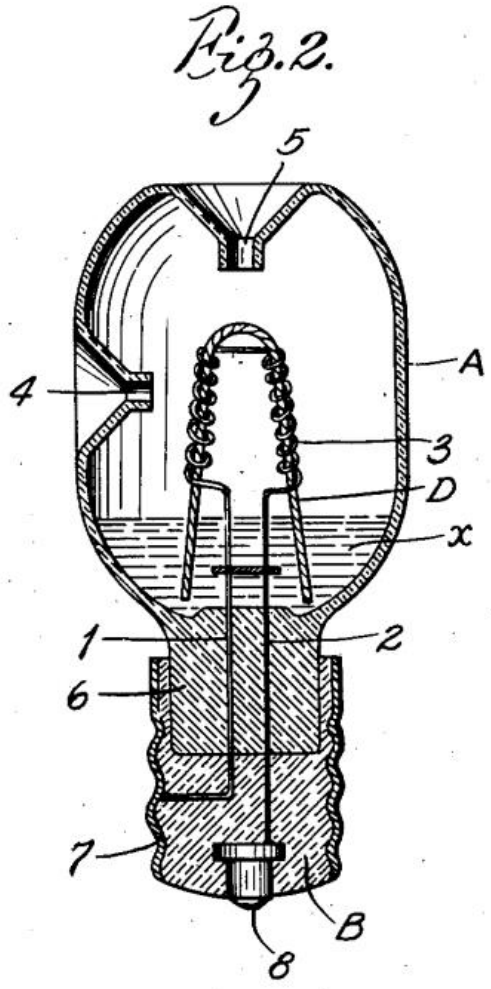

EX1020, Fig. 2

NJOY Exhibit 1005.040

See also e.g., EX1033, [0004] ("The present invention relates to…a cartomizer e-cigarette in which a battery unit is connected to a cartomizer unit which includes a liquid chamber, an atomization chamber and a guiding wick…").

B. Cartomizer Design

33. It was well-known by late 2000 that an e-cigarette may include a liquid-containing cartridge that is removably attached to a main body containing a battery. For example, U.S. Patent No. 8,863,752 discloses an e-cigarette having a "battery assembly, an atomizer assembly and a cigarette bottle assembly," where the atomizer assembly (comprising a heating element) and the cigarette bottle assembly (comprising a vaporizable liquid) are removably connected to the battery assembly to form a complete vaping device. EX1021, 1:63-2:4.

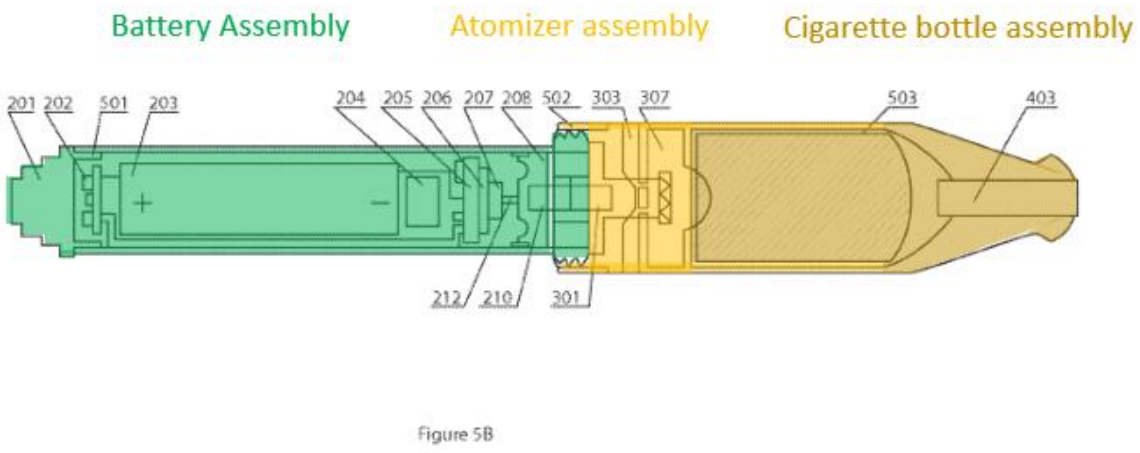

EX1021, Fig. 5B

See also EX1022, Abstract (similarly disclosing an e-cigarette having parts containing a liquid reservoir and a heating element connected to a power source).

NJOY Exhibit 1005.041

34. It was also well known that a cartridge may combine a storage unit for vaporizable liquid with a heating element (i.e., atomizer), and such a cartridge is commonly referred to as a "cartomizer" in the art. EX1033, [0008] ("A 'cartomizer' option is available for many e-cigarettes. The cartomizer replaces the separate cartridge and atomizer components with a single integrated component").

35. The cartridge (or cartomizer) and the power source may be connected in various ways such as a threaded connection. *See e.g.*, EX1022, [0043] ("The proximal end 90 of the rechargeable power portion 40 includes an external screw-thread, which engages with the internal screw thread of the distal end 80 of the cartridge portion 30."). As another example, one end of the power source may contain a recess for receiving the cartridge. *See e.g.*, EX1024, Fig. 7; EX1025, [0005], Figs. 2-4.

NJOY Exhibit 1005.042

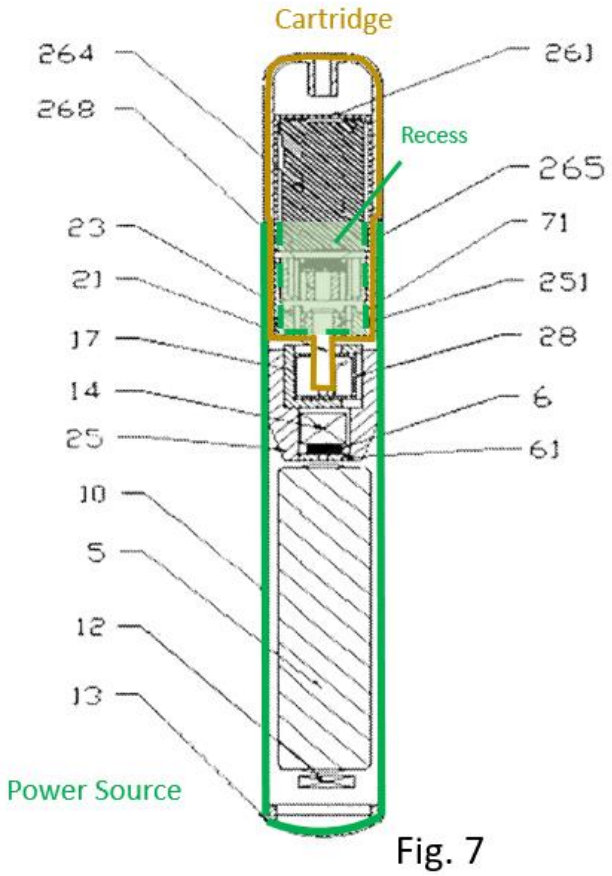

EX1024, Fig. 7

See also EX1014, 4:27-33 (disclosing an e-cigarette comprising a "disposable tobacco flavor unit…inserted into a reusable 'permanent' portion including a source of electrical energy[.]"); EX1015, 5:22-23 ("A cartridge 150 may be inserted into the distal end of personal vaporizer unit 100.").

36. By the earliest priority date of the '722 Patent, it was also known that the cartridge can be magnetically coupled to the power source. Magnetic coupling makes connection and removal of the cartridge easier. *See e.g.*, EX1025, [0003]

NJOY Exhibit 1005.043

("An object of the present invention is to provide an electronic cigarette with magnetic connection which makes assembly of the electronic cigarette convenient and quick."); EX1026, 6:15-24 (disclosing "an aerosol delivery device…compris[ing] a control body 102 and a cartridge 104 that can be…detachably aligned [via]…magnetic engagement").

C. Charging Contacts

37. By 2013, a POSA would have known that the battery in an e-cigarette is typically and preferably rechargeable. By having a rechargeable battery, the consumer avoids having to replace the primary batteries, which reduces the cost to the consumer. *See* EX1033, [0011] ("Most portable e-cigarette battery units contain a rechargeable lithium-ion battery.").

38. Moreover, a POSA would have known that the rechargeable battery may be recharged via charging contacts placed at an end of the e-cigarette. For example, as shown below, U.S. Patent No. 8,156,944, published in 2009, discloses an e-cigarette comprising "a rechargeable battery, which has a flexibly connected charging plug. The blades of the said plug come out of the other end of the said shell." EX1027, 2:10-13; *see also id.*, 4:1-5 ("When the rechargeable battery…runs out of power, it may be directly plugged into the charger for charging, with no need to remove the rechargeable battery, resulting in very easy use.").

NJOY Exhibit 1005.044

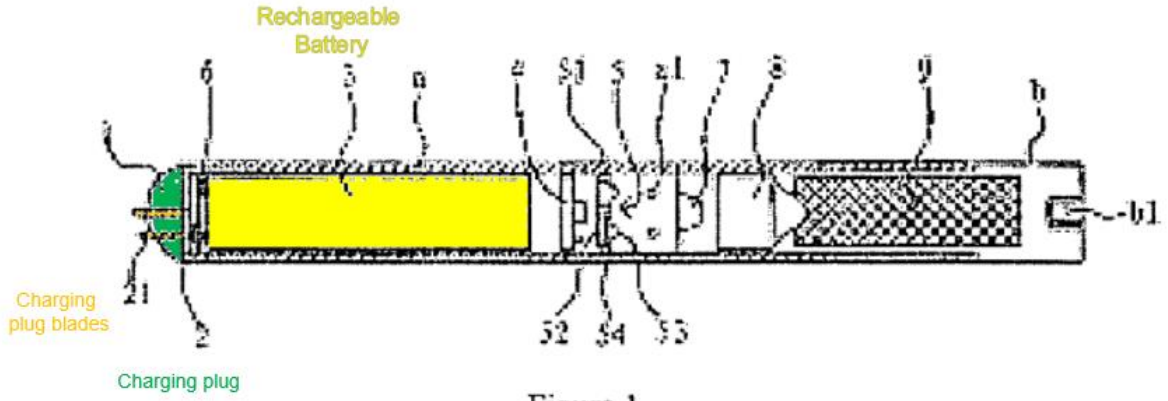

Figure 1

EX1027, Fig. 1

See also e.g., EX1028, 6:1-5, Fig. 2 (disclosing a USB port at an end of an e-cigarette for recharging the battery); EX1029, 15:10-21, Fig. 7 (disclosing charging contacts disposed at an end of the e-cigarette).

D. Translucent Window

39. By 2013, a POSA would have known that an e-cigarette may include translucent material to provide a window to see into the cartridge. This provides the adult consumer the ability to see the content within the cartridge, such as the vaporizable liquid. *See e.g.*, EX1030, 4:32-35 (disclosing a cartridge "made of transparent material, for facilitating to observe the amount of the internal liquid smoke, and prevent an empty burning of the heating wire after the liquid smoke has run out."); EX1034, [0038] (disclosing an e-cigarette with an "outer tube [] includ[ing] a clear (transparent) window 71 formed of a transparent material so as to allow a smoker to see the amount of liquid material remaining in the liquid supply

NJOY Exhibit 1005.045

reservoir 22."); EX1031, 4:22-25 ("The liquid reservoir includes a clear or translucent window 13…for visually determining the liquid level 15 within the liquid reservoir.").

40. A POSA also would have known, both from teachings of the prior art and from the general knowledge of a POSA, that where the cartridge is transparent, any shell covering the cartridge would require a translucent window to preserve the ability to observe the liquid level. *See e.g.*, EX1008, 5:17-21 (disclosing an e-cigarette having a transparent liquid smoke cup for storing vaporizable substance, and a transparent shell covering the cup to "facilitate to observe the amount of the liquid smoke in the liquid smoke cup []."); EX1053, 7:31-41 ("a transparent peeping window (not shown) can be formed in that portion of the side wall of the casing 12 which corresponds to the liquid container 32… to observe the remaining amount of the liquid flavor source 34 within the liquid container 32. In this case, the liquid container 32 itself must be formed of a transparent or translucent material. Naturally, the remaining amount of the liquid flavor source 34 within the liquid container 32 can be observed through the peeping window so as to find the timing of replenishing the liquid flavor source 34.").

NJOY Exhibit 1005.046

VI. Prior Art References

A. Pan (EX1024)

41. U.S. Pat. No. 8,205,622 ("Pan"), titled "Electronic Cigarette," was filed on May 7, 2009. I have been informed by counsel that Pan is prior art under at least 35 U.S.C. § 102(a)(2) because it was filed before the earliest priority date of the Verleur Patents.

42. Pan discloses an electronic cigarette having an "electronic inhaler" portion and an "electronic atomizer" portion.

> An electronic cigarette has two tubes that resemble a cigarette: an electronic inhaler and an electronic atomizer. The two tubes are connected through one or more electric connectors to form an electronic cigarette. Inside the inhaler is a rechargeable or non-rechargeable power source such as a battery, which supplies electric power to the electronic inhaler and atomizer and ensures that both work together like a cigarette.
>
> ***
>
> An electronic cigarette of the present invention preferably is comprised of two parts, one being an electronic inhaler and the other being an integrated electronic atomizer. Each part may have a metal or plastic tube, and the two tubes may have an identical or similar diameter. The inhaler preferably includes one or more of an electric power source, electric sensor, Single Chip Micyoco, and LED indicator. The electric power source, which can be a rechargeable or non-rechargeable battery, supplies electricity to the atomizer to vaporize a liquid inside an atomizer chamber.

EX1024, Abstract, 2:25-35.

43. The electronic inhaler, shown in Fig. 5, houses an electric power source 5, which may be a rechargeable battery.

NJOY Exhibit 1005.047

> FIG. 5 is a section view of another electronic inhaler having a first electric connector 17 of a DC plug-socket type. The electronic inhaler includes an inhaler tube 10, cigarette cap 13 with small holes for air inflow, LED indicator 12, electric power source 5, seal piece 25, sensor supporter 61, electric airflow sensor 6, integrated circuit board with a CPU processor 14, and the first electric connector 17 located on the DC socket seat 28.
>
> ***
>
> The inhaler tube 10 is made of either a metal or a plastic. **The electric power source 5 may be a battery of rechargeable or non-rechargeable type.** The first electric connector is generally made of copper or another metal conductor.

Id., 5:29-36, 5:46-49. (emphasis added)

44. As shown in Fig. 5, the electronic inhaler further includes a chamber to receive the integrated electronic atomizer.

NJOY Exhibit 1005.048

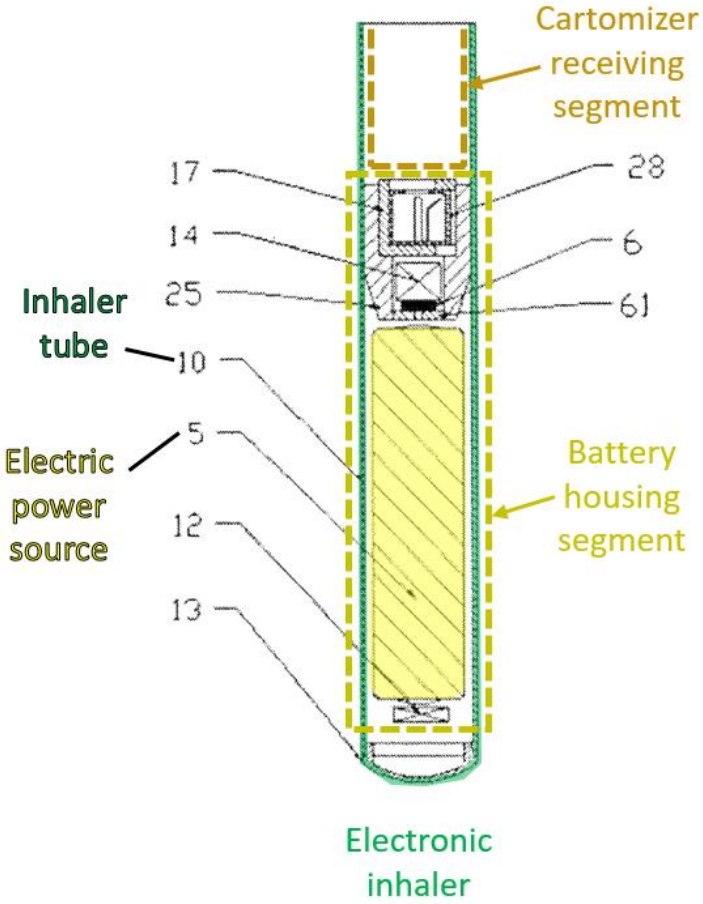

EX1024, Fig. 5

45. The electronic atomizer, shown in Fig. 3, comprises "a liquid-storing media 264[] [being filled with liquids]" and a "heat equalizer 269 twined with an electric heating wire 265[.]" *Id.*, 4:63-5:2.

NJOY Exhibit 1005.049

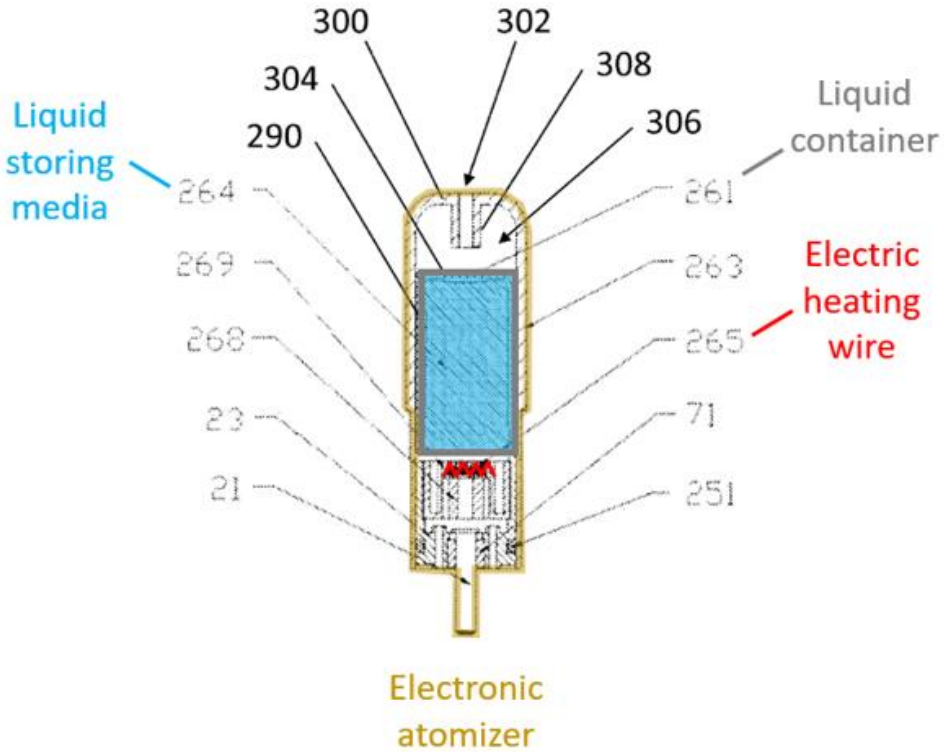

EX1024, Fig. 3

46. As shown in Fig. 7, the electronic atomizer is configured to mechanically and electrically connect to the inhaler portion when inserted into the chamber.

> FIG. 7 is a section view of another electronic cigarette when the electronic inhaler and electronic atomizer are connected via the electric connectors of the DC plug-socket type. The electronic inhaler and the integrated electronic atomizer are fit together through their connectors of the same type to form the electronic cigarette. The connection is done through the first electric connector socket 28 of the electronic inhaler and the second electric connector plug 21 of the integrated electronic atomizer. **The connection achieves the electric combination of the inhaler tube and the atomizer tube**, each of which has a circular cross section in this embodiment, wherein the diameter is the inhaler is the same as or similar to that of the atomizer. The user puffs on the end of the electronic cigarette with the air-puffing hole to activate the CPU

NJOY Exhibit 1005.050

processor through detection of an airflow signal and generate an electric current flowing through the electric heating wire, which achieves vaporization of the solution inside the liquid container.

Id., 6:1-18. (emphasis added)

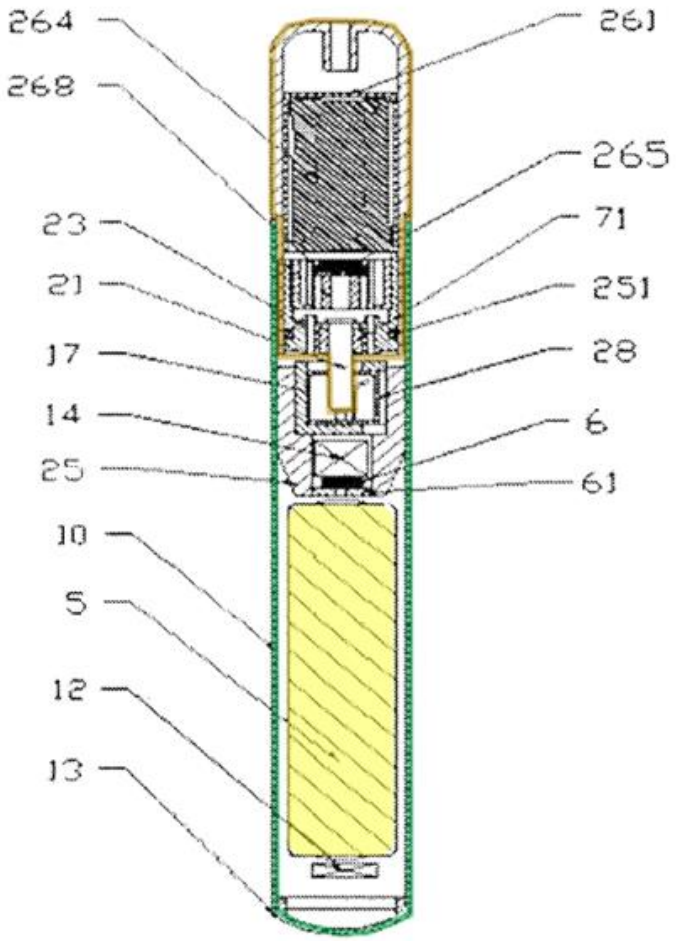

Electronic atomizer
connected to
Electronic inhaler

EX1024, Fig. 7

NJOY Exhibit 1005.051

B. Levin (EX1003)

47. U.S. Patent No. 9,427,022 ("Levin"), titled "Electronic Vaporizing Device and Methods for Use," was filed on March 12, 2013. I have been informed by counsel that Levin is prior art under at least 35 U.S.C. § 102(a)(2) because it was filed before the earliest priority date of the Verleur Patents.

48. Levin discloses a vaporization device with a mouthpiece portion that is detachably engaged with a main body.

> The device 100 includes a proximal portion having a mouthpiece 1 from which a user inhales the vaporized substance using the device 100 and a main body 2 housing the power source and electronics of the device 100, including the heating Source for vaporizing the selected substance and a light-emitting assembly or LED disposed near the distal end covered by a translucent or clear end-cap 38.
>
> ***
>
> In an example embodiment, such as shown in FIGS. 1A-1B, the device includes a main body 2 having a main body housing 20 that encases the internal components, such as the power source (e.g. batteries), a USB receptacle for recharging, a distal light Source or LED, the heating unit, and at least a portion of a grinding chamber (the remaining portion often being attached to a removable portion or to a proximal portion having a mouthpiece).

EX1003, 22:7-14, 10:31-38.

49. I consider the main body to be the power source portion because it contains a battery.

NJOY Exhibit 1005.052

50. Levin further discloses that the mouthpiece portion and the power source portion may be engaged to create a "grinder" for grinding up nicotine containing substances, such as tobacco leaves, before vaporization.

> The distal portion includes a distal grinder portion 42 which interfaces with the proximal grinder portion 44 of the distal portion 2 when the components are assembled during use so as to form a grinder 40. Rotating the proximal portion 1 relative the distal portion 2 moves the corresponding burrs of the grinder 40 so as to grind and eviscerate the selected substance placed within the grinder.
>
> ***
>
> In certain embodiments, such as those shown in each of FIGS. 2A, 3C, 5A, 6A, 9A and 13, the device includes a grinder integral to the device for grinding selected substances having active ingredients therein, such as intact tobacco leaves or other herbal or plant matter, into minute particles suitable for vaporization of the selected substance for inhalation by a user.

EX1003, 22:64-23:3 19:29-35.

51. Levin teaches a magnetic connection between the mouthpiece portion and the power source portion.

> Often, the proximal grinder portion includes one or more magnets interfaceable with one or more corresponding magnets in the distal grinder portions, configured so that when the magnets are interfaced, the undulating surfaces of each portion are interfaced, and when the magnets are separated, the undulating surfaces of each portion are separated.
>
> ***
>
> The device includes one or more magnets distributed about interfacing surfaces of the proximal and distal grinder portions (often, one at each corner In certain embodiments having a cross-section shaped like a square with rounded corners.

NJOY Exhibit 1005.053

EX1003, 3:64-4:2 19:63-67.

52. Figure 9A shows an exemplary embodiment in which the mouthpiece and the power source portion each contain four corresponding magnets configured to attract to each other. EX1003, 20:52-53.

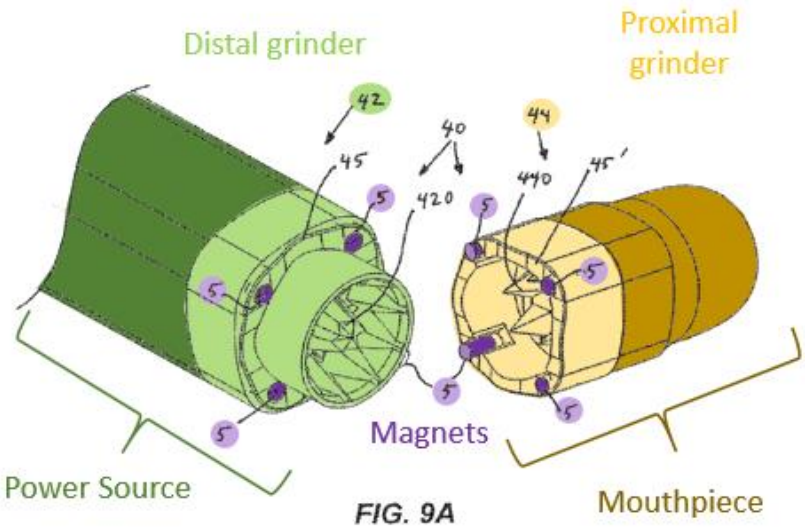

EX1003, Fig. 9A

53. Moreover, Levin discloses a port, such as a micro-USB charging port, to recharge its power source.

> In certain embodiments, such as shown in FIGS. 14A-14C, **the device includes a port 31 to recharge the power source 30, such as a micro-USB charging port** located on a printed circuit board behind a distal lens tip or endcap. **The port may be used to recharge non-removable batteries by connecting a recharging cable 70, such as a USB cable, to the port**, which may utilize a wall charging adapter or cigarette lighter adapter in an automobile. In an example embodiment, the device includes two 3.7 V lithium ion batteries placed in series, which are charged by electrically coupling the batteries to an external wall supply with a current of about 1.5 A to 1.8 A. Generally, the maximum charging current drawn is 1.8 A and a completely discharged device

NJOY Exhibit 1005.054

may take from 1 to 2 hours to fully charge. As shown in FIGS. 14A-14C, the device may include a recharging port 31 for connecting with a USB cord 70 for recharging of the rechargeable power source 30, as described above.

In certain embodiments, the distal end also includes a recharging port 31, such as in a USB connector 31 or a pin receptacle as shown in FIGS. 6A-6D, so as to facilitate recharging of the power source therein.

EX1003, 14:10-26 (emphasis added); 23:58-62; *see also id.*, Figs. 6A-6D, 14A-14C.

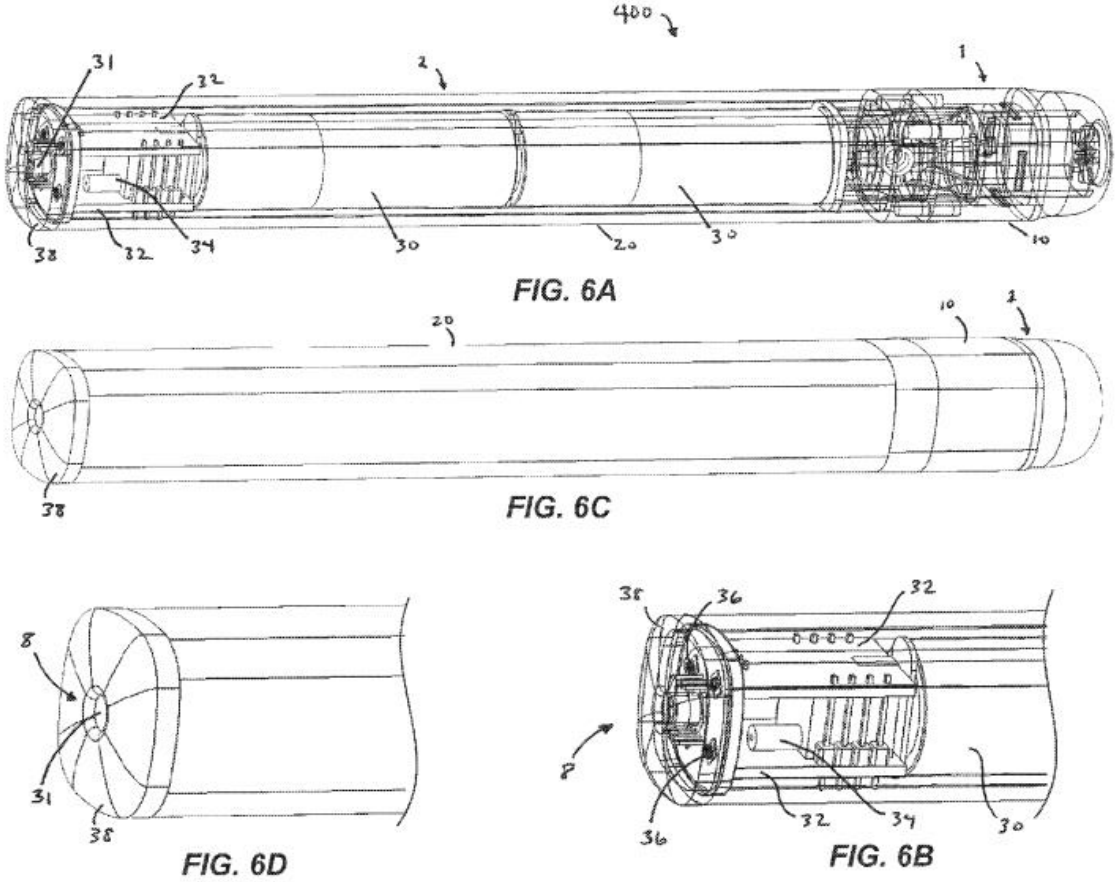

EX1003, Figs. 6A-6D

NJOY Exhibit 1005.055

FIG. 14A

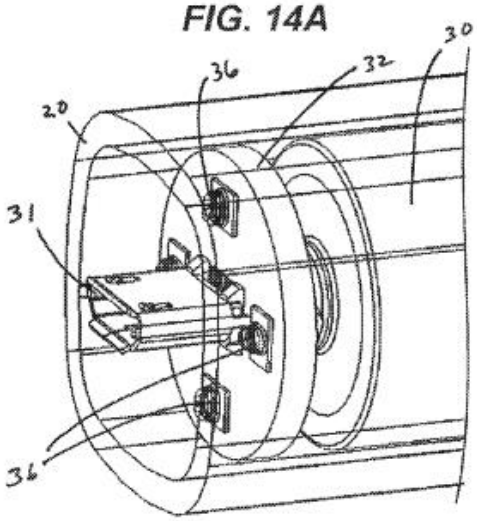

FIG.14B

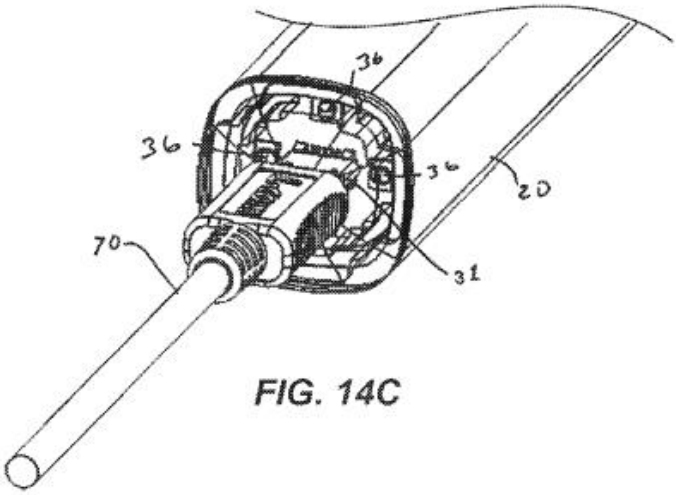

FIG. 14C

EX1003, Figs. 14A-14C

NJOY Exhibit 1005.056

C. Thorens788 (EX1004)

54. WO 2011/160788 A1 ("Thorens788"), titled "An Improved Aerosol Generator and Liquid Storage Portion for Use with the Aerosol Generator", was filed on June 15, 2011. I have been informed by counsel that Thorens788 is prior art under at least 35 U.S.C. § 102(a)(2) because it was filed before the earliest priority date of the Verleur Patents.

55. Thorens788 discloses a smoking system comprising a replaceable liquid storage portion configured to engage with a reusable aerosol generating system.

> In this way, when the liquid storage portion is removed from the aerosol generating system, both the liquid storage portion and the heating element are removed. Then both the liquid storage portion and the heating element which has been removed from the aerosol generating system may be replaced or substituted with another liquid storage portion and heating element.

EX1004, 2:1-4.

> According to a third aspect of the present invention, there is provided an aerosol generating system for receiving a liquid storage portion configured for use with the aerosol generating system, the system comprising: means for determining an electrical characteristic of an electrical component associated with the liquid storage portion; and means for distinguishing the liquid storage portion from other liquid storage portions for use with the aerosol generating system based on the determined electrical characteristic of the electrical component associated with the liquid storage portion.

EX1004, 2:26-32.

NJOY Exhibit 1005.057

56. I consider the aerosol generating system (also referred to as the "aerosol generator") to be a battery portion, because it includes a battery.

> In one embodiment, the aerosol generating system is a smoking system. Preferably, the aerosol generating system or the smoking system is an electrically heated aerosol generating system or electrically heated smoking system. In that embodiment, the smoking system may further comprise an electric power supply. Preferably, the electric power supply comprises a cell contained in a housing. The electric power supply may be a Lithium-ion battery or one of its variants, for example a Lithium-ion polymer battery. Alternatively, the power supply may be a Nickel-metal hydride battery, a Nickel cadmium battery, a Lithium-maganese battery, a Lithium-cobalt battery or a fuel cell. In that case, preferably, the electrically heated smoking system is usable by a smoker until the energy in the power cell is used up. Alternatively, the electric power supply may comprise circuitry chargeable by an external charging portion. In that case, preferably the circuitry, when charged, provides power for a pre-determined number of puffs, after which the circuitry must be reconnected to the external charging portion. An example of suitable circuitry is one or more capacitors or rechargeable batteries.

EX1004, 9:21-33.

57. The liquid storage portion may further comprise a heating element and a wick. EX1004, 1:35-36 ("The liquid storage portion may further comprise a heating element. Preferably, the heating element is integral to the liquid storage portion."); 6:28 ("The liquid may be provided by at least one portion of a capillary wick."); 7:12-13 ("Preferably, the capillary wick is arranged to be in contact with liquid in the liquid storage portion.").

58. Thorens788 further discloses that the liquid storage portion, wick, and heating element preferably form a separate and disposable part and may be contained

NJOY Exhibit 1005.058

with a housing (i.e., mouthpiece). EX1004, 10:25-26 ("Preferably, the smoking system comprises a housing. The housing may comprise a shell and a mouthpiece."); 10:28-29 ("Preferably, the liquid storage portion, the capillary wick, the at least one heater and the air outlet are contained in the mouthpiece."); 16:4-6 ("The liquid storage portion 113, wick 117, heating element 119,…may form a single unit which is disposable. The unit may also be replaceable.").

> Preferably, the smoking system comprises a housing. The housing may comprise a shell and a mouthpiece….In the case of an electrically heated smoking system, preferably, the electric power supply and the electric circuitry are contained in the shell. Preferably, the liquid storage portion, the capillary wick, the at least one heater and the air outlet are contained in the mouthpiece. The at least one air inlet may be provided in either the shell or the mouthpiece. Preferably, the mouthpiece is replaceable. Having a shell and a separate mouthpiece provides a number of advantages. Firstly, if the replaceable mouthpiece contains the at least one heater, the liquid storage portion and the wick, all elements which are potentially in contact with the liquid are changed when the mouthpiece is replaced. There will be no cross-contamination in the shell between different mouthpieces, for example ones using different liquids. Also, if the mouthpiece is replaced at suitable intervals, clogging of the heater with liquid is avoided. Preferably, the shell and mouthpiece are arranged to releasably lock together when engaged.

EX1004, 10:25-11:1.

59. Figure 3 of Thorens788 depicts the liquid storage portion 113, along with the heating element 119, wick 117, and electrical contacts 421, 423, and 425. EX1004, 14:5-6 ("Referring now to Figure 3, this shows a detailed section taken through a liquid storage portion 113 according to an embodiment of the invention.").

NJOY Exhibit 1005.059

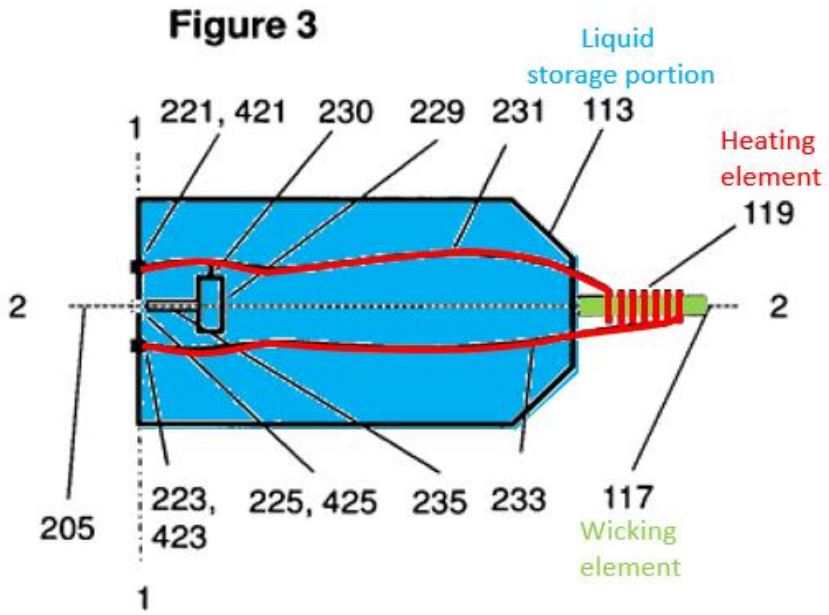

EX1004, Fig. 3

60. Figure 2 of Thorens788 depicts a portion of the aerosol generating system (i.e., battery portion) that engages with the liquid storage portion. The aerosol generating system comprises three electrical contacts 211, 213, 215, which connects to corresponding electrical contacts 221, 223, and 225 in the liquid storage portion. EX1004, 15:16-19 ("The electrical contacts 221 or 421, 223 or 423, 225 or 425, on the liquid storage portion 113 are arranged so that they contact corresponding electrical contacts 211, 213, 215, on the aerosol generating system 100 when the liquid storage portion 113 is inserted into the aerosol generating system 100."). Figure 2 also shows that the aerosol generating system forms an aerosol forming chamber 127. EX1004, 12:28-30 ("In the aerosol forming chamber 127, the vapour

NJOY Exhibit 1005.060

condenses to form an inhalable aerosol, which is carried 30 towards the outlet 125 and into the mouth of the user.”).

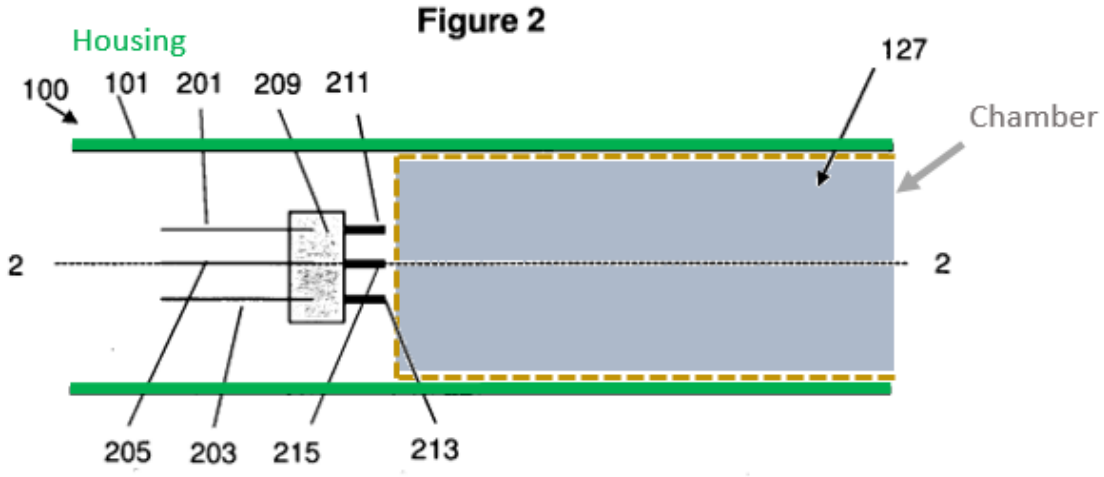

EX1004, Fig. 2

61. Figure 4 of Thorens788 shows the liquid storage portion inserted into the aerosol forming chamber of the aerosol generating system to form the complete smoking system. EX1004, 15:15-16 (“Figure 4 shows the liquid storage portion 113 of Figure 3 inserted into the aerosol generating system 100 of Figure 2.”). Thorens788 also discloses that “[i]n the embodiment shown in Figure 4, the liquid storage portion 113 is replaceable.” EX1004, 15:22-23.

NJOY Exhibit 1005.061

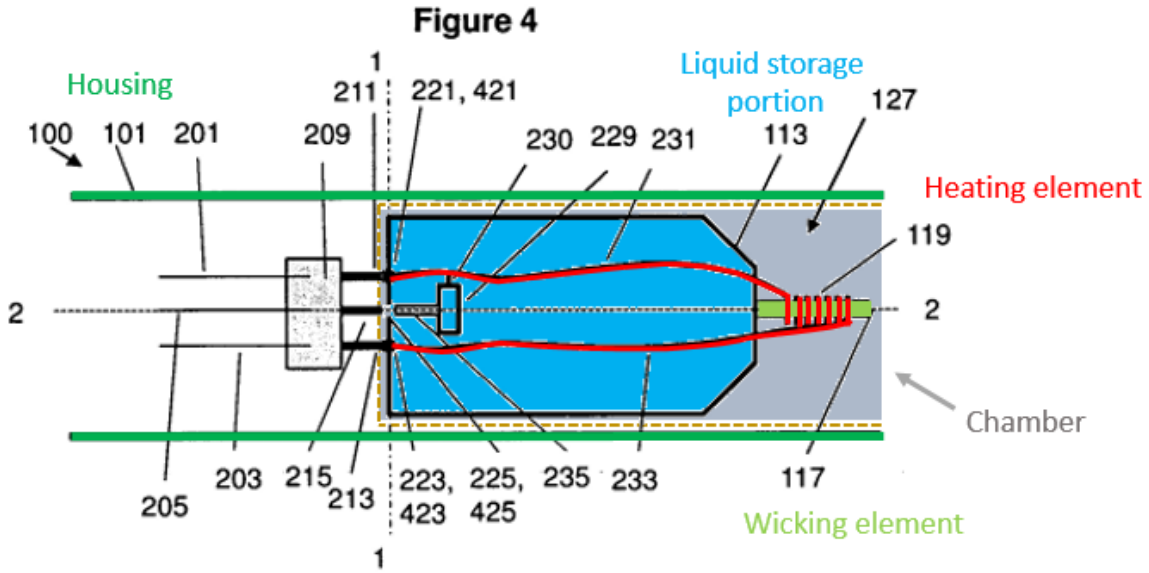

EX1004, Fig. 4

D. Thorens231 (EX1002)

62. U.S. Patent No. 8,794,231 ("Thorens231"), titled "Electrically Heated Smoking System Having a Liquid Storage Portion", was filed on April 29, 2009, before the earliest possible priority date of the '722 Patent. I have been informed by counsel that Thorens231is prior art under at least 35 U.S.C. § 102(a)(2) because it was filed before the earliest priority date of the Verleur Patents.

63. Thorens231 discloses "an electrically heated smoking system comprising a shell and a replaceable mouthpiece, the shell comprising an electric power supply and electric circuitry." EX1002, 1:52-54. Thorens231 discloses that the power supply may be a battery. EX1002, 4:7-10 ("Preferably, the electric power supply comprises a cell contained in the shell. The electric power supply may be a

lithium-ion battery or one of its variants, for example a lithium-ion polymer battery.”).

64. The shell comprises a recess at an end opposite the battery, configured to insertably receive the replaceable mouthpiece. EX1002, 6:52-57 (“The mouth piece 201 is designed to engage with the shell 101 of FIG. 1. FIG. 3 shows the shell 101 of FIG. 1 engaged with the mouthpiece 201 of FIG. 2 to form an electrically heated Smoking system 301 arranged to supply aerosol to a user on demand.”).

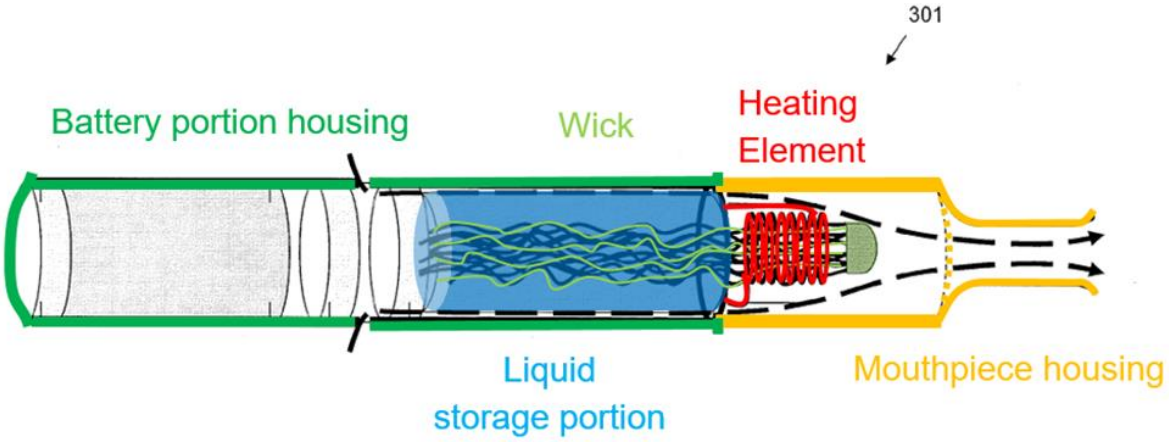

EX1002, Fig. 3

65. Thorens231’s mouthpiece contains a cartridge containing a liquid, a heating coil configured to vaporize the liquid, and a wick configured to transport the liquid to the heating element via capillary action. EX1002, 6:44-50 (“The mouthpiece 201 comprises a liquid storage portion in the form of cartridge 203 containing liquid 205, a capillary wick 207, a heating element in the form of heating coil 209…”).

NJOY Exhibit 1005.063

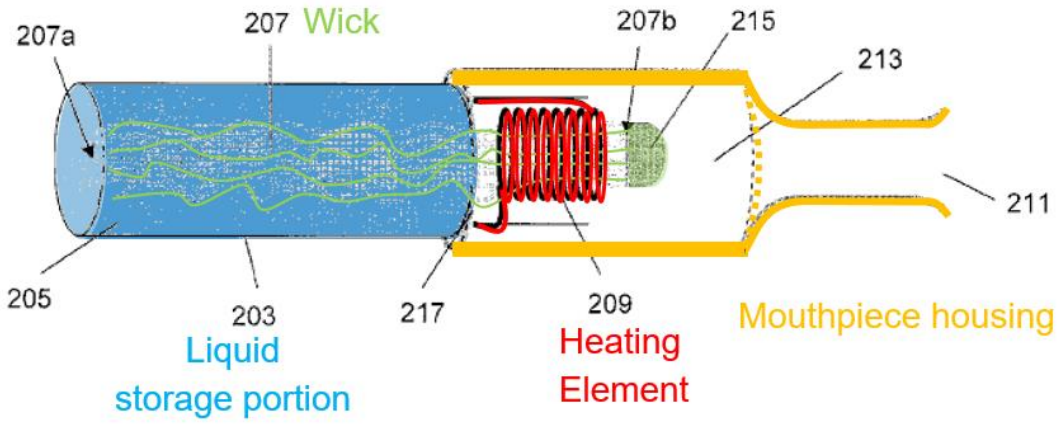

EX1002, Fig. 2.

E. Liu783 (EX1010)

66. U.S. Pat. Pub. No. 2014/0150783A1 ("Liu783"), titled "Electronic Cigarette Having A Connector for Magnetic Connection," was filed on December 5, 2012. I have been informed by counsel that Liu783 is prior art under at least 35 U.S.C. § 102(a)(2) because it was filed before the earliest priority date of the Verleur Patents.

67. Liu783 discloses an e-cigarette with a magnetic connector 92 between a power rod 95, containing a battery, and an atomizer 91.

> The present invention relates to an electronic cigarette having **a connector for magnetic connection**, including a sucking rod and a power rod detachably connected with the sucking rod, wherein, **the sucking rod includes a replaceable atomizer and a connector for connecting the atomizer and the power rod and transporting electricity of the power rod to the atomizer, the connector is magnetically connected with the atomizer, and detachably**

NJOY Exhibit 1005.064

connected with the power rod. The electronic cigarette having a connector for magnetic connection of the present, can decrease manufacture and use cost of the electronic cigarette, and facilitate the installation, detachment and replacement of the electronic cigarette.

***

As shown from FIG. 1 to FIG. 8, an embodiment of the present invention provides an electronic cigarette having a connector for magnetic connection. The electronic cigarette having a connector for magnetic connection comprises a sucking rod 90 and a power rod 95, the sucking rod 90 is constituted by an atomizer 91 and a connector 92 insertably assembled together, **the connector 92 is located between the atomizer 91 and the power rod 95, for connecting the atomizer 91 and the power rod 95 and transporting the electricity of the power rod 95 to the atomizer 91**. **The connector 92 has its one end magnetically connected with the atomizer 91, and another end thereof detachably connected with the power rod 95**. An end of the atomizer 91 mated with the connector 92 is configured with a first connecting mechanism 5, correspondingly, the end of the connector 92 mated with the atomizer 91 is configured with a second connecting mechanism 6, the atomizer 91 and the connector 92 is mutually connected together by magnetic adsorption, and the atomizer 91 and the connector 92 are magnetically connected in a manner of one inserting into another. FIG. 1 shows the orientation of the present embodiment with reference.

***

As shown in FIG. 8, the power rod 95 is substantially tubular-shaped, and its end connected with the connector 92 is configured with an inner thread joint 951 mating with the outer thread joint, the inner thread joint 951 is configured with a lower pole 952 therein to abut against the upper pole 623 for conduction, and the lower pole 952 is fixed in the inner thread joint 951 by means of an insulating sleeve 953; the lower pole 952 defines a vent coaxially extended therethrough. The inner thread joint 951 and the lower pole 951 respectively serve as a first electrode and a second electrode of the power rod 95. **The power rod 95 is configured with a storage battery 955 and so on**. The storage battery 955 has its first electrode and second electrode to be respectively electrically connected with the inner thread joint 951 and the lower pole

NJOY Exhibit 1005.065

> 952. The power rod 95 has its another end configured with an end cap 956, and the end cap 956 is configured with an indicator light and intake holes (not shown).

Ex1010, Abstract (emphasis added), [0030] (emphasis added), [0043] (emphasis added).

68. As shown in Figs. 1 and 2, the connector 92 has one end detachably and threadedly connected to the power rod 95 and the other end magnetically connected to atomizer 91. Ex1010, [0030], [0037].

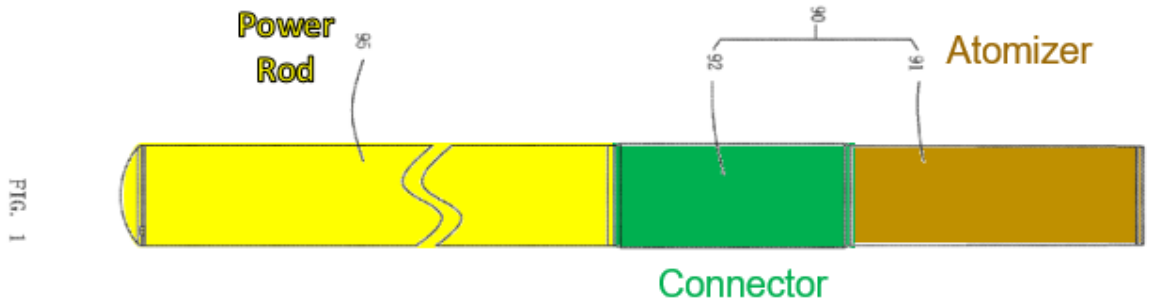

EX1010, Fig. 1

NJOY Exhibit 1005.066

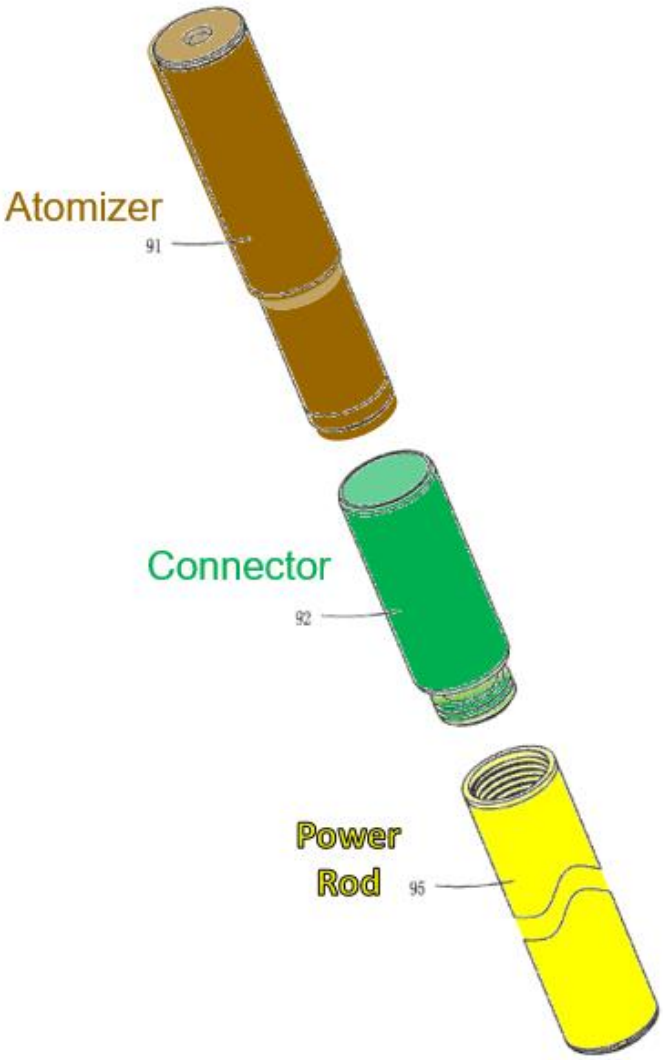

EX1010, Fig. 2

69. Liu783 discloses that the atomizer comprises a liquid smoke cup 3 for storing vaporizable substance and an atomizing mechanism for transforming the liquid smoke into vapor. *Id.*, [0031], [0034]. More specifically, the atomizing mechanism 21 "comprises a heating wire 211, and a fiber member 212 for absorbing

NJOY Exhibit 1005.067

liquid smoke and supporting the heating wire 211[.]" *Id.*, [0034]. The assembled device is shown in Fig 3, as reproduced and annotated below:

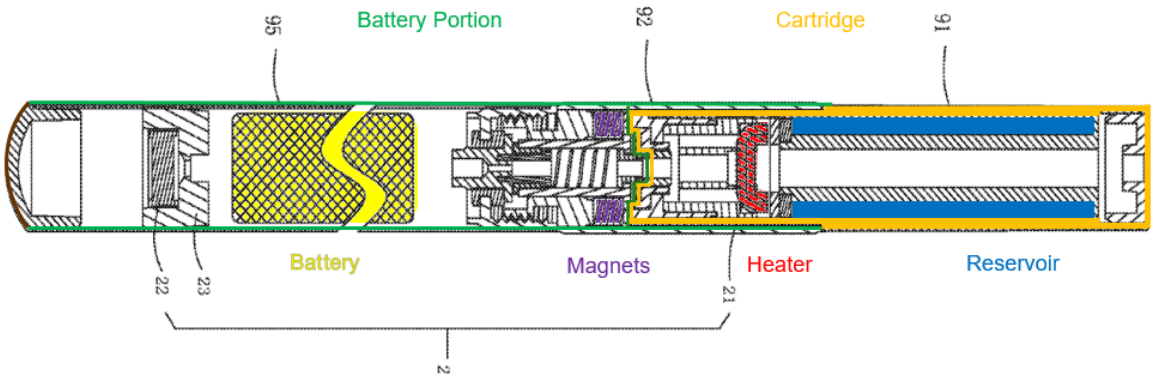

EX1010, Fig. 3

F. Liu438 (EX1013)

70. U.S. Pat. App. Pub. No. 2013/0319438 ("Liu438"), titled "Electronic Cigarette and Its Sucking Rod", was filed on June 5, 2012. I have been informed by counsel that Liu438 is prior art under at least 35 U.S.C. § 102(a)(2) because it was filed before the earliest priority date of the Verleur Patents.

71. Liu438 discloses an electronic cigarette with a sucking rod 90 (i.e., cartomizer) configured to electronically and mechanically connected to a power rod 91, which contains a battery.

> The electronic cigarette sucking rod 90 comprises a sucking cylinder 1, an atomizing device 2, a liquid guiding component 3 including a liquid separation seat 31 and a liquid reservoir 32, a nozzle cover 4, a conduit 5 and a decorative sleeve 6.
>
> ***

NJOY Exhibit 1005.068

> **The power rod 91 comprises a battery 911 and corresponding electrodes**. Before the electronic cigarette works, a little of liquid smoke is infiltrated from the liquid smoke compartment 11 through the liquid guiding component 3 and stored in the fiber element 212. During working, pressing the key (not shown) of the electronic cigarette 100 to conduct it, the heating wire 211 of the atomizing device 2 is conducted and generates heat, so that the liquid smoke stored in the fiber element 212 is heated and atomized into fogged smoke, the fogged smoke in the atomizing chamber 221 enters the conduit 5 through the vent pipe 312 of the liquid guiding component, and then passes by the through hole 41 of the nozzle cover 4 to be inhaled.

EX1013, [0044], [0058].

72. The sucking rod 90 comprises a sucking cylinder 1 to house the components of the sucking rod, including an atomizer device (i.e., heating element) and a compartment for storing liquid smoke. *Id.*, [0045] ("The sucking cylinder 1 is for installing the atomizing device 2, the liquid guiding component 3, the nozzle cover 4 and the conduit 5."), [0046] ("The sucking cylinder 1 is further provided with a liquid smoke compartment 11 therein for storing the liquid smoke…").

73. Liu438 further teaches that the sucking cylinder can be made transparent. The transparency is for observing the amount of liquid smoke within the liquid smoke compartment. *Id.*, [0046] ("The sucking cylinder 1 is a wholly transparent shell or at least partially transparent, or at least a portion thereof where the liquid smoke compartment 11 is configured is transparent to facilitate to observe the amount of the liquid smoke in the liquid smoke compartment 11.").

NJOY Exhibit 1005.069

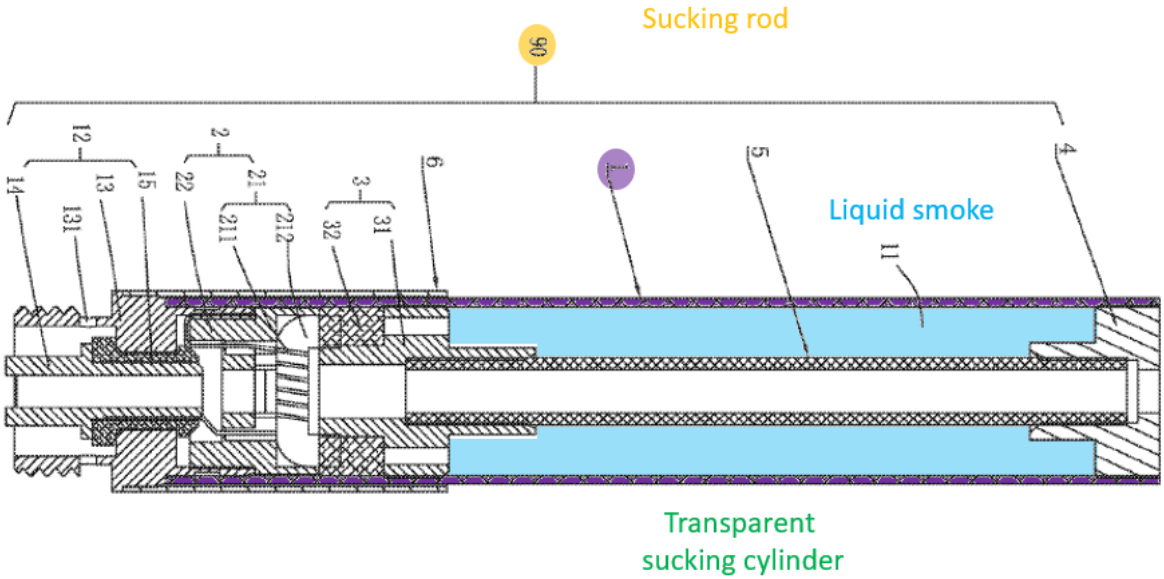

EX1013, Fig. 3

G. Tucker (EX1034)

74. U.S. Pat. Pub. No. 2013/0192623 ("Tucker"), titled "Electronic Cigarette" was filed on January 31, 2013. I have been informed by counsel that Tucker is prior art under at least 35 U.S.C. § 102(a)(2) because it was filed before the earliest priority date of the Verleur Patents.

75. Tucker discloses an electronic cigarette having a replaceable cartridge 70 electrically and mechanically connected a reusable fixture 72 (i.e., battery portion) containing a power supply, such as a rechargeable battery.

> As shown in FIGS. 1, 4, 6, 8, 9 and 13, **a novel electronic cigarette 60 comprises a replaceable cartridge (or first section) 70 and a reusable fixture (or second section) 72, which are coupled together** at a threaded connection 205 or by other convenience such as a snug-fit, detent, clamp and/or clasp. The first section 70 includes an outer

NJOY Exhibit 1005.070

tube 6 (or casing) extending in a longitudinal direction and an inner tube 62 coaxially positioned within the outer tube or casing 6. The second section 72 can also include an outer tube 6 (or casing) extending in a longitudinal direction. In an alternative embodiment, the outer tube 6 can be a single tube housing both the first section 70 and the second section 72 and the entire electronic cigarette 60 can be disposable.

***

In an embodiment, a heater 14 is also contained in the inner tube 62 downstream of and in spaced apart relation to the central air passage 20. The heater 14 can be in the form of a wire coil, a planar body, a ceramic body, a single wire, a cage of resistive wire or any other suitable form. A wick 28 is in communication with the liquid material in the liquid supply reservoir 22 and in communication with the heater 14 such that the wick 28 disposes liquid material in proximate relation to the heater 14. The wick 28 may be constructed of a fibrous and flexible material. The wick 28 preferably comprises at least one filament having a capacity to draw a liquid, more preferably the wick 28 comprises a bundle of filaments which may comprise glass (or ceramic) filaments and most preferably a bundle comprising a group of windings of glass filaments, preferably three of such windings, all which arrangements are capable of drawing liquid via capillary action via interstitial spacings between the filaments. A power supply 1 in the second section 72 is operable to apply voltage across the heater 14. The electronic cigarette 60 also includes at least one air inlet 44 operable to deliver air to the central air passage 20 and/or other portions of the inner tube 62.

***

The battery can be a Lithium-ion battery or one of its variants, for example a Lithium-ion polymer battery. Alternatively, the battery may be a Nickel-metal hydride battery, a Nickel cadmium battery, a Lithium-manganese battery, a Lithium-cobalt battery or a fuel cell. In that case, preferably, the electronic cigarette 60 is usable by a smoker until the energy in the power supply is depleted. Alternatively, the power supply 1 may be rechargeable and include circuitry allowing the battery to be chargeable by an external charging device. In that case, preferably the circuitry, when charged, provides power for a pre-

NJOY Exhibit 1005.071

> determined number of puffs, after which the circuitry must be re-connected to an external charging device.

EX1034, [0033] (emphasis added), [0035], [0052].

76. The cartridge comprises a liquid supply reservoir 22 for storing vaporizable liquid material and a heater 14 for vaporizing the liquid. *Id.*, [0034] ("Moreover, the electronic cigarette 60 includes a liquid supply reservoir 22. The liquid supply comprises a liquid material…"), [0035] ("In an embodiment, a heater 14 is also contained…"), [0044] ("Preferably, the heater 14 heats liquid in the wick 28 by thermal conduction.").

77. Tucker further teaches that the outer shell of the cartridge can include a window to see the remaining liquid in the cartridge.

> In one embodiment, as shown in FIG. 10**, the outer tube 6 can include a clear (transparent) window 71 formed of a transparent material so as to allow a smoker to see the amount of liquid material remaining in the liquid supply reservoir 22**. The clear window 71 can extend at least a portion of the length of the first section 70 and can extend fully or partially about the circumference of the first section 70. In another embodiment, the outer tube 6 can be at least partially formed of a transparent material so as to allow a smoker to see the amount of liquid material remaining in the liquid supply reservoir 22.

Id., [0038] (emphasis added). This window is shown in the annotated Fig. 10 below:

NJOY Exhibit 1005.072

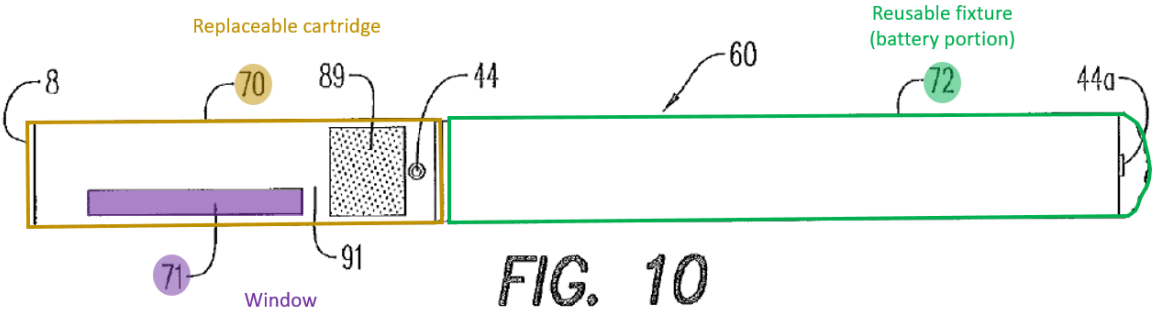

EX1034, Fig. 10

H. Zheng (EX1050)

78. U.S. Patent No. 9,060,548 ("Zheng"), titled "Fast Connector of Electronic Cigarette" was effectively filed on June 20, 2013. I have been informed by counsel that Zheng is prior art under at least 35 U.S.C. § 102(a)(2) because it was filed before the earliest priority date of the Verleur Patents.

79. Zheng discloses a fast connector of an electronic cigarette. EX1050, 1:6-8 ("The present invention relates to a fitting part of an electronic cigarette, and more specifically relates to a fast connector of an electronic cigarette.").

> In view of the aforesaid disadvantages now present in the prior art, the present invention provides a fast connector of an electronic cigarette, wherein an upper end of the fast connector comprises electrical poles on a vaporizer socket, a lower end of the fast connector comprises a battery adaptor plate, and a middle section of the fast connector is fixed with resilient battery columns. The present invention has a simple structure and high production efficiency. The present invention is also easy to manufacture and its manufacturing cost is low.

EX1050, 1:52-61.

NJOY Exhibit 1005.073

80. The fact connector comprises a pair of resilient battery columns 30 which forms two electrical poles.

> A fast connector of electronic cigarette comprising a battery adaptor plate 201 above a battery 10, wherein a top surface of the battery adaptor plate 201 is welded with a pair of resilient battery columns 30 to form two electrical poles at a lower end of the fast connector; a bottom surface of the battery adaptor plate 201 is welded with a 2 pin socket 202; the 2 pin socket 202 and the battery 10 are connected to achieve conduction, and the 2 pin socket 202 is connected to the resilient battery columns 30 via the battery adaptor plate 201; upper ends of the resilient battery columns 30 support against a vaporizer Socket 40; a pair of electrode columns 401 and a heating wire 403 are fixed on the vaporizer socket 40; two ends of the heating wire 403 are welded and conducted with the electrode columns 401 via conduction wires 402

EX1050, 1:63-2:11.

NJOY Exhibit 1005.074

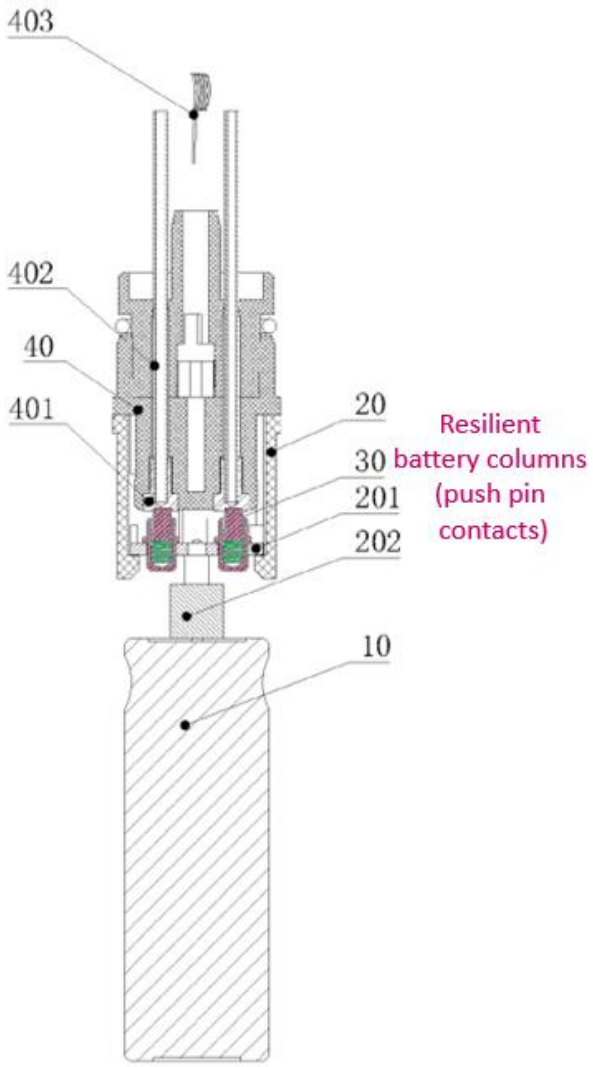

FIG.1

EX1050, Fig. 1

81. The battery columns 30 each comprises: "a bottom shell 301 disposed with a hollow cavity whose opening faces upwardly; a spring 302 inside the hollow cavity; and a movable probing head 303 disposed at the opening of the hollow cavity." EX1050, 2:15-20.

NJOY Exhibit 1005.075

EX1050, Fig. 2

82. Zheng teaches that its invention provides numerous benefits:

> The present invention has a simple structure. Sophisticated metal structural parts are not required. Therefore, cost of the present invention is only half the cost of an existing metal connector. Also, welding of the resilient battery columns on the battery adaptor plate can be achieved by automated manufacturing technique, thereby lowering the manufacturing cost significantly and improving efficiency which is 10 times more efficient than manual welding.

EX1050, 3:25-32.

VII. Claim Construction

83. I understand that the words of the claims of a patent are generally given the ordinary and customary meaning as interpreted by a person of ordinary skill in the art at the time of invention. I have been informed that patent claims are construed in light of the claim language, the specification (including the drawings), and the

NJOY Exhibit 1005.076

prosecution history (including the references cited during the prosecution of the patent).

84. I further understand that the parties to the above-captioned IPRs have exchanged proposed constructions for the terms "wicking element," "heating element," and "window" in the related Section 337 Investigation. EX1049.[1]

A. "wicking element" ('722 Patent claims 1, 10, 15; '981 Patent claims 1, 9, 13)

85. I understand that, in the related ITC Investigation, Patent Owner contends that the term "wicking element" should be given its plain and ordinary meaning, which it contends is "any material through which liquid may be drawn via capillary action." EX1049.003. I also understand that Petitioner has adopted this construction only for the purpose of this Petition. I have applied this construction in my analysis below.

B. "heating element" ('722 Patent claims 1, 10, 15; '981 Patent claims 1, 9, 13, 17)

86. I understand that, in the related ITC Investigation, Patent Owner contends that the term "heating element" should be given its plain and ordinary meaning, which it contends is "conductive material shaped into a wire, coil, or flat

[1] I understand that, in the related Section 337 Investigation, Patent Owner proposed that the term "mouthpiece," in relation with another patent, should be construed to have its "[p]lain an ordinary meaning, *e.g.*, portion to be used by a mouth." EX1049.002.

NJOY Exhibit 1005.077

ribbon that generates heat in response to current." EX1049.003. I also understand that Petitioner has adopted this construction only for the purpose of this Petition. I have applied this construction in my analysis below.

C. "window" ('722 Patent claims 14, 17; '981 Patent claims 9, 17)

87. I understand that, in the related ITC Investigation, all parties agree that the term "window" should be construed as an "opening or slit [on or proximate to] / [in] the shell through which the cartomizer is viewed." EX1049.004; '981 Patent, 8:10-19. For the '722 patent, the window must be "on or proximate to" the shell. For the '981 Patent, the window must be "in" the shell. I have applied these constructions in my analysis below.

VIII. The '722 Patent

A. The Claims

88. I understand that the petition challenges claims 1, 5, 7, and 9-21 of the '722 patent. Independent claim 1 of the '722 patent is directed to an e-cigarette comprising a cartomizer configured to connect with a battery portion, wherein the battery portion includes a chamber for receiving the cartomizer and charging contacts at one end of the battery portion, the cartomizer comprises a structure for holding a vaporizable liquid, a heating element for vaporizing the liquid, and a wicking element for transporting the liquid to the heating element, and the entire heating element being disposed within the chamber when the cartomizer is inserted.

NJOY Exhibit 1005.078

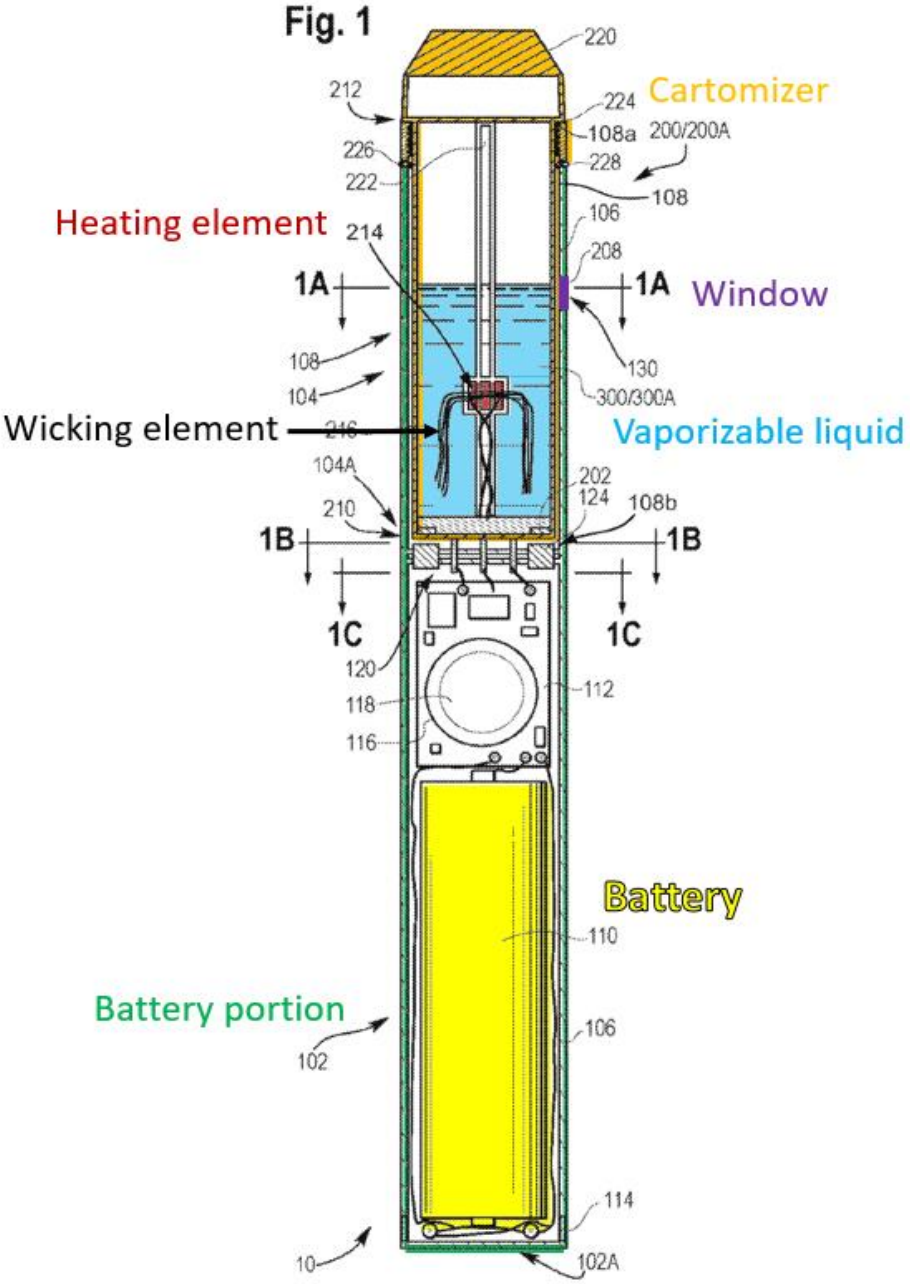

’722 Patent, Fig. 1

89. As I explain in this Declaration, a POSITA, in and prior to 2013, would have understood that there was nothing inventive about this system, which was well known in the art at the time. Claim 1 is reproduced below:

> 1. A vaporizer comprising:
>
> a battery portion comprising a battery housing segment and a cartomizer receiving segment, the cartomizer receiving segment defining a chamber having an insertion end distal from the battery housing segment and a base end proximate to the battery housing segment, the battery portion further comprising a plurality of charger electrical contacts to provide electrical charge to a battery housed in the battery housing segment, the charger electrical contacts disposed at a first end of the battery portion opposite the insertion end of the chamber of the cartomizer receiving segment, wherein an outer shell is commonly shared by the battery housing segment and the cartomizer receiving segment; and
>
> a cartomizer insertable into the chamber at the insertion end, the cartomizer comprising:
>
> a body including a structure configured to hold a vaporizable liquid;
>
> a wicking element provided within the body and at least partially in contact with the vaporizable liquid; and
>
> a heating element provided within the body in contact with the wicking element and operable to heat the vaporizable liquid, wherein the wicking element is configured to deliver the vaporizable liquid to the heating element, and wherein the entire heating element is disposed between the insertion end of the chamber and the base end of the chamber when the cartomizer is inserted into the chamber such that the outer shell protects the heating element.

B. Prosecution History

90. I have been informed by Counsel that the application that resulted in the ’722 Patent, U.S. Patent Application No. 16/119,359, was filed on August 31,

NJOY Exhibit 1005.080

2018 by Verleur Products LLC ("the Applicant"). I understand that during prosecution, the Applicant made certain amendments, remarks, and additions to the claims, which are summarized below.

91. On January 11, 2019, the Examiner issued a rejection, rejecting all pending claims, claims 1-2, as being anticipated and rendered obvious by Liu783. '722 Patent File History, .094-096. Subsequently, the applicant amended claims 1-2 to further require "a plurality of charger electrical contacts…disposed at a first end of the battery portion opposite the insertion end of the chamber[.]" *Id.*, .215. In the Applicant's remarks, the Applicant argued that Liu783 does not disclose the newly added "a plurality of charger electrical contacts" limitation. *Id.*, .225. Applicant also added claims 3-20, which eventually became issued claims 3-21. *Id.*, .216-218.

92. On August 8, 2019, the Examiner again rejected all claims as being rendered obvious by various combinations of U.S. Patent Publications 2015/0157055 ("Lord") (disclosing a vaporizer comprising a battery segment and a cartomizer receiving segment having a chamber), 2014/0096781 ("Sear") (disclosing a vaporizer comprising a battery segment and a cartomizer receiving segment having a chamber with an opening at an insertion end distal to the battery segment), 2013/0042865 ("Monsees") (disclosing a vaporizer having a plurality of charger electric contacts disposed at a distal end of the device), 2011/0036346 ("Cohen") (disclosing a vaporizer comprising a battery portion having a window

NJOY Exhibit 1005.081

allowing viewing of the cartomizer), and Liu783 (disclosing magnetic connection between a cartomizer and a battery portion). ’722 Patent File History, .235-244.

93. In response to the rejection, the Applicant amended all then-pending independent claims to require the “entire heating element [be] disposed between the insertion end…and the base end of the chamber[,]” and argued that “Lord, Sears, and Monsees…fail to teach or suggest” the new limitation. ’722 Patent File History, .314; *id*, .319-321. Applicant did not argue that Liu783 failed to teach magnetically connecting the cartomizer with the battery portion, or that Cohen failed to teach a window on the battery portion. *See id.*, .319-.322.

94. On March 5, 2020, the Examiner rejected all claims as being anticipated by U.S. Patent Publication 2013/0037041 (“Worm”), or rendered obvious by the combinations of Worm and Cohen and/or Liu783. ’722 Patent File History, .363-.372. In response, the Applicant amended the claims to require the recited vaporizable substance to be a liquid. *Id.*, .386; *see also id.*, .381 (“Worm fails to disclose or suggest a body including a structure to hold a vaporizable liquid…”).

95. On September 11, 2020, the Examiner rejected then-pending claims under nonstatutory double patenting. ’722 Patent File History, .394-395 To overcome the rejection, the applicant filed a terminal disclaimer. *Id.*, 419. On December 30, 2020, the Examiner issued Notice of Allowance, stating that the

NJOY Exhibit 1005.082

closest prior art reference, Worm, fails to disclose a vaporizable substance that is liquid. *Id.*, .439. The ’722 Patent then issued on September 15, 2021.

C. Ground 1: Pan in view of Levin

96. It is my opinion that the combination of Pan and Levin renders obvious claims 1, 5, 7, 9-13, 15-16, and 18-21 of the ’722 Patent under 35 U.S.C. § 103. As explained below, Pan discloses every limitation of these claims except for (1) electric charger contacts on one end of the battery portion and (2) magnetic coupling between its inhaler portion and the atomizer portion. Levin discloses these missing limitations and a POSA would have found it obvious to combine Pan and Levin.

1. Motivation to Combine

a. <u>USB Charging</u>

97. Pan discloses that its e-cigarette device may use rechargeable batteries as its power source. EX1024, 2:32-35 (“The electric power source, which can be a rechargeable or non-rechargeable battery…”), 5:47-48 (“The electric power source 5 may be a battery of rechargeable or non-rechargeable type.”). While Pan does not disclose charger contacts on the battery portion, it is my opinion that a POSA would have been motivated to combine Pan with Levin to incorporate Levin’s USB charger contacts to recharge the rechargeable batteries with a reasonable expectation of success.

98. Levin teaches an electronic vaporizing device having a micro-USB charging port at a distal end of the battery portion for recharging its battery. EX1003,

1:14-15 ("The present invention generally relates to an electronic vaporizing device…"),

> The present invention generally relates to an electronic vaporizing device…
>
> ***
>
> In certain embodiments, such as shown in FIGS. 14A-14C, **the device includes a port 31 to recharge the power source 30, such as a micro-USB charging port** located on a printed circuit board behind a distal lens tip or endcap. The port may be used to recharge non-removable batteries by connecting a recharging cable 70, such as a USB cable, to the port, which may utilize a wall charging adapter or cigarette lighter adapter in an automobile. In an example embodiment, the device includes two 3.7 V lithium ion batteries placed in series, which are charged by electrically coupling the batteries to an external wall supply with a current of about 1.5 A to 1.8 A. Generally, the maximum charging current drawn is 1.8 A and a completely discharged device may take from 1 to 2 hours to fully charge. As shown in FIGS. 14A-14C, **the device may include a recharging port 31 for connecting with a USB cord 70 for recharging of the rechargeable power source 30, as described above**.
>
> ***
>
> In certain embodiments, the device includes a power source using one or more batteries, **such as rechargeable and/or replaceable batteries**, such as 18650 high discharge lithium ion batteries. Generally, **the device includes two rechargeable batteries placed in series within the main body, which can be recharged by attaching the device to a power source with a power cord, such as a connector pin or USB device**.
>
> ***
>
> In certain embodiments, the distal end also includes a recharging port 31, such as in a USB connector 31 or a pin receptacle as shown in FIGS. 6A-6D, so as **to facilitate recharging of the power source therein**.

NJOY Exhibit 1005.084

EX1003, 1:14-15, 14:10-26 (emphasis added), 8:66-9:6 (emphasis added), 23:58-62 (emphasis added).

99. In my opinion, a POSA would have understood that Levin's micro-USB charging port referred to the standardized micro-USB specification at the time (rev. 1.01 April 2007). A POSA would have been familiar with this standard and therefore would have understood that Levin's micro-USB port comprises the recited "a plurality of charger electrical contacts." EX1011.010; EX1011.026-.027 (showing that a micro-USB receptacle has five electrical contacts). More specifically, a POSA would have understood that, as shown in the 2007 USB specifications, a standard micro-USB port at the time of Levin comprises five linearly arranged pins, which are electrical contacts. Two of these five contacts – the VBUS and the GND pins – are used for transmitting power and recharging. EX1011.010.

NJOY Exhibit 1005.085

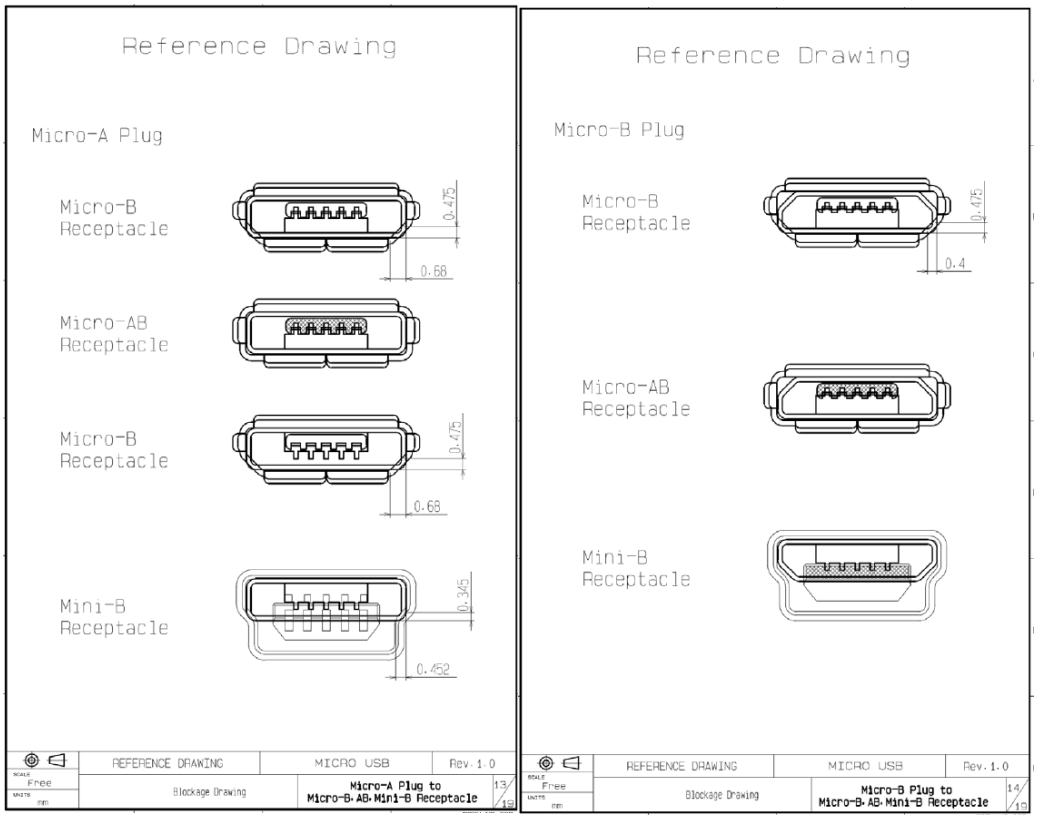

EX1011.026-027, Figs. 4-13, 14

100. Moreover, Levin teaches that its charging port 31 is located at a distal end of it's the battery portion of its device. EX1003, 23:58-60 ("In certain embodiments, the distal end also includes a recharging port 31, such as in a USB connector 31…").

NJOY Exhibit 1005.086

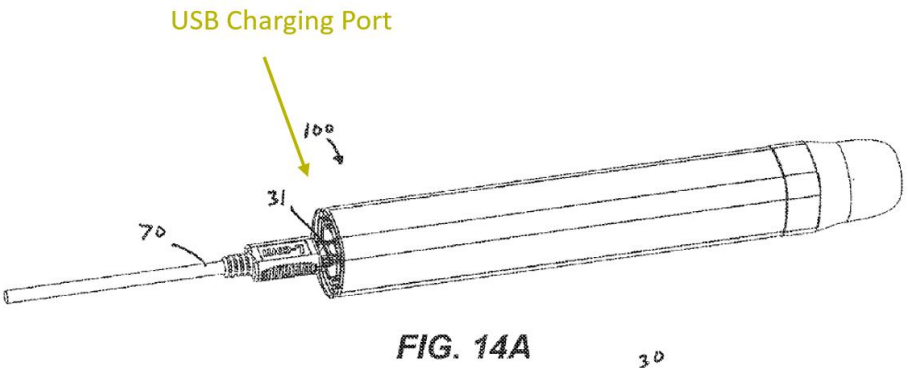

EX1003, Fig. 14A

101. Consistent with Levin's teaching, a POSA would have been motivated to incorporate Levin's micro-USB charger port into Pan's inhaler at a distal end opposite the insertion end for several reasons. First, Pan discloses that its battery is rechargeable, but does not disclose the existence or location of the contacts for charging its battery. In my opinion, a POSA would have found it ideal to include charger contacts on the exterior of the vaporizer such that adult consumers can recharge the device without removing the battery. *See* EX1027, 6:51-55 ("The rechargeable battery (3) may be charged without frequent change of battery. The user just needs to plug the cigarette bottle assembly into the open end of the shell (a), for easy use and very easy change."). This also allows an adult consumer to use the device while charging which is a commonly sought-after benefit. EX1056, [0003] ("The technical problem to be solved by the utility model is to provide an

NJOY Exhibit 1005.087

electronic smoking device capable of charging and heating flue-cured tobacco at the same time, aiming at the above-mentioned defects of the prior art.”).

102. Second, it is my opinion that a POSA would have been motivated to incorporate Levin’s charger contacts such that they are placed at the distal end of the Pan’s device. Such a design is ergonomically preferred because the adult consumer may grip the device in one hand along the longitudinal axis and insert the charger cable with ease. Placing the charging port along the length of the device would make it more difficult for an adult consumer to insert the charger cable because of resulted torque on the device during insertion. Take a mobile phone, for instance. Mobile phones almost universally have the charger port at the bottom of the phone. This provides the most stable location for inserting the charging cable because the user is able to comfortably grip the phone along the narrower part of the phone while plugging in the charging cable. Further, this arrangement could facilitate use of the device while charging, allowing an extra degree of flexibility and convenience for the consumer.

103. Third, micro-USB connections have long been standardized and a POSA would have been motivated to use widely-adopted charger contacts rather than developing proprietary charger contacts because it provides convenience to adult consumers, and maximizes consumer product safety. For example, as Levin teaches, a micro-USB connecter can be used with “a wall charging adapter or

NJOY Exhibit 1005.088

cigarette lighter adapter in an automobile." EX1003, 14:13-17 ("The port may be used to recharge non-removable batteries by connecting a recharging cable 70, such as a USB cable, to the port, which may utilize a wall charging adapter or cigarette lighter adapter in an automobile."). Further, a consumer can use the same USB cable for multiple devices. This makes it possible to easily borrow one from another person in the event that a consumer wishes to charge the device while away from their own cable.

104. Fourth, a POSA would have been motivated to use a USB port because in addition to charging, USB ports enable data transmission, opening up possibilities for additional features.

> A USB interface connector 42 is disposed at the tip end of the battery assembly 12, which **services two functions**. First, it provides an interface for connecting USB power from another source to charge the internal battery 30 of the battery assembly 12. **Second, it provides an additional serial interface to an external computing device, such as a personal computer, to support all the functions that are available using the Bluetooth interface 44**. The battery charging function is managed by a conventional battery charging circuit 32.

EX1041, 6:23-32 (emphasis added); *see also* EX1042, 3:7-13 (The USB connector is adapted to deliver firmware updates and to provide real-time monitoring by a program installed on a computer. The computer connectivity is a Micro-BUSB connector exposed in the side of the main the housing. It is comprised of metal so as to serve as a complete pathway of current flow from the power source to atomizer and electronic control unit.").

NJOY Exhibit 1005.089

105. In my opinion, a POSA would have had a reasonable expectation of incorporating a micro-USB receptacle at the distal end of Pan's device. As I have explained, Micro-USB receptacles had been standardized and well-known in the art. Also, prior art e-vapor devices specifically disclose using USB receptacles. *See, e.g.*, EX1026; EX1027; EX1003. Moreover, Levin's micro-USB charger contacts are installed at its end cap. EX1003, 23:20-22 ("[T]he distal end includes the distal end cap 38…and an optional recharging connector or port[.]"), *Id.*, 13:59-61 ("In certain embodiments, the distal lens tip is non-removable and includes a central port which acts as both an air intake and a recharging port…"). Pan likewise has an end cap 13. EX1024, 5:9-11 ("The electronic inhaler includes…cigarette cap 13 with small holes for air inflow…"). Therefore, a POSA would have had a reasonable expectation that Levin's micro-USB charger receptacle would work equally well when placed at Pan's end cap.

NJOY Exhibit 1005.090

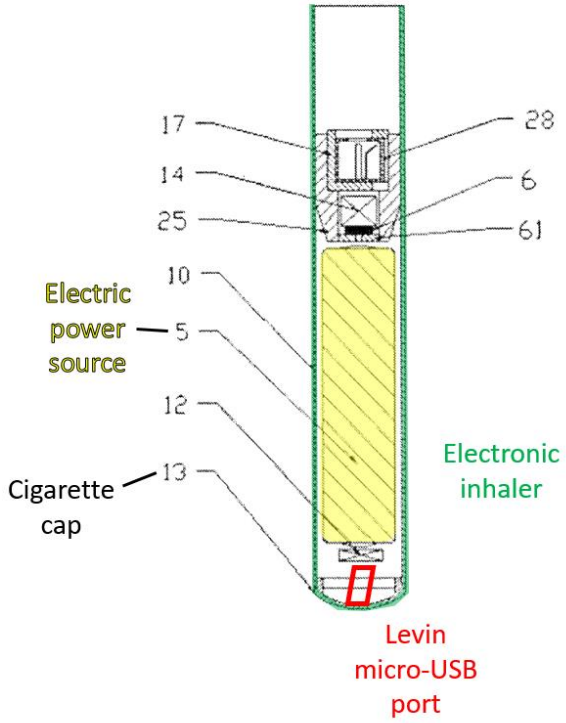

EX1010, Fig. 5

b. <u>Magnetic Coupling</u>

106. As of the priority date of the ’722 Patent, e-vapor devices with a cartridge configured for magnetic coupling to a battery had been well known in the prior art. *See e.g.*, EX1025, [0003] (“[A]n electronic cigarette with magnetic connection which makes assembly of the electronic cigarette convenient and quick.”); EX1026, 6:15-23 (“[A]n aerosol delivery device…compris[ing] a control body 102 and a cartridge 104 that can be…detachably aligned [via]…magnetic engagement”).

NJOY Exhibit 1005.091

107. For example, Levin discloses an e-cigarette with mouthpiece detachable from its power source, in which a portion of the mouthpiece is referred to as the proximal grinder portion and a portion of the power source referred to as a distal grinder portion.

> In an example embodiment, such as shown in FIGS. 1A-1B, the device includes a main body 2 having a main body housing 20 that encases the internal components, such as the power source (e.g. batteries), a USB receptacle for recharging, a distal light Source or LED, the heating unit, and at least a portion of a grinding chamber (the remaining portion often being attached to a removable portion or to a proximal portion having a mouthpiece).
>
> ***
>
> Generally, and as shown in the embodiment of FIGS. 9A-9B, the device includes a grinder 40 comprising a separable distal grinder portion 42 and proximal grinder portion 44, the distal portion 42 being disposed on a proximal end of the main body 2, and the proximal grinder portion 44 being disposed on the distal end of a proximal portion having a mouthpiece portion 1.

EX1003, 10:31-38, 19:35-41.

108. As shown in the annotated figure below, four magnets located at the periphery of each grinder portion magnetically couple with each other; thus attaching the mouthpiece to the power source.

> In certain embodiments, the magnets 5 are used at inter facing portions of the distal grinding portion 42 and the proximal grinding portion 44, as shown in FIGS. 9A-9B, where the grinder portions come together. In this embodiment, there are four magnets 5 situated at each corner of each of the proximal and distal grinder portions.

EX1003, 20:48-53.

NJOY Exhibit 1005.092

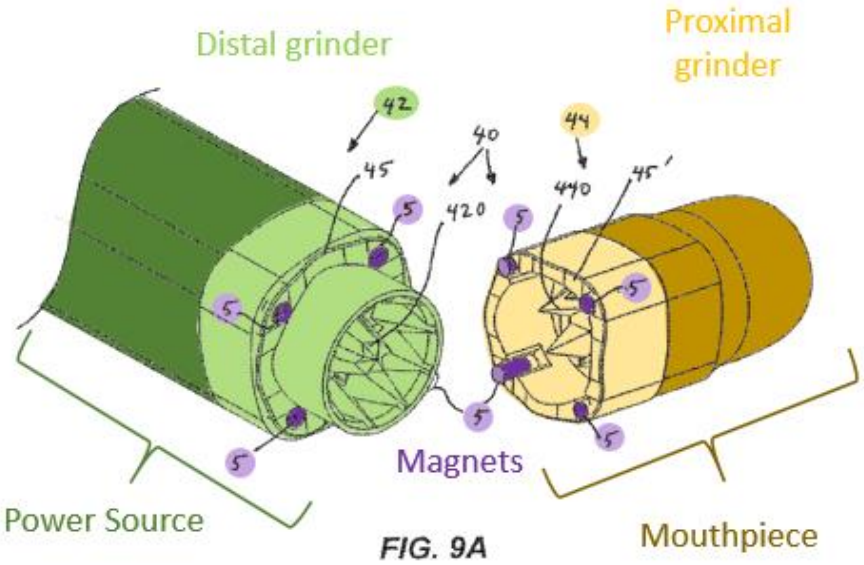

EX1003, Fig. 9A

109. It is my opinion that a POSA would have been motivated to incorporate Levin's one or more magnets into Pan's electronic cigarette to enable magnetic coupling between Pan's electronic inhaler (i.e., battery portion) and the electronic atomizer (i.e., cartomizer). For example, a POSA would have been motivated to incorporate one or more magnets on or proximate to the surfaces of Pan's electronic inhaler and cartomizer that contact with each other, such that each magnet is configured to couple with a corresponding magnet on the opposite side. The annotated figure below shows one such exemplary configuration:

NJOY Exhibit 1005.093

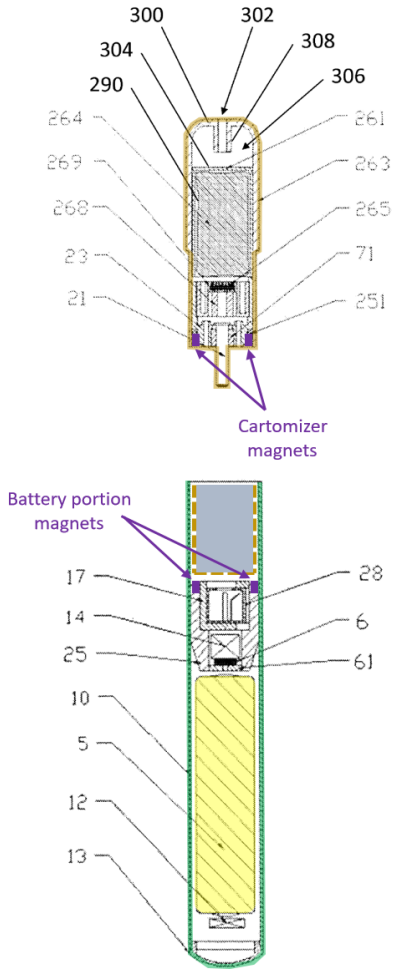

110. In my opinion, there are several reasons that a POSA would have been motivated to incorporate a magnetic connection between Pan's electronic inhaler and cartomizer. First, magnetic coupling is simply easier and faster than threaded coupling. *See e.g.*, EX1025, [0003] ("An object of the present invention is to provide an electronic cigarette with magnetic connection which makes assembly of the electronic cigarette convenient and quick."). For example, manually screwing components together requires manual dexterity and strength on the part of the

NJOY Exhibit 1005.094

consumer. A person with poor grip strength might have difficulty assembling or disassembling a threaded e-cigarette. Magnetic coupling requires simply dropping the cartridge into the insertion end. Additionally, screw threads are prone to damage through cyclic fatigue and over-torqueing, whereas magnetic connections are not. In particular, it is very common to overtighten a threaded connection. That can lead to stripping the threads or causing the cartomizer to "stick" in the threaded connection. Moreover, magnetic coupling is more reliable than friction fit designs which require precise and tight tolerances. If the components of a friction fit design are not aligned perfectly, the cartomizer can jam during insertion into the battery portion. This could cause the consumer to force the cartridge into the receptacle or grow frustrated trying to find just the right angle to insert the cartridge. Friction fits also pose other challenges including the risk of interference, which may occur with environmental changes (e.g., heat, humidity, etc.).

111. Second, a POSA would have been motivated to use magnetic coupling because of the self-aligning nature of magnetic connections. *See*, e.g., EX1026, 6:15-23 (disclosing "an aerosol delivery device…compris[ing] a control body 102 and a cartridge 104 that can be…detachably aligned [via]…magnetic engagement"). In contrast, screw couplings require manual alignment and an exact number of turns to ensure connection. An adult consumer may, for instance, under or overtighten the components during coupling. EX1043, 22:63-66 ("[U]se of a threaded connection,

NJOY Exhibit 1005.095

as may be employed in other embodiments of aerosol delivery devices, may require unthreading the cartridge from the control body, which may take more time, and the strength required to decouple the cartridge from the control body[.]"). Magnetic connections have no such concerns.

112. In my opinion, a POSA would have reasonably expected to successfully add magnets to Pan's vaporizer because it would have been routine and a trivial modification for a POSA to combine Levin's magnets with Pan. Specifically, a POSA would have known that Pan's device, modified with Levin's magnets, would be a functional device because both Pan and Levin are directed to two-part electronic cigarettes. Moreover, as I explained above, magnetic coupling in electronic vapor devices was well-known.

2. Claim 1

a. <u>[1.A] A vaporizer comprising:</u>

113. It is my opinion that Pan discloses this limitation.

114. Pan discloses an electronic vapor cigarette "comprised of two parts, one being an electronic inhaler and the other being an integrated electronic atomizer" wherein the atomizer vaporizes liquid. EX1024, 2:26-28. Pan also discloses that "[t]he inhaler preferably includes one or more of an electric power source…which can be a rechargeable or non-rechargeable battery, [that] supplies electricity to the atomizer to vaporize a liquid inside an atomizer chamber." EX1024, 2:30-35.

NJOY Exhibit 1005.096

b. **[1.B] a battery portion comprising a battery housing segment and a cartomizer receiving segment,**

115. It is my opinion that Pan discloses this limitation.

116. Pan discloses that its electronic cigarette comprises two pieces: (1) an electronic inhaler and (2) an integrated electronic atomizer. EX1024, 2:25-28; [1.A]. The electronic inhaler includes an electric power source, which can be "a rechargeable or non-rechargeable battery." EX1024, 2:33, 5:29-49. Figure 5 depicts the inhaler having tube 10 and electric power source 5. The electronic inhaler is the recited "battery portion," and the portion of the inhaler housing the battery is the "battery housing segment." The portion of electronic inhaler receiving electronic atomizer 22 is the cartomizer receiving segment. EX1024, 6:4-9 ("The electronic inhaler and the integrated electronic atomizer are fit together through their connectors of the same type to form the electronic cigarette. The connection is done through the first electric connector socket 28 of the electronic inhaler and the second electric connector plug 21 of the integrated electronic atomizer.").

NJOY Exhibit 1005.097

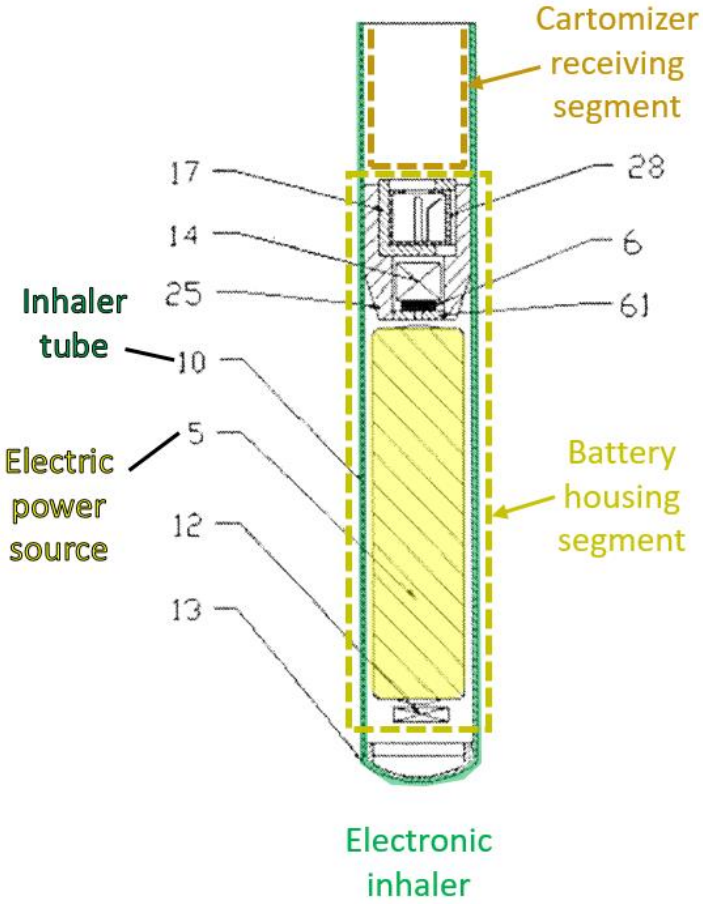

EX1024, Figs. 5 (annotated)

117. Pan's electronic atomizer, shown for example in Figure 3, is a "cartomizer" at least because it comprises both a cartridge having liquid container 261 and an atomizer having electric heating wire 265. EX1024, 4:65-5:4 ("The electronic atomizer includes…heat equalizer 269 twined with an electric heating wire 265, liquid container 261 inside which liquid-storing media 264 being filled with liquids is inserted…"). Moreover, Pan's integrated atomizer is releasably engaged with the inhaler and is replaceable. *See* EX1024, 3:6-8 ("The integrated

NJOY Exhibit 1005.098

atomizer of the present invention is an integrated and disposable part"), 6:1-28. Figure 7 depicts the cartomizer inserted into the cartomizer receiving segment of the battery portion.

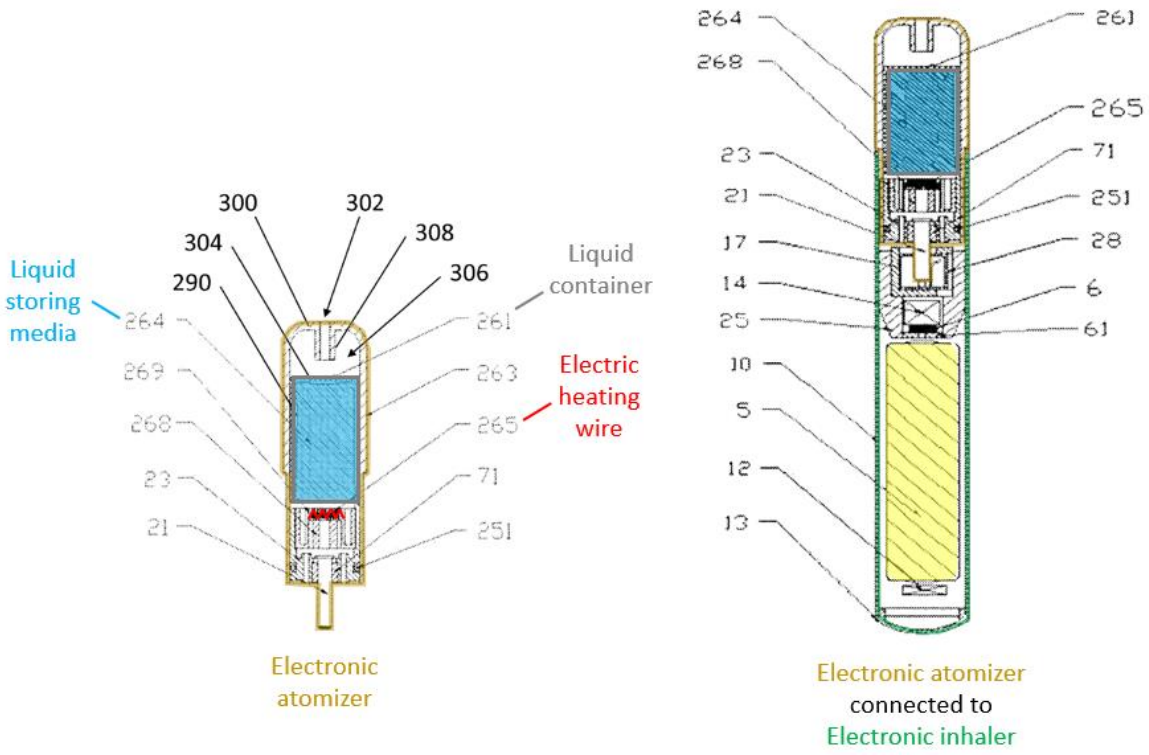

EX1024, Figs. 3, 7 (annotated)

c. <u>[1.C] the cartomizer receiving segment defining a chamber having an insertion end distal from the battery housing segment and a base end proximate to the battery housing segment,</u>

118. It is my opinion that Pan discloses this limitation.

119. As I explained with respect to limitation [1.B], Pan discloses an inhaler having a cartomizer receiving segment. As shown in the annotated figure below, the

NJOY Exhibit 1005.099

cartomizer receiving segment defines a chamber having an insertion end distal from the battery housing segment and a base end proximate to the battery housing segment.

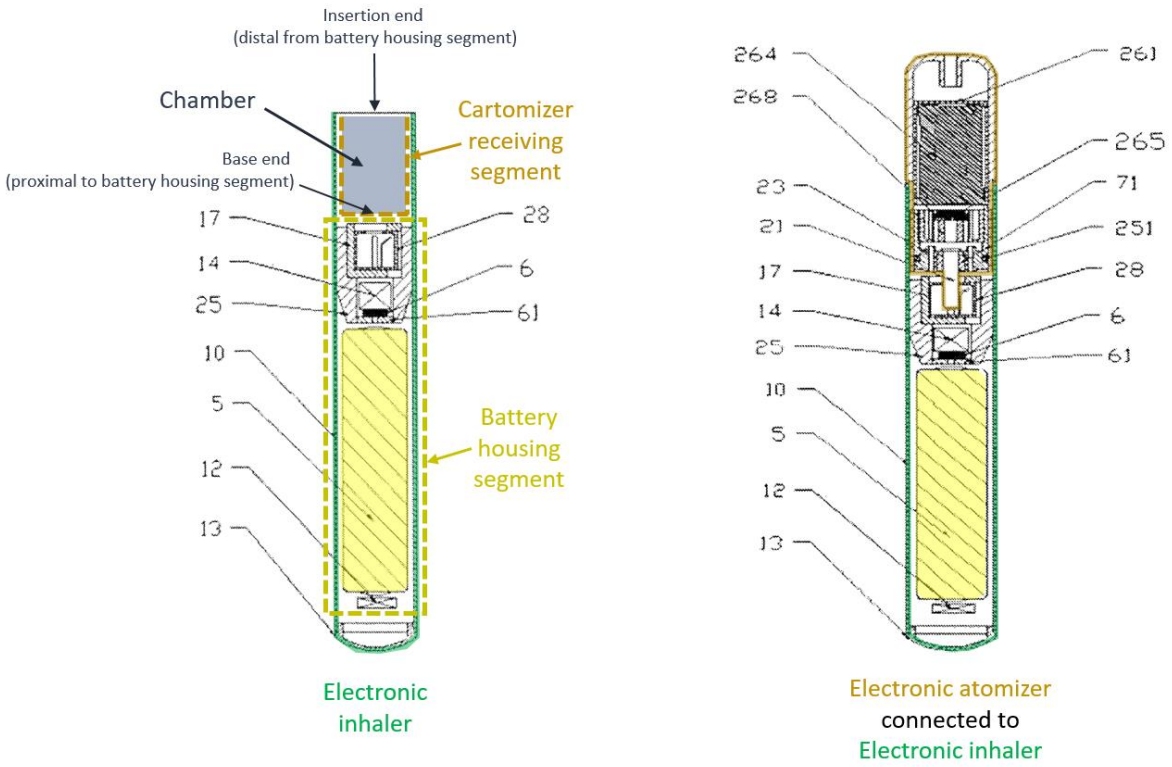

EX1024, Figs. 5, 7 (annotated)

d. <u>[1.D] the battery portion further comprising a plurality of charger electrical contacts to provide electrical charge to a battery housed in the battery housing segment, the charger electrical contacts disposed at a first end of the battery portion opposite the insertion end of the chamber of the cartomizer receiving segment,</u>

120. It is my opinion that Pan and Levin in combination renders obvious this limitation.

NJOY Exhibit 1005.100

121. While Pan discloses that its inhaler may comprise a rechargeable battery, it does not disclose charger electrical contacts for recharging its battery. EX1024, 2:30-35, 5:29-49. As I explained in the motivation to combine section, above, Levin discloses an electronic vaporizer device comprising a micro-USB charging port having a plurality of electrical contacts to provide electrical charge to a rechargeable battery in its housing. *See* Section VIII.C.1.a. Also, Levin's charging port is disposed at a distal end of its vaporizing device.

122. A POSA would have found it obvious for the same reasons I discussed above in Section VIII.C.1.a to adapt Pan to include Levin's micro-USB charging port at the distal end of Pan's device opposite the insertion end of the chamber of the cartomizer receiving segment. For example, it would have been obvious to modify Pan in view of Levin to include a micro-USB charging port as shown in the figure below.

NJOY Exhibit 1005.101

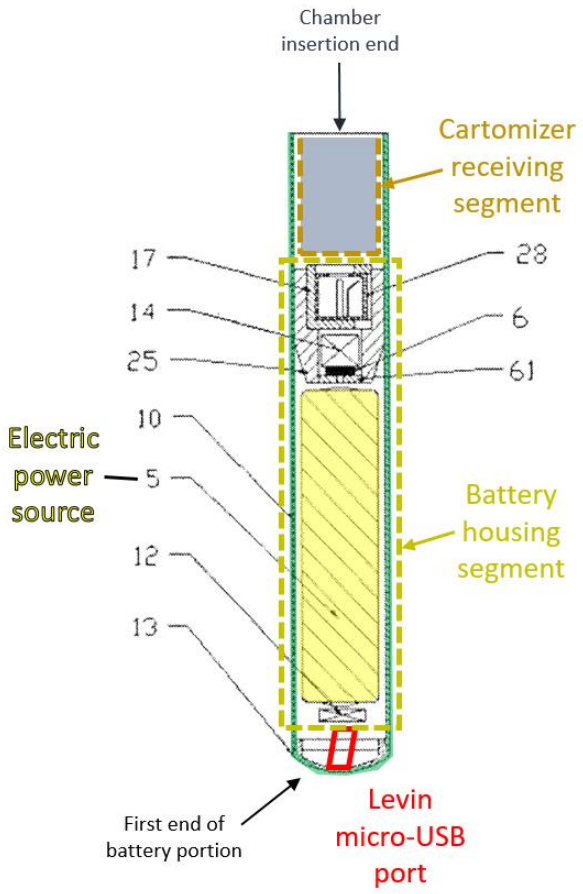

EX1024, Fig. 5

e. <u>[1.E] wherein an outer shell is commonly shared by the battery housing segment and the cartomizer receiving segment; and</u>

123. It is my opinion that Pan discloses this limitation.

124. Pan discloses that its electronic inhaler has an outer shell formed by an inhaler tube 10 and cigarette cap 13. EX1024, 5:9-10 ("The electronic inhaler includes an inhaler tube 10, cigarette cap 13…"); *see also* EX1024, Fig. 5. The outer shell contains the battery housing segment and the cartomizer receiving segment into which the electronic atomizer 22 is inserted. *See* Fig. 7. As shown in the figure

below, the outer shell of Pan's electronic inhaler is commonly shared by the battery housing segment and the cartomizer receiving segment.

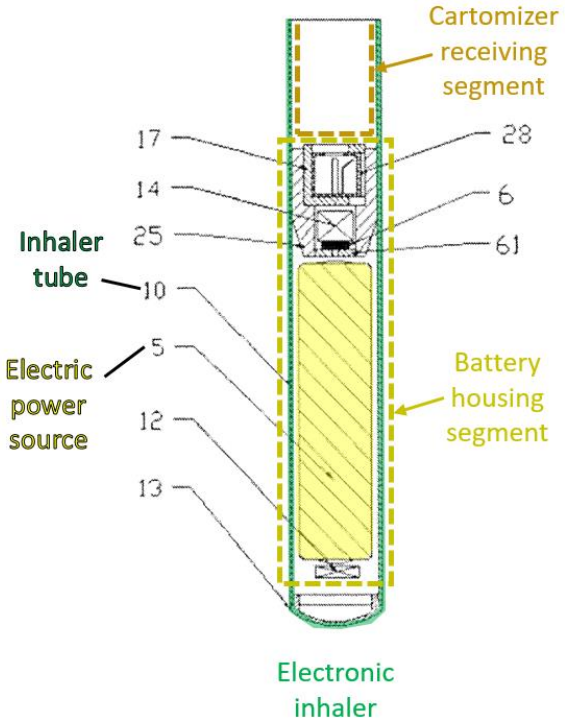

EX1024, Fig. 5

f. <u>[1.F] a cartomizer insertable into the chamber at the insertion end, the cartomizer comprising:</u>

125. It is my opinion that Pan discloses this limitation.

126. Pan discloses an electronic atomizer 22 (i.e., cartomizer) that is insertable into the chamber at the insertion end of its electronic inhaler as shown below. *See* [1.B], [1.C]. *See* EX1024, 2:48-50 ("In a preferred embodiment, the connection between the electronic inhaler and electronic atomizer through the connectors on both parts forms an entire electronic cigarette."); 6:4-9 ("The

NJOY Exhibit 1005.103

electronic inhaler and the integrated electronic atomizer are fit together through their connectors of the same type to form the electronic cigarette. The connection is done through the first electric connector socket 28 of the electronic inhaler and the second electric connector plug 21 of the integrated electronic atomizer.”).

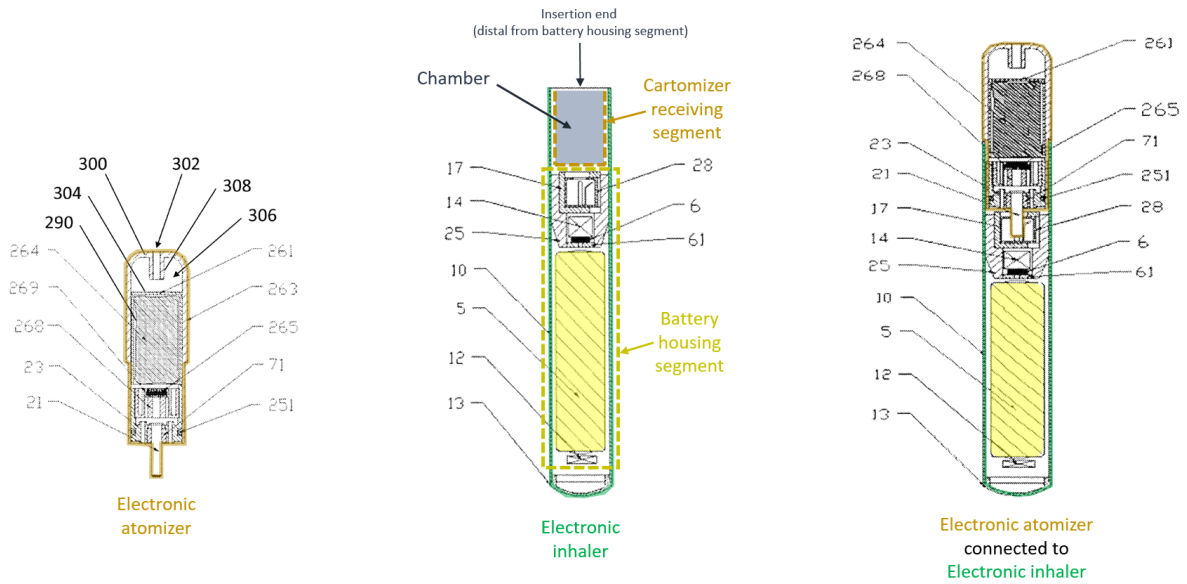

EX1024, Figs. 3, 5, 7

g. <u>[1.G] a body including a structure configured to hold a vaporizable liquid;</u>

127. It is my opinion that Pan discloses this limitation.

128. Pan discloses an electronic atomizer housing (i.e., a body) that comprises a “liquid container 261 inside which liquid-storing media 264 being filled with liquids is inserted.” EX1024, 4:44-47. The liquid container 261 is the recited structure configured to hold a vaporizable liquid. EX1024, 2:32-35 (“The electric power source, which can be a rechargeable or non-rechargeable battery, supplies electricity to the atomizer to vaporize a liquid inside an atomizer chamber.”), 4:15-

NJOY Exhibit 1005.104

18 ("…generate an electric current form the electric power source 5 to the electronic atomizer 22 for vaporizing of a liquid inside the liquid chamber inside the atomizer 22.").

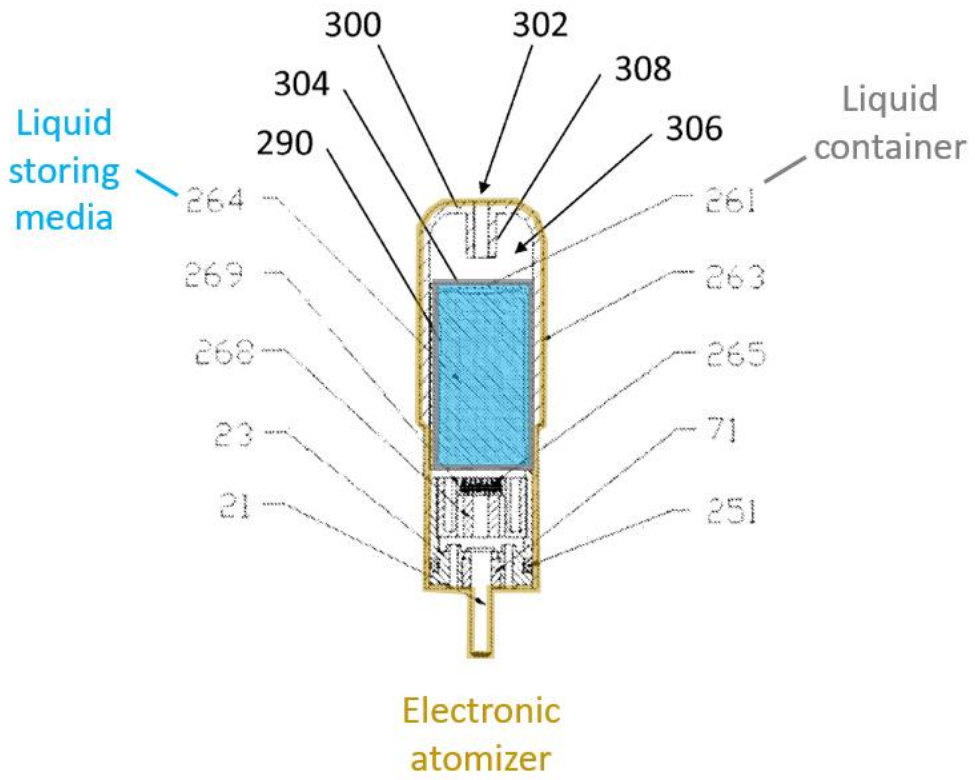

EX1024, Fig. 3

h. <u>[1.H] a wicking element provided within the body and at least partially in contact with the vaporizable liquid; and</u>

129. It is my opinion that Pan discloses this limitation.

130. Pan discloses that the body of electronic atomizer 22 includes a heat equalizer 269 which is the recited "wicking element." Pan discloses that the heat equalizer is made of fiber material and absorbs liquid from the liquid-container.

EX1024, 4:53-55 ("The heat equalizer 269 is preferably made of a special fiber which can withstand temperature as high as 2000 degrees centigrade."), 2:57-60 ("This electric current preferably flows through the electric heat wire inside the atomizer tube, which then heats up the heat equalizer with absorbed liquid from the liquid-container."); 8:43-45 ("a heat equalizer coupled with an electric heating wire, the [liquid] container filled with the media, and the air-puffing hole."), Fig. 3.

131. Because the heat equalizer comprises a fiber material for absorbing liquid, it is my opinion that a POSA would have understood that the heat equalizer draws liquid via capillary action through its fibers. Thus, a POSA would have understood the heat equalizer to be a wicking element under the construction adopted by the Petitioner – "any material through which liquid may be drawn via capillary action." EX1049.003. Indeed, wicking elements made of fiber were well known in the art as of 2013. *See e.g.*, EX1002, 5:6-11 (disclosing an e-cigarette having a "capillary wick [] hav[ing] a fibrous or spongy structure. For example, the capillary wick may comprise a plurality of fibers or threads…"). Because the heat equalizer absorbs the vaporizable liquid, it is at least partially in contact with the liquid, as this claim limitation requires.

132. Concerning the construction proposed by Petitioner in the related Section 337 Investigation (but not adopted here), Pan discloses that its heat equalizer is a fiber material twined with the electric heating wire. EX1024, 4:53-54 ("The heat

NJOY Exhibit 1005.106

equalizer 269 is preferably made of a special fiber…"); 6:52-54 ("a heat equalizer onto which the electric heating wire is wired and is made of fibers…"). In light of this disclosure, it is my opinion that a POSA would have known this heat equalizer was a pliable bundle of fibers for drawing liquid by capillary action.

i. **[1.I] a heating element provided within the body in contact with the wicking element and operable to heat the vaporizable liquid,**

133. It is my opinion that Pan discloses this limitation.

134. Pan discloses a "heat equalizer 269 twined with an electric heating wire 265" within the body of the electronic atomizer. EX1024, 5:2-3, Fig. 3. Pan also discloses that the "electric heating wire 265…can be made from tungsten or another electric heating material, which produces heat when the electric current flows therethrough." EX1024, 4:55-58. The electric heating wire is therefore a "heating element" under the construction adopted by the Petitioner – "a conductive material shaped into a wire, coil, or flat ribbon that generates heat in response to current." EX1049.003.

135. Pan also discloses that electric heating wire 265 is operable to vaporize liquid. For example, Pan discloses that "[t]he electric heating wire 265…produces heat when the electric current flows therethrough…to supply heat for atomization or vaporization of the liquid inside the liquid-storing media 264."). EX1024, 4:55-62; *see also* 5:62-67 ("The user puffs on the end of the electronic cigarette [to] generate

NJOY Exhibit 1005.107

an electric current flowing through the electric heating wire, which achieves vaporization of the solution inside the liquid container.”).

j. <u>[1.J] wherein the wicking element is configured to deliver the vaporizable liquid to the heating element, and</u>

136. It is my opinion that Pan discloses this limitation.

137. As I explained above with respect to claim limitation [1.H], Pan discloses that the heat equalizer 269 absorbs liquid from the liquid container and is twined with the heating wire 265 to allow the heating wire to vaporize the liquid. *See also* EX1024, 2:58-60 (“the electric heat wire…heats up the heat equalizer with absorbed liquid from the liquid-container.”). Therefore, the wicking element is configured to deliver the vaporizable liquid to the heating element.

k. <u>[1.K] wherein the entire heating element is disposed between the insertion end of the chamber and the base end of the chamber when the cartomizer is inserted into the chamber such that the outer shell protects the heating element.</u>

138. It is my opinion that Pan discloses this limitation.

139. As Pan discloses in Figure 7, reproduced and annotated below, when the electronic atomizer is inserted into the chamber of the electronic inhaler, the entire heating wire 265 is disposed between the insertion end of the chamber and base ends of the chamber. Because the heating wire is positioned within the chamber, it is protected by inhaler tube 10 (outer shell).

NJOY Exhibit 1005.108

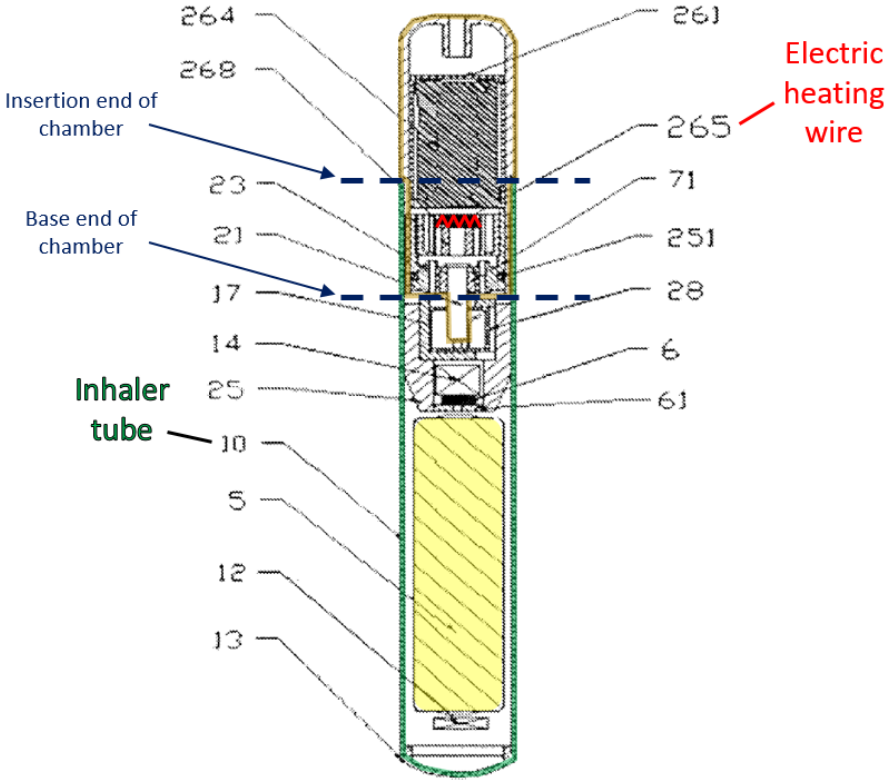

Electronic atomizer
connected to
Electronic inhaler

EX1024, Fig. 7

3. Claim 5: The vaporizer of claim 1, wherein the plurality of charger electrical contacts are arranged linearly at the first end of the battery portion.

140. It is my opinion that Pan and Levin in combination renders obvious this limitation.

141. As I explained above with respect to claim limitation 1.D, the combination of Pan and Levin renders obvious a vaporizing device comprising a micro-USB charging port at the distal end of Pan's device, and that such a port

NJOY Exhibit 1005.109

comprises a plurality of external contacts that are charger electrical contacts. *See* [1.D].

142. As discussed in Section VIII.C.1.a and shown below, a POSA would have understood a micro-USB port specified by the USB standard at the time of Levin comprises a plurality of charger electrical contacts arranged linearly.

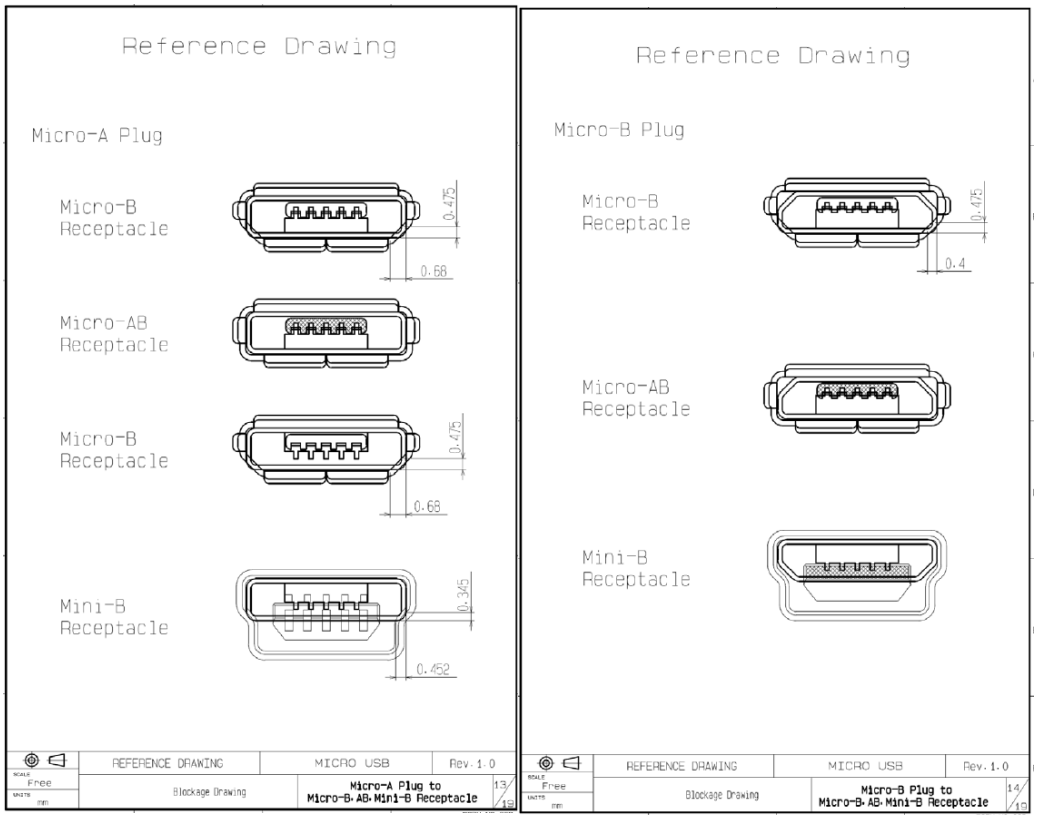

EX1011.026-027, Figs. 4-13, 14

4. Claim 7: The vaporizer of claim 1, wherein the cartomizer further comprises a mouthpiece opposite an end of the cartomizer configured for insertion into the chamber.

143. It is my opinion that Pan discloses this limitation.

NJOY Exhibit 1005.110

144. Pan discloses an air outlet 302 from which a consumer inhales vapor in its electronic atomizer (i.e., cartomizer). EX1024, 6:19-21 ("Referring to FIGS. 2 and 3, the tubular electronic atomizer includes exterior wall 300 having air-puffing hole 302 formed therethrough."). The air outlet located at an end that is opposite to the end of the cartomizer that is configured for insertion into the chamber of the electronic inhaler (i.e., battery portion). A POSA would have understood that the area surrounding the air outlet is a mouthpiece because it is a portion of the device to be used by the mouth of adult consumers. EX1024, 6:62-63 ("The user puffs on the end of the electronic cigarette with the air-puffing hole…").

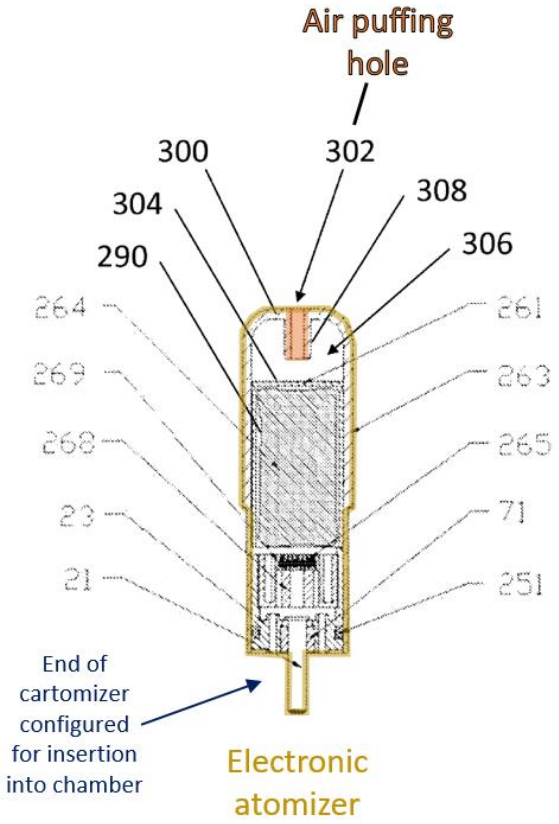

EX1024, Fig. 3.

NJOY Exhibit 1005.111

5. Claim 9: The vaporizer of claim 1, wherein the cartomizer further comprises electrical circuitry connected with the heating element.

145. It is my opinion that Pan discloses this limitation.

146. Pan discloses that the "two ends of the electric heating wire 265 are going through the small holes of the supporting piece 268 and connected to the second electric connector 267 to supply heat for atomization or vaporization of the liquid inside the liquid-storing media 264." EX1024, 4:58-62. A POSA would have understood that the ends of the heating wire are metal wires and constitute the recited "electrical circuitry connected with the heating element" because they "direct an electric current between the cartomizer electrical contacts and the heating element," as contemplated by the '722 patent. 722 Patent, 3:67-4:9 ("the cartomizer including: …cartomizer electrical circuitry operable to direct an electric current between the cartomizer electrical contacts and the heating element…").

6. Claim 10

a. [10.A] A vaporizer comprising:

147. *See* limitation [1.A].

b. [10.B] a battery portion comprising: a battery housing segment;

148. *See* limitation [1.B].

NJOY Exhibit 1005.112

c. [10.C] a cartomizer receiving segment defining a cartomizer chamber having an insertion end distal from the battery housing segment, the cartomizer chamber further having a base end proximate to the battery housing segment,

149. *See* limitation [1.C].

d. [10.D] wherein an outer shell is commonly shared by the battery housing segment and the cartomizer receiving segment;

150. *See* limitation [1.E].

e. [10.E] a plurality of charger electrical contacts disposed at a first end of the battery portion opposite the insertion end of the cartomizer chamber, the insertion end of the cartomizer chamber being at a second end of the battery portion; and

151. It is my opinion that Pan and Levin in combination renders obvious this limitation.

152. As I explained above with respect to limitation [1.D], the combination of Pan and Levin renders obvious a vaporizer comprising a plurality of charger electrical contacts disposed at a first end of the battery portion opposite the insertion end of the cartomizer, the insertion end of the cartomizer chamber being at a second end of the battery portion.

f. [10.F] at least one magnet of the battery portion, the at least one magnet of the battery portion in or proximate to the cartomizer chamber; and

153. It is my opinion that the combination of Pan and Levin renders obvious this limitation.

154. As I explained above in Section VIII.C.1.b, a POSA would have been motivated to incorporate Levin's teaching of magnetic coupling into Pan's electronic cigarette device such that Pan's electronic inhaler (i.e., battery portion) contains one or more magnets configured to attract to and couple with one or more corresponding magnets in the electronic atomizer (i.e., cartomizer). As shown in the figure below, the magnets of the modified Pan's battery portion are in or proximate the cartomizer chamber.

NJOY Exhibit 1005.114

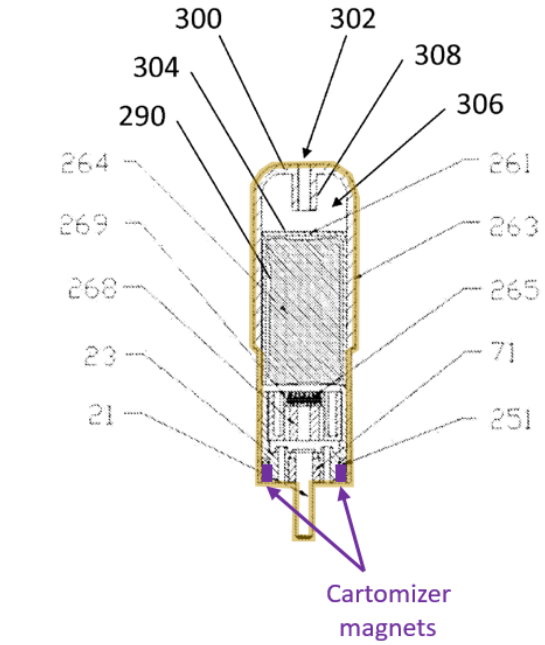

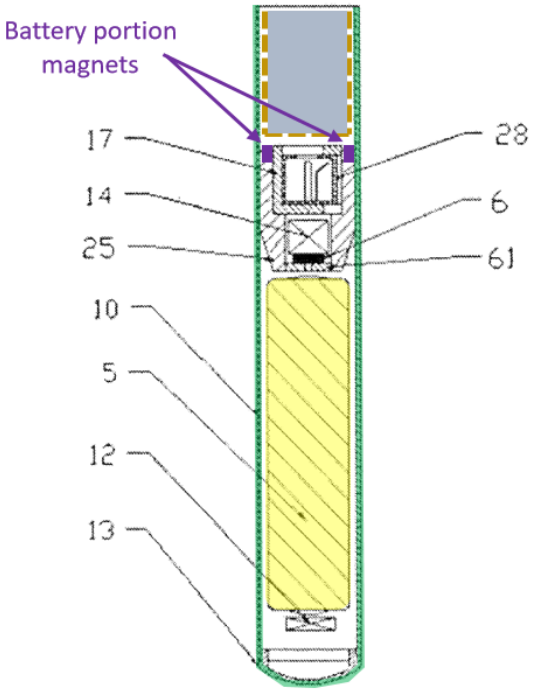

EX1024, Figs 3, 5 (annotated)

NJOY Exhibit 1005.115

g. **[10.G] a cartomizer insertable into the cartomizer chamber at the insertion end, the cartomizer comprising:**

155. *See* limitation [1.F].

h. **[10.H] a body including a structure configured to hold a vaporizable liquid;**

156. *See* limitation [1.G].

i. **[10.I] a wicking element provided within the body and at least partially in contact with the vaporizable liquid;**

157. *See* limitation [1.H].

j. **[10.J] a heating element provided within the body in contact with the wicking element and operable to heat the vaporizable liquid,**

158. *See* limitation [1.I].

k. **[10.K] wherein the wicking element is configured to deliver the vaporizable liquid to the heating element, and**

159. *See* limitation [1.J].

l. **[10.L] wherein the entire heating element is disposed between the insertion end of the cartomizer chamber and the base end of the cartomizer chamber when the cartomizer is inserted into the cartomizer chamber such that the outer shell protects the heating element; and**

160. *See* limitation [1.K].

NJOY Exhibit 1005.116

m. <u>[10.M] a metal element disposed near a base end of the cartomizer for coupling with the at least one magnet of the battery portion.</u>

161. It is my opinion that Pan and Levin in combination renders obvious this limitation.

162. As I explained above in Section VIII.C.1.b, a POSA would have been motivated to incorporate Levin's teaching of magnetic coupling into Pan's electronic cigarette device such that Pan's electronic inhaler (i.e., battery portion) contains one or more magnets configured to attract to and couple with one or more corresponding magnets in the electronic atomizer (i.e., cartomizer). As shown below, the magnets of the modified cartomizer would be disposed near a base end of the cartomizer.

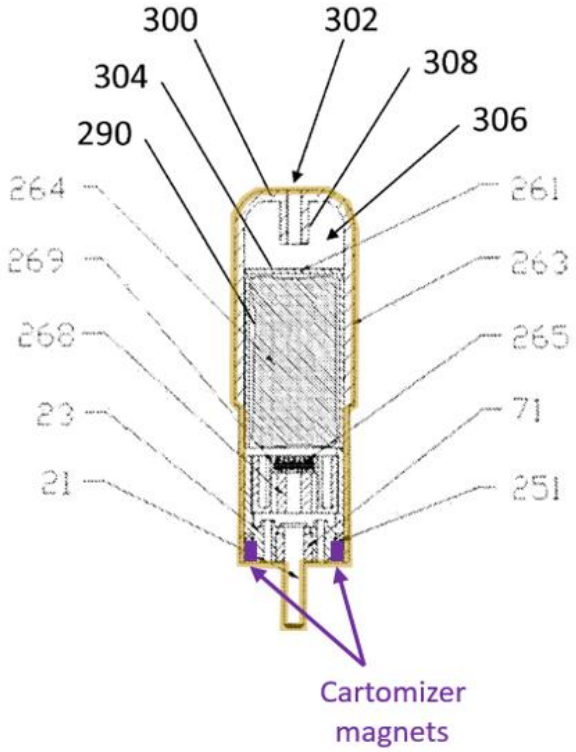

EX1024, Fig. 3

163. A POSA would have understood that a magnet is most typically a metal element. Therefore, the magnets disposed near the base end of the Pan's modified cartomizer constitute the recited "metal element disposed near a base end of the cartomizer for coupling with at least one magnet of the battery portion."

7. Claim 11: The vaporizer of claim 10, wherein the battery portion further comprises one or more battery electrical contacts in or proximate the cartomizer chamber of the cartomizer receiving segment.

164. It is my opinion that Pan discloses this limitation.

165. Pan discloses that its electronic inhaler (i.e., battery portion) comprises "a first electric connector 17 of a DC plug-socket type…located on the DC socket seat 28." EX1024, 5:30-36. A POSA would have understood that the electric connector 17 is a battery contact. EX1024, 4:7-12 ("Referring to FIG. 1, ***the electric power source 5 supplies an electric current*** to the electronic atomizer 22 and other electric units to heat up the heat equalizer through the connected electronic inhaler and atomizer 22 ***through the first electric connector 17*** of the inhaler and the second electric connector 21 of atomizer 22.") (emphasis added), 5:47-48 ("The electric power source 5 may be a battery of rechargeable or non-rechargeable type."). Furthermore, as shown in the figure below, a POSA would have understood that the electric connector 17 is proximate to the cartomizer chamber of the cartomizer receiving segment.

NJOY Exhibit 1005.118

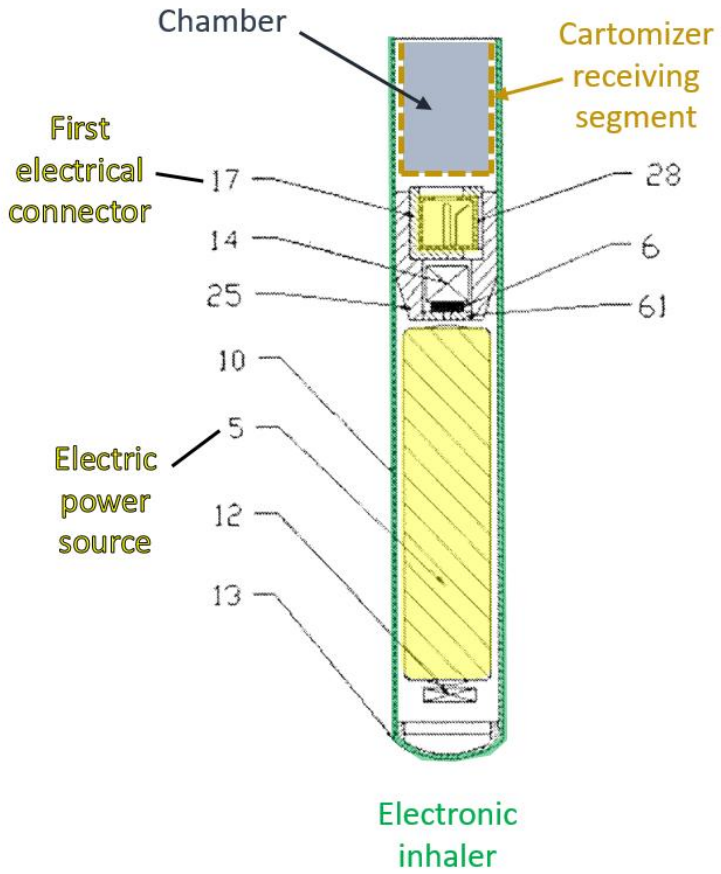

EX1024, Fig. 5

166. Therefore, the electric connector 17 is "one or more battery contacts in or proximate the cartomizer chamber of the cartomizer receiving segment."

8. Claim 12: The vaporizer of claim 10, wherein the cartomizer further comprises one or more cartomizer electrical contacts for connecting with one or more battery electrical contacts in or proximate the cartomizer chamber.

167. It is my opinion that Pan discloses this limitation.

168. As I explained above, Pan discloses that the battery portion comprises a first electric connector 17 in or proximate the cartomizer chamber of the cartomizer

receiving segment. Correspondingly, Pan discloses that the electronic atomizer (i.e., cartomizer) comprises a "second electric connector 21 being of a DC plug-socket type." EX1024, 4:64-65. Pan explains that the second electric connector 21 (cartomizer electrical contact) is electrically connected to the first electric connector 17 (battery electrical contact) such that the electronic inhaler (battery portion) powers the electronic atomizer (cartomizer). EX1024, 6:1-9 ("FIG. 7 is a section view of another electronic cigarette when the electronic inhaler and electronic atomizer are connected via the electric connectors of the DC plug-socket type…The connection is done through the first electric connector socket 28 of the electronic inhaler and the second electric connector plug 21 of the integrated electronic atomizer."); 4:15-18 ("generate an electric current form the electric power source 5 to the electronic atomizer 22 for vaporizing of a liquid…").

9. Claim 13: The vaporizer of claim 10, wherein the plurality of charger electrical contacts are arranged linearly at the first end of the battery portion.

169. *See* limitation [1.D], claim 5.

10. Claim 15

a. <u>[15.A] A vaporizer comprising:</u>

170. *See* limitation [1.A].

b. <u>[15.B] a battery portion comprising:</u>

171. *See* limitation [1.B].

NJOY Exhibit 1005.120

c. **[15.C] a plurality of charger electrical contacts disposed at a first end of the battery portion;**

172. *See* limitation [1.D].

d. **[15.D] a battery housing segment for housing a battery between the first end of the battery portion and a second end of the battery portion;**

173. *See* limitation [1.B].

e. **[15.E] a cartomizer receiving segment defining a chamber having an insertion end at the second end of the battery portion and distal from the battery housing segment, the chamber further having a base end proximate to the battery housing segment,**

174. *See* limitation [1.C].

f. **[15.F] wherein an outer shell is commonly shared by the battery housing segment and the cartomizer receiving segment; and**

175. *See* limitation [1.E].

g. **[15.G] one or more battery electrical contacts in or proximate the chamber of the cartomizer receiving segment; and**

176. *See* limitation [11].

h. **[15.H] a cartomizer insertable into the insertion end of the chamber, the cartomizer comprising:**

177. *See* limitation [1.F].

i. **[15.I] a body including a structure configured to hold a vaporizable liquid;**

178. *See* limitation [1.G].

NJOY Exhibit 1005.121

j. **[15.J] a wicking element provided within the body and at least partially in contact with the vaporizable liquid;**

179. *See* limitation [1.H].

k. **[15.K] a heating element provided within the body in contact with the wicking element and operable to heat the vaporizable liquid,**

180. *See* limitation [1.I].

l. **[15.L] wherein the wicking element is configured to deliver the vaporizable liquid to the heating element, and**

181. *See* limitation [1.J]

m. **[15.M] wherein the entire heating element is disposed between the insertion end of the chamber and the base end of the chamber when the cartomizer is inserted into the chamber such that the outer shell protects the heating element; and**

182. *See* limitation [1.K].

n. **[15.N] one or more cartomizer electrical contacts for connecting with the one or more battery electrical contacts in or proximate the chamber.**

183. *See* claim 12.

11. Claim 16: The vaporizer of claim 15, wherein the plurality of charger electrical contacts are arranged linearly at the first end of the battery portion.

184. *See* limitation [1.D], claim 5.

NJOY Exhibit 1005.122

12. Claim 18: The vaporizer of claim 1, the battery portion further comprising at least one magnet in or proximate to the chamber of the cartomizer receiving segment.

185. *See* limitation [10.F].

13. Claim 19: The vaporizer of claim 18, the cartomizer further comprising a metal element disposed near a base end of the cartomizer for coupling with the at least one magnet of the battery portion.

186. *See* limitation [10.M].

14. Claim 20: The vaporizer of claim 15, the battery portion further comprising at least one magnet in or proximate to the chamber of the cartomizer receiving segment.

187. *See* limitation [10.F].

15. Claim 21: The vaporizer of claim 20, the cartomizer further comprising a metal element disposed near a base end of the cartomizer for coupling with the at least one magnet of the battery portion.

188. *See* limitation [10.M].

D. Ground 2: Pan and Levin and further in view of Tucker and the knowledge of a POSA

189. It is my opinion that Claims 14 and 17 of the ’722 Patent are rendered obvious by the combination of Pan, Levin, and Tucker in view of the knowledge of a POSA, and therefore are unpatentable under 35 U.S.C. § 103.

190. Claims 14 and 17 the ’722 Patent further recite “a window on or proximate to the shell [of the battery portion], the window permitting viewing of the cartomizer when the cartomizer is inserted into the cartomizer chamber.”

191. As I explained above with respect to Ground 1, the combination of Pan and Levin discloses every element of each of claims 14 and 17 except for a translucent window on Pan's inhaler tube.

1. Motivation to Combine

192. It is my opinion that a POSA would have had a motivation to combine Pan, Levin, Tucker, and the knowledge of a POSA to modify Pan's inhaler tube to include a window for viewing its atomizer when inserted into the inhaler tube.

193. Pan discloses a disposable electronic atomizer (i.e., cartomizer). *See* EX1024, 6:27-28 ("a tubular electronic atomizer that is detachably attached to the electronic inhaler"); 3:7-8 ("The integrated atomizer of the present invention is an integrated and disposable part"). Pan also discloses that the outer shell of the electronic atomizer and the electronic inhaler (i.e., battery portion) are "made of either a metal or a plastic." EX1024, 5:25; 4:47-48 ("The atomizer tube 263 is preferably made of a metallic or plastic material.").

194. A POSA would have known that plastics may be made transparent. A POSA would have also known that transparent plastics were commonly used in prior art e-cigarette devices:

> This invention relates to a field of electronic cigarettes, and particularly to an electronic cigarette which is ultra-long and transparent.
>
> ***

NJOY Exhibit 1005.124

> The housing 12 is a **cylindrical plastic tube** in the illustrative embodiment. The **plastic is transparent or translucent** to facilitate visual inspection of the liquid content.
>
> ***
>
> In order to facilitate observing the usage and balance of the e-liquid in the cartridge 1, and avoiding phenomenon of the e-liquid dryout in the cartridge 1, the cartridge 1 is made of **transparent plastic material**.
>
> ***
>
> The sucking cylinder 1 is made of stainless steel, or **can be made of plastic** or other suitable materials. The sucking cylinder 1 can be **designed to be whole transparent** or at least partially transparent, or the portion thereof where the liquid smoke cup 3 is mounted is transparent to facilitate to observe the amount of the liquid smoke in the liquid smoke cup 3.
>
> ***
>
> The inhaling cylinder 1 is a hollow cylindrical structure, especially in this embodiment, **a cylindrical casing which is made of transparent or translucent plastic material**, or made as a metal casing.

See e.g., EX1013, [0001]; EX1031, 7:52-55 (emphasis added); EX1038, 4:58-61 (emphasis added); EX1039, 5:14-20 (emphasis added); EX1040, 5:22-25 (emphasis added).

195. Therefore, a POSA would have understood that Pan's plastic atomizer may be transparent. But the cartridge receptacle would hide a portion of the atomizer when the atomizer is inserted into the receptacle. As shown in Figure 7, annotated below, a portion of the plastic atomizer is obscured by the receptacle.

NJOY Exhibit 1005.125

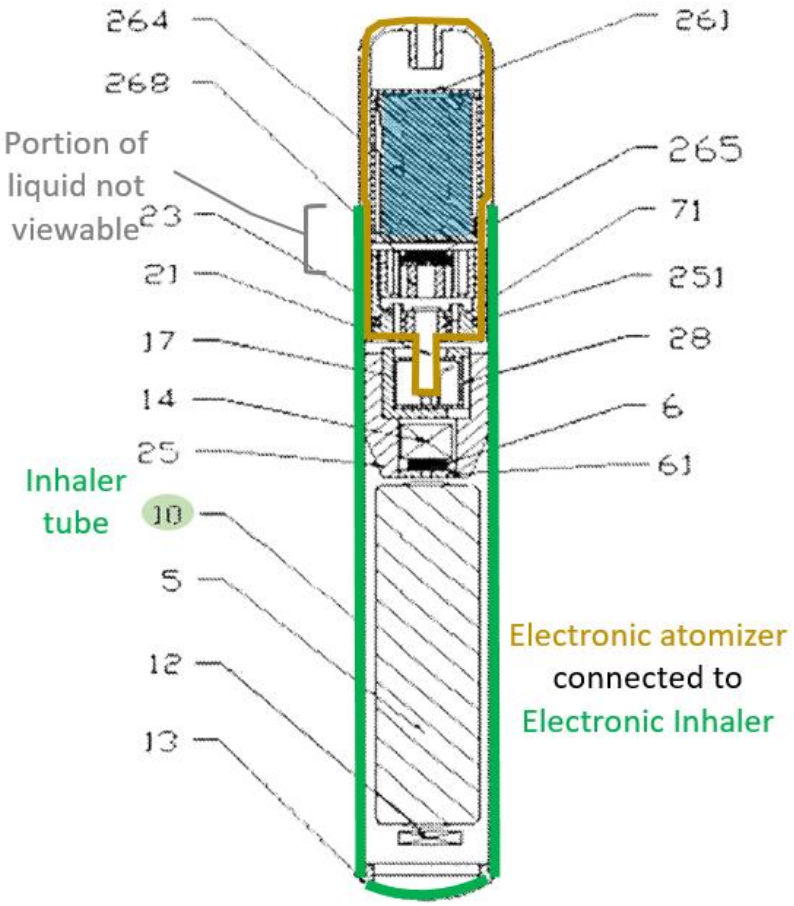

EX1024, Fig. 7

196. Thus, while an adult consumer can see into a portion of the cartridge through its transparent plastic shell, the consumr cannot see the bottom part of the cartridge during usage. And a POSA would have understood that providing visibility to the bottom part is critical because it notifies a consumer when the cartridge should be replaced.

197. Tucker provides the solution. Specifically, Tucker teaches a window for viewing the amount of remaining liquid in the cartridge. EX1034, [0038]

(disclosing an e-cigarette with an "outer tube [] includ[ing] a clear (transparent) window 71 formed of a transparent material so as to allow a smoker to see the amount of liquid material remaining in the liquid supply reservoir 22.").

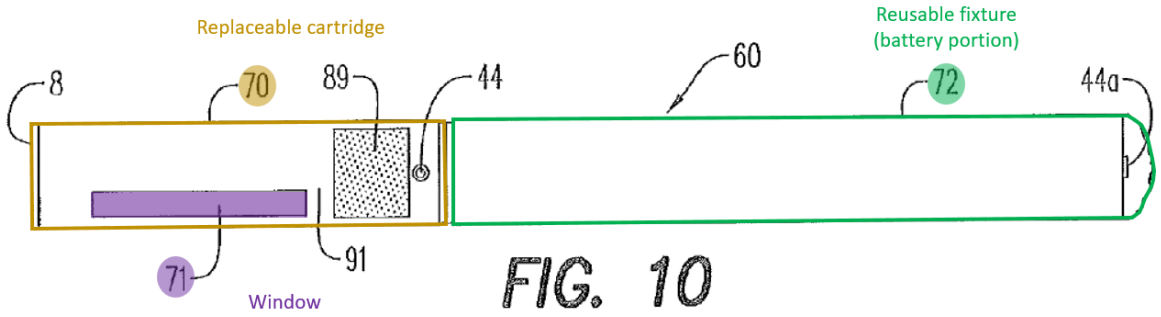

EX1034, Fig. 10

198. I note that Tucker's window is on the cartridge, but a POSA would have recognized that Tucker is teaching that a window can be used (whether that is on the cartridge or elsewhere such as the cartridge receptacle) to see the remaining liquid. Thus, a POSA would take Tucker's teaching of a window and apply that to Pan's receptacle to permit the consumer to see past through the receptacle and into the atomizer to effect the purpose of the window, which is to view the remaining e-liquid. Accordingly, this is a "window" under the parties' constructions because it is an opening or a slit on the shell through which the cartomizer is viewed. EX1049.004 (agreeing that for the '722 Patent, "window" should be construed as an "opening or slit [on or proximate to] / [in] the shell through which the cartomizer is viewed").

NJOY Exhibit 1005.127

199. In view of Tucker's teaching it would have been obvious to modify Pan's inhaler tube to include a window on the shell. A POSA would have been motivated to include a window on Pan's outer shell, either as transparent plastic or a cutout to "facilitate to observe the amount of the internal liquid smoke, and prevent and empty burning of the heating wire after the liquid smoke has run out." EX1030, 4:32-35; EX1034, [0038] ("to allow a smoker to see the amount of liquid material remaining in the liquid supply reservoir 22."). Without a window for viewing the cartridge, a consumer may not be notified in a timely manner to replace an empty cartridge, which may lead to the heating wire overheating and potentially catching fire. *See* EX1030, 4:32-35. Further, enabling a visual determination of the liquid level promotes safety. For example, if the consumer takes a drag on depleted e-cigarette, the consumer may get a "dry hit," which is a super-heated blast of air. EX1055.003 ("Getting a dry hit isn't a great experience and it certainly isn't going to be great for your health as you are inhaling burnt cotton."); EX1038, 4:58-61 ("In order to facilitate observing the usage and balance of the e-liquid in the cartridge 1, and avoiding phenomenon of the e-liquid dryout in the cartridge 1, the cartridge 1 is made of transparent plastic material."). Moreover, without a window for viewing the cartridge, a consumer may think the cartridge is depleted because the visible transparent portion of the cartridge may suggest so, even if liquid remains in the obstructed portion of the cartridge. This may lead to consumer frustration and

NJOY Exhibit 1005.128

dissatisfaction and cause the consumer to replace the cartridge more frequently than needed.

200. In addition, a POSA would have been motivated to place the window near the wicking element to reduce the chance of an adult consumer may be misled about the level of the remaining liquid. Specifically, if the window were placed near the tip of the cartridge, visual inspection of the cartridge may suggest the cartridge is depleted and the consumer may replace a cartridge prematurely. Alternatively, an adult consumer might see a few drops of liquid close to the tip of the cartridge and mistakenly assume that liquid remains down near the wicking element, which may lead to a dry hit. Moreover, a consumer is likely to hold the cigarette vertically, with the cartridge up, to check the remaining liquid, meaning the visibility to the bottom of the cartridge is most critical. A consumer would be much less likely to hold the e-cigarette with the cartridge tilted down because the consumer would be concerned that the cartridge may fall out, and doing so would draw the liquid away from the wick. I also note that while Fig. 3 depicts a small overlapping portion between the outer shell and the cartomizer, Fig. 3 is not an engineering drawing and not necessarily drawn to scale.

201. As I discussed above with respect to Ground 1, limitation [1.G], Pan discloses a "liquid container 261 inside which liquid-storing media 264 being filled with liquids is inserted[.]" EX1024, 4:40-42. Pan teaches that the liquid-storing

NJOY Exhibit 1005.129

media 264 may be made of "specially-designed cotton." *Id.* 4:48. A POSA would still be motivated to allow consumers to view the inside of Pan's cartridge for the reasons noted above even if the liquid-storing media 264 is made of cotton, because the consumer would still be able to view the level of liquid in the media. The liquid used in e-cigarettes often has a yellowish color. *See, e.g.*, EX1032.001 ("Puffing on slim metal tubes loaded with pale yellow liquid…"). A consumer would be able to determine the saturation level of the cotton due to the yellow tint and glisten of the cotton at various liquid levels.

202. In my opinion, a POSA would have been motivated to incorporate a window in Pan for viewing liquid in the liquid container, as shown in the figure below.

NJOY Exhibit 1005.130

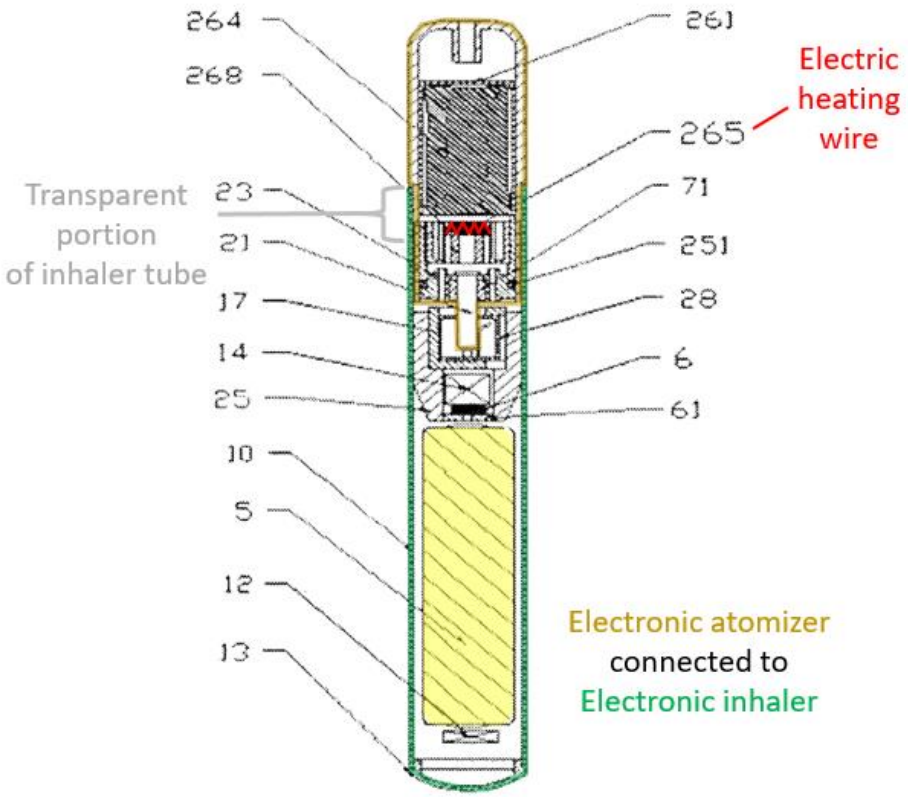

EX1024, Fig. 7.

203. It is my opinion that a POSA would have had a reasonable expectation of success modifying Pan's inhaler tube or electric atomizer exterior wall to incorporate a transparent window and to successfully combine the device with Levin. This is evident by the fact that PAN discloses that its components may be made of plastic, and a POSA would have expected that the device would continue to operate with a transparent plastic window or an opening cut in the inhaler tube.

2. Claims 14 and 17: The vaporizer of claim [10/15], further comprising a window on or proximate to the shell, the

NJOY Exhibit 1005.131

window permitting viewing of the cartomizer when the cartomizer is inserted into the cartomizer chamber.

204. As I discussed above in Ground 1, it is my opinion that the combination of Pan and Levin renders obvious claims 10 and 15. *See* Claim 10, claim 15. Claims 14 and 17 are rendered obvious by the further combination of Pan and Levin in view of Tucker and the knowledge of a POSA.

205. As I discussed above in Section VIII.D.1, a POSA would have been motivated to modify Pan in view of Tucker's teachings to include a transparent portion on the inhaler tube (shell) to permit viewing of the electronic atomizer (cartomizer) when the electronic atomizer is inserted into the chamber. The transparent portion of the inhaler tube is a "window" because it would be an opening (made of transparent material) on the inhaler tube through which the cartomizer is viewed. *See* EX1049.004.

E. Ground 3: Thorens788 in view of Thorens559 and Levin

It is my opinion that claims 1, 5, 7, 9-13, 15-16, and 18-21 of the '722 Patent are unpatentable under 35 U.S.C. § 103 on the ground that they are rendered obvious by the combination of Thorens788, Thorens559, and Levin.

1. Motivation to Combine

a. <u>USB Charging</u>

206. Thorens788 discloses using rechargeable batteries as its power source, and that the rechargeable batteries may be charged by an "external charging portion."

NJOY Exhibit 1005.132

EX1004, 9:29-33 ("Alternatively, the electric power supply may comprise circuitry chargeable by an external charging portion. In that case, preferably the circuitry, when charged, provides power for a pre-determined number of puffs, after which the circuitry must be reconnected to the external charging portion. An example of suitable circuitry is one or more capacitors or rechargeable batteries.").

207. Levin similarly discloses using rechargeable batteries as its power source. Levin additionally teaches charging contacts, *e.g.*, a micro-USB charger, placed at the end of the battery portion:

NJOY Exhibit 1005.133

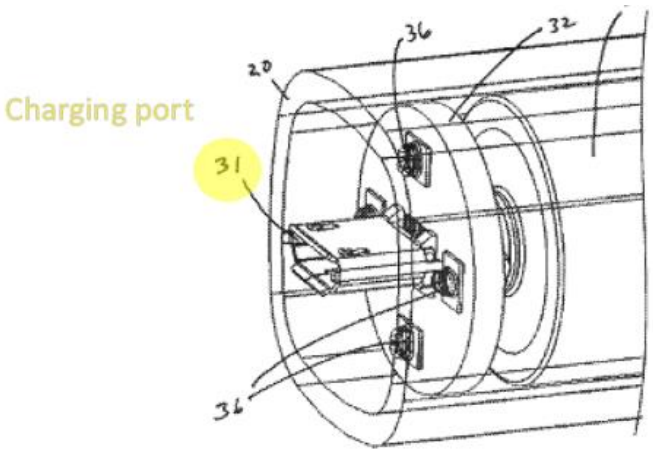

FIG.14B

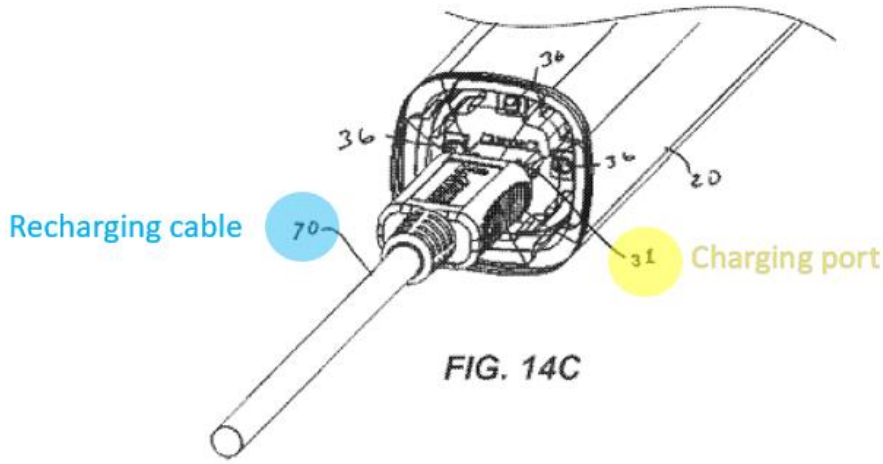

FIG. 14C

EX1003, Figs. 14B-C

See, e.g., EX1003, 23:58-62 ("In certain embodiments, the distal end also includes a recharging port 31, such as in a USB connector 31…so as to facilitate recharging of the power source therein.").

208. In my opinion, a POSA would have understood that a micro-USB port specified by the USB standard at the time of Levin comprises five linearly arranged contacts. Two of such five pins – the VBUS and the GND pins – are used for providing power. EX1011.010.

NJOY Exhibit 1005.134

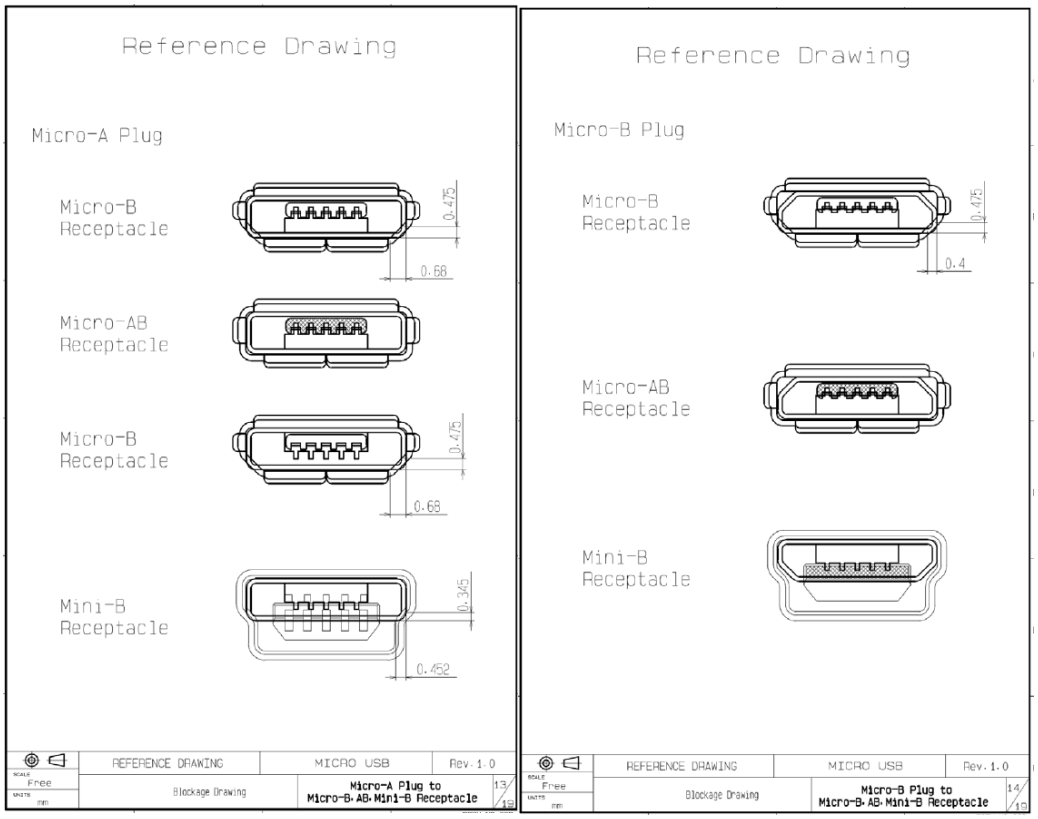

EX1011.026-027, Figs 4-13, 14

209. In my opinion, a POSA would have been motivated to modify Thorens788 to include the micro-USB charging contacts for the reasons I articulated above for Pan: *e.g.*, more ergonomic, micro-USB chargers were ubiquitous, micro-USB chargers permit additional features to be added to the device. *See* Section VIII.C.1.a. Moreover, a POSA would have been further motivated to locate the charging contacts at the distal end as shown below because the consumer would be less likely to touch the contacts during use. Placing the contacts on the side could lead to premature corrosion of the contacts (oil from the consumer's fingers),

NJOY Exhibit 1005.135

increased dirt on the contacts, and possible shorting of the device if the consumer was wearing jewelry.

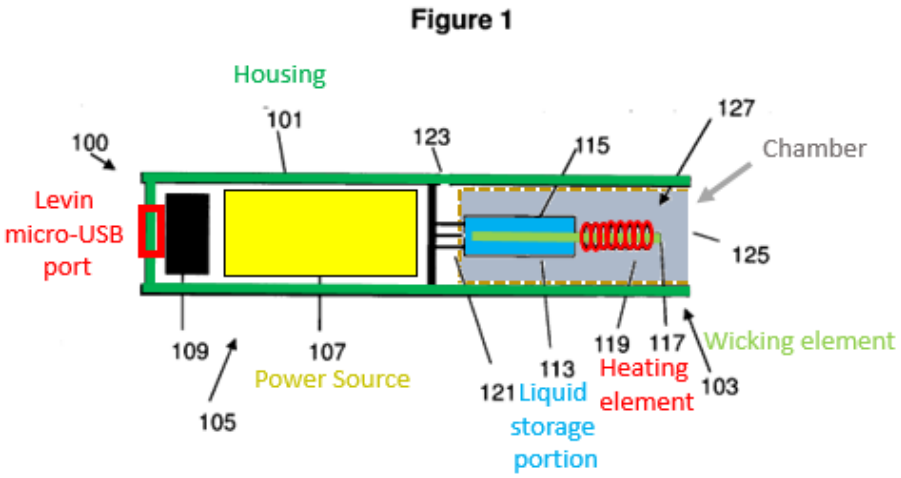

EX1002, Fig. 1

210. It is my opinion that a POSA would have had a reasonable expectation of incorporating a micro-USB receptacle at the distal end of Thorens788's aerosol generating system. Micro-USB receptacles were standardized, well-known in the art, a regularly used in e-vapor devices. *See, e.g.*, EX1028; EX1029; *see also* Section V.C, *supra*.

b. <u>Magnetic Coupling</u>

211. Thorens788 discloses a battery portion that includes a cartomizer receiving segment having a chamber for receiving a cartomizer (cartomizer chamber). *See* limitations [1.B]-[1.C], *infra*. Thorens788, however, does not disclose magnetic coupling.

NJOY Exhibit 1005.136

212. Levin discloses magnetic coupling. *See* Section VIII.C.1.b. In my opinion, a POSA would have been motivated to incorporate Levin's one or more magnets into Thorens788's device such that the aerosol generating system is (i.e., battery portion) configured to couple with one or more corresponding magnets in the liquid storage portion (i.e., cartomizer). For example, it would have been obvious to a POSA to place at least one magnet at a distal end of the liquid storage portion 130, and corresponding magnets near the base of the cartomizer chamber of the aerosol generating system.

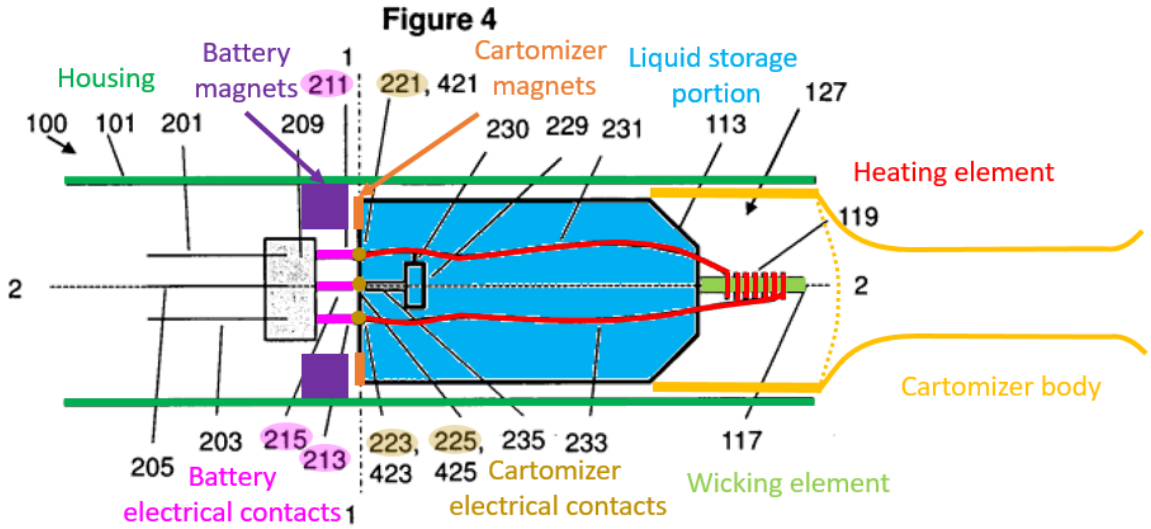

EX1004, Fig. 4

213. It is my opinion that a POSA would have been motivated to make this modification for the same reasons I articulated above for modifying Pan to include Levin's magnets: *e.g.*, ease of use, self-aligning, and permits different shaped components. *See* Section VIII.C.1.b. In my opinion, a POSA would have had a

NJOY Exhibit 1005.137

reasonable expectation of successfully adding magnets to Thorens788 also for the same reasons. *Id*. Indeed, small pieces of magnets would be sufficient to provide magnetic coupling, and adding then would be a trivial modification. Accordingly, it would have been routine for a POSA to combine Levin with Thorens788.

c. <u>Mouthpiece Housing</u>

214. Thorens788 and Thorens231 are directed to substantially the same device. As I explained above, Thorens788 discloses a smoking system comprising a housing, which further comprises a shell and a mouthpiece. EX1004, 10:25-26 ("Preferably, the smoking system comprises a housing. The housing may comprise a shell and a mouthpiece."). Similarly, Thorens231 discloses an "electrically heated smoking system includes a shell and a replaceable mouthpiece." EX1002, Abstract. I further note that the two Thorens references share common inventors. *See* EX1004, (75); EX1002, (75).

215. However, I note two differences between the two Thorens references. First, while Thorens788 states that the heating element and capillary wick are preferably contained with a "mouthpiece", none of its figures illustrates the heating element and capillary wick protected by a structure. EX1004, 10:28-29 ("Preferably, the liquid storage portion, the capillary wick, the at least one heater and the air outlet are contained in the mouthpiece."). Thorens231, in contrast, provides a mouthpiece housing that protects the heating element and capillary wick. EX1002, Fig. 3.

NJOY Exhibit 1005.138

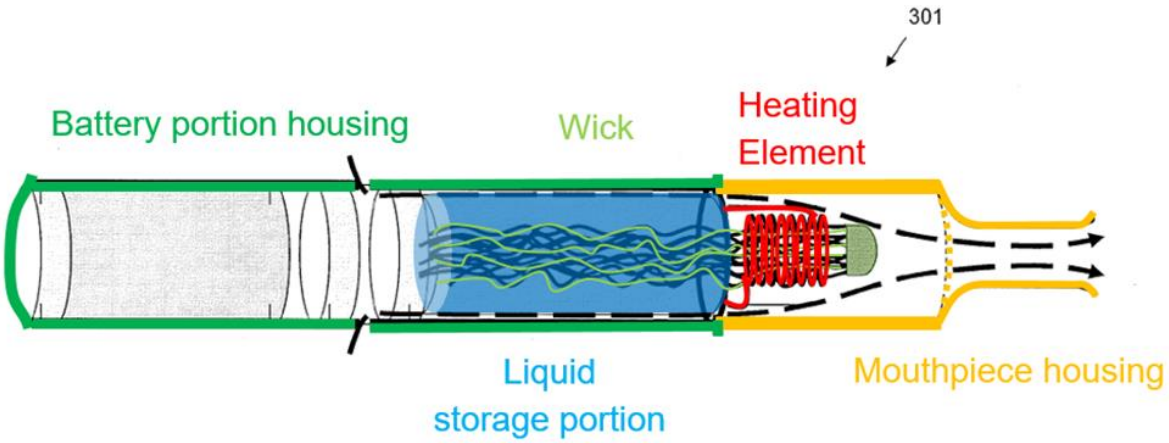

EX1002 (Thorens231), Fig. 3.

216. Second, Thorens788 discloses that its heating element is disposed entirely within the battery housing (EX1004, Fig. 4) when the cartridge is inserted in the battery housing while Thorens231 depicts its heating element outside the battery housing (EX1002, Fig. 3). Despite these minor differences, it is still my opinion that the two Thorens references describe substantially the same device and would have understood that Thorens788 could be adapted to include the aspects depicted by Thorens231.

NJOY Exhibit 1005.139

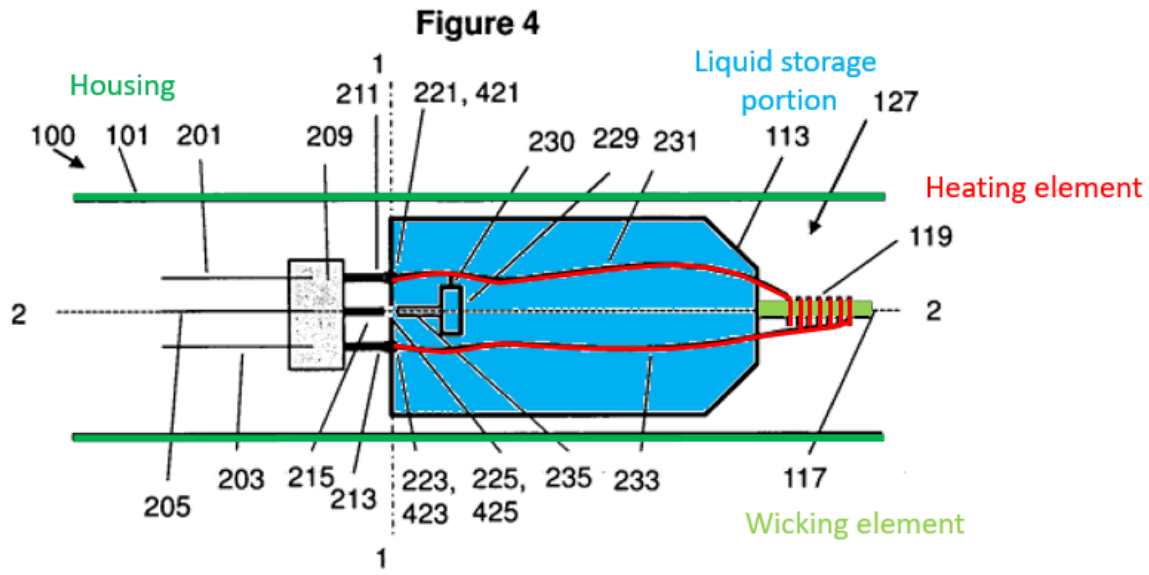

EX1004 (Thorens788), Fig. 4

217. It is my opinion that a POSA would have been motivated to modify Thorens788's smoking system to incorporate a mouthpiece housing because Thorens788 discloses that its mouthpiece is replaceable, and without a housing protecting the heating element, a consumer would have to pull on the heating element to remove the mouthpiece, which may burn the consumer if the heating element is not completely cooled down, and also is inconvenient and unsanitary. EX1004, 10:30-31 ("Preferably, the mouthpiece is replaceable."). Specifically, a POSA would have been motivated to incorporate Thorens231's mouthpiece housing because Thorens788 already discusses a mouthpiece housing, and it would have been natural for a POSA to consider Thorens231, which is directed to substantially

NJOY Exhibit 1005.140

the same invention and shares common inventors with Thorens788. A POSA would have been motivated to modify Thorens788, for example, as illustrated below:

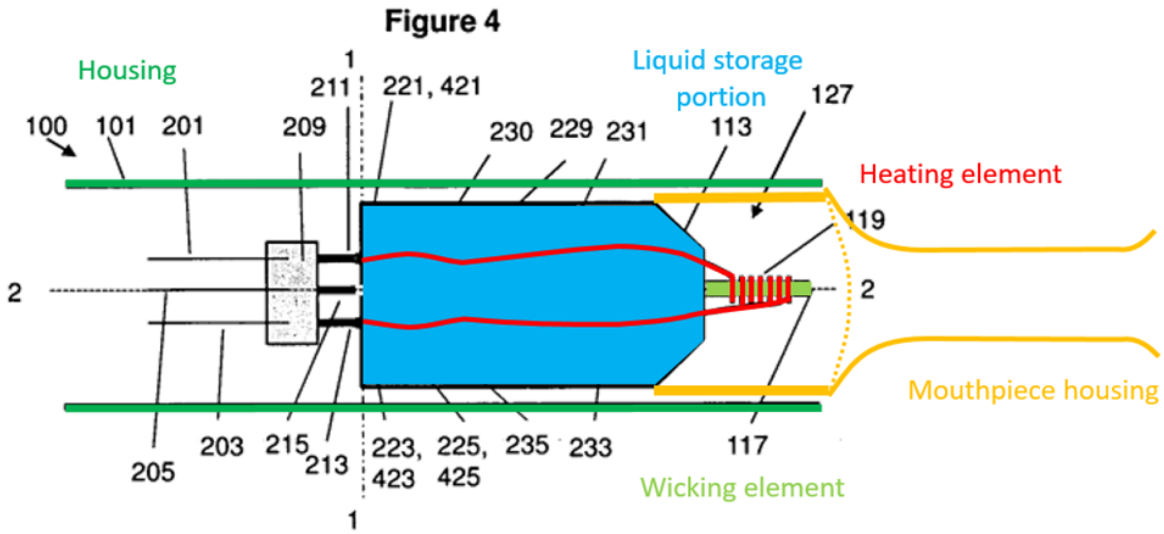

2. Claim 1

a. <u>[1.A] A vaporizer comprising:</u>

218. It is my opinion that Thorens788 discloses this limitation.

219. Thorens788 discloses that its invention "relates to an aerosol generator and to a smoking system." EX1004, 1:4. Specifically, Thorens788 discloses that "[i]n use,…liquid…is vaporized…to form a supersaturated vapour.". EX1004, 6:22-23 ("In use, when the heater is activated, liquid provided by the liquid storage portion is vaporized by the heater to form a supersaturated vapour."); 7:16-18 ("When the heater is activated, the liquid at the second end of the capillary wick is vaporized by the heater to form the supersaturated vapour."). Therefore, it is my opinion that Thorens788 discloses a vaporizer.

NJOY Exhibit 1005.141

b. **[1.B] a battery portion comprising a battery housing segment and a cartomizer receiving segment,**

220. It is my opinion that Thorens788 discloses this limitation.

221. Thorens788 discloses an aerosol generating system 100. EX1004, 12:8-10 ("The aerosol generating system 100 of Figure 1 is an electrically heated aerosol generating system 100 and comprises a housing 101 having a mouthpiece end 103 and a body end 105."). The aerosol generating system is a battery portion because it houses a battery. EX1004, 9:21-26 ("In one embodiment, the aerosol generating system is a smoking system….In that embodiment, the smoking system may further comprise an electric power supply. Preferably, the electric power supply comprises a cell contained in a housing. The electric power supply may be a Lithium-ion battery or one of its variants, for example a Lithium-ion polymer battery."); EX1004, 12:8-11 ("The aerosol generating system 100 of Figure 1 is an electrically heated aerosol generating system 100 and comprises a housing 101 having a mouthpiece end 103 and a body end 105. In the body end 105, there is provided an electric power supply in the form of a battery 107…"); *see also* Section VI.C, *supra*.

222. Thorens788 discloses that the aerosol generator system 100 comprises a housing 101, which is also referred to as the "shell." EX1004, 10:25-28 ("Preferably, the smoking system comprises a housing. The housing may comprise a shell and a mouthpiece….In the case of an electrically heated smoking system, preferably, the electric power supply and the electric circuitry are contained in the

NJOY Exhibit 1005.142

shell."); 12:8-10 ("The aerosol generating system 100 of Figure 1 is an electrically heated aerosol generating system 100 and comprises a housing 101 having a mouthpiece end 103 and a body end 105.").

223. Thorens788 discloses that the aerosol generating system comprises a cartomizer receiving segment. EX1004, 3:7-8 ("Preferably, the [aerosol generating] system comprises a housing for at least partially receiving the liquid storage portion."). More specifically, Figure 2 of Thorens788 depicts a portion of the aerosol generating system, and shows that the aerosol generating system comprises a chamber 127. EX1004, 13:13-14 ("Referring now to Figure 2, this shows an enlarged portion of the aerosol generating system 100 of Figure 1, with the liquid storage portion 113 removed."); 12:17-18 ("The housing 101 also includes…chamber in the form of aerosol forming chamber 127."). As shown in Figure 4, the liquid storage portion 113 is received by the chamber 127.

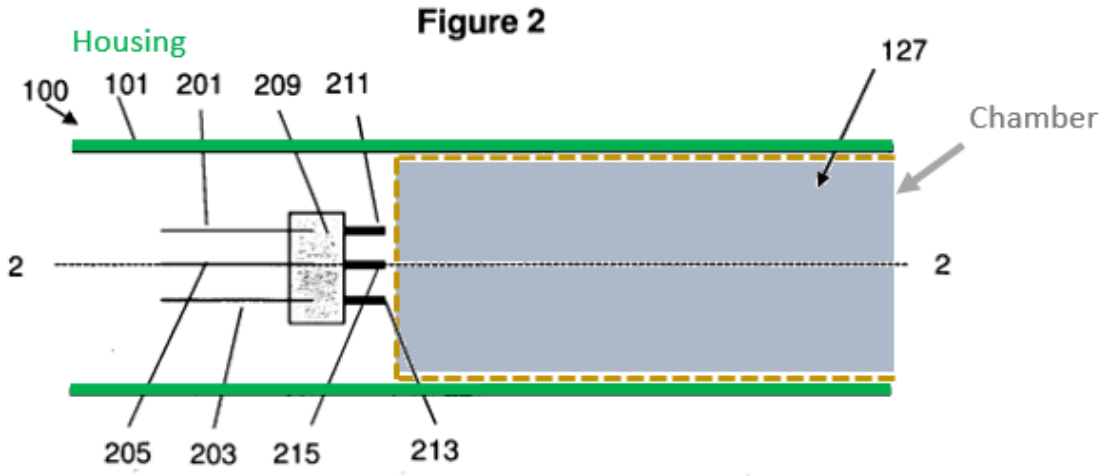

EX1004, Fig. 2

NJOY Exhibit 1005.143

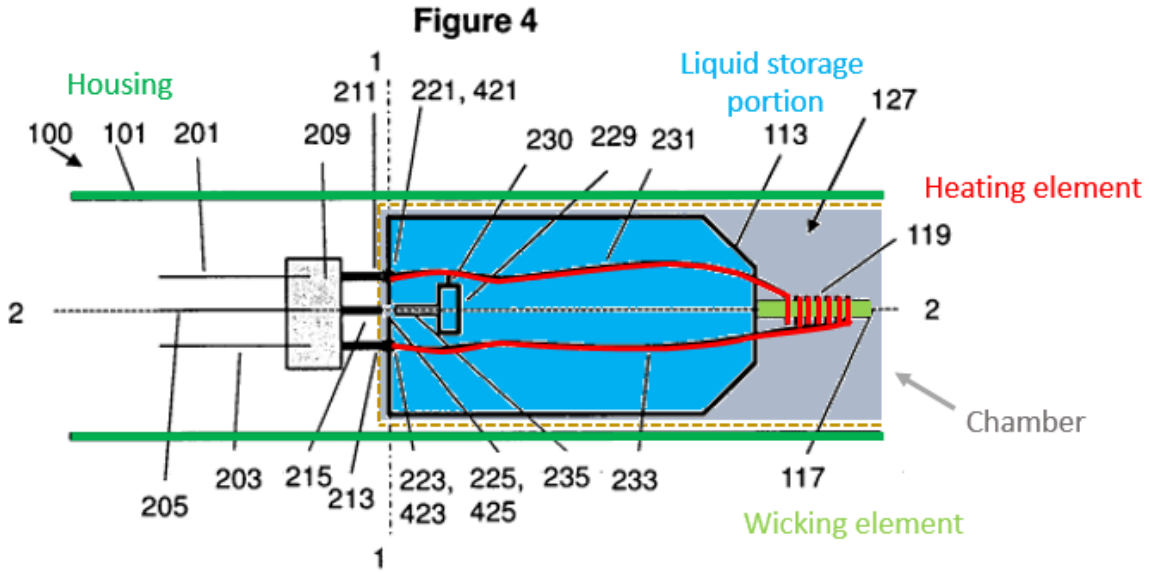

EX1004, Fig. 4

224. Thus, the portion of the aerosol generating system that includes the chamber 127 is the recited cartomizer receiving system.

225. The part of the aerosol generating system that contains the battery is the recited "battery housing segment." Although Figure 2 only depicts a portion of the aerosol generating system and does not depict the battery, a POSA would have understood that the battery is contained within the aerosol generating system at an end opposite to the cartomizer receiving segment. EX1004, 14:14-18 ("The electrical contacts 221 or 421, 223 or 423 and electrically conductive portions 231, 233 allow electrical energy to be supplied to the heating element 119 from a battery or other power source, not shown in Figure 2. The battery or power source 107 is usually mounted on or within the aerosol generating system 100."). A POSA would

NJOY Exhibit 1005.144

have so understood by referring to Figure 1, which shows the entirety of the aerosol generating system.

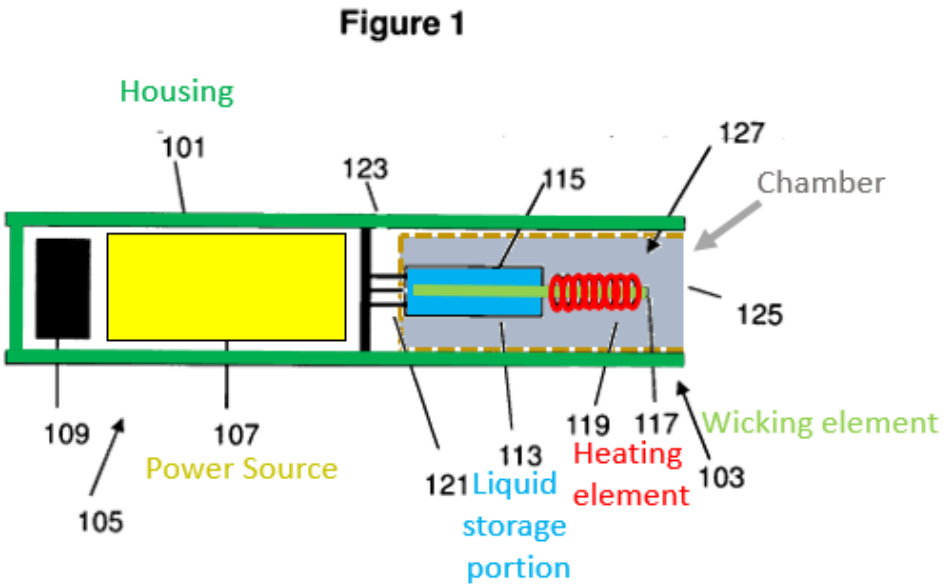

EX1004, Fig. 1

c. <u>[1.C] the cartomizer receiving segment defining a chamber having an insertion end distal from the battery housing segment and a base end proximate to the battery housing segment,</u>

226. It is my opinion that Thorens788 discloses this limitation.

227. It is my opinion that Thorens788 discloses an aerosol generating system 100 having aerosol generating chamber 127 which receives the liquid storage portion 130. *See* limitation [1.B].

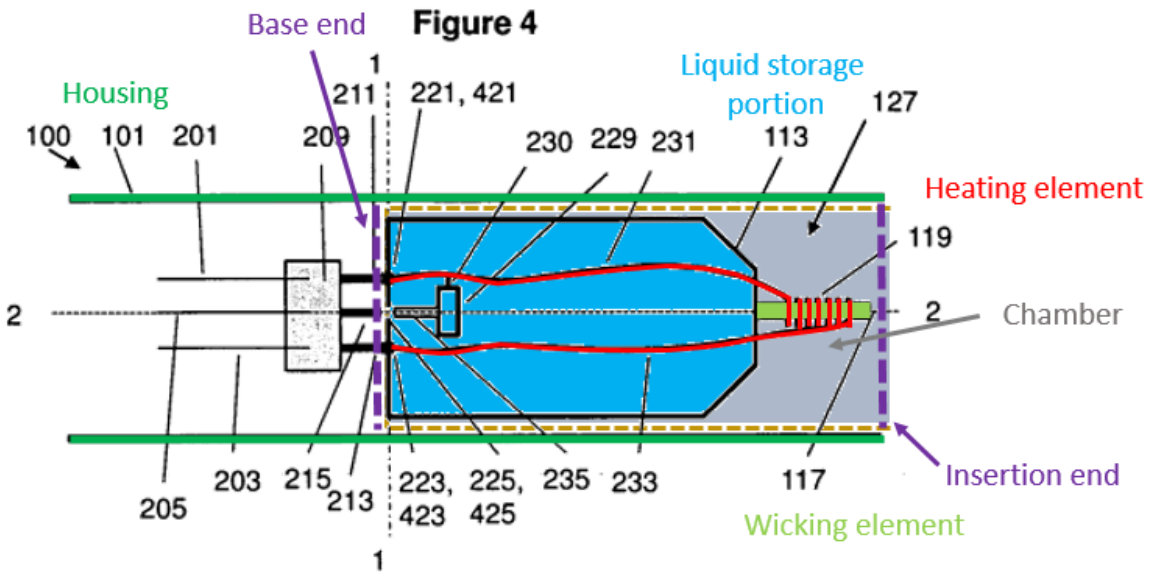

EX1004, Fig. 4

A POSA would understand aerosol generating chamber 127 to be the recited "chamber" because, as shown above, it has an insertion end distal from the battery housing segment and a base end proximate to the battery housing segment.

d. <u>[1.D] the battery portion further comprising a plurality of charger electrical contacts to provide electrical charge to a battery housed in the battery housing segment, the charger electrical contacts disposed at a first end of the battery portion opposite the insertion end of the chamber of the cartomizer receiving segment,</u>

228. It is my opinion that Thorens788 and Levin in combination render obvious this limitation.

229. Thorens788 discloses using rechargeable batteries as its power source. EX1004, 9:32-33 ("An example of suitable circuitry is one or more capacitors or

rechargeable batteries.”). As discussed in Section VIII.E.1.a, it would have been obvious to a POSA to incorporate Levin’s USB charging port, which “comprises a plurality of charger electrical contacts,” at the distal end of Thorens788’s aerosol generating system (i.e., battery portion end as taught by Levin).

e. <u>[1.E] wherein an outer shell is commonly shared by the battery housing segment and the cartomizer receiving segment; and</u>

230. It is my opinion that Thorens788 discloses this limitation.

231. The aerosol generating system of Thorens788 comprises an “elongated housing” which both “receiv[es] the liquid storage portion” and contains the battery. EX1004, 3:7-8 (“Preferably, the system comprises a housing for at least partially receiving the liquid storage portion.”), 8:8-9 (“Preferably, the smoking system comprises an elongate housing[.]”), 9:21-25 (“Preferably, the electric power supply comprises a cell contained in a housing.”). Thus, Thorens788 discloses an outer shell (i.e., housing 101) commonly shared by the battery housing segment and the cartomizer receiving segment, as shown below:

NJOY Exhibit 1005.147

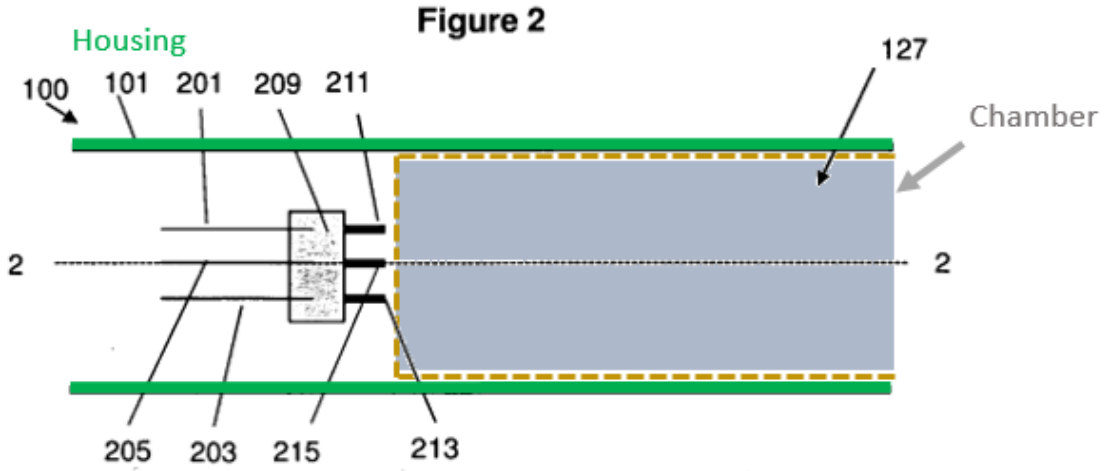

EX1004, Fig. 2

f. <u>[1.F] a cartomizer insertable into the chamber at the insertion end, the cartomizer comprising:</u>

232. It is my opinion that Thorens788 discloses this limitation.

233. Thorens788 discloses a single component cartridge 113 (also referred to as liquid storage portion) containing liquid 115 and a heating coil 119. EX1004, 12:12-13 ("In the mouthpiece end 103, there is provided a liquid storage portion or cartridge 113 containing liquid 115, a capillary wick 117 and a heating element in the form of a heating coil 119."); *id.*, 1:35-36 ("The liquid storage portion may further comprise a heating element. Preferably, the heating element is integral to the liquid storage portion."). Therefore, it is my opinion that cartridge 113 is a "cartomizer." *See* EX1033, [0008] ("The cartomizer replaces the separate cartridge and atomizer components with a single integrated component").

234. Cartridge 113 is insertable into the chamber at the insertion end. *See* [1.B], [1.C]; EX1004, 15:15-16 ("Figure 4 shows the liquid storage portion 113 of Figure 3 inserted into the aerosol generating system 100 of Figure 2."),

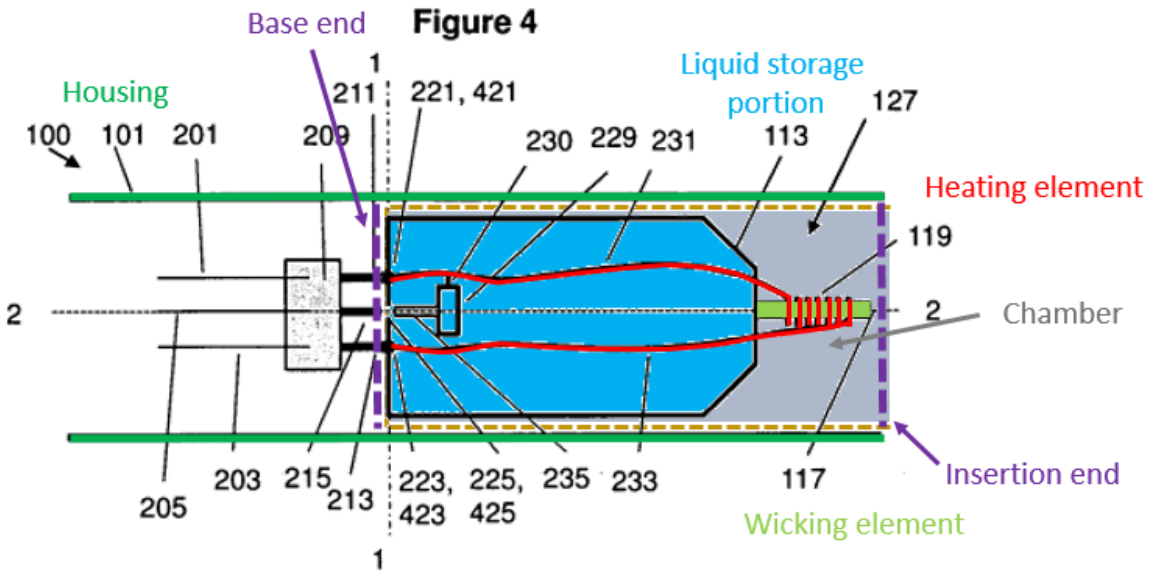

EX1004, Fig. 4

g. <u>[1.G] a body including a structure configured to hold a vaporizable liquid;</u>

235. It is my opinion that Thorens788 in view of Thorens231 renders obvious this limitation.

236. Thorens788 discloses a liquid storage portion. *See* Fig. 3.

NJOY Exhibit 1005.149

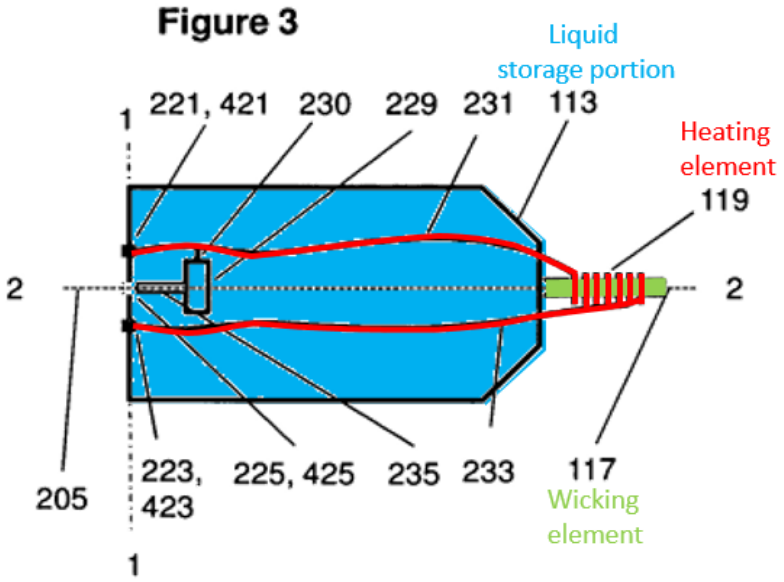

EX1004, Fig. 3

237. And Fig. 2 of Thorens231 depicts a mouthpiece housing to protect the heating element and the capillary wick:

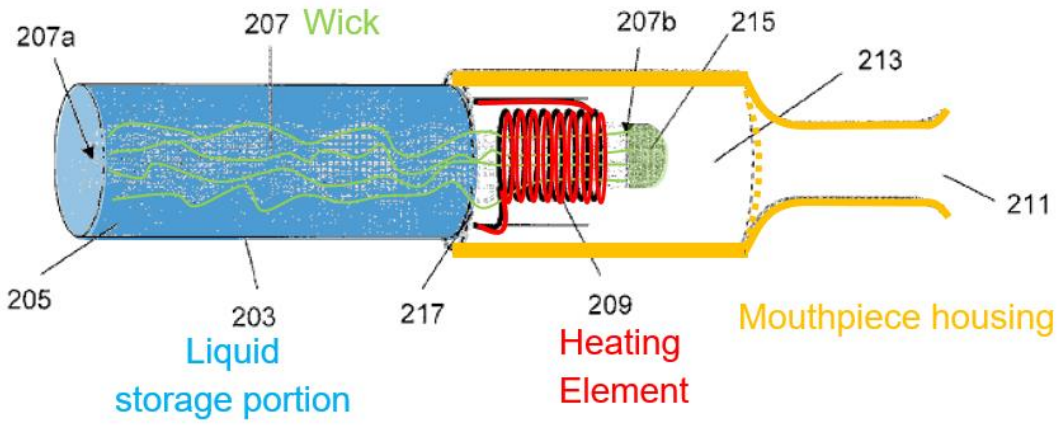

EX1002, Fig. 2

NJOY Exhibit 1005.150

238. As I explained above, a POSA would have been motivated to incorporate Thorens231's mouthpiece housing as illustrated in Figure 2. EX1002, Fig. 2; Section VIII.E.1.c. Thorens788, when modified with Thorens231's mouthpiece housing, provides a cartomizer "body" (mouthpiece housing combined with cartridge) having a liquid storage portion 113 (the recited "structure") configured to hold liquid 115 (the recited "vaporizable liquid"). EX1004, 12:12-13 ("In the mouthpiece end 103, there is provided a ***liquid storage portion or cartridge 113 containing liquid 115***, a capillary wick 117 and a heating element in the form of a heating coil 119.") (emphasis added); *id.*, 12:19-25 ("Liquid 115 is transferred by capillary action from the cartridge 113 from one end of the wick 117 which extends from the cartridge to another end of the wick 117 which is surrounded by the heating coil 119…. The liquid in that end of the wick 117 is vaporized by the heating coil 119 to create a supersaturated vapour.").

NJOY Exhibit 1005.151

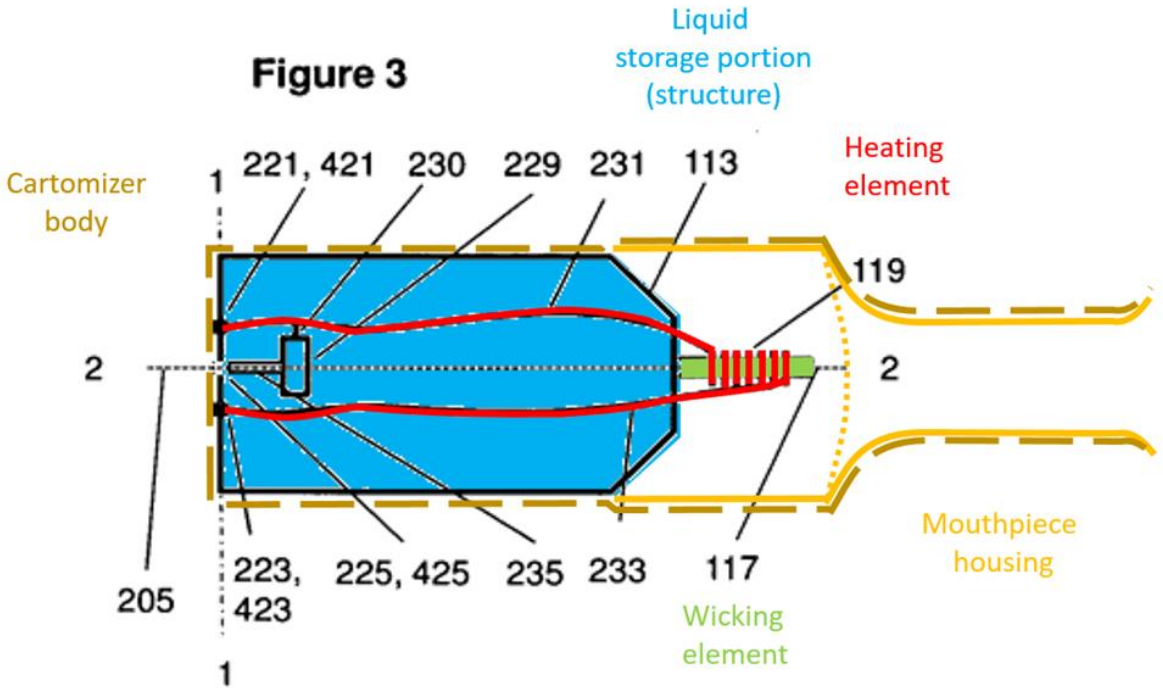

h. <u>[1.H] a wicking element provided within the body and at least partially in contact with the vaporizable liquid; and</u>

239. It is my opinion that Thorens788 discloses this limitation.

240. I understand that Petitioner has adopted the construction proposed by the Patent Owner in the related ITC Investigation: that the term "wicking element" should be given its plain and ordinary meaning, which it contends is "*e.g.*, any material through which liquid may be drawn via capillary action." I have applied this construction in my analysis below.

241. Thorens788 discloses a capillary wick 117 arranged to draw liquid from the liquid storage portion and transfer the liquid to the heating element for vaporization.

NJOY Exhibit 1005.152

> In a preferred embodiment of the invention, the smoking system comprises a liquid storage portion. Preferably, the capillary wick is arranged to be in contact with liquid in the liquid storage portion. In that case, in use, liquid is transferred from the liquid storage portion towards the heater by capillary action in the capillary wick. In one embodiment, the capillary wick has a first end and a second end, the first end extending into the liquid storage portion for contact with liquid therein and the at least one heater being arranged to heat liquid in the second end. When the heater is activated, the liquid at the second end of the capillary wick is vaporized by the heater to form the supersaturated vapour.

EX1004, 7:11-18.

> The capillary wick may have a fibrous or spongy structure. For example, the capillary wick may comprise a plurality of fibres or threads. The fibres or threads may be generally aligned in the longitudinal direction of the smoking system. Alternatively, the capillary wick may comprise sponge-like material formed into a rod shape. The rod shape may extend along the longitudinal direction of the smoking system. The structure of the wick forms a plurality of small bores or tubes, through which the liquid can be transported to the heater, by capillary action. The capillary wick may comprise any suitable material or combination of materials. Examples of suitable materials are ceramic- or graphite-based materials in the form of fibres or sintered powders. The capillary wick may have any suitable capillarity and porosity so as to be used with liquids of different physical properties such as density, viscosity, surface tension and vapour pressure. The capillary properties of the wick, combined with the properties of the liquid, ensure that the wick is always wet in the heating area.

EX1004, 7:32-8:7.

242. Thorens788 discloses that its wick has a "first end extending into the liquid storage portion for contact with liquid therein." EX1004, 7:15. Therefore, Thorens788 discloses that the wick is "provided within the body and at least partially in contact with the vaporizable liquid," as the claim recites.

NJOY Exhibit 1005.153

243. Concerning the construction proposed by Petitioner in the related Section 337 Investigation (but not adopted here), Thorens788 discloses that capillary wick 117 is "a plurality of fibres or threads" which transfers liquid by "capillary action." EX1004, 7:32-33 ("For example, the capillary wick may comprise a plurality of fibres or threads."); EX1004, 12:19-21 ("Liquid 115 is transferred by capillary action from the cartridge 113 from one end of the wick 117 which extends from the cartridge to another end of the wick 117 which is surrounded by the heating coil 119"). In light of this disclosure, it is my opinion that a POSA would have known this wick was a pliable bundle of fibers for drawing liquid by capillary action.

i. [1.I] a heating element provided within the body in contact with the wicking element and operable to heat the vaporizable liquid,

244. It is my opinion that Thorens788 discloses this limitation.

245. I understand that the Petitioner has adopted the construction proposed by the Patent Owner in the related ITC Investigation: that the term "heating element" should be given its plain and ordinary meaning, which it contends is "*e.g.*, conductive material shaped into a wire, coil, or flat ribbon that generates heat in response to current." I have applied this construction in my analysis below.

246. Thorens788 discloses that "the liquid storage portion may further comprise a heating element" which "[p]referably [] is integral to the liquid storage portion." EX1004, 1:35-36. The heating element is depicted in Figure 3, reproduced

NJOY Exhibit 1005.154

below. EX1004, 14:5-13 ("Referring now to Figure 3, this shows a detailed section taken through a liquid storage portion 113 according to an embodiment of the invention…. A second end of the second electrically conductive portion 233 is electrically connected to a second end of the heating element 119.").

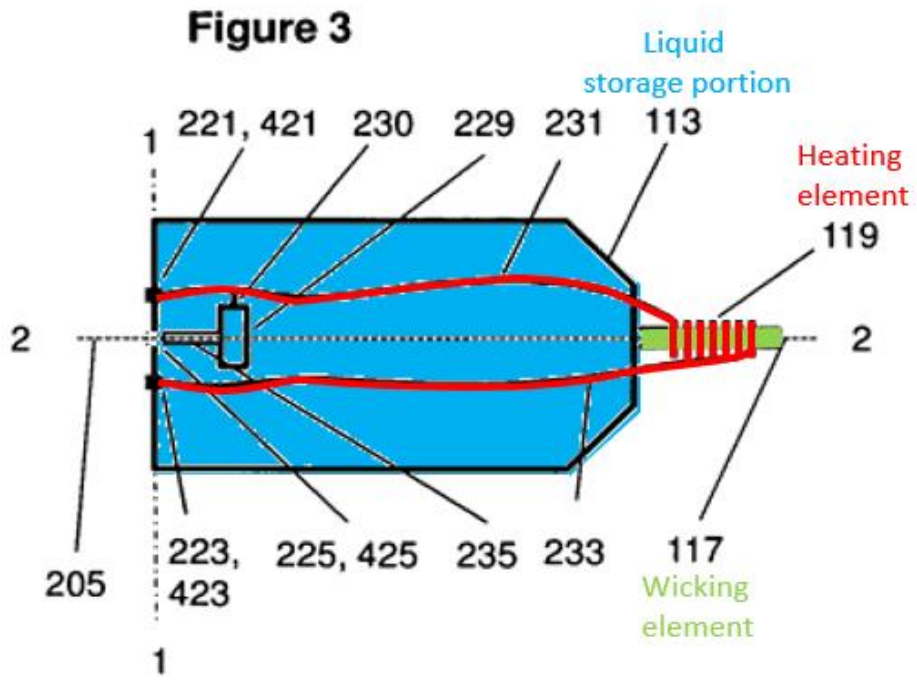

EX1004, Fig. 3

247. As I explained above, the heating element is "within the body," when the mouthpiece of Thorens231 is combined with Thorens788 as depicted above. *See* [1.F].

NJOY Exhibit 1005.155

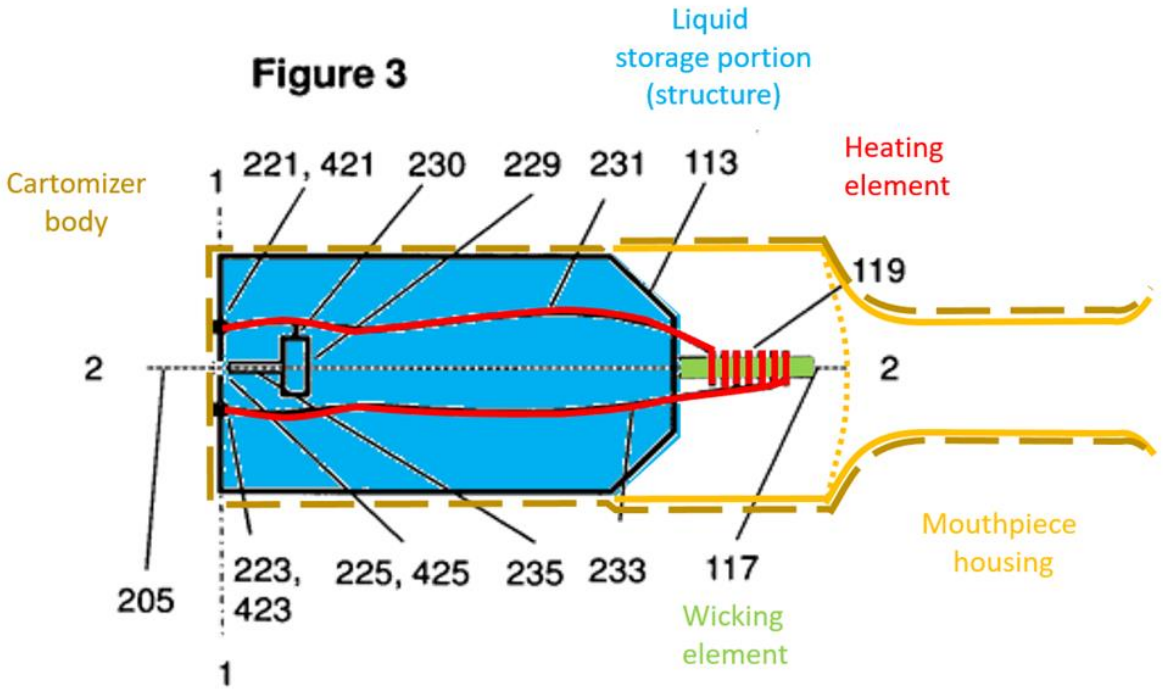

248. Thorens788 disclose that the heating element may be a coil in contact with the wick. EX1004, 8:29-31 ("The at least one heater may take any suitable form. For example, the at least one heater may take the form of a coiled heating element. For example, the heater may take the form of a wire wound coiled heating element. The coil of wire at least partially surrounds the wick."); EX1004, 8:34-36 ("The coil may extend fully or partially along the length of the capillary wick. The coil may extend fully or partially around the circumference of the capillary wick. In a preferred embodiment, the coil is in contact with the capillary wick.").

NJOY Exhibit 1005.156

249. Therefore, Thorens788 discloses a heating element under the construction adopted by the Petitioner, which is a "conductive material shaped into a wire, coil, or flat ribbon that generates heat in response to current."

250. Thorens788's heating element is also "operable to heat the vaporizable liquid," as the claim recites. Thorens788 discloses that the battery supplies electric current to heating element 119 which vaporizes the liquid received from the liquid storage portion. EX1004, 12:23-25 ("The battery 107 supplies electrical energy to the heating coil 119 to heat the end of the wick 117 surrounded by the heating coil. The liquid in that end of the wick 117 is vaporized by the heating coil 119 to create a supersaturated vapour."); 15:5-7 ("When a liquid storage portion is inserted into the aerosol generating system, electrical contacts 221, 223 on the liquid storage portion and two electrical contacts 211, 213 on the aerosol generating system 100 allow electrical energy to be transmitted to the heating element 119."); 6:22-23 ("In use, when the heater is activated, liquid provided by the liquid storage portion is vaporized by the heater to form a supersaturated vapour.").

j. <u>[1.J] wherein the wicking element is configured to deliver the vaporizable liquid to the heating element, and</u>

251. It is my opinion that Thorens788 discloses this limitation. *See* limitations [1.H], [1.I].

NJOY Exhibit 1005.157

252. Thorens788 discloses that "[in] use…[l]iquid 115 is transferred by capillary action from the cartridge 113 from one end of the wick 117 which extends from the cartridge to another end of the wick 117 which is surrounded by the heating coil 119." EX1004, 12:19-21.

k. <u>[1.K] wherein the entire heating element is disposed between the insertion end of the chamber and the base end of the chamber when the cartomizer is inserted into the chamber such that the outer shell protects the heating element.</u>

253. It is my opinion that Thorens788 discloses this limitation.

254. As I explained above, the aerosol generating system 100 (i.e., battery portion) of Thorens788 comprises a chamber 127 which receives the liquid storage portion 130 (i.e., cartomzier) containing a heating element 119. *See* [1.B], [1.C]. As shown below, when the liquid storage portion is inserted into the chamber 127, the entirety of the heating element 119 resides between the insertion and base ends of the chamber.

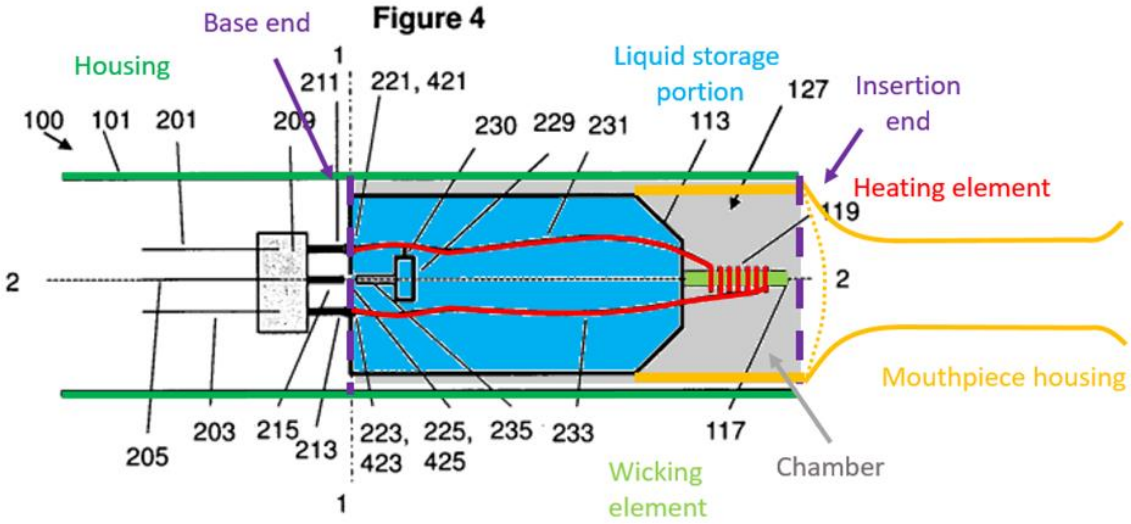

255. A POSA would have further understood that the housing 101 protects the heating element because provides and additional physical layer between the heating element and the outer environment.

3. Claim 5: The vaporizer of claim 1, wherein the plurality of charger electrical contacts are arranged linearly at the first end of the battery portion.

256. It is my opinion that Thorens788 and Levin in combination renders obvious this limitation.

257. As I discussed above, it is my opinion that Thorens788 and Levin in combination renders obvious a vaporizing device comprising a micro-USB charging port at the first end of the battery portion. *See* limitation [1.D]. Further, a POSA would have understood that micro-USB charging ports comprise a plurality of linearly arranged charger electrical contacts. *See* [Ground 1, claim 5].

NJOY Exhibit 1005.159

4. Claim 7: The vaporizer of claim 1, wherein the cartomizer further comprises a mouthpiece opposite an end of the cartomizer configured for insertion into the chamber.

258. It is my opinion that the combination of Thorens788 in view of Thorens231 renders obvious this limitation.

259. Thorens231 discloses that in use, a consumer inhales vapor from air outlet 211. EX1002, 7:7-12 ("The supersaturated vapor created is mixed with and carried in the air flow from the air inlets 115 towards the aerosol forming chamber 213. In the aerosol forming chamber 213, the vapor condenses to form an inhalable aerosol, which is carried towards the outlet 211 and into the mouth of a user."). A POSA would have understood that a consumer would place his or her lips around air outlet 211, and the area proximate to the outlet is a mouthpiece.

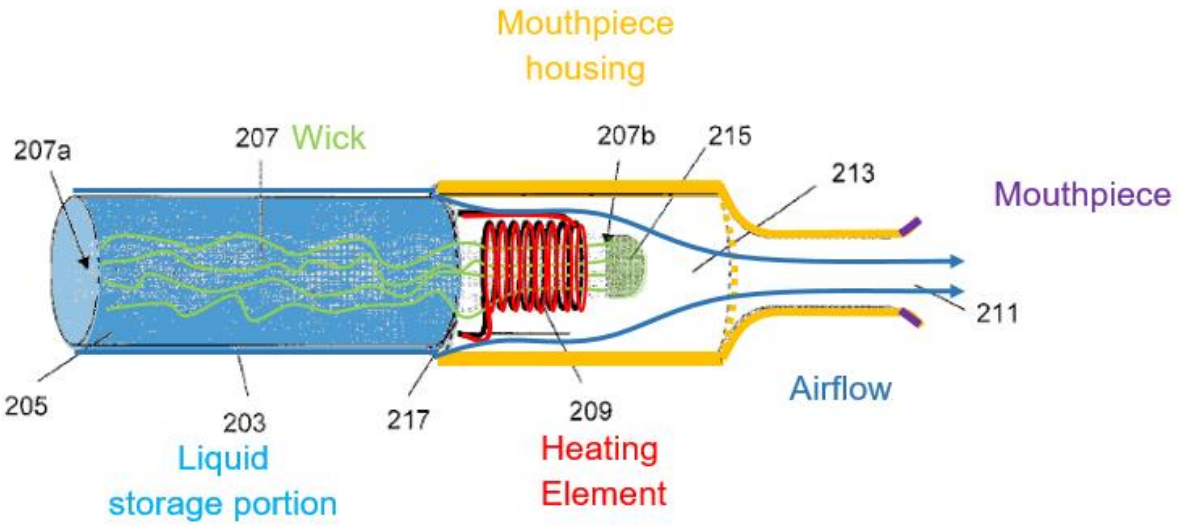

EX1002, Fig 2

NJOY Exhibit 1005.160

260. As shown below, Thorens788's device incorporating Thorens231's mouthpiece housing comprises the same mouthpiece opposite an end of the cartomizer configured for insertion into the chamber.

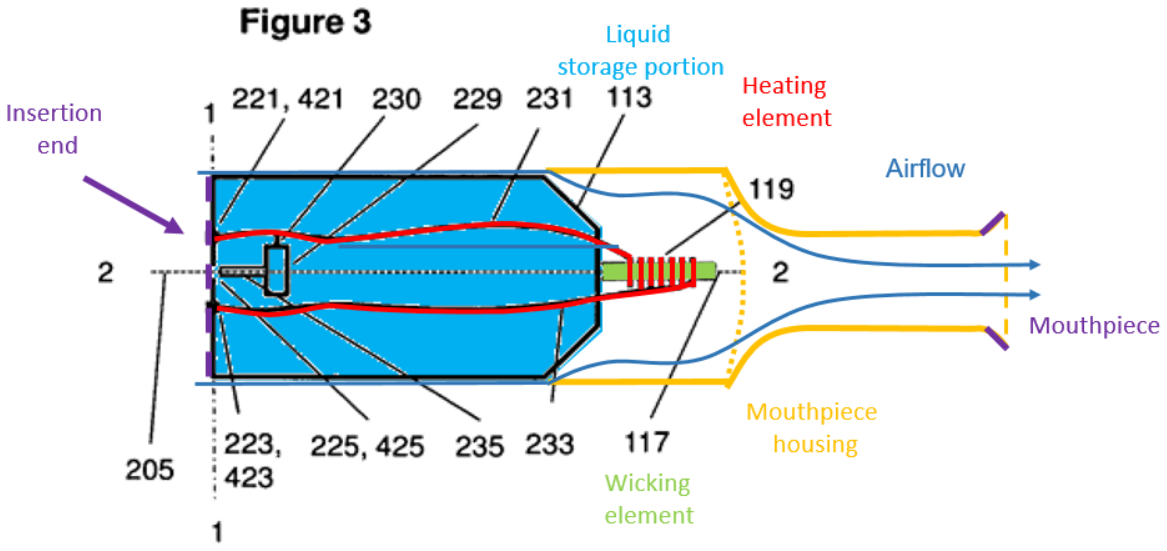

5. Claim 9: The vaporizer of claim 1, wherein the cartomizer further comprises electrical circuitry connected with the heating element.

261. It is my opinion that Thorens788 discloses this limitation.

262. I note that the '722 Patent describes "electrical circuitry" as anything that is operable to direct an electric current.

> the cartomizer including: an outer cartomizer shell, a holding structure provided within, and secured to, the outer cartomizer shell, the holding structure including a basin dimensioned to hold a vaporizable substance, a heating element provided within the basin operable to heat the vaporizable substance, cartomizer electrical contacts provided on the exterior of the cartomizer, **cartomizer electrical circuitry operable to direct an electronic current** between the cartomizer electrical contacts and the heating element, and a mouthpiece fluidly

NJOY Exhibit 1005.161

> communicable with the basin, the mouthpiece extending from the insertion end 108A of the chamber when the cartomizer is inserted in the chamber, wherein the heating element is activated by the current and is operable to heat the vaporizable substance to a vaporization temperature; a battery housed within the battery segment; battery electrical contacts provided between the base end 108B of the chamber and the battery segment, the battery electrical contacts positioned to contact the cartomizer electrical contacts when the cartomizer is inserted in the chamber; **battery electrical circuitry housed within the battery segment and operable to direct an electrical current** between the battery, the battery electrical contacts, the cartomizer electrical contacts, the heating element, and the inserted cartomizer.

’722 Patent, 3:67-4:24 (emphasis added).

263. Thorens788 discloses that its “heating coil 119 is connected to the electric circuitry via connections 121.” EX1004, 12:16-17. Thorens788 also discloses that the liquid storage portion 113 comprises electrical conductive portions 231 and 233 electrically connected to a first and a second end of the heating element. EX1004, 14:12-14 (“A second end of the first electrically conductive portion 231 is electrically connected to a first end of the heating element 119. A second end of the second electrically conductive portion 233 is electrically connected to a second end of the heating element 119.”). The electrical conductive portions “allow electrical energy to be supplied to the heating element 119 from a battery or other power source[.]” EX1004, 14:15-16. Thus, a POSA would have understood at least the electrically conductive portions be the recited “electrical circuitry connected with the heating element” within the meaning of the ’722 patent.

NJOY Exhibit 1005.162

6. Claim 10

a. **[10.A] A vaporizer comprising:**

264. *See* Ground 3, limitation [1.A].

b. **[10.B] a battery portion comprising: a battery housing segment;**

265. *See* Ground 3, limitation [1.B].

c. **[10.C] a cartomizer receiving segment defining a cartomizer chamber having an insertion end distal from the battery housing segment, [10.E] the cartomizer chamber further having a base end proximate to the battery housing segment,**

266. *See* Ground 3, limitation [1.C].

d. **[10.D] wherein an outer shell is commonly shared by the battery housing segment and the cartomizer receiving segment;**

267. *See* Ground 3, limitation [1.E].

e. **[10.E] a plurality of charger electrical contacts disposed at a first end of the battery portion opposite the insertion end of the cartomizer chamber, the insertion end of the cartomizer chamber being at a second end of the battery portion; and**

268. It is my opinion that Thorens788 and Levin in combination renders obvious this limitation.

269. As I discussed above with respect to limitation [1.D], the combination of Thorens and Levin renders obvious a vaporizer comprising a plurality of charger electrical contacts disposed at a first end of the battery portion opposite the insertion

end of the cartomizer, the insertion end of the cartomizer chamber being at a second end of the battery portion.

f. [10.F] at least one magnet of the battery portion, the at least one magnet of the battery portion in or proximate to the cartomizer chamber; and

270. It is my opinion that Thorens788 and Levin in combination renders obvious this limitation.

271. Thorens788 discloses a liquid storage portion (cartomizer) coupled to an aerosol generating system (battery portion). Levin discloses the use of magnets to affect coupling in e-cigarette vaporization devices. A POSA would have been motivated to adapt Thorens788's device to include magnets to provide coupling in view of Levin as set forth in Section VIII.E.1.b.

272. The magnets of the modified aerosol generating system would have been proximate the cartomizer chamber. *See* Section VIII.E.1.b.

g. [10.G] a cartomizer insertable into the cartomizer chamber at the insertion end, the cartomizer comprising:

273. *See* Ground 3, limitation [1F].

h. [10.H] a body including a structure configured to hold a vaporizable liquid;

274. *See* Ground 3, limitation [1.G].

NJOY Exhibit 1005.164

i. **[10.I] a wicking element provided within the body and at least partially in contact with the vaporizable liquid;**

275. *See* Ground 3, limitation [1.H].

j. **[10.J] a heating element provided within the body in contact with the wicking element and operable to heat the vaporizable liquid,**

276. *See* Ground 3, limitation [1.I].

k. **[10.K] wherein the wicking element is configured to deliver the vaporizable liquid to the heating element, and**

277. *See* Ground 3, limitation [1.J].

l. **[10.L] wherein the entire heating element is disposed between the insertion end of the cartomizer chamber and the base end of the cartomizer chamber when the cartomizer is inserted into the cartomizer chamber such that the outer shell protects the heating element; and**

278. *See* Ground 3, limitation [1.K].

m. **[10.M] a metal element disposed near a base end of the cartomizer for coupling with the at least one magnet of the battery portion.**

279. It is my opinion that Thorens788 and Levin in combination renders obvious this limitation.

280. As I discussed above, Thorens788 discloses coupling a cartomizer with a battery portion of a vaporizer. *See* limitations [1.B], [1.C], [1.F]. As I also discussed above, Levin discloses the use of magnetic coupling in e-cigarette

vaporizing devices. *See* Section VIII.E.1.b; EX1003, 20:51-60 ("In this embodiment, there are four magnets 5 situated at each corner of each of the proximal and distal grinder portions. The magnets 5 help hold the two grinder pieces together…"). In my opinion, a POSA would have been motivated to adapt Thorens788 to use Levin's magnets in Thorens's battery portion in or proximate to the cartomizer chamber to affect coupling, as I discuss above in Section VIII.E.1.b; *see* limitation [10.H].

281. Further, a POSA would have recognized that magnets are almost always metallic. Thus, a POSA would understand the magnets disposed near the base end of Thorens788's liquid storage portion to be the recited "metal element."

7. Claim 11: The vaporizer of claim 10, wherein the battery portion further comprises one or more battery electrical contacts in or proximate the cartomizer chamber of the cartomizer receiving segment.

282. It is my opinion that Thorens788 discloses this limitation.

283. Thorens788 discloses that the aerosol generating system (i.e., battery portion) comprises "[t]hree electrical connectors 211, 213, 215 are provided." EX1004, 13:14-15. As shown in Figure 4, the "corresponding electrical contacts 211, 213, 215, on the aerosol generating system 100" contact electrical contacts 221, 223, and 225 when the liquid storage portion is inserted into the chamber of the aerosol generating system. EX1004, 15:15-19 ("The electrical contacts 221 or 421, 223 or 423, 225 or 425, on the liquid storage portion 113 are arranged so that they

NJOY Exhibit 1005.166

contact corresponding electrical contacts 211, 213, 215, on the aerosol generating system 100 when the liquid storage portion 113 is inserted into the aerosol generating system 100.”).

284. A POSA would have understood that the electrical connectors 211, 213, 215 are located in or proximate the cartomizer chamber, as shown below.

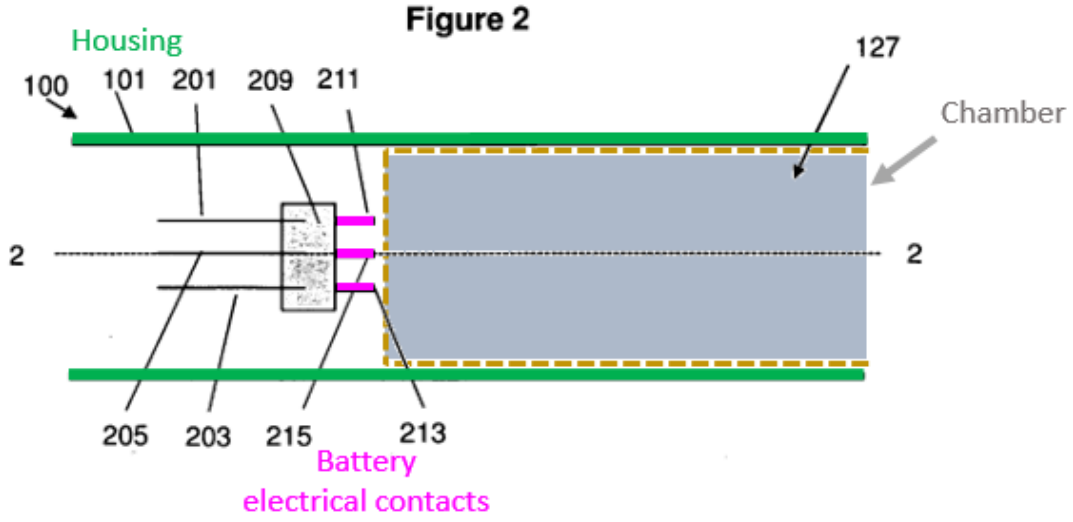

EX1004, Fig. 2

NJOY Exhibit 1005.167

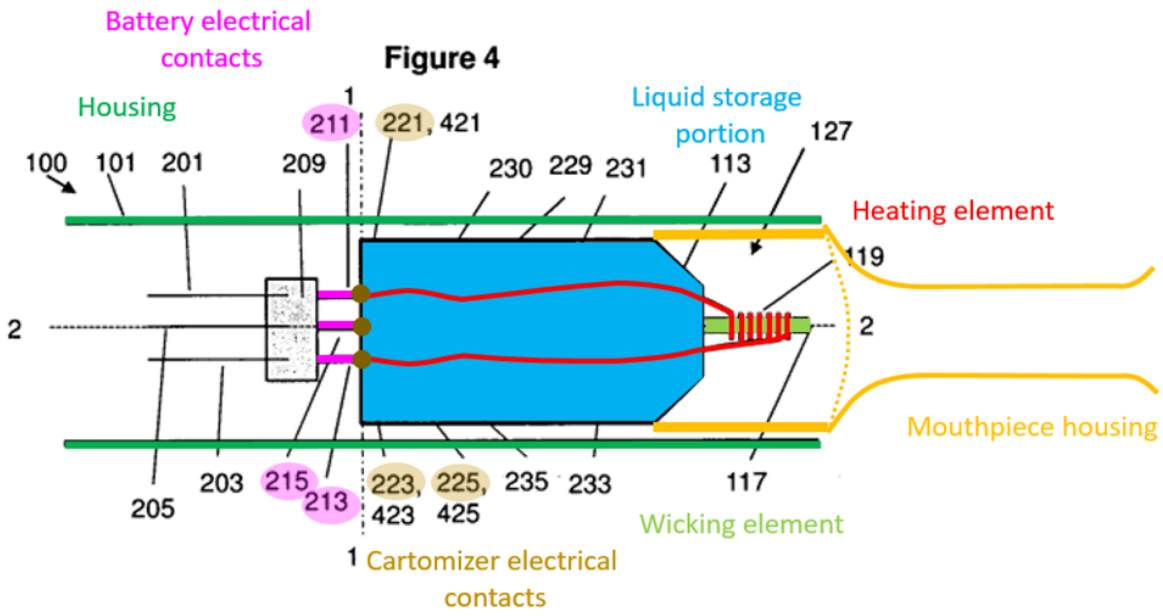

8. Claim 12: The vaporizer of claim 10, wherein the cartomizer further comprises one or more cartomizer electrical contacts for connecting with one or more battery electrical contacts in or proximate the cartomizer chamber.

285. It is my opinion that Thorens788 discloses this claim.

286. Thorens788 discloses three battery electrical contacts in or proximate the cartomizer chamber. *See* [11.A]. Thorens788 further discloses that its cartridge comprises three corresponding electrical contacts for connecting with the battery electrical contacts. EX1004, 15:16-19 ("The electrical contacts 221 or 421, 223 or 423, 225 or 425, on the liquid storage portion 113 are arranged so that they contact corresponding electrical contacts 211, 213, 215, on the aerosol generating system 100 when the liquid storage portion 113 is inserted into the aerosol generating system 100."); EX1004, 15:26-27 ("Further, the electrical contacts 221, 223, 225 are attached to the to the liquid storage portion 113."). Thorens788 also discloses that

"[t]he electrical contacts 221 or 421, 223 or 423…allow electrical energy to be supplied to the heating element 119 from a battery or other power source[.]" EX1004, 14:14-16.

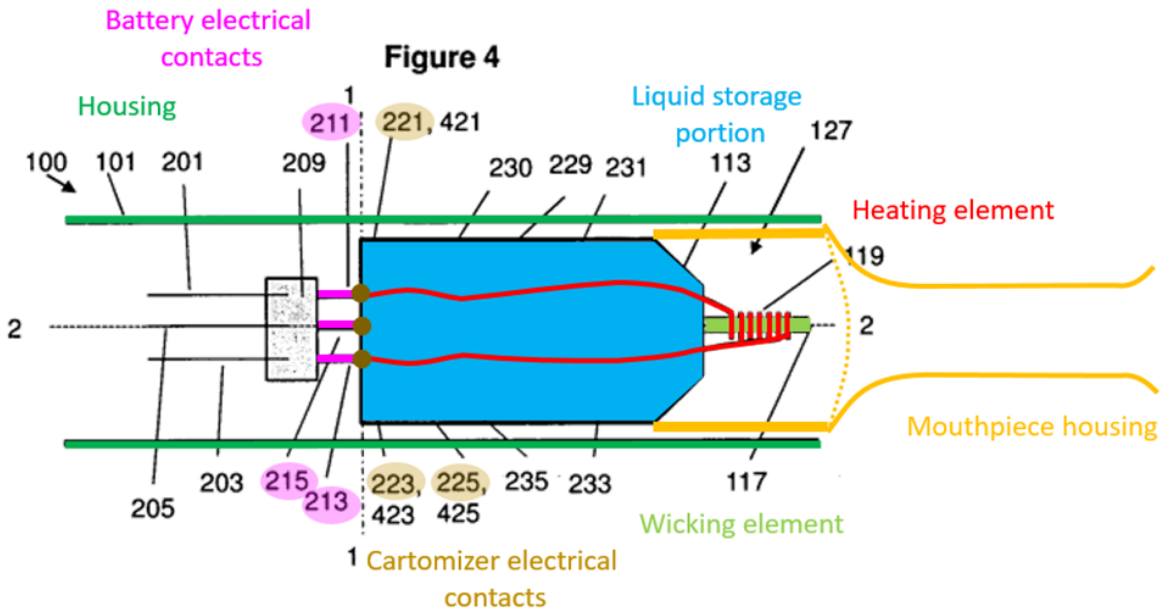

NJOY Exhibit 1005.169

Figure 5

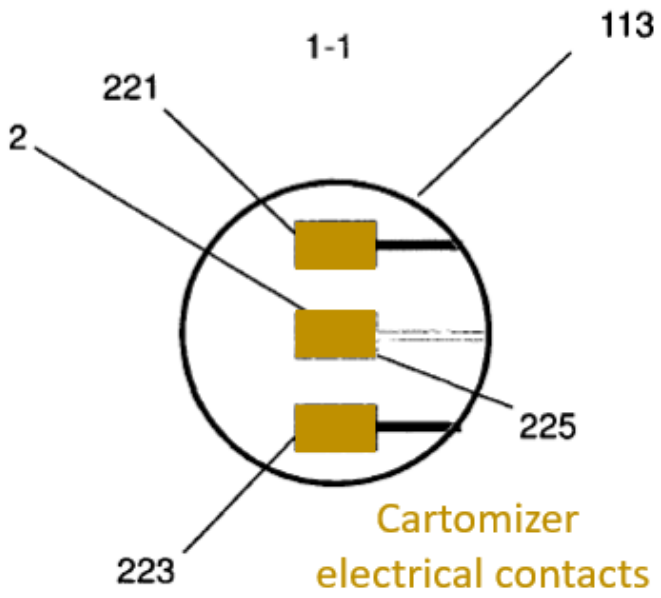

EX1004, Fig. 5

9. Claim 13: The vaporizer of claim 10, wherein the plurality of charger electrical contacts are arranged linearly at the first end of the battery portion.

287. *See* limitations [1.D], [5.A].

10. Claim 15

a. <u>[15.A] A vaporizer comprising:</u>

288. *See* limitation [1.A].

b. <u>[15.B] a battery portion comprising:</u>

289. *See* limitation [1.B].

NJOY Exhibit 1005.170

c. **[15.C] a plurality of charger electrical contacts disposed at a first end of the battery portion;**

290. *See* limitation [1.D].

d. **[15.D] a battery housing segment for housing a battery between the first end of the battery portion and a second end of the battery portion;**

291. *See* limitations [1.B], [1.C].

e. **[15.E] a cartomizer receiving segment defining a chamber having an insertion end at the second end of the battery portion and distal from the battery housing segment, the chamber further having a base end proximate to the battery housing segment,**

292. *See* limitations [1.B], [1.C].

f. **[15.F] wherein an outer shell is commonly shared by the battery housing segment and the cartomizer receiving segment; and**

293. *See* limitation [1.E].

g. **[15.G] one or more battery electrical contacts in or proximate the chamber of the cartomizer receiving segment; and**

294. *See* limitation [11.A].

h. **[15.H] a cartomizer insertable into the insertion end of the chamber, the cartomizer comprising:**

295. *See* limitation [1.F].

i. **[15.I] a body including a structure configured to hold a vaporizable liquid;**

296. *See* limitation [1.G].

j. **[15.J] a wicking element provided within the body and at least partially in contact with the vaporizable liquid;**

297. *See* limitation [1.H].

k. **[15.K] a heating element provided within the body in contact with the wicking element and operable to heat the vaporizable liquid,**

298. *See* limitation [1.I].

l. **[15.L] wherein the wicking element is configured to deliver the vaporizable liquid to the heating element, and**

299. *See* limitation [1.J]

m. **[15.M] wherein the entire heating element is disposed between the insertion end of the chamber and the base end of the chamber when the cartomizer is inserted into the chamber such that the outer shell protects the heating element; and**

300. *See* limitation [1.K].

n. **[15.N] one or more cartomizer electrical contacts for connecting with the one or more battery electrical contacts in or proximate the chamber.**

301. *See* limitation [12.A].

11. Claim 16: The vaporizer of claim 15, wherein the plurality of charger electrical contacts are arranged linearly at the first end of the battery portion.

302. *See* limitations [1.D], [5].

NJOY Exhibit 1005.172

12. Claim 18: The vaporizer of claim 1, the battery portion further comprising at least one magnet in or proximate to the chamber of the cartomizer receiving segment.

303. *See* limitation [10.H].

13. Claim 19: The vaporizer of claim 18, the cartomizer further comprising a metal element disposed near a base end of the cartomizer for coupling with the at least one magnet of the battery portion.

304. *See* limitation [10.O].

14. Claim 20: The vaporizer of claim 15, the battery portion further comprising at least one magnet in or proximate to the chamber of the cartomizer receiving segment.

305. *See* limitation [10.H].

15. Claim 21: The vaporizer of claim 20, the cartomizer further comprising a metal element disposed near a base end of the cartomizer for coupling with the at least one magnet of the battery portion.

306. *See* limitation [10.O].

F. Ground 4: Thorens788 in view of Thorens231, Levin, and Tucker

307. It is my opinion that Claims 14 and 17 of the ’722 Patent are unpatentable under 35 U.S.C. § 103 on the ground that they are rendered obvious by the combination of Thorens788, Thorens231, Levin, and Tucker. In my opinion, the combination of Thorens788, Thorens231, and Levin discloses every element of each of these claims except for a translucent window on the aerosol generating system of Thorens788, which is supplied by Tucker.

NJOY Exhibit 1005.173

1. Motivation to Combine

308. Thorens788, Thorens231, and Levin, in combination, discloses all the elements of claims 14 and 17 except for a window on or proximate to the shell. As I explained above, Tucker teaches providing a window to view the liquid remaining in the cartridge. *See* Section VIII.D.1. And because Thorens788's housing 101 covers the cartomizer, it would have been obvious to a POSA to provide a window in housing 101 to permit viewing the liquid remaining in the cartomizer.

309. First, I note that Thorens788, alone or in combination with Thorens231, discloses a transparent cartomizer. Thorens788 discloses that the cartridge 113 may optionally comprise a non-opaque container. EX1004, 7:23-27 ("The liquid storage portion is preferably a container….***Preferably***, the container is opaque, thereby limiting degradation of the liquid by light.") (emphasis added). While Thorens788 discloses that the container of the liquid storage portion is preferably opaque, a POSA would have understood the preference to mean that the container may be optionally not opaque (*i.e.*, translucent). Therefore, Thorens788 discloses this limitation.

310. Alternately, Thorens231 discloses that its cartridge may be made of glass. EX1002, 7:33-35 ("The cartridge 203 can be made from any suitable material. Examples include glass and plastic polymers such as PET or others used in the pharmaceutical or food industries."). A POSA would have understood glass to be a

NJOY Exhibit 1005.174

translucent material allowing viewing of the liquid material therein. Thus, Thorens788's device, when incorporating Thorens231's mouthpiece housing, provides a cartomizer body that comprises a translucent material configured to allow viewing of the fluid vaporizable substance.

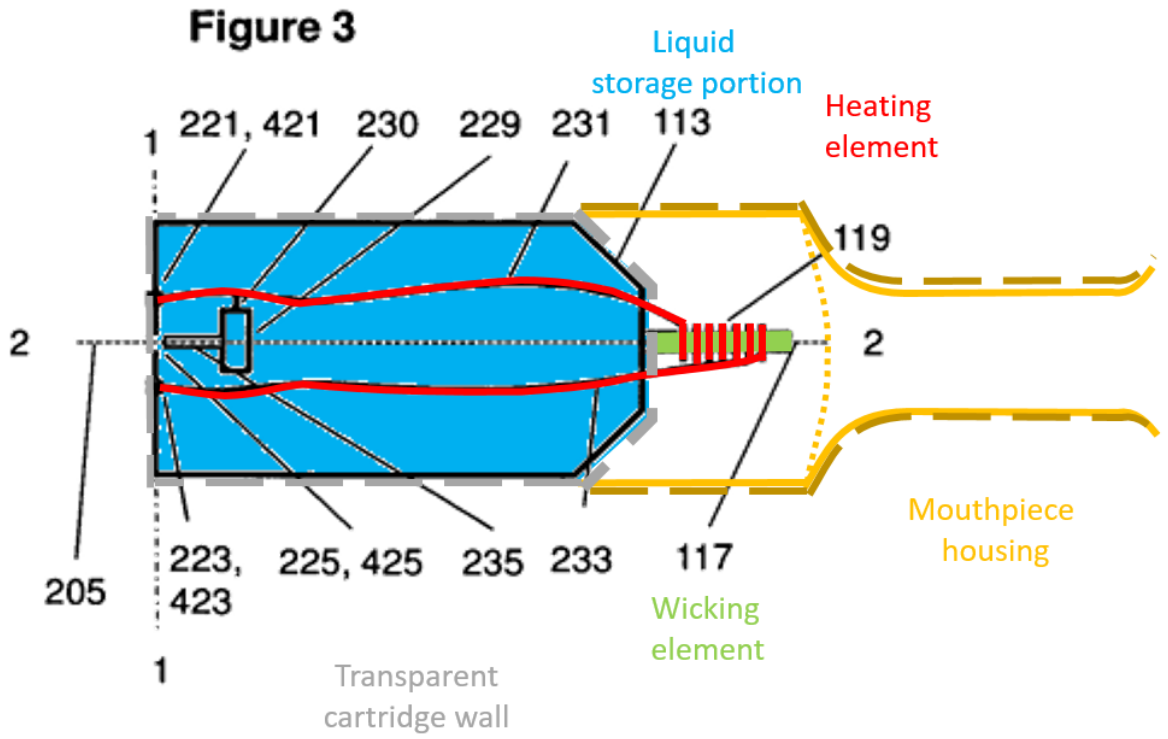

311. Separately, it would have been obvious to a POSA to use a translucent material to construct the Thorens788's cartomizer to allow a consumer to view the remaining liquid therein. *See, e.g.*, U.S. Patent No. 6,155,268 teaching that when a window is provided in the outer shell, the liquid container should be transparent. EX1052, 7:31-41 ("a transparent peeping window (not shown) can be formed in that portion of the side wall of the casing 12 which corresponds to the liquid container

32…to observe the remaining amount of the liquid flavor source 34 within the liquid container 32. ***In this case, the liquid container 32 itself must be formed of a transparent or translucent material***. Naturally, the remaining amount of the liquid flavor source 34 within the liquid container 32 can be observed through the peeping window so as to find the timing of replenishing the liquid flavor source 34.") (emphasis added).

312. Moreover, Thorens788 discloses a refillable liquid container, and a POSA would have been further motivated to use a transparent container so that a consumer may more easily refill the cartridge. EX1004, 7:29 ("Alternatively, the liquid storage portion may be refillable."). Indeed, Thorens788 discloses that a translucent cartridge container is a design choice from a finite number of choices. EX1004, 7:26-27 ("Preferably, the container is opaque, thereby limiting degradation of the liquid by light."), While Thorens788 expresses a preference for an opaque container to limit exposure to light, a POSA would have understood that the same function may be fulfilled by constructing the container using a tinted glass, which is translucent.

313. Thorens788 alone or in combination with Thorens231 discloses or renders obvious a transparent cartomizer which provides the benefit of allowing a consumer to view the liquid level within the cartridge, However, such benefit cannot be fully utilized in the Thorens788-Thorens231 combination because, as shown

NJOY Exhibit 1005.176

below, Thorens788's housing 101 extends to cover the entirety of the liquid container when the cartomizer is inserted into the aerosol generating system.

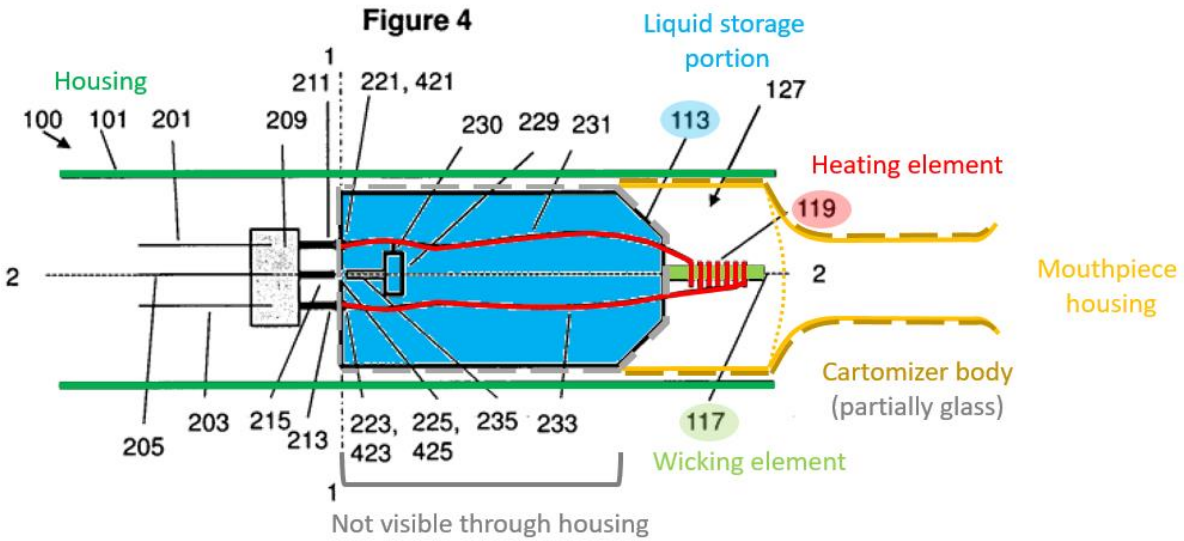

314. Accordingly, a POSA would have been motivated to take Tucker's teachings and include a window on Thorens788 outer shell, either as transparent plastic or a cutout "for facilitating to observe the amount of the internal liquid smoke, and prevent an empty burning of the heating wire after the liquid smoke has run out." EX1030, 4:33-35. The figure below illustrates the portion of Thorens788 that a POSA would be motivated to make transparent in order to view liquid in the liquid container.

NJOY Exhibit 1005.177

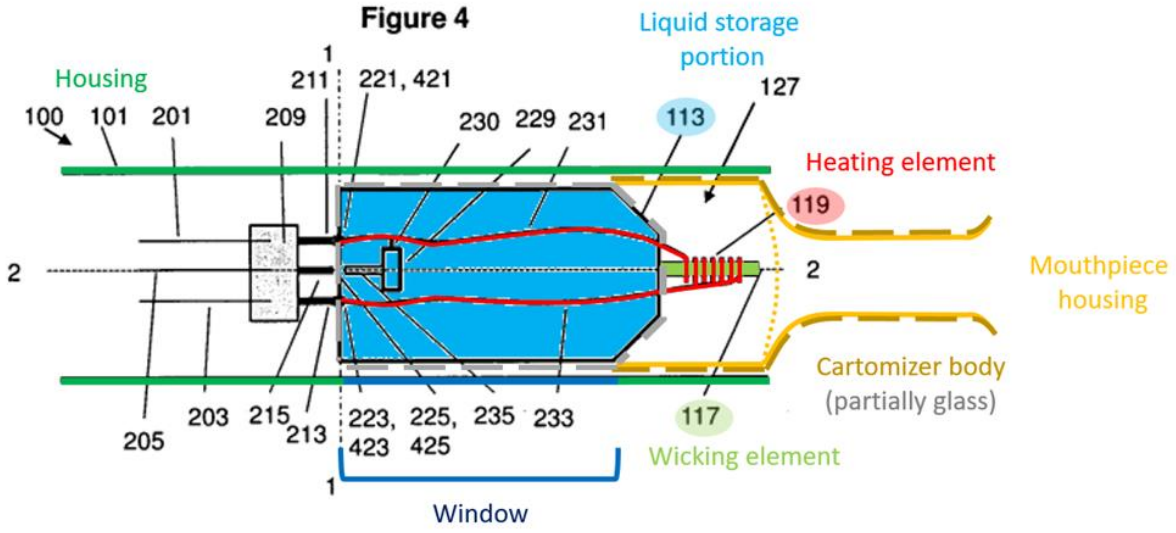

315. A POSA would have been so motivated for the same reasons I explained above in Section VIII.D.1. For example, without a window, a consumer might be misled about the remaining liquid amount because the visible transparent portion of the cartridge may suggest the cartridge is depleted. The consumer may replace a cartridge not needing replacement. Or, a consumer might assume liquid remains in the obscured portion, which may lead to the consumer using the device when the wick is desiccated, potentially resulting a "dry hit." *See* EX1055.003 ("Getting a dry hit isn't a great experience and it certainly isn't going to be great for your health as you are inhaling burnt cotton.")

316. Moreover, using a window to view liquid level was common in the prior art. U.S. Pat. No. 6,155,268 discloses a "peeping window" that permits viewing of a transparent e-vapor liquid container. EX1052, 7:31-36 ("a transparent peeping window (not shown) can be formed in that portion of the side wall of the casing 12

which corresponds to the liquid container 32…to observe the remaining amount of the liquid flavor source 34 within the liquid container 32.”).

317. A POSA would have had a reasonable expectation of successfully adding a Tucker’s transparent window to Thorens788’s housing 101. Such a modification simply requires construing a portion of the shell using a transparent or translucent material such as plastic, or cutting an opening on the chamber wall. Neither modification affects the functioning of Thorens788’s device. A POSA would also have had a reasonable expectation of using a translucent glass cartridge because Thorens231 is directed to substantially the same device and a glass cartridge would not interfere with the operation of the rest of the e-cigarette.

2. Claim 14: The vaporizer of claim 10, further comprising a window on or proximate to the shell, the window permitting viewing of the cartomizer when the cartomizer is inserted into the cartomizer chamber.

318. It is my opinion that Thorens788, Thorens231, and Levin in combination renders obvious claim 10. *See* [Ground 3, claim 10]. Thorens788, Thorens231, Levin, and Tucker render obvious this limitation.

319. As I discussed above in Section VIII.F.1, it would have been obvious, in view of the teachings of Tucker, to modify Thorens788’s aerosol generating system such that it comprises a transparent window permitting viewing of the cartomizer when the cartomizer is inserted into the cartomizer chamber.

NJOY Exhibit 1005.179

3. Claim 17: The vaporizer of claim 15, further comprising a window on or proximate to the shell, the window permitting viewing of the cartomizer when the cartomizer is inserted into the chamber.

320. *See* Ground 3, claim 15; Ground 4, claim 14.

IX. The ’981 Patent

A. The Claims

321. I understand that the petition challenges claims 1, 5, 8-11, and 13-18 of the ’981 Patent. Independent claim 1 of the ’981 patent is directed to an e-cigarette device comprising a cartomizer and a battery portion, wherein the battery portion includes a chamber for receiving the cartomizer, and the cartomizer comprises a body for holding a vaporizable liquid, a heating element for vaporizing the liquid, and a wicking element for transporting the liquid to the heating element.

NJOY Exhibit 1005.180

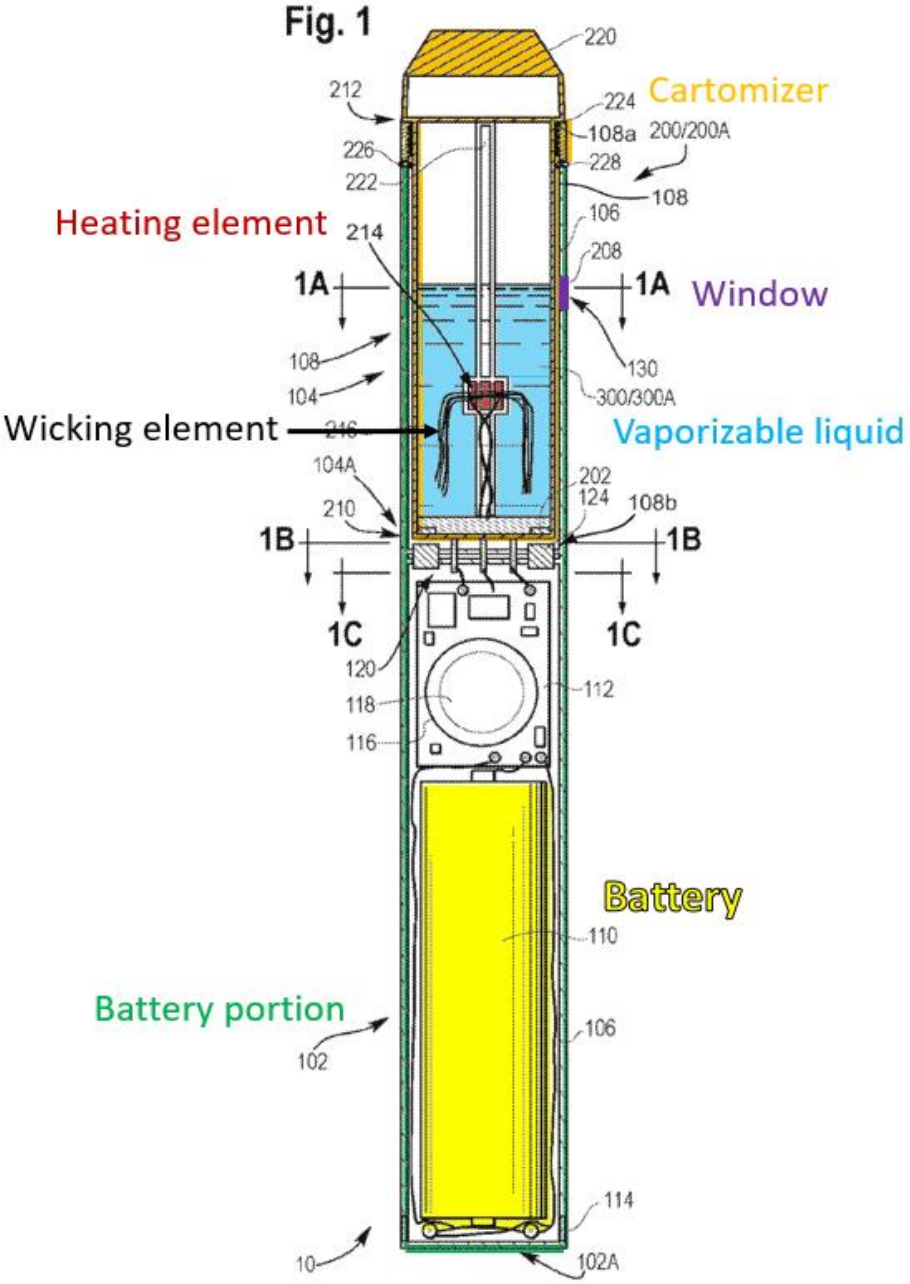

’981 Patent, Fig. 1

NJOY Exhibit 1005.181

322. As I explain in this Declaration, a POSA, in and prior to 2013, would have understood that there was nothing inventive about this system, which was well known in the art at the time. Claim 1 is reproduced below:

> 1. A vaporizer device comprising:
>
> a battery portion having an outer shell and a chamber defined by the outer shell; and
>
> a cartomizer having a mouthpiece end and an insertion end disposed opposite the mouthpiece end, the cartomizer comprising:
>
> a cartomizer body having a volume defined therein, the volume configured to hold a fluid vaporizable substance, wherein at least a portion of the cartomizer body comprises a translucent material configured to allow viewing of the fluid vaporizable substance, wherein the cartomizer body is configured for insertion into the chamber such that at least part of the volume is positioned in the chamber when the cartomizer body is inserted into the chamber;
>
> a heating element and a wicking element within the cartomizer body;
>
> an inhalation tube in fluid communication with the heating element and the wicking element;
>
> a mouthpiece at or proximate to the mouthpiece end, the mouthpiece in fluid communication with the inhalation tube; and
>
> a plurality of cartomizer electrical contacts on an exterior of the insertion end, wherein the plurality of cartomizer electrical contacts is positioned to contact a plurality of battery electrical contacts at a base end of the chamber when the cartomizer body is inserted into the chamber.

NJOY Exhibit 1005.182

B. Prosecution History

323. I have been informed by Counsel that the application that resulted in the ’981 Patent, U.S. Patent Application No. 17/095,567, was filed on November 11, 2020 by Verleur Products LLC (“the Applicant”). ’981 Patent File History, .007. I understand that during prosecution, the Applicant made certain amendments, remarks, and additions to the claims, which are summarized below.

324. During prosecution, the Applicant amended those claims to distinguish two prior art references – U.S. Patent Publications Nos. 2013/0228191 (“Newton”) and 2012/0199663 (“Qiu”). ’981 Patent File History, [3/10/2022 Rejection] – on the basis that neither Newton nor Qui disclosed a cartomizer receiving chamber. ’981 Patent File History, .229-231. Applicant further distinguished Qui on the basis that it did not disclose a cartridge body comprising a translucent material. ’981 Patent File History, 232.

325. On October 21, 2022, the Examiner issued an advisory action, indicating that pending independent claim 24 would be anticipated by U.S. 2013/0037041 (“Worm”), and suggested that incorporating the subject matter of dependent claim 26 into claim 24 would overcome Worm. ’981 Patent File History, .278. Applicant added to claim 24 the limitation “wherein the cartomizer electrical contacts are on an exterior of the cartomizer body.” ’981 Patent File History, .300-301.

NJOY Exhibit 1005.183

326. The ’981 issued on March 21, 2023. ’981 Patent at (45). Pending claims 10 and 24 were renumbered as issued claims 1 and 13, respectively. ’981 Patent File History, .316.

C. Ground 1: Liu783 in view of Liu438 and further in view of the knowledge of a POSA.

327. It is my opinion that claims 1, 5, and 13-16 of the ’981 Patent are unpatentable under 35 U.S.C. § 103 on the ground that they are rendered obvious by Liu783 and Liu438 in combination in view of the knowledge of a POSA.

1. Motivation to Combine

a. <u>Transparent Cartridge</u>

328. Liu783 discloses that its electronic atomizer containing vaporizable liquid is replaceable (i.e., disposable):

> An object of the present invention is to provide an electronic cigarette having a connector for magnetic connection, to decrease manufacture and use cost of the electronic cigarette, and **facilitate the installation, detachment and replacement of the electronic cigarette**.
>
> ***
>
> To achieve the above object, the present invention provides an electronic cigarette having a connector for magnetic connection, comprising a sucking rod and a power rod detachably connected with the sucking rod, wherein, the sucking rod comprises **a replaceable atomizer** and a connector for connecting the atomizer and the power rod and transporting electricity of the power rod to the atomizer
>
> ***
>
> With the above technical solution, the electronic cigarette having a connector for magnetic connection of the present invention has the following technical advantages: firstly, the atomizer and the connector

NJOY Exhibit 1005.184

> are independently manufactured, **when the liquid smoke is used out, it is only required to replace the atomizer instead of the connector, this can save manufacture and use cost**; secondly, the first connecting mechanism in the atomizer is inserted into the connector, and magnetically connected with the second connecting mechanism therein, assembly and detachment of the atomizer and the connector become very convenient[.]

See EX1010, [0003] (emphasis added), [0045] (emphasis added), [0019] (emphasis added).

329. Liu783, however, does not disclose any means for viewing the liquid remaining in the cartomizer. Liu438, which shares the same inventor as Liu783, teaches that the use of a transparent liquid cartridge can allow observation of the remaining liquid available for vaporization. *See* EX1013, [0046] ("The sucking cylinder 1 is a wholly transparent shell or at least partially transparent, or at least a portion thereof where the liquid smoke compartment 11 is configured is transparent, to facilitate to observe the amount of the liquid smoke in the liquid smoke compartment 11.")

330. In my opinion, a POSA would have been motivated to provide a means for allowing the consumer to determine whether the liquid with the atomizer was depleted. Determination of the liquid level serves as a convenient indicator of when the cartridge needs replacing, as Liu783's inventor has acknowledged elsewhere. *See e.g.*, EX1012, 5:49-52 (Understandably, the first sleeve 51 and the second sleeve 52 can be transparent, and through the transparent first sleeve 51 and second sleeves 52 ***it could be convenient for observing the smoke tar amount***) (emphasis added).

NJOY Exhibit 1005.185

Further, visual indication that the cartridge is nearly depleted serves as an important safety measure. For example, if the consumer takes a drag on depleted e-cigarette, the consumer may get a "dry hit," which is a super-heated blast of air. EX1055.003; EX1038, 4:58-61 ("In order to facilitate observing the usage and balance of the e-liquid in the cartridge 1, and avoiding phenomenon of the e-liquid dryout in the cartridge 1, the cartridge 1 is made of transparent plastic material").

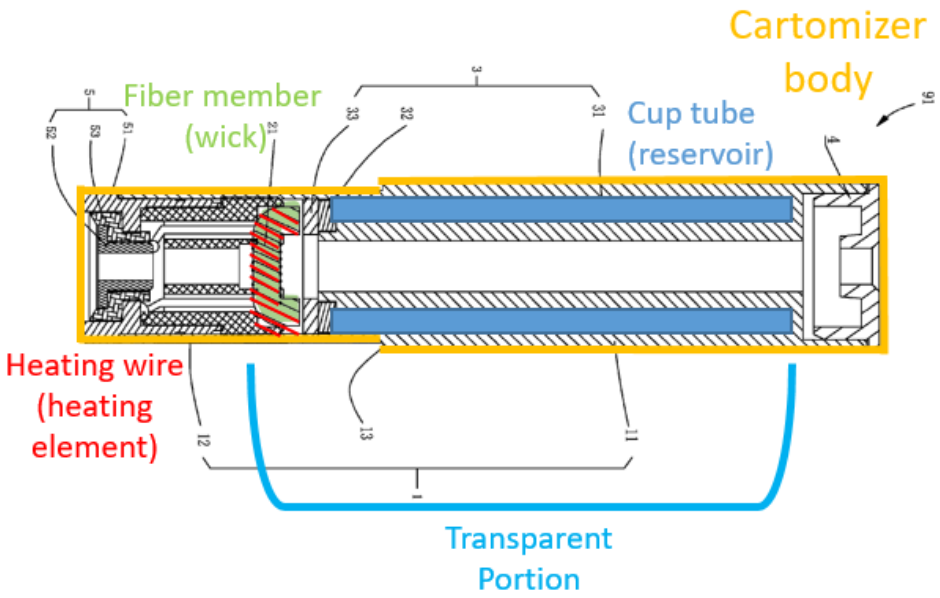

Modified EX1010, Fig. 5

331. In my opinion, a POSA would have had a reasonable expectation of success in modifying Liu783's cartridge to be transparent. This is evident by the fact that transparent cartridges were well known in the art. *See, e.g.*, EX1013, [0046] (teaching a transparent cartridge "to facilitate to observe the amount of the liquid smoke in the liquid smoke compartment 11."); EX1002, 7:34-35 (disclosing a glass

NJOY Exhibit 1005.186

cartridge); EX1031, 4:22-24 (disclosing a cartridge having a translucent window). In my opinion, using transparent materials for Liu783's sucking cylinder (i.e. cartridge) would have been a simple modification, especially in light of the same inventor's teaching and use of transparent or translucent materials in Liu483. The use of transparent materials would not require the modification of any other components and would not impede the operation of the device.

b. <u>Battery Housing Integrated With Connection</u>

332. Liu783 discloses a three-piece design: a battery component, a cartomizer component, and a connector for connecting the two. To the extent that it is argued that Liu738's battery component and connector do not share a common housing or shell, it is my opinion that a POSA would have found it obvious. This is evident by the many teachings in the prior art that e-cigarette connector components can be formed integrally with battery portions. For example, U.S. Pat. App. 2014/0261495 (EX1035) teaches a connector "which may comprise a portion of the control body [battery portion]." EX1035, [0092]; *see also e.g.*, EX1022, [0046] (teaching a two-piece e-cigarette, which improves upon prior-art three-piece e-cigarettes by having "a superior aesthetic appearance"); EX1036, 3:46-49 ("…an adaptor connecting the two portions [of an e-cigarette]…may be part of the battery portion, part of the cartomizer, or a separate component.").

NJOY Exhibit 1005.187

333. In my opinion, a POSA would have been motivated to adapt Liu783 to include an integrated battery/connector component for several reasons. First, integrating the battery portion and connector reduces the number of total components needed in the device. Having less components reduces the complexity and expense of manufacturing a device. Second, whether the connector is a separate component or integrated with the battery component is a matter of design choice. EX1036, 3:46-49 ("…an adaptor connecting the two portions [of an e-cigarette]…may be part of the battery portion, part of the cartomizer, or a separate component."). Third, a POSA would have recognized that an integrated connector and battery component provides benefits to the consumer. For instance, with an integrated component, the consumer has fewer pieces to assemble and/or misplace. Fourth, integrating the connector with the battery component, decreases the possibility that the consumer can damage the device during assembly and disassembly. In contrast, if the connector is a separate piece, removing the connector from the battery component may expose the batteries' electrodes or other internal components that would otherwise be protected with the integrated design.

334. In my opinion, a POSA would also have had a reasonable expectation of success in integrating Liu783's battery portion and connector. In Liu783's design, the connector component simply functions as an extension of the battery component. Integration with the battery component would not interfere with the operation of

NJOY Exhibit 1005.188

either component. Indeed, Liu783 only contemplates replacing the cartomizer after assembly. EX1010, [0019] ("the atomizer and the connector are independently manufactured, when the liquid smoke is used out, ***it is only required to replace the atomizer instead of the connector***, this can save manufacture and use cost[.]") (emphasis added). Further, it was well-known and common practice for the battery component to connect directly to the atomizer. Indeed, another patent application listing the same inventor as Liu783, U.S. Pat. App. 2014/0190502 (EX1025), discloses a one-piece power shell 91 containing a battery and a chamber for receiving a cartomizer (inhaling shell 90), as shown in the figure below. EX1025, [0028] ("the inhaling shell 90 and the power shell 91 is connected with each other as a whole via magnetic attraction").

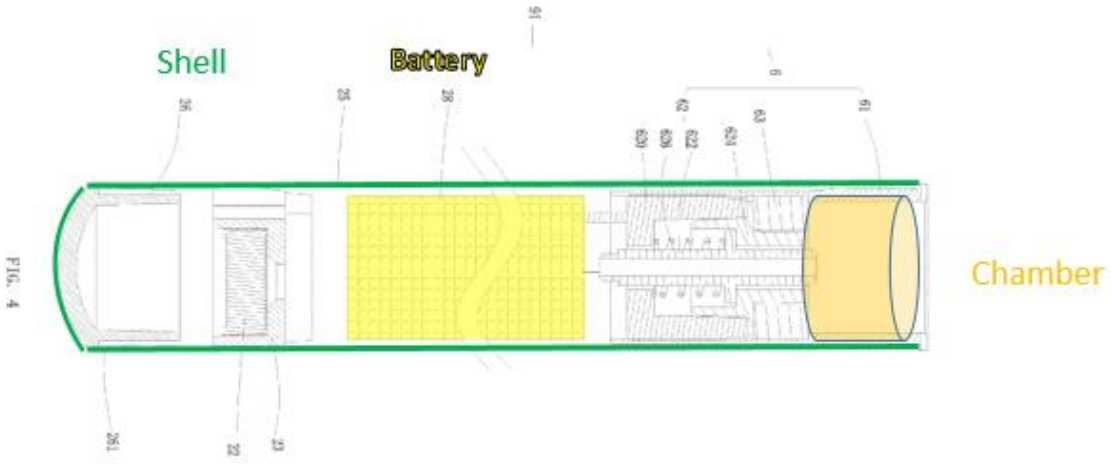

EX1025, Fig. 4

NJOY Exhibit 1005.189

2. Claim 1

a. [1.A] A vaporizer device comprising:

335. It is my opinion that Liu783 discloses this limitation.

336. Liu783 discloses an electronic cigarette. EX1010, [0001] ("This invention relates to an electronic cigarette field, and particularly to an electronic cigarette having a connector for magnetic connection.").

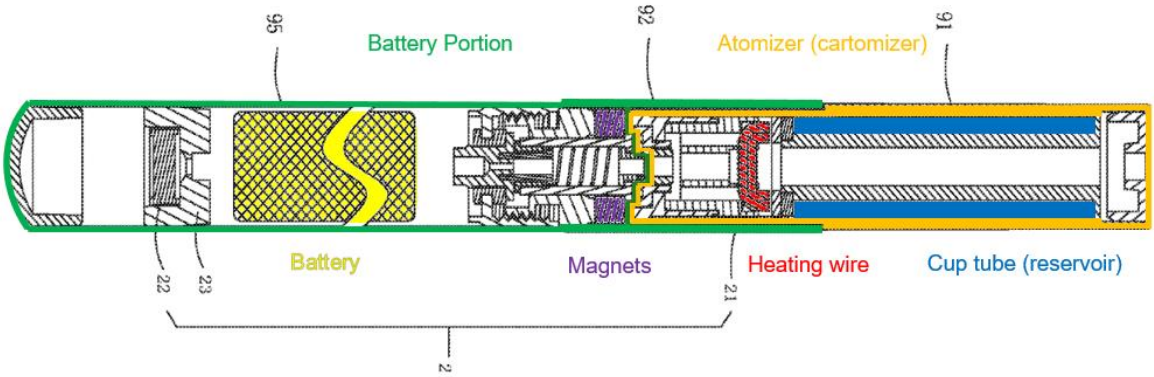

EX1010, Fig. 3

337. The electronic cigarette comprises heating wire 211 for vaporizing liquid. EX1010, [0034] ("The atomizing mechanism 21 is for transforming the liquid smoke into smog, and comprises a heating wire 211…"). Therefore, Liu783's electronic cigarette is a vaporizing device.

b. [1.B] a battery portion having an outer shell and a chamber defined by the outer shell; and

338. It is my opinion that Liu783 discloses and renders obvious this limitation.

NJOY Exhibit 1005.190

339. Liu783 discloses power rod 95 containing battery 955 and having end cap 956 joined to connector 92 (collectively the outer shell of the battery portion). EX1010, [0043] ("The power rod 95 is configured with a storage battery 955…"); [0043] ("The power rod 95 has its [*sic*] another end configured with an end cap 956…"); [0004] ("the connector has its one…end detachably connected with the power rod."); [0043] ("the power rod 95 [has] end connected with the connector 92 [] configured with an inner thread joint 951 mating with the outer thread joint[.]").

NJOY Exhibit 1005.191

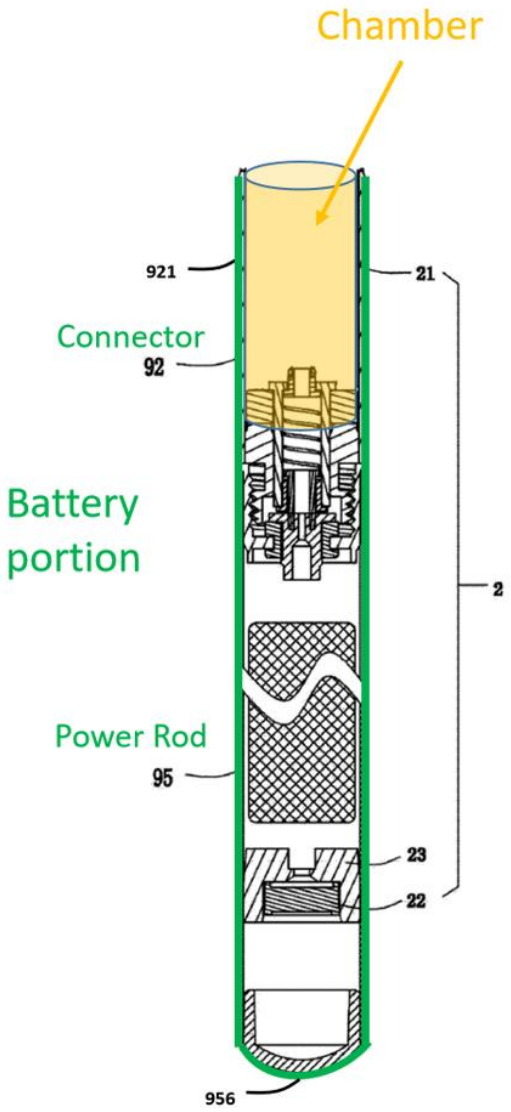

Liu783's Power Rod and Connecter

340. A POSA would understand the combined power rod 95 and connector 92 to be the recited "battery portion," as it contains the battery and chamber defined by an outer shell. I note that Liu783 does not contemplate disassembling the connector from the power rod once connected. Only the cartomizer is removed when the liquid is used up. EX1010, [0019]. Moreover, even the '981 Patent itself

NJOY Exhibit 1005.192

contemplates that the battery portion may comprise multiple segments. ’981 Patent, 5:5-7 (“In another embodiment… the vaporizer may include a shell having a battery segment and a cartomizer receiving segment[.]”).

341. To the extent the Board determines that this limitation requires a unitary outer shell, it is my opinion that it would have been obvious to a POSA to modify Liu783 in view of the knowledge of a POSA as discussed in Section IX.C.1.b.

c. [1.C] a cartomizer having a mouthpiece end and an insertion end disposed opposite the mouthpiece end, the cartomizer comprising:

342. It is my opinion that Liu783 discloses this limitation.

343. Liu783 discloses atomizer 91 (the cartomizer) comprising atomizing mechanism 21 (the heater assembly) and liquid smoke cup 3 having cup tube 31 (the liquid reservoir) for storing liquid.

NJOY Exhibit 1005.193

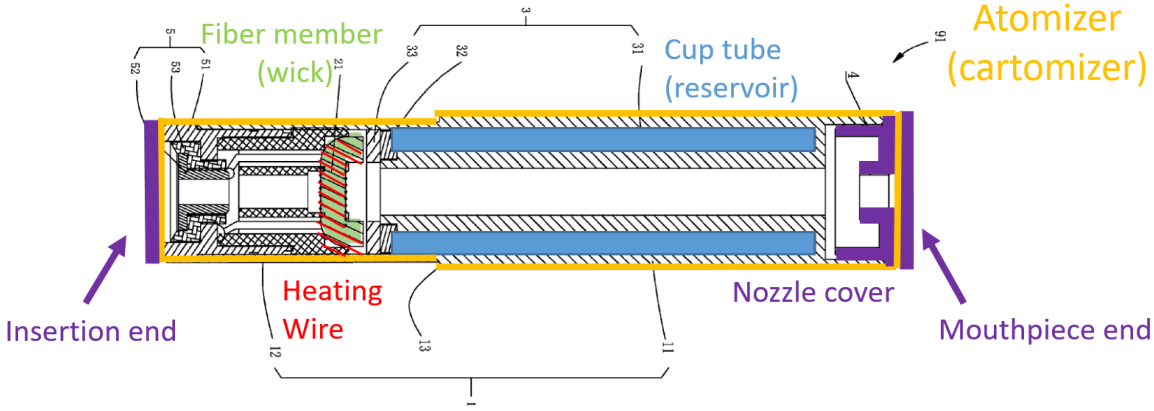

EX1010, Fig. 5

344. Accordingly, a POSA would understand atomizer 91 to be the recited "cartomizer," at least because it has both liquid storage and an atomizer. Moreover, atomizer 91 is a replaceable component releasably engaged with the shell. *See* EX1010, [0004] ("the present invention provides an electronic cigarette having…a replaceable atomizer").

345. Liu783's atomizer 91 (the cartomizer) further includes nozzle cover 4. A POSA would have understood that a consumer places his or her mouth on the nozzle cover to inhale vapor, and therefore would have considered the nozzle cover to be a recited mouthpiece. EX1010, [0044] ("[Vapor] finally flows out of the sucking rod 90 via the vent of the nozzle cover 4."). The insertion end of atomizer 91 is also opposite nozzle cover 4. EX1010, [0031] ("The nozzle cover 4 and the first connecting mechanism 5 are respectively installed at opposite ends of the

NJOY Exhibit 1005.194

sucking cylinder 1."); [0030] ("the atomizer 91 and the connector 92 are magnetically connected in a manner of one inserting into another.")

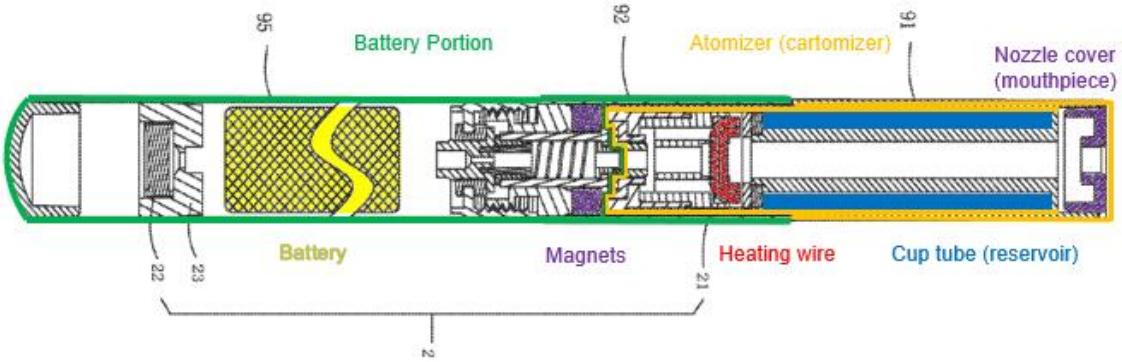

EX1010, Fig. 3.

d. <u>[1.D] a cartomizer body having a volume defined therein, the volume configured to hold a fluid vaporizable substance,</u>

346. It is my opinion that Liu783 discloses this limitation.

347. Atomizer 91 (the cartomizer) has a body defined by "a hollow tubular-shaped sucking cylinder 1." EX1010, [0031]. Cylinder 1 comprises liquid smoke cup 3 having cup tube 31 (reservoir with defined volume) for storing liquid. *See* [0035] ("The liquid smoke cup 3 comprises a cup tube 31 for storing the liquid smoke and a liquid guiding component for guiding the liquid smoke in the cup tube 31 to the atomizing mechanism 21 for atomization of the liquid smoke.").

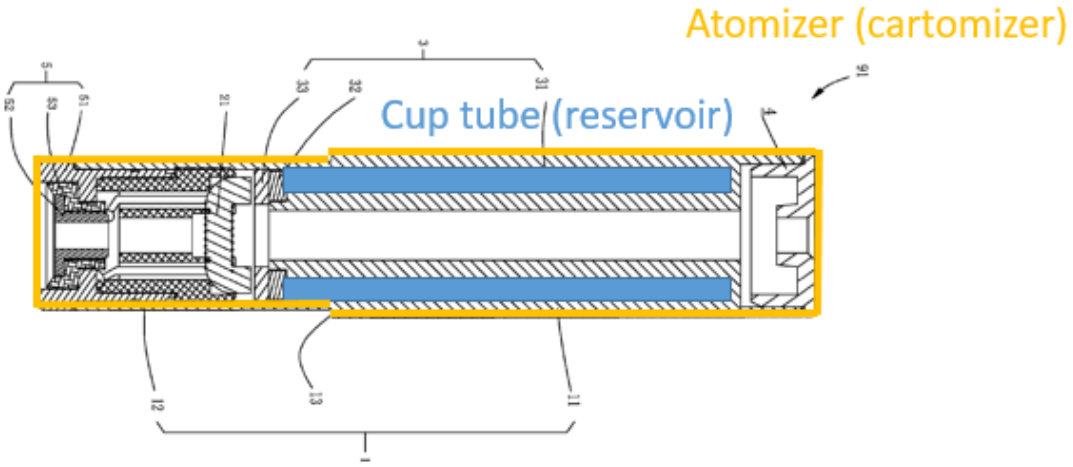

EX1010, Fig. 5

e. <u>[1.E] wherein at least a portion of the cartomizer body comprises a translucent material configured to allow viewing of the fluid vaporizable substance,</u>

348. It is my opinion that Liu783 and Liu438 in combination renders obvious this limitation. As discussed in Section IX.C.1.a, it would have been obvious to modify Liu783's sucking cylinder 1 in view of Liu438 such that at least a portion of the sucking cylinder comprises a translucent material configured to allow viewing of the liquid smoke contained within.

NJOY Exhibit 1005.196

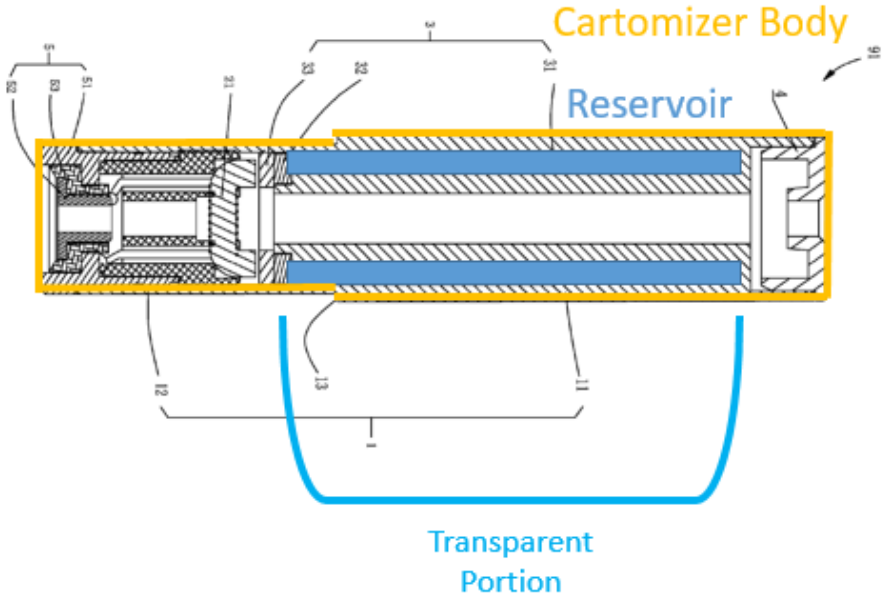

EX1010, Fig. 5

f. <u>[1.F] wherein the cartomizer body is configured for insertion into the chamber such that at least part of the volume is positioned in the chamber when the cartomizer body is inserted into the chamber;</u>

349. It is my opinion that Liu783 discloses this limitation.

350. Atomizer 91 (the cartomizer) is configured for insertion into the chamber of connector 92. EX1010, [0031] ("The sucking cylinder 1 comprises a main portion 11 exposed from the connector 92 and an inserting portion 12 inserted into the connector 92[.]"); [0030] ("the atomizer 91 and the connector 92 are magnetically connected in a manner of one inserting into another.").

351. When atomizer 91 is inserted into connector 92, a portion of liquid smoke cup 3 (the liquid reservoir) is positioned within the chamber of connector 92, as illustrated below:

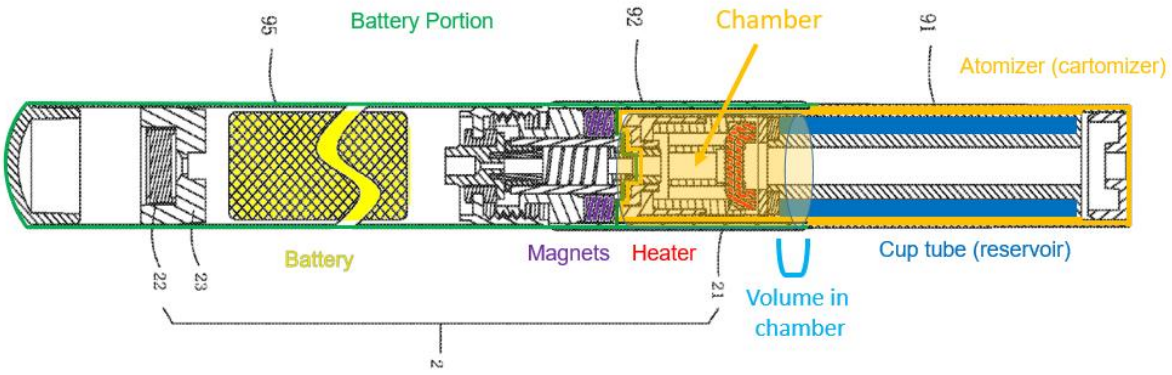

EX1010, Fig. 3

g. <u>[1.G] a heating element and a wicking element within the cartomizer body;</u>

352. It is my opinion that Liu783 discloses this limitation.

353. Liu783 discloses that atomizer 91 (the cartomizer) comprises atomizing mechanism 21 having heating wire 211 (the heating element) and fiber member 212 (the wicking element). Fiber member 212 is made of liquid-absorbing material such as fiberglass, and absorbs liquid smoke flowing from cigarette liquid smoke cup 3. EX1010, [0034] ("The heating wire 211 is wound around the fiber member 212, and the fiber member 212 is capable of absorbing water and reserving water like a sponge, and is capable of being made of fiberglass or a material having liquid-

NJOY Exhibit 1005.198

absorbent and liquid barrier properties such as cotton material."), *id.* ("fiber member 212 abuts against the liquid smokecup 3 to absorb the liquid smoke out of the liquid smoke cup 3[.]").

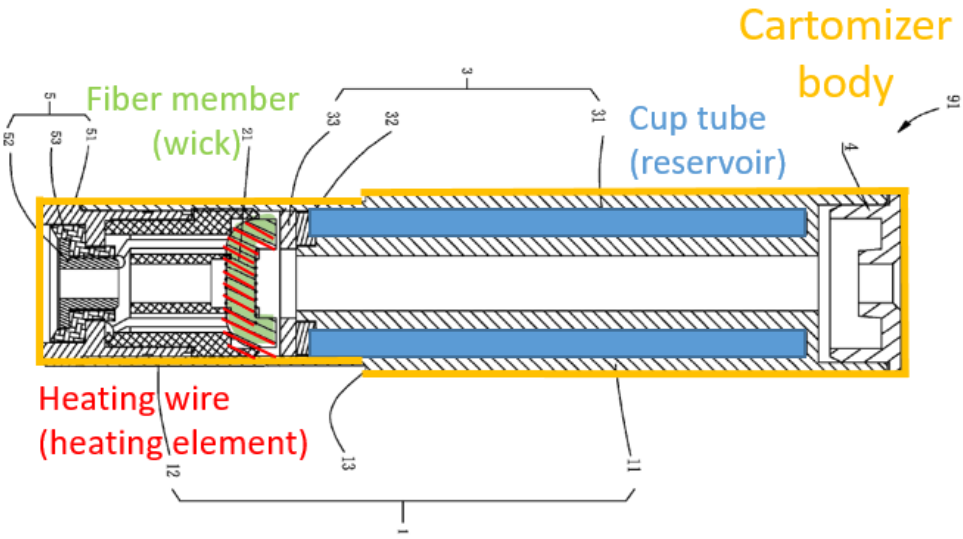

EX1010, Fig. 5

354. It is my opinion that Liu783 discloses a heating element under the construction adopted by the Petition because Liu783's heating wire is a "conductive material shaped into a wire, coil, or flat ribbon that generates heat in response to current." Specifically, Liu783's heating wire is a "wire" that is "wound around" the wick, *i.e.*, coiled around, and is electrically connected to a power source for "atomize it [the fluid]."

> **The atomizing mechanism 21 is for transforming the liquid smoke into smog, and comprises a heating wire 211**, a fiber member 212 for absorbing liquid smoke and supporting the heating wire 211, and an atomizing holder 213 for supporting the fiber member 212. **The heating wire 211 is wound around the fiber member 212**, and the

NJOY Exhibit 1005.199

> fiber member 212 is capable of absorbing water and reserving water like a sponge, and is capable of being made of fiberglass or a material having liquid-absorbent and liquid barrier properties such as cotton material. In this embodiment, the fiber member 212 is accommodated and fixed in the atomizing holder 213, **opposite ends of the heating wire 211 pass through the atomizing holder 213 and then are electrically connected with the positive and the negative.** The atomizing holder 213 is substantially cylindrical, and defines a locking slot therein for mounting the fiber member 212. The atomizing holder 213 is defined with a vent coaxially extended therethrough, and perforations axially extended through two sides of the vent for the heating wire to pass through. The atomizing holder 213 is fixed to the inner wall of the sucking cylinder 1 by expanding its side wall. The atomizing holder 213 abuts against the first seat 51 at its another end opposing the locking slot and is fixed in the sucking cylinder 1 by the first seat 51, so that the fiber member 212 abuts against the liquid smoke cup 3 to absorb the liquid smoke out of the liquid smoke cup 3.
>
> ***
>
> The liquid smoke is infiltrated from the cup tube 31 via the fluid barrier plate 31 and absorbed by and stored in the liquid storing component 32, and further absorbed by the fiber member 212 **for the heating wire 211 to atomize it.**

See EX1010, [0034] (emphasis added), [0035] (emphasis added).

355. It is further my opinion that Liu783 discloses a wicking element under the construction adopted in this Petition because Liu783 discloses a "fiber member 212" that absorbs liquid from the cup tube for vaporization by the wire wound around the fiber member. *See* EX1010, [0034] (copied above). *see also* [0015], [0035]. Because fiber member 212 is "made of fiberglass or a material having liquid-absorbent and liquid barrier properties such as cotton material" a POSA would understand that it transports liquid by capillary action.

NJOY Exhibit 1005.200

The atomizing mechanism 21 is for transforming the liquid smoke into smog, and comprises a heating wire 211, **a fiber member 212 for absorbing liquid smoke and supporting the heating wire 211**, and an atomizing holder 213 for supporting the fiber member 212. The heating wire 211 is wound around the fiber member 212, **and the fiber member 212 is capable of absorbing water and reserving water like a sponge, and is capable of being made of fiberglass or a material having liquid-absorbent and liquid barrier properties such as cotton material.**

***

Wherein, the atomizing mechanism comprises a heating wire, **a fiber member for absorbing liquid smoke and supporting the heating wire**, and an atomizing holder for supporting the fiber member, the heating wire is wound around the fiber member, the fiber member is accommodated and fixed in the atomizing holder, opposite ends of the heating wire pass through the atomizing holder and then are electrically connected with the first electrode and the second electrode in the connector[.]

***

The liquid smoke cup 3 comprises a cup tube 31 for storing the liquid smoke and a liquid guiding component for guiding the liquid smoke in the cup tube 31 to the atomizing mechanism 21 for atomization of the liquid smoke. The cup tube 31 is a cup having one end opened and another end closed, and has a ring-shaped cross-section 31, and is integrally formed with the sucking cylinder 1. The liquid guiding component comprises an oil barrier 32 disposed at a bottom of the cup tube 31 and a liquid storing component 33 affixed to a bottom of the oil barrier 32. The oil barrier 32 defines plural liquid guiding holes, and flow volume of the liquid smoke depends on the size and amount of the liquid guiding holes. The oil barrier 31 is firmly affixed to the opened end of the cup tube 31 to seal the liquid smoke. The liquid storing component 33 is also capable of absorbing water and reserving water like a sponge, and is made of a material which has heat-resistance and liquid-absorbent and liquid barrier properties. The liquid storing component 33 is fixed to the inner wall of the sucking cylinder 1 by expanding its side wall, and has its one end firmly affixed to the oil barrier 32 in order to fix the oil barrier 32 to the bottom of the cup tube

NJOY Exhibit 1005.201

> 31, and another end of the liquid storing component 33 abuts against the fiber member 212. **The liquid smoke is infiltrated from the cup tube 31 via the fluid barrier plate 31 and absorbed by and stored in the liquid storing component 32, and further absorbed by the fiber member 212 for the heating wire 211 to atomize it.**

See EX1010, [0034] (emphasis added), [0015] (emphasis added), [0035] (emphasis added).

356. Concerning the construction proposed by Petitioner in the related Section 337 Investigation (but not adopted here), Liu783 discloses a wick comprising a fiberglass member with absorbent characteristics bent into a "U" shape. In light of this disclosure, it is my opinion that a POSA would have known this wick was a pliable bundle of fibers for drawing liquid by capillary action.

h. <u>[1.H] an inhalation tube in fluid communication with the heating element and the wicking element;</u>

357. It is my opinion that Liu783 discloses this limitation.

358. Sucking cylinder 1 comprises a "vent axially extended therethrough" (inhalation tube). EX1010, [0031].

NJOY Exhibit 1005.202

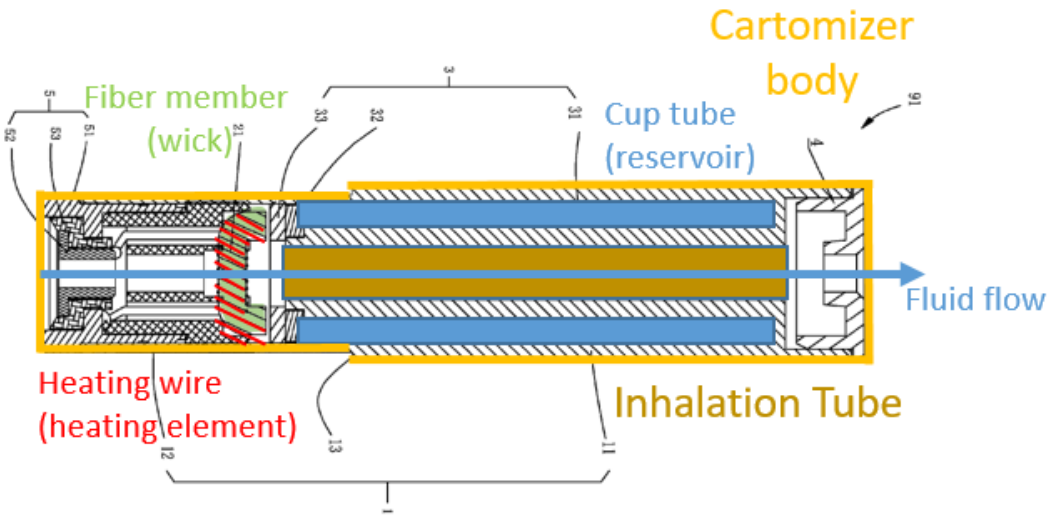

EX1010, Fig. 5

359. The axially extended vent is in fluid communication with heating wire 211 and fiber member 212. Liu783 discloses that "air enters the power rod 95…then passes by the vent of the atomizing holder 213 and the vent of the sucking cylinder 1." EX1010, [0044]. Liu783 also discloses that heating wire 211 and fiber member 212 is disposed across the vent of atomizer holder 213. EX1010, [0034] ("the fiber member 212 is accommodated and fixed in the atomizing holder 213, opposite ends of the heating wire 211 pass through the atomizing holder 213").

NJOY Exhibit 1005.203

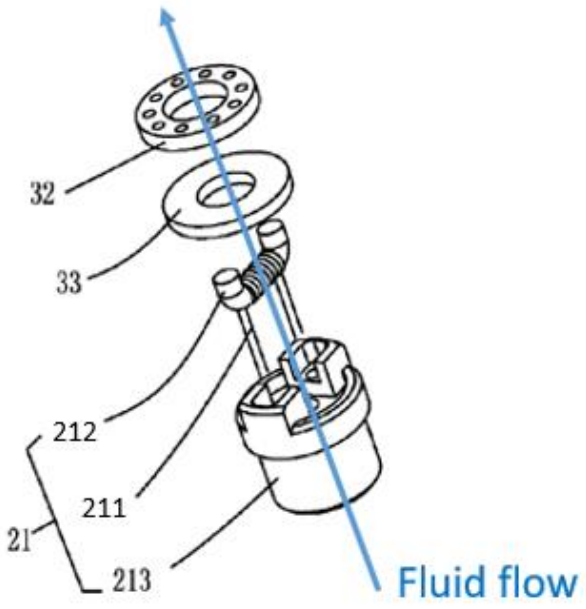

EX1010, Fig. 4[2]

i. <u>[1.I] a mouthpiece at or proximate to the mouthpiece end, the mouthpiece in fluid communication with the inhalation tube; and</u>

360. It is my opinion that Liu783 discloses this limitation.

361. Liu783 discloses that air exits atomizer 91 from nozzle cover 4 positioned at the mouthpiece end of the atomizer. *See* limitation [1.C]. A consumer

[2] I note that numbers 211 and 212 have been swapped in the annotated figure above. It is my opinion that a POSA would have understood that in the figure, what is now marked as 212 is the fiber element (i.e. the wick), and 211 is the heating wire. Specifically, the arrow coming from 211 is pointing to the ends of the heating wire that extend down from the wick through atomizing holder 213. EX1010, [0044] ("opposite ends of the heating wire 211 pass through the atomizing holder 213 and then are electrically connected with the positive and the negative.").

NJOY Exhibit 1005.204

places his or her mouth on the nozzle cover 4 and inhales vapor from it. Therefore, a POSA would have understood nozzle cover 4 to be the recited "mouthpiece."

362. Liu783 discloses that air "enters the atomizer 91…then passes by the vent of the atomizing holder 213 and the vent of the sucking cylinder 1, finally flows out of the sucking rod 90 via the vent of the nozzle cover 4." Thus, nozzle cover 4 is in fluid communication with the vent, which a POSA would understand to be the recited "inhalation tube."

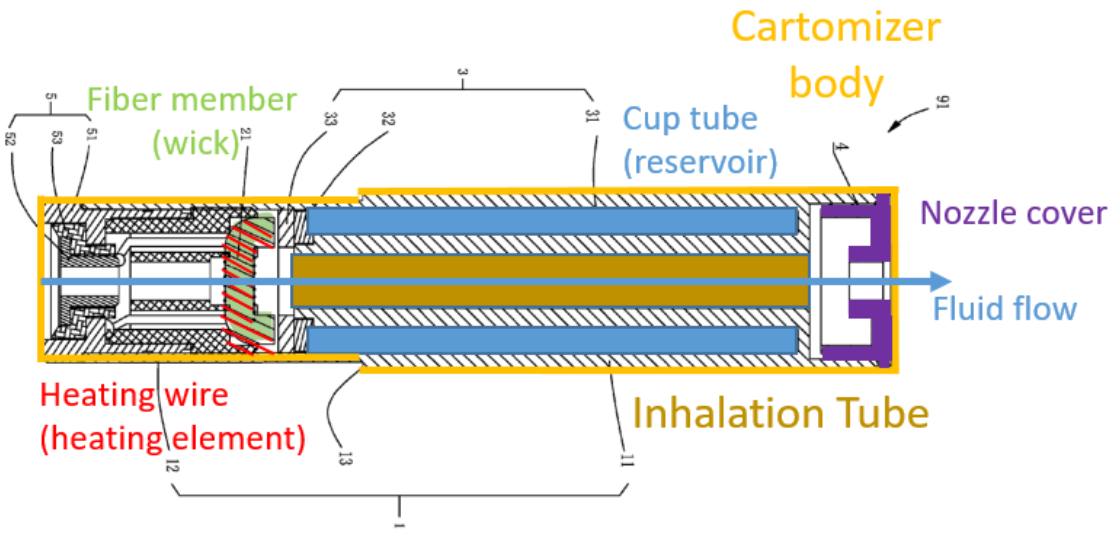

EX1010, Fig. 5

j. <u>[1.J] a plurality of cartomizer electrical contacts on an exterior of the insertion end,</u>

363. It is my opinion that Liu783 discloses this limitation.

364. Liu783 discloses that "an end of the atomizer 91 mated with the connector 92 is configured with a first connecting mechanism 5[.]" EX1010, [0030].

Liu783 further discloses that the "first connecting mechanism 5 comprises a first seat 51 as a first electrode…[and] a first pole 52 as a second electrode... and a first insulating sleeve 53[.]" EX1010, [0032]. A POSA would have understood the first seat 51 and the first pole 52 to be the recited "cartomizer electrical contacts" and that they are located on the exterior of the insertion end of atomizer 91 (i.e., the cartomizer). In the next limitation, I discuss how these components engage with the corresponding battery contacts. *See* limitation [1.K].

NJOY Exhibit 1005.206

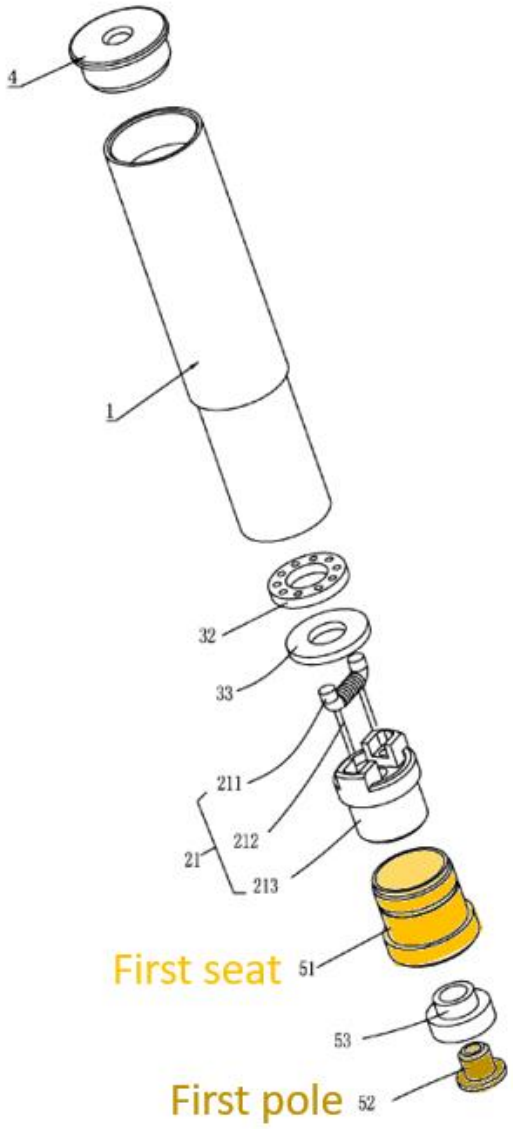

FIG. 4

EX1010, Fig. 4

NJOY Exhibit 1005.207

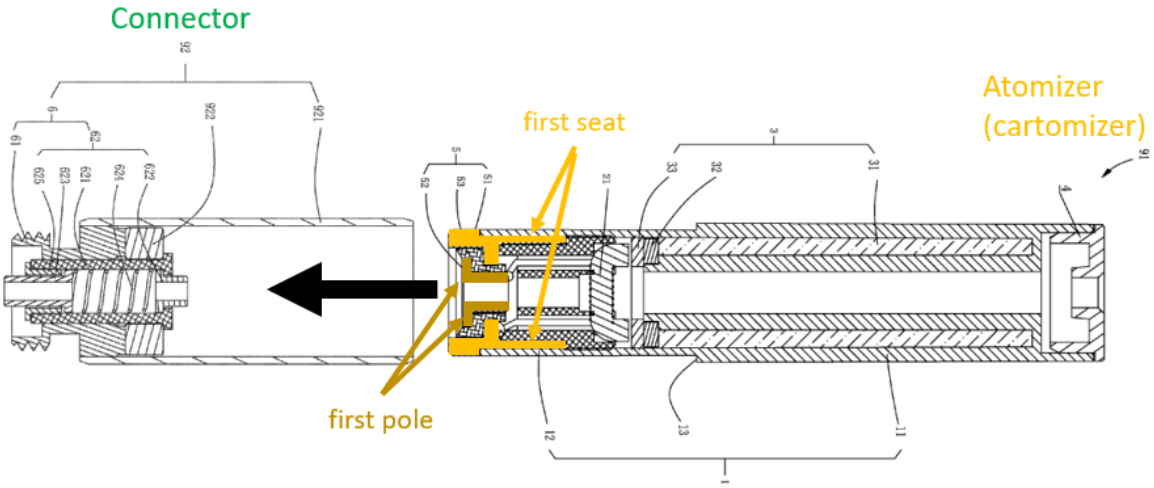

k. <u>[1.K] wherein the plurality of cartomizer electrical contacts is positioned to contact a plurality of battery electrical contacts at a base end of the chamber when the cartomizer body is inserted into the chamber.</u>

365. It is my opinion that Liu783 discloses this limitation.

366. Liu783 discloses first connecting mechanism 5 comprising first seat 51 and first pole 52. *See* limitation [1.J]. Liu783 also discloses second connecting mechanism 6 comprising second seat 61 and second pole unit 6 having second pole 622, spring 624, and upper pole 623. *Id.*

367. When Liu783's cartridge is inserted into the chamber, second pole 622 contacts first pole 52. EX1010, [0042] ("the second pole 622 of the second connecting mechanism 6 is slightly retracted for it is abutted against by an end face of the first pole 52").

368. Second seat 61, however, does not directly contact first seat 51 because it is separated from the chamber base by permanent magnet 922. *See* Fig. 7, below. To provide electrical coupling despite this separation, inner wall of casing 921 is conductive. EX1010, [0042] ("moreover, the side wall of the first seat 51 and the inner wall of the connecting casing 921 circumferentially contact with each other to realize conduction therebetween, to thereby achieve corresponding conduction of inner circuits of the atomizer 91 and the connector 92.").

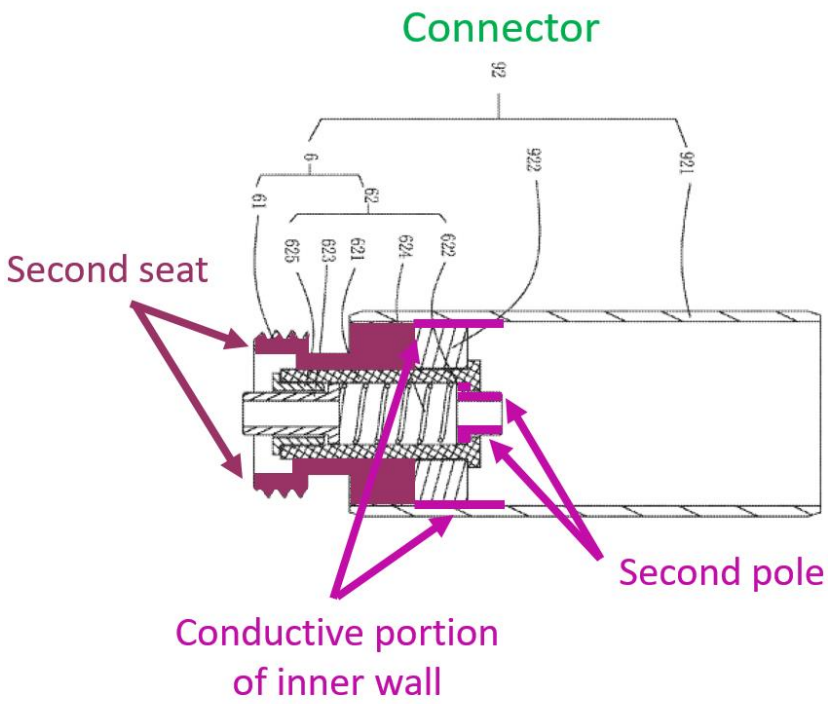

EX1010, Fig. 7

Thus, the conductive portion of the inner wall of the connecting casing 921 is the electrical contact (it does the contacting).

NJOY Exhibit 1005.209

369. Accordingly, a POSA would understand second pole 622 and the conductive portion of connecting casing 921 to correspond to the recited plurality of "battery electrical contacts" at the base end of the chamber, as shown in pink below:

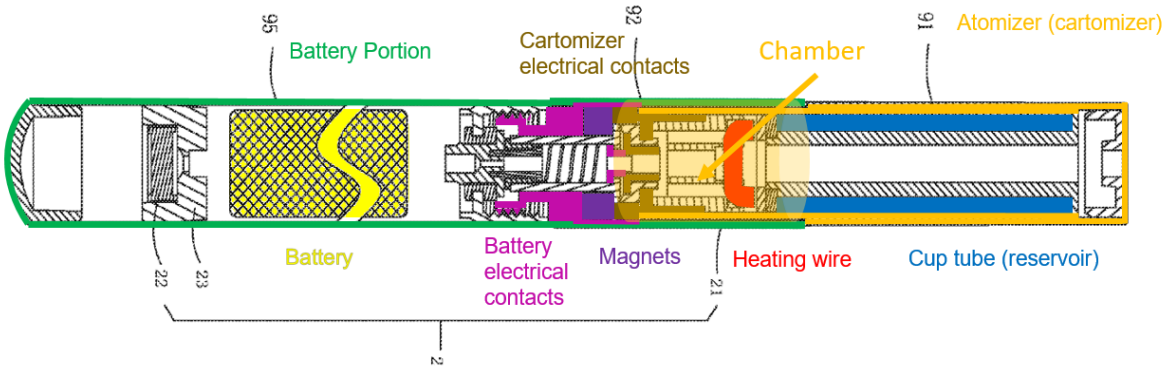

EX1010, Fig. 3.

3. Claim 5: The cartomizer of claim 1, wherein the cartomizer further comprises a structure that secures the cartomizer in the chamber, and wherein the structure comprises a cartomizer metallic surface configured to be attracted to at least one magnet in or proximate to the chamber.

370. It is my opinion that Liu783 disclose this limitation.

371. Liu783 discloses that atomizer 91 (i.e., the cartomizer) and connector 92 (i.e., the top part of the battery portion) are secured with a permanent magnet.

> As shown in FIG. 3, when the first connecting mechanism 5 of the atomizer 91 is inserted into the connecting casing 921 of the connector 92 to the right place, the first seat 51 has its one end to abut against or be close to the **permanent magnet 922** of the second connecting mechanism 6. **Because of the magnetic force of the permanent magnet 922, the first seat 51 is firmly attracted by the permanent magnet 922 but cannot be easily detached from the connector 91**, the second pole 622 of the second connecting mechanism 6 is slightly retracted for it is abutted against by an end face of the first pole 52 of

NJOY Exhibit 1005.210

> the first connecting mechanism 5 to overcome the elastic force of the spring 624, to ensure the first pole 52 and the second pole 622 in good contact with each other; moreover, the side wall of the first seat 51 and the inner wall of the connecting casing 921 circumferentially contact with each other to realize conduction therebetween, to thereby achieve corresponding conduction of inner circuits of the atomizer 91 and the connector 92.

EX1010, [0042] (emphasis added).

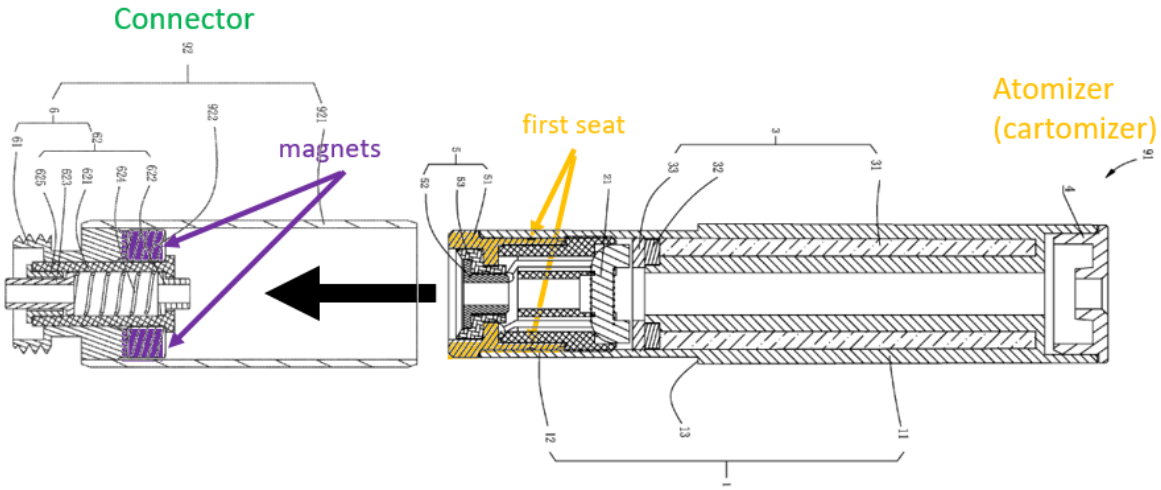

EX1010, combining Figs. 5 and 7

372. Liu783 discloses that first seat 51 "is capable of being made of a conductive magnet or magnetic material, and the magnetic material may be an iron material". EX1010, [0041]. *See also* [0032]. A POSA would have understood that iron, as a metal, constitutes the "metallic surface" required by this limitation.

4. Claim 13

a. <u>[13.A] A vaporizer device comprising:</u>

373. *See* limitation [1.A].

NJOY Exhibit 1005.211

b. **[13.B] a battery portion having an outer shell and a chamber defined by the outer shell; and**

374. *See* limitation [1.B].

c. **[13.C] a cartomizer having a mouthpiece end and an insertion end disposed opposite the mouthpiece end, the cartomizer comprising:**

375. *See* limitation [1.C].

d. **[13.D] a cartomizer body having a volume defined therein, the volume configured to hold a vaporizable substance,**

376. *See* limitation [1.D].

e. **[13.E] wherein the vaporizable substance is in a fluid state,**

377. *See* limitation [1.D].

f. **[13.F] wherein the cartomizer body is configured for insertion into the chamber such that at least part of the volume is positioned in the chamber when the cartomizer body is inserted into the chamber;**

378. *See* limitation [1.F].

g. **[13.G] a heating element within the cartomizer body;**

379. *See* limitation [1.G].

h. **[13.H] cartomizer electrical contacts operable to direct current to the heating element, wherein the cartomizer electrical contacts are on an exterior of the cartomizer body; and**

380. It is my opinion that Liu783 discloses this limitation.

381. Liu783 discloses the first seat 51 and first pole 52 as "cartomizer electrical contacts [] on an exterior of the insertion end of the cartomizer body." *See* limitation [1.J].

382. Liu783 further discloses that the "opposite ends of the heating wire 211 pass through the atomizing holder 213 and then are electrically connected with the positive and the negative." EX1010, [0034]. Liu783 also discloses "heating wire 211 to atomize it [liquid]." EX1010, [0035]. A POSA would have understood that first seat 51 and first pole 52 are operable to direct current to heating wire 211.

i. <u>[13.I] a wicking element inside the cartomizer body, the wicking element configured to absorb the vaporizable substance;</u>

383. It is my opinion that Liu783 discloses this limitation.

384. Liu783 discloses fiber member 212 ("wicking element") within the cartomizer body. *See* limitation [1.G]. Liu783 discloses that the fiber member is "for absorbing liquid smoke," *i.e.*, the recited vaporizable substance. EX1010, [0034].

j. <u>[13.J] an inhalation tube in fluid communication with the heating element and the wicking element; and</u>

385. *See* limitation [1.H].

k. <u>[13.K] a mouthpiece at or proximate to the mouthpiece end, the mouthpiece in fluid communication with the inhalation tube.</u>

386. *See* limitation [1.I].

NJOY Exhibit 1005.213

5. Claim 14: The cartomizer of claim 13, wherein at least a portion of the cartomizer body comprises a translucent material configured to allow viewing of the fluid vaporizable substance.

387. *See* limitation [9.D].

6. Claim 15: The cartomizer of claim 13, wherein the vaporizable substance comprises a liquid comprising nicotine.

388. It is my opinion that Liu783 discloses claim 15.

389. As I discussed above, Liu783 discloses a liquid smoke. *See* limitation [1.D]. In my opinion, the phrase "liquid smoke" means the liquid comprises nicotine. Further, Liu783 describes its invention as an "electronic cigarette," which supports my opinion because nicotine is the main ingredient of cigarettes. *See e.g.*, EX1021, 1:33-34 ("An improved ***electronic cigarette*** has a battery assembly, an atomizer assembly and a cigarette bottle assembly." (emphasis added)) 3:45-47 ("The ***cigarette liquid contains 0.1-3.5% nicotine***, 0.05-5% 45 tobacco flavor, 0.1-3% organic acid, 0.1-0.5% stabilizer, and propanediol for the remaining.") (emphasis added).

390. To the extent is argued that Liu783 and Liu438 do not disclose nicotine, it is my opinion that it would have been obvious to a POSA that liquid smoke in an e-cigarette device would contain nicotine, because the use of nicotine is very common in e-cigarette devices and is simply a design choice. *See, e.g.*, EX1015, 1:24-28; EX1021, 1:33-34, 3:45-47; EX1027, 3:51-55. Further, it is my opinion that

NJOY Exhibit 1005.214

a POSA would have had a reasonable expectation of success using nicotine because of its pervasiveness in e-cigarettes and that the use of nicotine would not negatively impact the functioning of the device.

7. Claim 16: The cartomizer of claim 13, wherein cartomizer electrical contacts are positioned to contact a plurality of battery electrical contacts at a base end of the chamber when the cartomizer body is inserted into the chamber.

391. *See* limitation [1.K].

D. Ground 2: Liu783 and Liu438 further in view of Tucker and the knowledge of a POSA

392. It is my opinion that Claims 9-10 and 17-18 of the ’981 Patent are unpatentable under 35 U.S.C. § 103 on the ground that they are rendered obvious by Liu783 and Liu438 further in view of Tucker and the knowledge of a POSA.

1. Motivation to Combine

a. <u>Window on the Outer Shell</u>

393. Liu783 and Liu483 in combination discloses a transparent cartridge but does not disclose that the outer shell covering the cartridge includes a window. *See* Ground 1, limitation [1.E].

394. Tucker, on the other hand, teaches the use of a window to view the remaining liquid. EX1034, [0038] (disclosing an e-cigarette with an “outer tube [] includ[ing] a clear (transparent) window 71 formed of a transparent material so as to allow a smoker to see the amount of liquid material remaining in the liquid supply reservoir 22.”).

NJOY Exhibit 1005.215

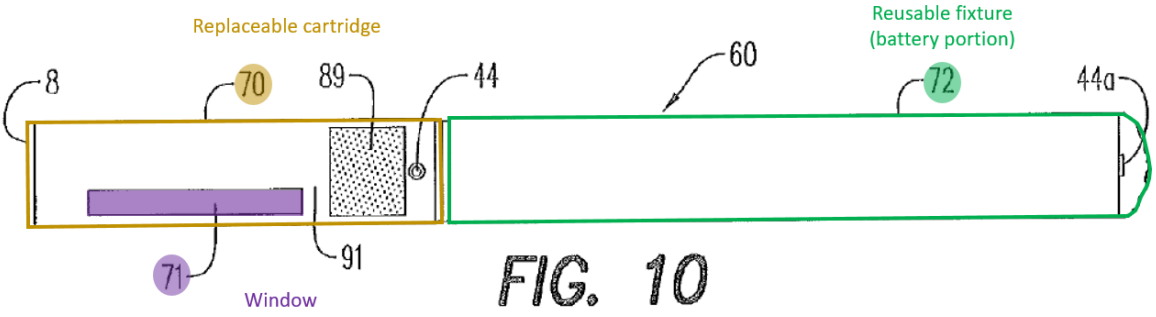

EX1034, Fig. 10

395. I note that Tucker's window is on the cartridge, but a POSA would have recognized that Tucker is teaching that a window can be used (whether that is on the cartridge or elsewhere such as the cartridge receptacle) to see the remaining liquid. Thus, a POSA would take Tucker's teaching of a window and apply that to Liu783's receptacle to permit the consumer to see past through the receptacle and into the atomizer to effect the purpose of the window, which is to view the remaining e-liquid. Accordingly, this is a "window" under the parties' constructions because it is an opening or a slit on the shell through which the cartomizer is viewed. EX1049.004 (agreeing that for the '722 Patent, "window" should be construed as an "opening or slit [on or proximate to] / [in] the shell through which the cartomizer is viewed").

396. In my opinion, a POSA would have been motivated to include a window on the outer shell, either as transparent plastic or a cutout to "facilitate to observe the amount of the internal liquid smoke, and prevent and empty burning of

NJOY Exhibit 1005.216

the heating wire after the liquid smoke has run out." EX1030, 4:32-35. The figure below illustrates the location in Liu783's shell where a POSA would be motivated to include a transparent window in order to view liquid in the cup tube.

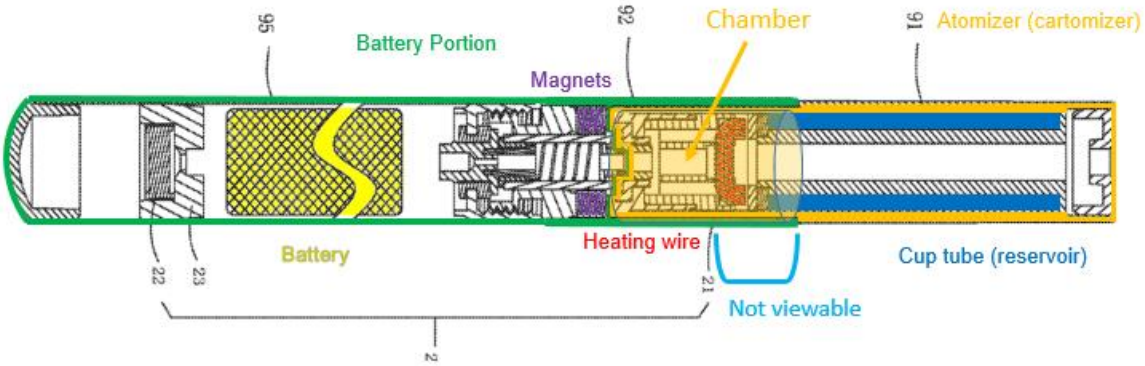

EX1010, Fig. 3

397. Using a window to view liquid amounts was common in the prior art. For example, U.S. Pat. No. 6,155,268 discloses a transparent "peeping window" in the side wall of its device that permits the consumer to view a transparent e-vapor liquid container:

> Incidentally, a transparent peeping window (not shown) can be formed in that portion of the side wall of the casing 12 which corresponds to the liquid container 32… to observe the remaining amount of the liquid flavor source 34 within the liquid container 32. In this case, the liquid container 32 itself must be formed of a transparent or translucent material. Naturally, the remaining amount of the liquid flavor source 34 within the liquid container 32 can be observed through the peeping window so as to find the timing of replenishing the liquid flavor source 34.

EX1052, 7:31-42; *see also* EX1030, 4:32-35 ("Moreover, the sucking cylinder is made of transparent material, for facilitating to observe the amount of the internal

liquid smoke, and prevent an empty burning of the heating wire after the liquid smoke has run out"); EX1031, 4:22-25 ("The liquid reservoir includes a clear or translucent window 13 to the exterior of the housing 12 for visually determining the liquid level 15 within the liquid reservoir.").

398. Without the window illustrated above, there is a possibility that consumers could be misled that the cartridge is depleted simply because the visible transparent portion of the cartridge shows no remaining liquid. In addition to possibly misleading consumers, incorrect knowledge of liquid level can also lead to the heating mechanism overheating and potentially catching fire. *See* EX1030, 4:32-35. Liu783, for instance, includes a heating coiling twined on a wick. *See* Ground 1, limitation [1.G]. For example, if the consumer takes a drag on depleted e-cigarette, the consumer may get a "dry hit," which is a super-heated blast of air. EX1055.003 ("Getting a dry hit isn't a great experience and it certainly isn't going to be great for your health as you are inhaling burnt cotton."); EX1038, 4:58-61 ("In order to facilitate observing the usage and balance of the e-liquid in the cartridge 1, and avoiding phenomenon of the e-liquid dryout in the cartridge 1, the cartridge 1 is made of transparent plastic material").

399. In my opinion, a POSA would have had a reasonable expectation of successfully adding a transparent window, such as the one taught by Tucker, to Liu783's battery portion. The addition of a window simply requires making a portion

NJOY Exhibit 1005.218

of the shell transparent or translucent (and plastic can be either) or cutting an opening on the connector wall. Neither modification would affect the functioning of Liu783's device.

b. <u>Coplanar Electrical Contacts</u>

400. Liu783 discloses a plurality of battery electrical contacts at a base end of the chamber, wherein the battery electrical contacts are configured to contact the plurality of cartomizer electrical contacts when the cartomizer body is inserted into the chamber. *See* Ground 1, limitation [1.K].

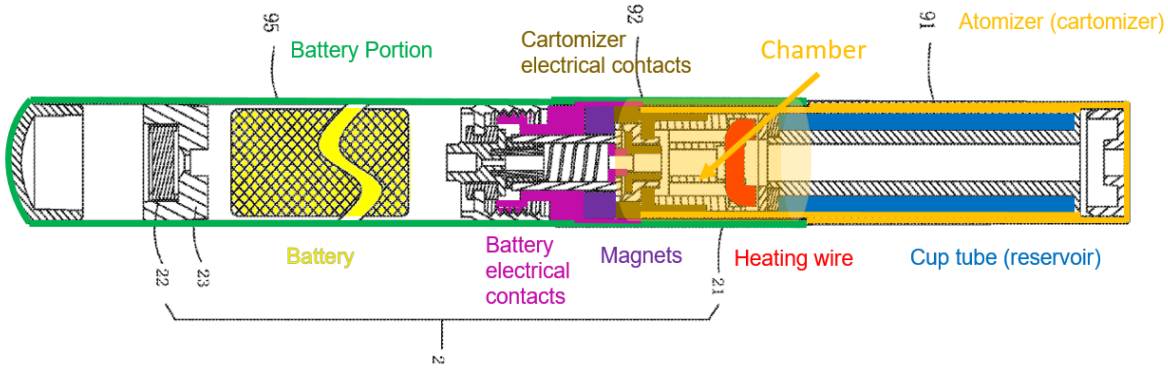

EX1010, Fig. 3

401. To the extent it is argued that these battery electrical contacts are not "coplanar," it is my opinion that the knowledge of a POSA renders obvious coplanar contacts. There are a limited number of ways to arrange concentric electrical contacts. Specifically, there are three possible arrangements: the electrodes can be arranged male-female, female-male, or flat. Liu783 discloses a female (atomizer) – male (battery portion) arrangement. Given the design space, a POSA would have

NJOY Exhibit 1005.219

recognized that Liu783's electrodes could easily be arranged to be flat. *See e.g.*, EX1004, Fig. 2. A POSA could accomplish this modification in a number of ways. One way would be to extend the outer battery electrical contact on the side wall over the top surface of the magnets, as shown below:

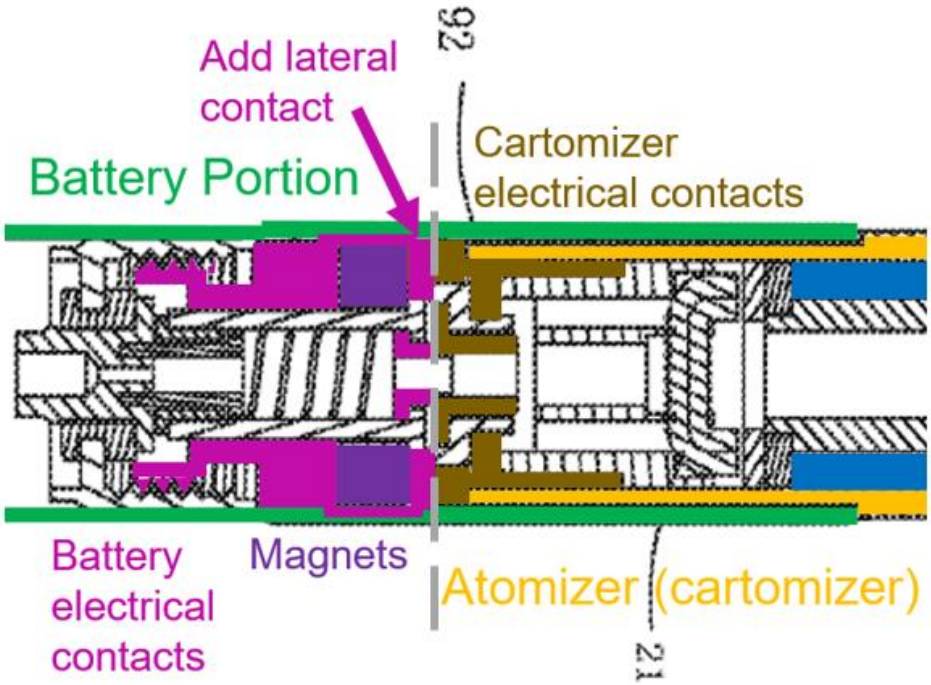

402. Alternatively, the magnets themselves could be used as the outer battery electrical contact. This comports with Liu783's teaching that magnets can be used as electrical contacts. EX1010, [0041] ("the second seat 61 is also capable of being made of ***a conductive magnet*** or magnetic material") (emphasis added). Then, to make the magnets' topmost portion even with the topmost portion of the inner electrode, the magnets could be extended, or raised slightly, as shown below:

NJOY Exhibit 1005.220

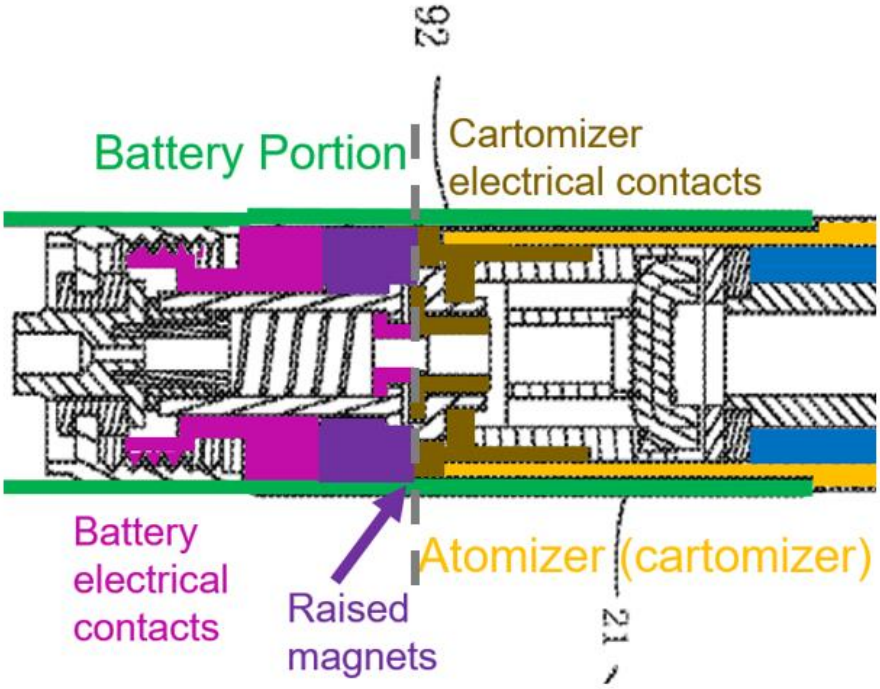

403. In my opinion, a POSA would have been motivated to modify Liu783's electrical contacts to be coplanar. This arrangement is superior to the side wall connector because the magnet is biasing the atomizer towards the base of the battery portion, not the side wall. In addition, level contacts minimize the buildup of dirt and debris that recessed contacts are prone to.

404. It is my opinion that a POSA would have had a reasonable expectation of success modifying Liu783's contacts to be coplanar because the modifications would be simple and would not affect the operation of the device. Further, coplanar contacts were well known in the art. Thus, this modification would be a predictable use of electronic vaporizer components according to their established functions.

NJOY Exhibit 1005.221

In this embodiment, the cigarette holder 2 includes an atomizing tube 21, a nozzle cover 22 and a male terminal fixing seat 23 arranged at both ends of the atomizing tube 21, and the atomizing tube 21 is provided with an air inlet 24. The atomizer assembly is located in the atomization tube 21, the atomizer assembly includes a glass fiber tube 25, the side wall of the glass fiber tube 25 is provided with a through hole, a heating wire 26 passes through the through hole, and the glass fiber tube 25 is wrapped with The oil-absorbing cotton 27 and the male terminal holder 23 are provided with a positive male terminal 28 and a negative female terminal 29 connected to the heating wire.

EX1044, [0019].

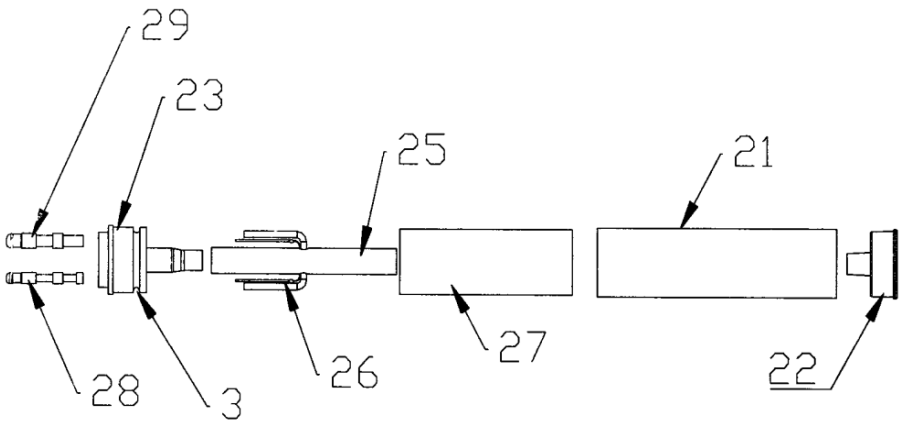

EX1044, Fig. 3

Referring to Figures 1 to 3, the electronic cigarette assembled in the plug-in mode includes an electronic cigarette stick 1 with a power output end at the front section, an atomizer 2 at the rear section, and an electronic cigarette stick 1 and the atomizer 2 The connecting seat 3 is provided with a heating wire 4 inside the connecting seat 3, and the output end of the power supply is two connecting pins 11 located at the rear end of the electronic cigarette rod 1, and the front end of the connecting seat 3 is provided with two connecting pins 11 The position corresponds to the connection hole 31 for the insertion of the connection needle 11, and the two ends of the heating wire 4 are respectively connected to the two connection holes 31, so that the connection needle 11 and the heating wire 4 are electrically connected;

NJOY Exhibit 1005.222

the atomizer The front end of 2 is hollow, forming a mounting section for the insertion of the connecting seat 3 and the rear end of the electronic cigarette rod 1. Both the outer walls of the connecting seat 3 and the rear end of the electronic cigarette rod 1 are provided with a card slot 5, and the inner wall of the mounting section A protruding card seat 21 embedded in the card slot 5 is provided on the top.

EX1045, [0016].

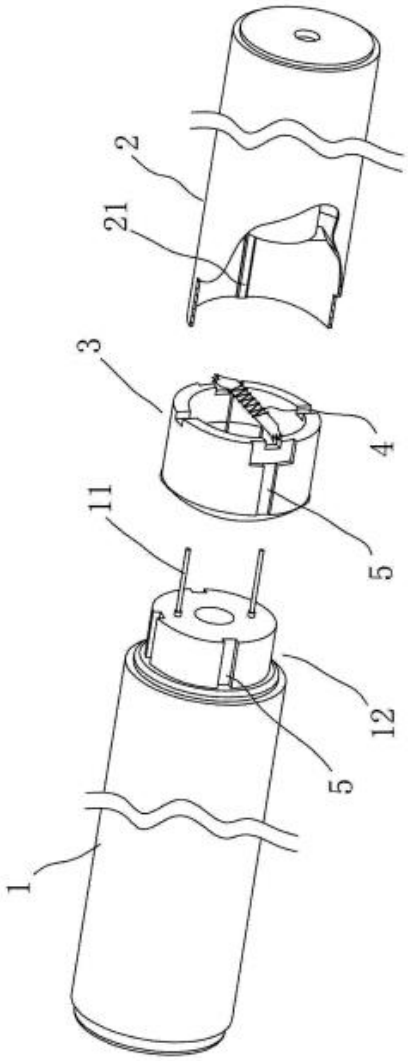

图 2

EX1045, Fig. 2

NJOY Exhibit 1005.223

> The battery 22 is connected to the charging terminal 211a and installed inside the main body 21. In addition, a power terminal 221 is provided at the top of the battery 22 to supply power to the combustion unit 25.

EX1046, [0030].

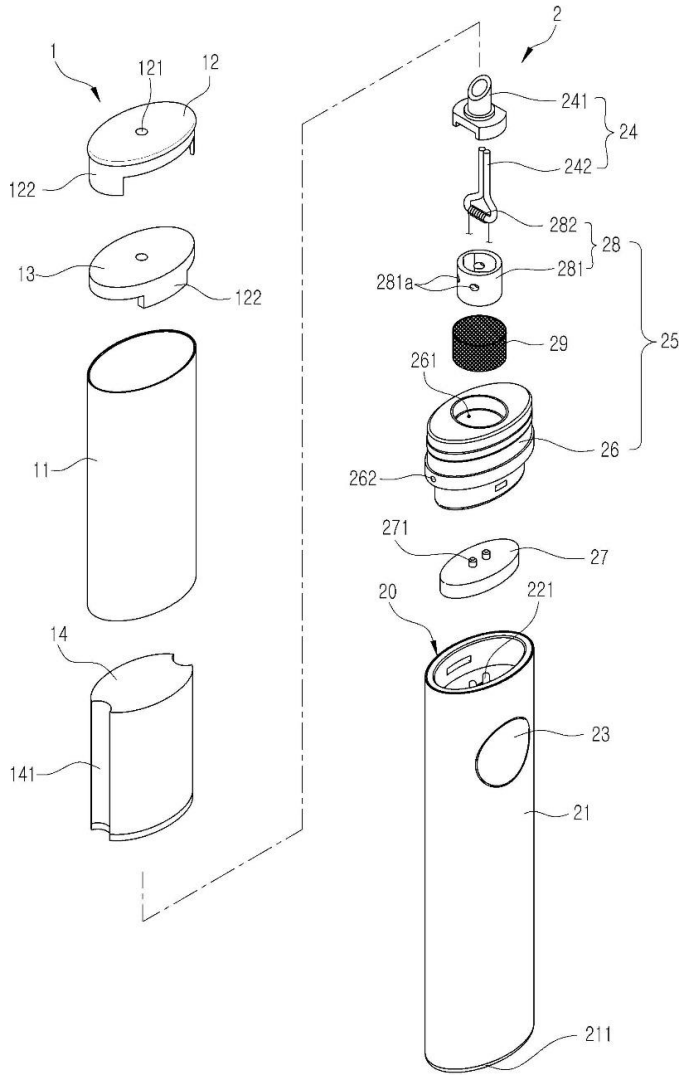

EX1046, Fig. 2

a. <u>Rechargeable Battery</u>

405. It is my opinion that Liu783 discloses a battery housing segment containing a battery. EX1010, [0043] ("power rod 95 is configured with a storage

NJOY Exhibit 1005.224

battery 955 and so on.”). Liu783, however, does not explicitly disclose that this battery is rechargeable.

406. A POSA would have been motivated to adapt Liu783 to use a rechargeable battery because there are a limited number of design options. Specifically, there are only three possible choices: battery, rechargeable battery, and connected power. Moreover, Liu783 already discloses the use of a battery. Thus, a POSA would have found it obvious to use a rechargeable battery, which has the same form, in place of a single-use disposable battery.

407. A POSA would have been further motivated to adapt Liu783 to use a rechargeable battery in view of the knowledge of a POSA because rechargeable batteries provide several benefits when compared to non-rechargeable batteries (disposable). Namely, rechargeable batteries offer economic savings, increased convenience, and ease of mind for the consumer. For example, each time a disposable battery runs dry, the consumer must purchase a new battery. In contrast, with a rechargeable battery, adult consumers can simply recharge the existing battery, whether in their own home, with a portable charger, or at any standard power outlet. *See e.g.*, EX1027, 4:1-5 (“When the rechargeable battery inside the electronic cigarette runs out of power, it may be directly plugged into the charger for charging, with no need to remove the rechargeable battery, resulting in very easy use.”).

NJOY Exhibit 1005.225

408. It is my opinion that A POSA would have had a reasonable expectation of successfully adding a rechargeable battery to Liu783. This is made evident by the many other vaporization devices that have rechargeable batteries present in the art. *See e.g.*, EX1021, 2:26-27 ("The lithium ion battery (203) may be either a rechargeable polymer lithium ion battery or a rechargeable lithium ion battery."); EX1027, 2:10-13 ("The said battery is a rechargeable battery, which has a flexibly connected charging plug. The blades of the said plug come out of the other end of the said shell.").

> Third, the electronic smoking device includes a rechargeable battery, to power the cylindrical heating element. The rechargeable battery is in electrical contact with the cylindrical heating element. Before using the device for the first time, the user charges the battery, which then typically provides sufficient power for about 1/2 hours of use or about 300 inhalations before recharging is required.

EX1022, [0010].

409. In my opinion, a POSA would have had every expectation that a device already containing a battery would continue to operate once that battery is made rechargeable.

2. Claim 9

a. <u>[9.A] A vaporizer device comprising:</u>

410. *See* Ground 1, limitation [1.A].

b. <u>[9.B] a cartomizer comprising,</u>

411. *See* Ground 1, limitation [1.C].

NJOY Exhibit 1005.226

c. [9.C] a cartomizer body configured to hold a fluid vaporizable substance,

412. *See* Ground 1, limitation [1.D].

d. [9.D] wherein at least a portion of the cartomizer body comprises a translucent material configured to allow viewing of the fluid vaporizable substance;

413. *See* Ground 1, limitation [1.F].

e. [9.E] a heating element and a wicking element within the cartomizer body; and

414. *See* Ground 1, limitation [1.G].

f. [9.F] a plurality of cartomizer electrical contacts on an exterior of the insertion end; and

415. *See* Ground 1, limitation [1.J].

g. [9.G] a battery portion, the battery portion having a first end and a second end and comprising:

416. It is my opinion that Liu783 discloses this limitation.

417. Liu783 discloses power rod 95 and connector 92, which A POSA would have understood to be the recited "battery portion" when engaged. *See* Ground 1, limitation [1.B]. As shown below, the battery portion has a first and a second end:

NJOY Exhibit 1005.227

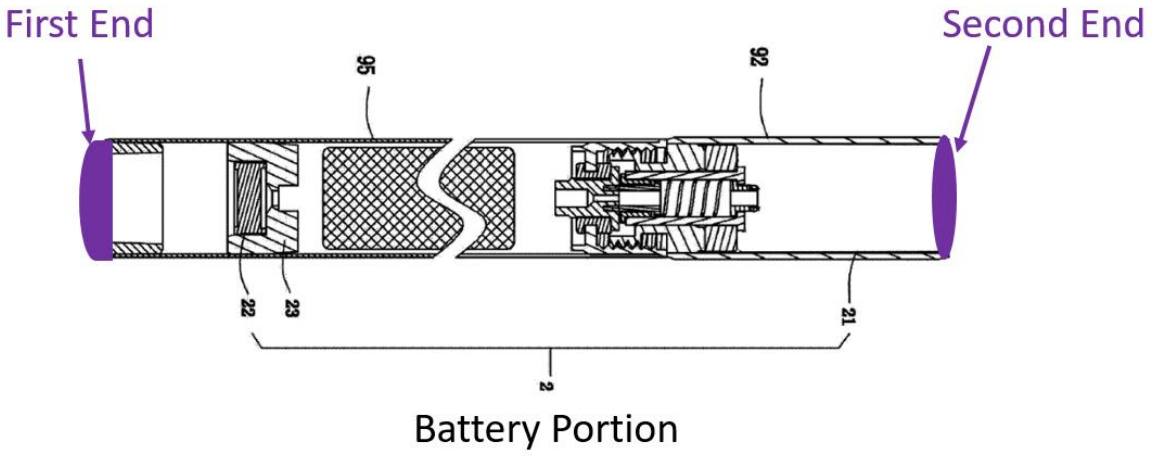

EX1010 at Fig. 3

h. <u>[9.H] a battery housing segment proximate the first end of the battery portion; and</u>

418. It is my opinion that Liu783 discloses this limitation.

419. As I discussed above, Liu783 discloses a battery portion consisting of a power rod 95 and a connector 92. *See* Ground 1, limitation [1.B]. A POSA would have understood the power rod 92, which contains a battery, to be the recited "battery housing segment" proximate the first end of the battery portion. *See* Ground 1, limitation [1.B].

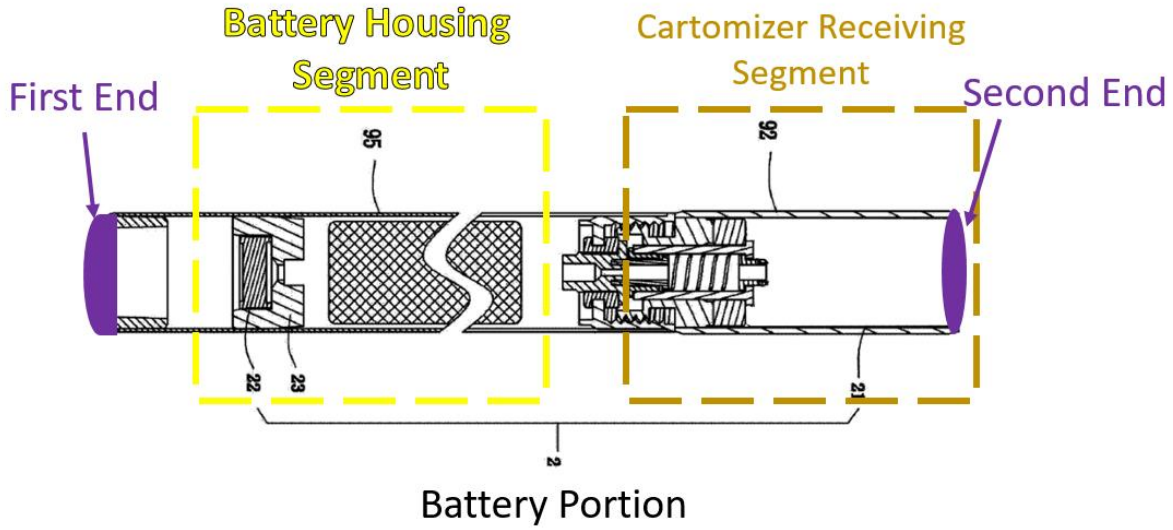

EX1010 at Fig. 3.

i. <u>[9.I] a cartomizer receiving segment proximate the second end of the battery portion,</u>

420. It is my opinion that Liu783 discloses this limitation.

421. As I discussed above, Liu783 discloses a battery portion consisting of a power rod 95 and a connector 92. *See* Ground 1, limitation [1.B], Ground 2 limitation [9.I].

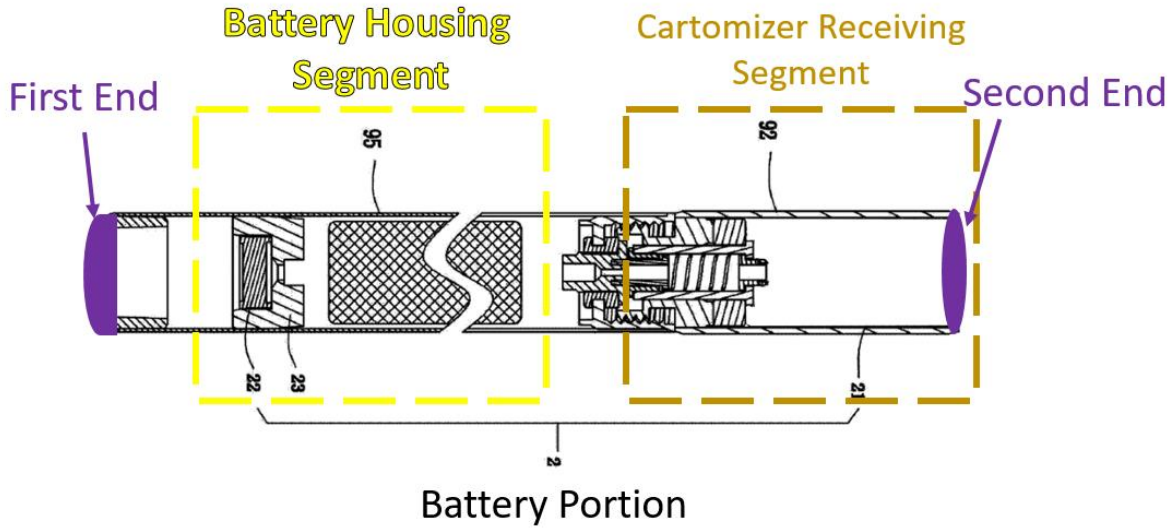

EX1010, Fig. 3.

j. <u>[9.J] the cartomizer receiving segment comprising a chamber defined by an outer shell of the battery portion,</u>

422. It is my opinion that Liu783 discloses and renders obvious this limitation.

423. As I discussed above, Liu783 discloses a battery portion having a chamber defined by the outer shell. *See* Ground 1, limitations [1.B], [1F].

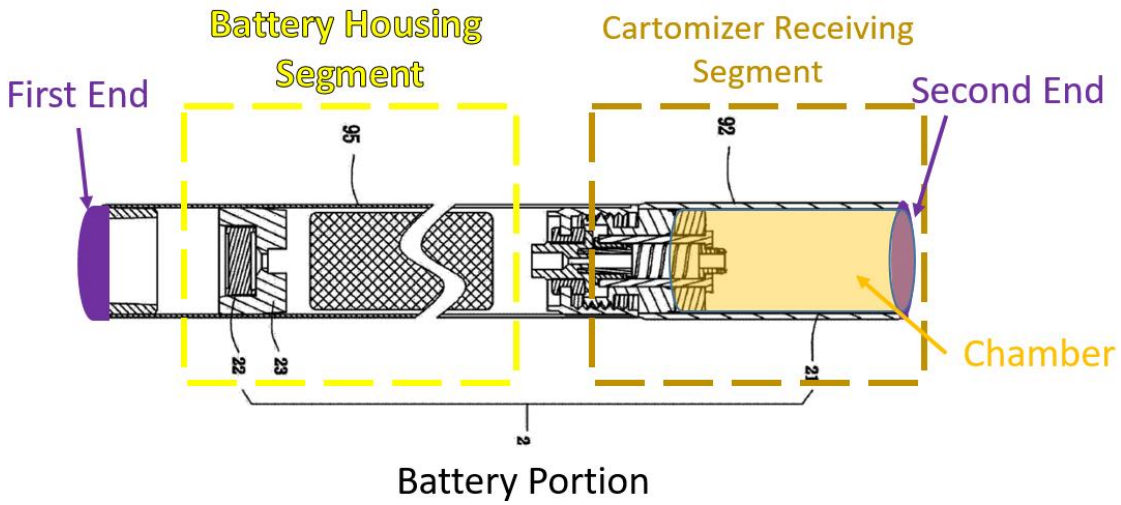

EX1010, Fig. 3.

424. To the extent that it is argued that this limitation requires a unitary outer shell, it is my opinion that a POSA would have been motivated to provide a power rod integrated with the connection. I discuss this in further detail above in Section IX.C.1.b.

k. <u>[9.K] wherein a window is provided in the outer shell, and wherein the translucent portion of the cartomizer body aligns with the window when the cartomizer body is inserted into the chamber.</u>

425. It is my opinion that Liu783, Liu438, and Tucker in combination renders obvious this limitation.

426. It is my opinion that the combination of Liu783 and Liu438 renders obvious a translucent cartomizer. *See* limitation [9.D]. As I discussed above in Section IX.D.1.a, a POSA would have found it obvious to modify Liu783's cartridge receptacle, in view of the teachings of Tucker, such that it comprises a transparent

window permitting viewing of the liquid smoke cup when the atomizer 91 is inserted into the connector.

3. Claim 10: The vaporizer device of claim 9, wherein outer shell is commonly shared by the battery housing segment and the cartomizer receiving segment.

427. It is my opinion that Liu783 and Tucker in combination and in view of the knowledge of a POSA renders obvious this limitation.

428. As I discussed above, Liu783 discloses a battery portion consisting of connector 92 threadedly connected to power rod 95. *See* Ground 1, limitation [1.B]. The battery portion's outer shell is defined by connector 92's connecting case 921, power rod 95's end cap 956, and the side wall of the power rod. *Id.* As seen in the figure below, this outer shell is commonly shared by the battery housing segment and the cartomizer receiving segment.

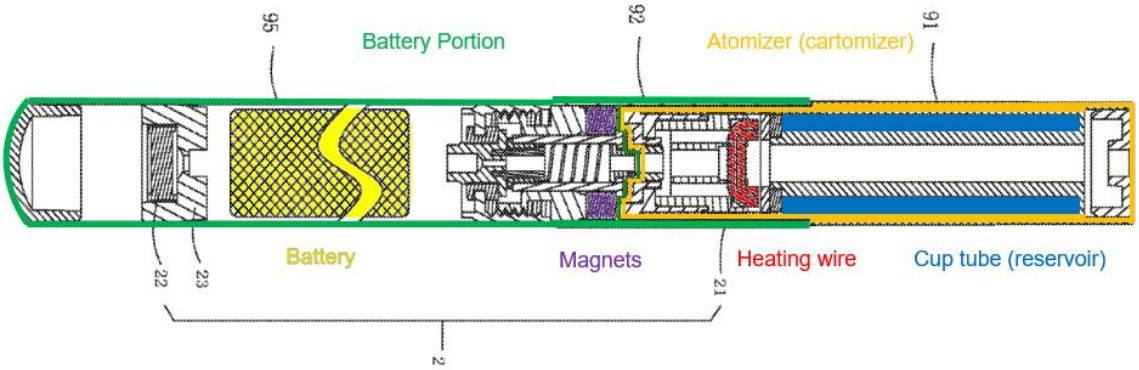

EX1010, Fig. 3

NJOY Exhibit 1005.232

429. To the extent that it is argued that this limitation requires a unitary outer shell, it is my opinion that a POSA would have been motivated to produce a unitary, integrated power rod and connector as discussed in Section IX.C.1.b.

4. Claim 11: The vaporizer device of claim 9, further comprising a rechargeable battery in the battery housing segment.

430. It is my opinion that Liu783, Liu438, and Tucker in combination in view of the knowledge of a POSA renders obvious this limitation.

431. As I discussed above, Liu783 discloses a power rod 95 ("battery housing segment") containing a battery. *See* Ground 1, limitation [1.B], Ground 2, limitation [9.H]. Liu783 further discloses that the power rod 92 contains a storage battery 955. EX1010, [0043] ("The power rod 95 is configured with a storage battery 955 and so on. The storage battery 955 has its first electrode and second electrode to be respectively electrically connected with the inner thread joint 951 and the lower pole 952."). To the extent that this storage battery 955 is disposable, a POSA would have considered it to be readily interchangeable with a rechargeable. *See* Section IX.D.1.c.

5. Claim 17

a. <u>[17.A] A vaporizer device comprising:</u>

432. *See* limitation [9.A].

b. <u>[17.B] a cartomizer comprising:</u>

433. *See* limitation [9.B].

NJOY Exhibit 1005.233

c. **[17.C] a cartomizer body configured to hold a vaporizable substance, wherein the vaporizable substance is in a fluid state,**

434. *See* limitations [9.D], [13.E].

d. **[17.D] wherein the cartomizer body is configured for insertion into a chamber defined by an outer shell of a battery portion of a vaporizer device,**

435. *See* limitations [1.B], [1.F].

e. **[17.E] a heating element within the cartomizer body,**

436. *See* limitation [1.G].

f. **[17.F] cartomizer electrical contacts operable to direct current to the heating element, and**

437. *See* limitation [13.H].

g. **[17.G] a mouthpiece at or proximate to the mouthpiece end, the mouthpiece in fluid communication with the inhalation tube; and**

438. *See* limitation [1.I].

a. **[17.H] a battery portion, the battery portion having a first end and a second end, the battery portion comprising:**

439. *See* limitation [9.G].

h. **[17.I] a chamber of a cartomizer receiving segment, the chamber configured for receiving the cartomizer body, the cartomizer electrical contacts, and the heating element through an opening at a distal insertion end of the battery portion,**

440. It is my opinion that Liu783 discloses this limitation.

441. As I discussed above, Liu783 discloses a cartomizer receiving segment (connector 92) having a chamber configured to receive the cartomizer body (atomizer 91). *See* Ground 1, limitation [1.F], Ground 2, limitation [9.J]. When the atomizer is inserted into the connector through an opening at a distal end of the connector, the cartomizer electrical contacts (first seat 51 and first pole 52) and the heating element (heating wire 21) are disposed within the chamber, and therefore are received by the chamber. *See* FIG. 3:

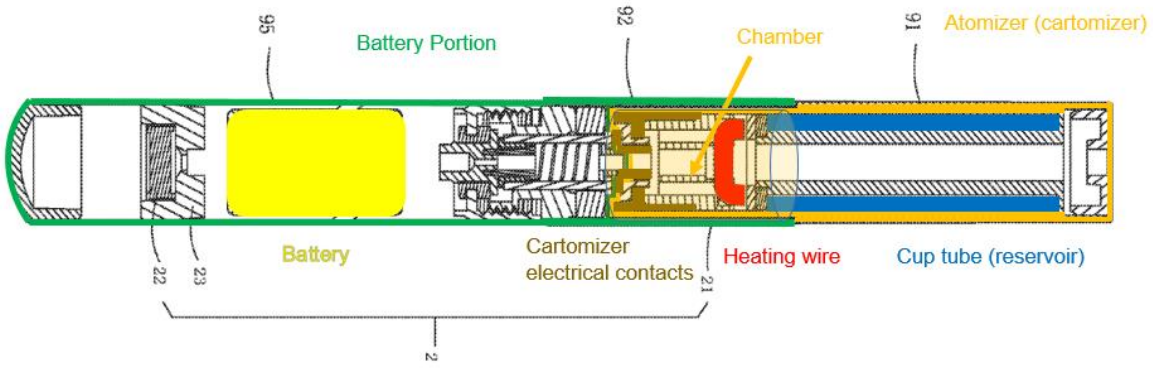

EX1010 at Fig. 3

i. <u>[17.J] a battery segment disposed between the cartomizer receiving segment and a battery end of the battery portion opposite from the distal insertion end of the battery portion, the battery segment comprising a battery,</u>

442. It is my opinion that Liu783 discloses this limitation.

443. As I discussed above, Liu783 discloses a battery portion comprising a battery. *See* Ground 1, limitation [1.B]. Power rod 95 is the recited "battery

NJOY Exhibit 1005.235

segment," and is disposed between connector 92, which includes the "cartomizer receiving segment" and a battery end of the battery portion opposite from the distal insertion end. *See* limitations [9.H], [9.I].

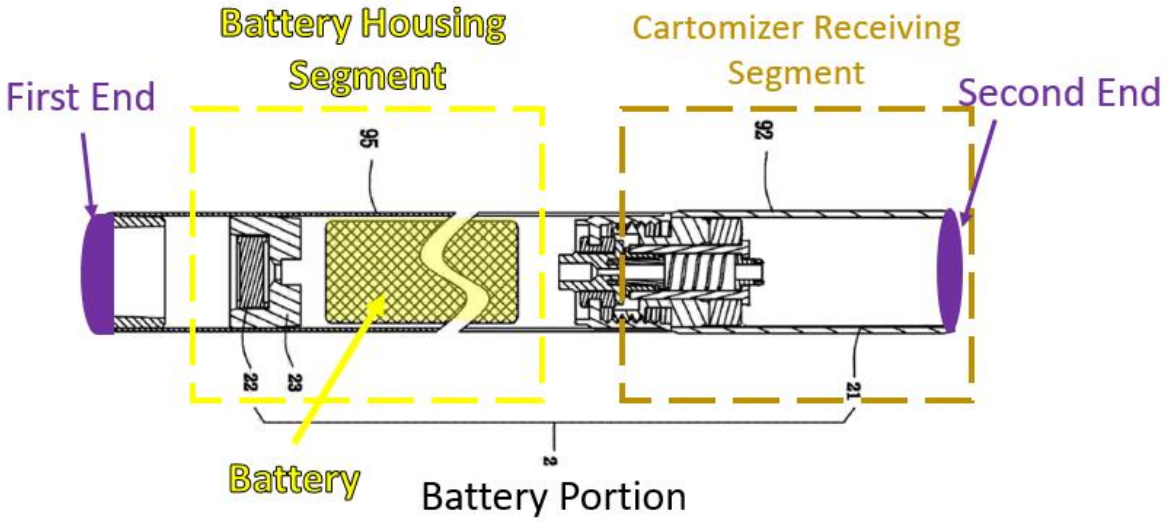

EX1010 at Fig. 3.

j. <u>[17.K] battery electrical contacts for completing a circuit with the cartomizer electrical contacts when the cartomizer electrical contacts are received into the chamber, the battery electrical contacts being coplanar, and</u>

444. It is my opinion that Liu783 discloses this limitation.

445. By its plain language, this limitation only requires the "battery electrical contacts being coplanar." The limitation does not give any indication of what the contacts are co-planar with, such as the surface of the receiving end of the chamber, or any other plane.

446. I note that the term "co-planar" is not used in the '981 specification in the context of the battery electrical contacts. The specification provides a reference point to understand what "co-planar" means – *i.e.*, it defines the plane first and then considers the objects. '981 Patent, 7:31-34 ("In embodiments where button 118 is coplanar or aligned ***with the surface of outer shell 106***, as described herein, ring indicator 116 may also be coplanar or aligned ***with button 118 and the surface of outer shell 106***.").

447. Therefore, because Liu783 discloses only two battery contacts, and two points always fall on a plane, Liu783's contacts are co-planar. This is shown in Fig. 7, which is a 2-D image (*i.e.*, a plane), that simultaneously depicts the inner side wall of connecting casing 921 and second pole 622 (the two battery contacts). The contacts further exist in at least a second plane as a straight line and be drawn across Fig. 7 that runs through casing 921 (purple line, outer contact) and pole 622 (pink, inner contact).

NJOY Exhibit 1005.237

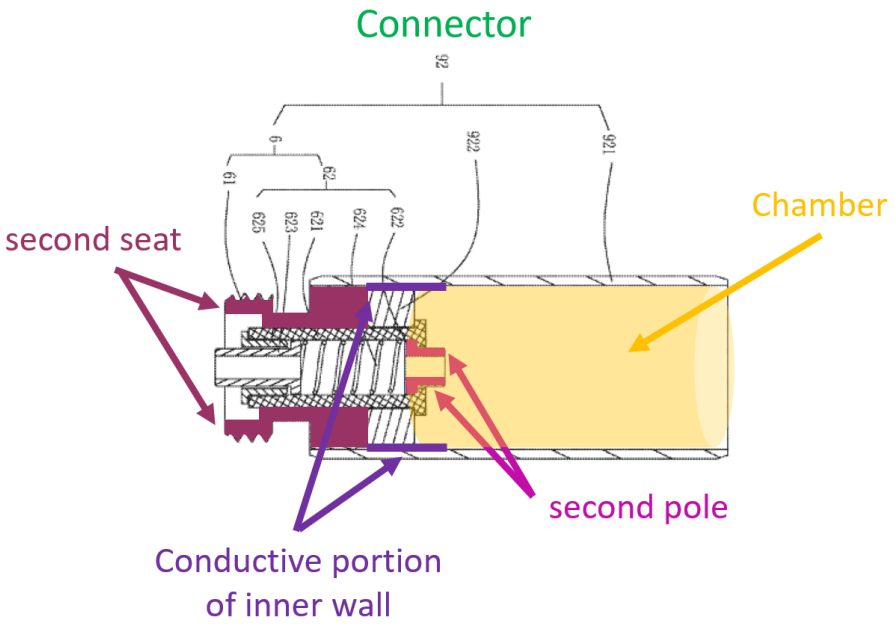

EX1010, Fig. 7

448. To the extent that the Board disagrees, and requires that the topmost portions (not express in the limitation) of the battery contacts must be planar with the surface of the receiving end of the chamber (not express in the limitation), it is my opinion that Liu783 in view of the knowledge of a POSA renders this limitation obvious as set forth in Section IX.D.1.b.

k. <u>[17.L] an outer shell forming at least part of the chamber, wherein a window is formed in the outer shell to permit viewing of the cartomizer body when the cartomizer body is received into the chamber.</u>

449. *See* limitation [9.K].

NJOY Exhibit 1005.238

6. Claim 18

a. [18.A] The vaporizer device of claim 9, wherein the cartomizer has a mouthpiece end and an insertion end disposed opposite the mouthpiece end, the cartomizer further comprises,

450. *See* Ground 1, limitation [1.C].

b. [18.B] an inhalation tube in fluid communication with the heating element and the wicking element; and

451. *See* Ground 1, limitation [1.H].

c. [18.C] a mouthpiece at or proximate to the mouthpiece end, the mouthpiece in fluid communication with the inhalation tube;

452. *See* Ground 1, limitation [1.I].

d. [18.D] wherein the plurality of cartomizer electrical contacts is positioned to contact a plurality of battery electrical contacts at a base end of the chamber when the cartomizer body is inserted into the chamber.

453. *See* limitation [17.K].

E. Ground 3: Liu783 and Liu438 further in view of Zheng

454. It is my opinion that Claim 8 of the ’981 Patent is unpatentable under 35 U.S.C. § 103 on the ground that it is rendered obvious by Liu783 and Liu438 further in view of Zheng.

1. Motivation to Combine

a. Compressible Electrical Contacts

455. Liu783 discloses two pairs of corresponding cartomizer and battery electrical contacts and provides that one pair includes a compressible electrode. *See*

NJOY Exhibit 1005.239

Ground 1, limitations [1.J], [1.K]. Liu783, however, does not disclose that the second pair is compressible.

456. Zheng discloses compressible battery contact push pins for an e-cigarette device. The push pins comprise "resilient battery columns" having "a spring 302 inside [a] hollow cavity" and "a movable probing head [] disposed at the opening of the hollow cavity." EX1050, 3:7-13. I note that Zheng's push-pin contacts are commonly referred to the art as pogo-pins.

NJOY Exhibit 1005.240

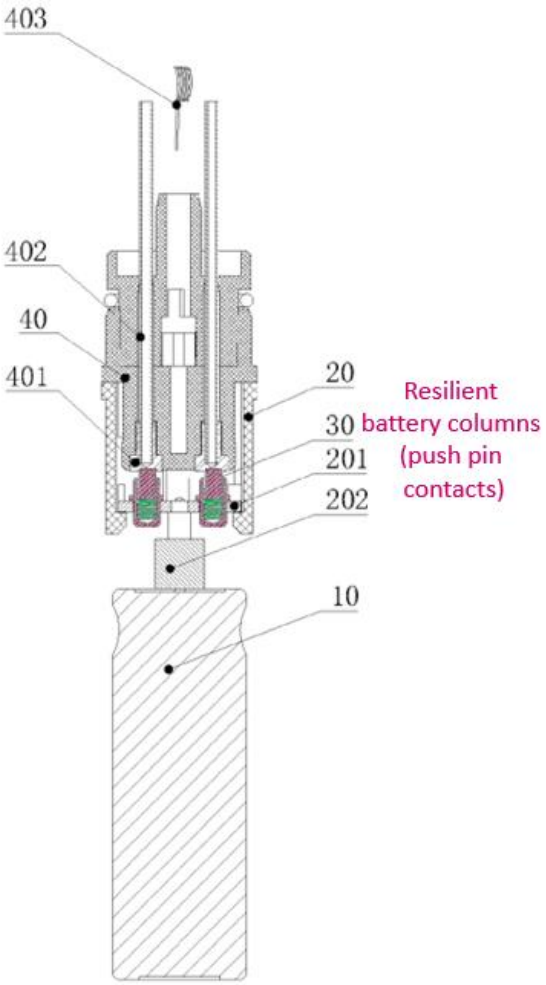

FIG.1

NJOY Exhibit 1005.241

FIG.2

EX1050, Figs 1-2

457. A POSA would have been motivated to modify Liu783's device to include Zheng's push pins because they are more reliable compared to Liu783's side wall connectors. In Liu783's device, there is no force biasing the cartomizer connectors towards the side wall connectors. Therefore, as the sidewall connectors wear down from sheer forces from repeated insertions, the electrical coupling could become less stable. In contrast, push pin connectors provide a biasing force towards the cartomizer contacts. So even if the contacts wear from use, the push pin connectors will ensure a stable electrical coupling.

458. Moreover, by placing push pins over the Liu783's battery magnets, the magnets will provide an attractive force to the cartomizer contacts, pulling those contacts into the push pins. Push pins located over the battery magnets can connect

NJOY Exhibit 1005.242

to the battery electrode either through the side wall contact or the battery magnets themselves can be conductive. EX1010, [0041].[3]

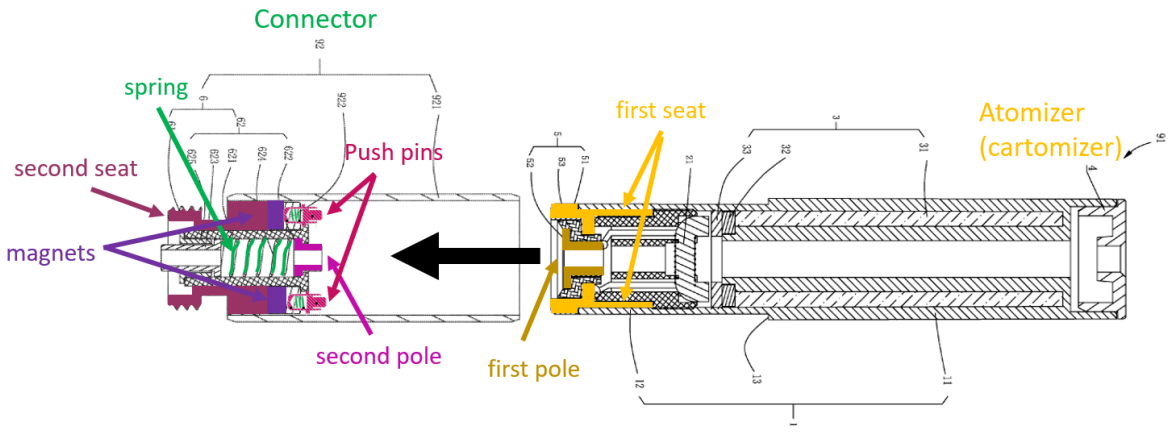

459. In addition, a POSA would have been motivated to use push pin contacts because push pins are self-cleaning. Movement against the corresponding cartomizer contacts removes dirt and debris from the contacts. Finally, Zheng teaches that its push pins are "simple" and "easy to manufacture." EX1050, 1:58-60.

460. A POSA would have had a reasonable expectation of successfully adding Zheng's push pin contacts to Liu783's device. Push pin contacts are well-known, available, and commonly used in electrical devices. *See e.g.*, EX1009; EX1053; EX1054. A POSA would have had no trouble adapting Liu783 to include

[3] A POSA would have understood that the push-pins can be made of a conductive and non- ferromagnetic material, such as copper, such that the magnets do not affect the functionality of the push-pins.

NJOY Exhibit 1005.243

such contacts. Moreover, combining Zheng with Liu783 would be routine and predictable.

2. Claim 8: The cartomizer of claim 1, wherein the plurality of cartomizer electrical contacts is further configured to at least partially compress the plurality of battery electrical contacts when the cartomizer body is inserted into the chamber.

461. It is my opinion that Liu783 and Liu438 in view of Zheng renders obvious this limitation.

462. As I explained in Section IX.E.1.a, it would have been obvious to a POSA to modify Liu783's device to compressible push pin contacts.

F. Ground 4: Thorens788 in view of Thorens231

463. Claims 1 and 13-16 of the '981 Patent are unpatentable under 35 U.S.C. § 103 on the ground that they are rendered obvious by International Application No. WO2011/160788 ("Thorens788") (EX1004) in view of U.S. Patent No. 8,794,231 ("Thorens231") (EX1002).

1. Motivation to Combine

a. <u>Mouthpiece Housing</u>

464. Thorens788 and Thorens231 are directed to substantially the same device. As I explained above, Thorens788 discloses a smoking system comprising a housing, which further comprises a shell and a mouthpiece. EX1004, 10:25-26 ("Preferably, the smoking system comprises a housing. The housing may comprise a shell and a mouthpiece."). Similarly, Thorens231 discloses an "electrically heated

NJOY Exhibit 1005.244

smoking system [that] includes a shell and a replaceable mouthpiece." EX1002, Abstract. I further note that the two Thorens references share common inventors. *See* EX1004, (75); EX1002, (75).

465. However, I note two differences between the two Thorens references. First, while Thorens788 states that the heating element and capillary wick are preferably contained with a "mouthpiece", none of its figures illustrates the heating element and capillary wick protected by a structure. EX1004, 10:28-29 ("Preferably, the liquid storage portion, the capillary wick, the at least one heater and the air outlet are contained in the mouthpiece."). Thorens231, in contrast, provides a mouthpiece housing that protects the heating element and capillary wick. EX1002, Fig. 3.

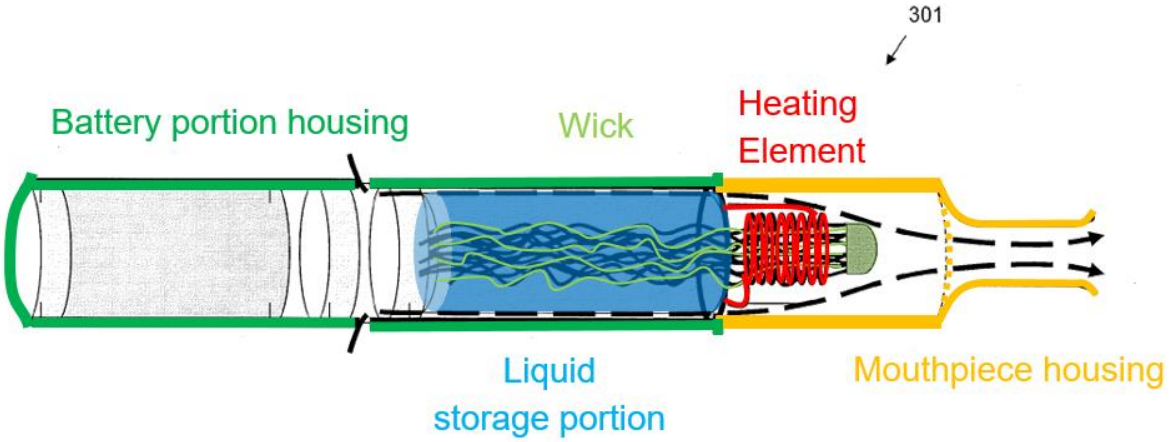

EX1002 (Thorens231), Fig. 3.

466. Second, Thorens788 discloses that its heating element is disposed entirely within the battery housing (EX1004, Fig. 4) while Thorens231 depicts its heating element outside the battery housing (EX1002, Fig. 3). Despite these minor

NJOY Exhibit 1005.245

differences, it is still my opinion that the two Thorens references described substantially the same.

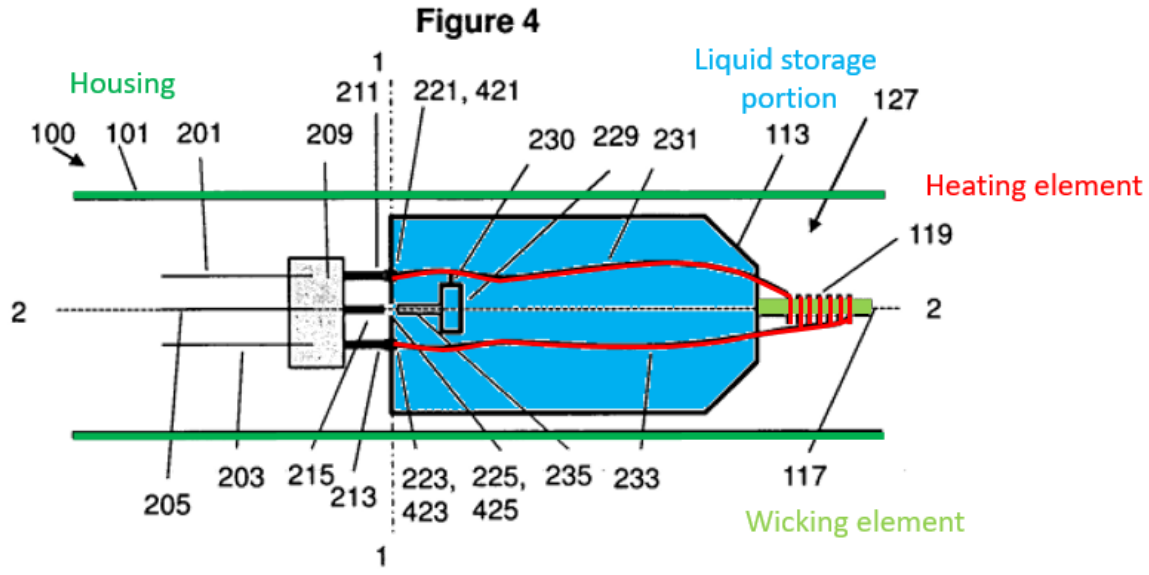

EX1004 (Thorens788), Fig. 4

467. It is my opinion that a POSA would have been motivated to modify Thorens788's smoking system to incorporate a mouthpiece housing because Thorens788 discloses that its mouthpiece is replaceable, and without a housing to protect the heating element, a consumer would have to pull on the heating element to remove the mouthpiece, which may burn the consumer if the heating element is not completely cooled down and also is an inconvenience and unsanitary. EX1004, 10:30-31 ("Preferably, the mouthpiece is replaceable."). Specifically, a POSA would have been motivated to incorporate Thorens231's mouthpiece housing because Thorens788 already discusses a mouthpiece housing, and it would have been natural

NJOY Exhibit 1005.246

for a POSA to consider Thorens231, which is directed to substantially the same invention and shares common inventors with Thorens788. A POSA would have been motivated to modify Thorens788, for example, as illustrated below:

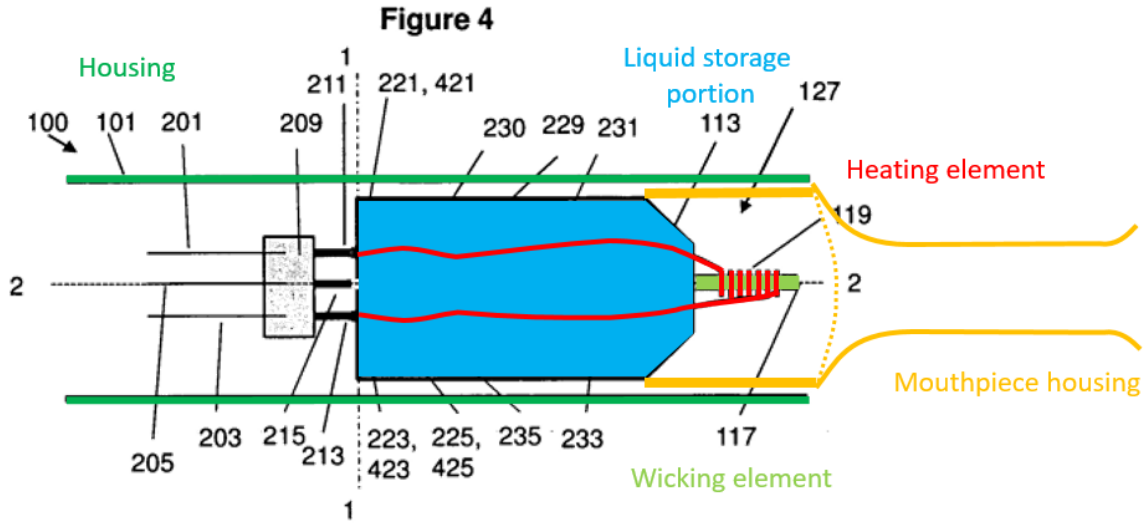

2. Claim 1

a. <u>[1.A] A vaporizer device comprising:</u>

468. It is my opinion that Thorens788 discloses this limitation.

469. Thorens788 discloses that its invention is "relate[d] to an aerosol generator and to a smoking system." EX1004, 1:4. Specifically, Thorens788 discloses that "[i]n use, …liquid…is vaporized…to form a supersaturated vapour.". EX1004, 6:22-23 ("In use, when the heater is activated, liquid provided by the liquid storage portion is vaporized by the heater to form a supersaturated vapour."); 7:16-18 ("When the heater is activated, the liquid at the second end of the capillary wick

is vaporized by the heater to form the supersaturated vapour."). Therefore, it is my opinion that Thorens788 discloses a vaporizer device.

b. <u>[1.B] a battery portion having an outer shell and a chamber defined by the outer shell; and</u>

470. It is my opinion that Thorens788 discloses this limitation.

471. Thorens788 discloses an aerosol generating system 100 which is a battery portion because it houses a battery. EX1004, 9:21-26 ("In one embodiment, the aerosol generating system is a smoking system….In that embodiment, the smoking system may further comprise an electric power supply. Preferably, the electric power supply comprises a cell contained in a housing. The electric power supply may be a Lithium-ion battery or one of its variants, for example a Lithium-ion polymer battery."); EX1004, 12:8-11 ("The aerosol generating system 100 of Figure 1 is an electrically heated aerosol generating system 100 and comprises a housing 101 having a mouthpiece end 103 and a body end 105. In the body end 105, there is provided an electric power supply in the form of a battery 107…"); *see also* Section VI.C, *supra*.

472. Thorens788 discloses that the aerosol generating system 100 has a housing 101 which is the recited outer shell. EX1004, 12:8-11 ("The aerosol generating system 100 of Figure 1 is an electrically heated aerosol generating system 100 and comprises a housing 101 having a mouthpiece end 103 and a body end 105. In the body end 105, there is provided an electric power supply in the form of a

battery 107 and electric circuitry in the form of circuitry 109 and a puff detection system, not shown.”). Thorens788 also refers to the housing as a “shell.” EX1004, 10:25-28 (“Preferably, the smoking system comprises a housing. The housing may comprise a shell and a mouthpiece….In the case of an electrically heated smoking system, preferably, the electric power supply and the electric circuitry are contained in the shell.”).

473. As depicted in Figure 2, reproduced below, the housing 101 defines a chamber 127. EX1004, 12:17-18 (“The housing 101 also includes an air inlet 123, an air outlet 125 at the mouthpiece end and a chamber in the form of aerosol forming chamber 127.”).

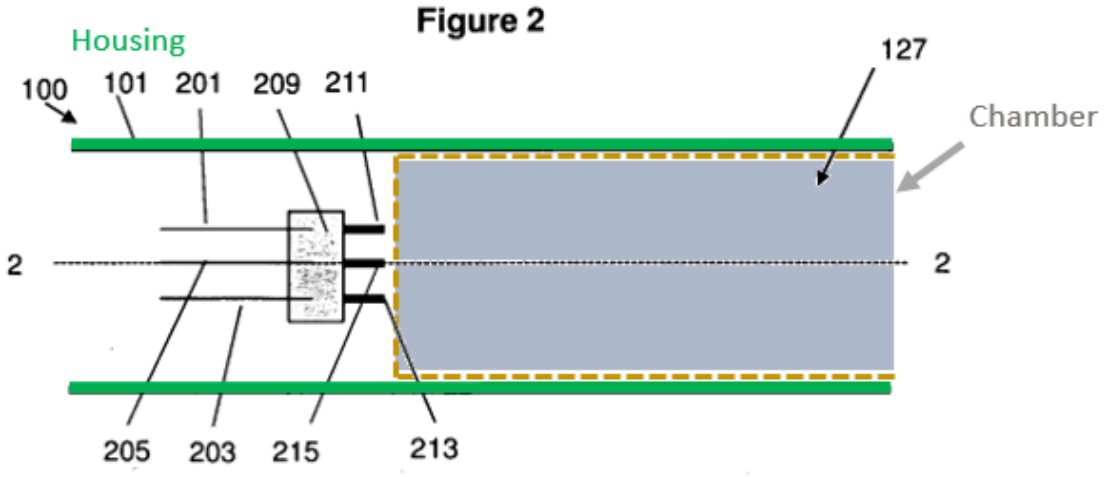

EX1004, Fig. 2

NJOY Exhibit 1005.249

474. Thorens788 discloses that the chamber 127 is for receiving a cartridge containing a heating element and liquid. EX1004, 12:12-15 ("In the mouthpiece end 103, there is provided a liquid storage portion or cartridge 113 containing liquid 115, a capillary wick 117 and a heating element in the form of a heating coil 119. A first end of the capillary wick 117 extends into the cartridge 113 and a second end of the capillary wick 117 is at least partially surrounded by the heating coil 119.").

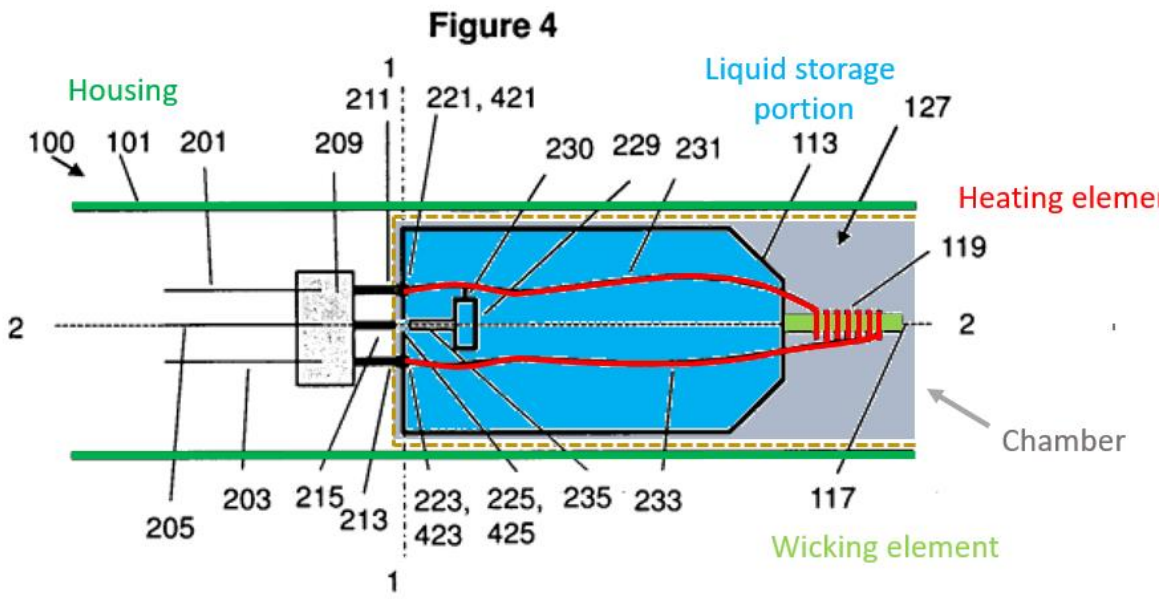

EX1004, Fig. 4

c. <u>[1.C] a cartomizer having a mouthpiece end and an insertion end disposed opposite the mouthpiece end, the cartomizer comprising:</u>

475. It is my opinion that Thorens788 in view of Thorens231 renders obvious this limitation.

NJOY Exhibit 1005.250

476. Thorens788 discloses a single component cartridge 113 (also referred to as liquid storage portion) containing liquid 115 and a heating coil 119. EX1004, 12:12-13 ("In the mouthpiece end 103, there is provided a liquid storage portion or cartridge 113 containing liquid 115, a capillary wick 117 and a heating element in the form of a heating coil 119."); *id.*, 1:35-36 ("The liquid storage portion may further comprise a heating element. Preferably, the heating element is integral to the liquid storage portion."). Therefore, it is my opinion that cartridge 113 is a "cartomizer." *See* EX1033, [0008] ("The cartomizer replaces the separate cartridge and atomizer components with a single integrated component").

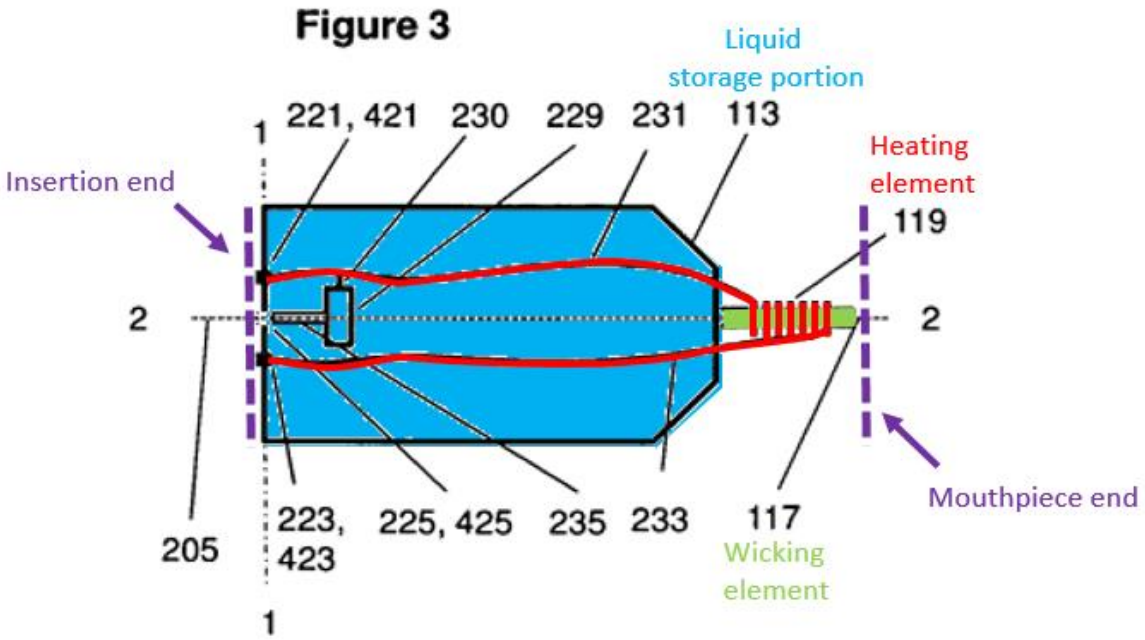

EX1004, Fig. 3

477. As I explained above in Section IX.F.1.a, a POSA would have been motivated to modify Thorens788's cartridge to incorporate Thorens231's

mouthpiece housing to protect the heating element. The modified cartridge is a cartomizer because it contains the same heating coil and vaporizable liquid.

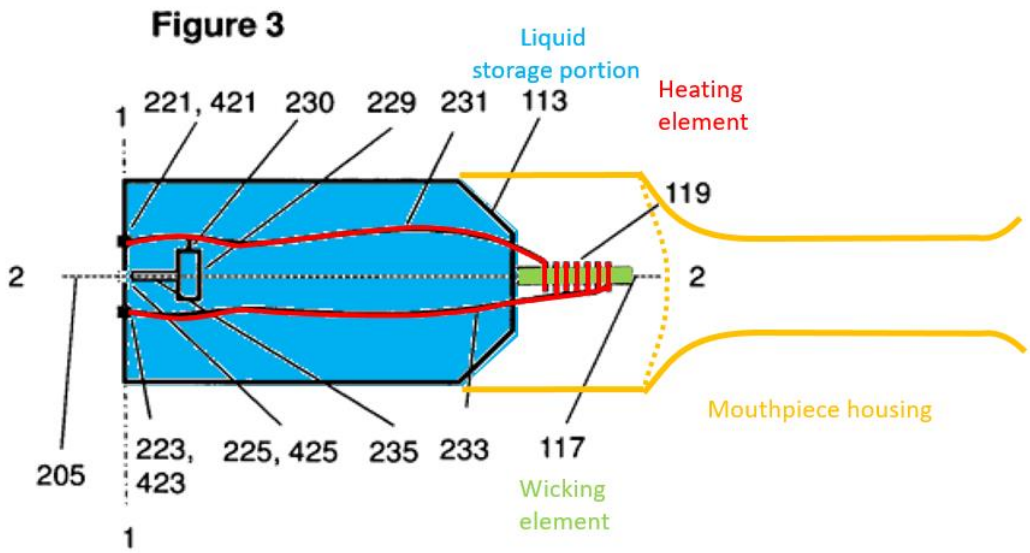

478. As shown below, the modified cartomizer comprises a mouthpiece end and an insertion end disposed opposite the mouthpiece end.

NJOY Exhibit 1005.252

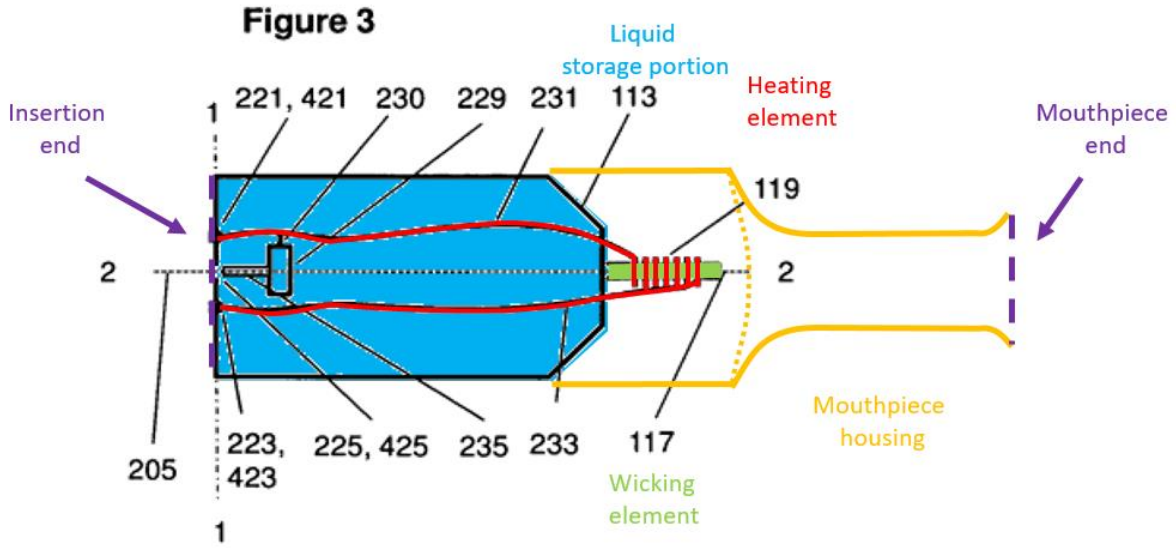

479. A POSA would have understood the right-most end to be a mouthpiece end because that is where a consumer places his or her mouth when using the device. *See* [1.I], *infra*. A POSA would have understood the left-most end to be an insertion end because that is where the cartomizer is inserted into the chamber 127.

d. <u>[1.D] a cartomizer body having a volume defined therein, the volume configured to hold a fluid vaporizable substance,</u>

480. It is my opinion that Thorens788 in view of Thorens231 renders obvious this limitation.

481. Thorens788 discloses a liquid storage portion. *See* Fig. 3.

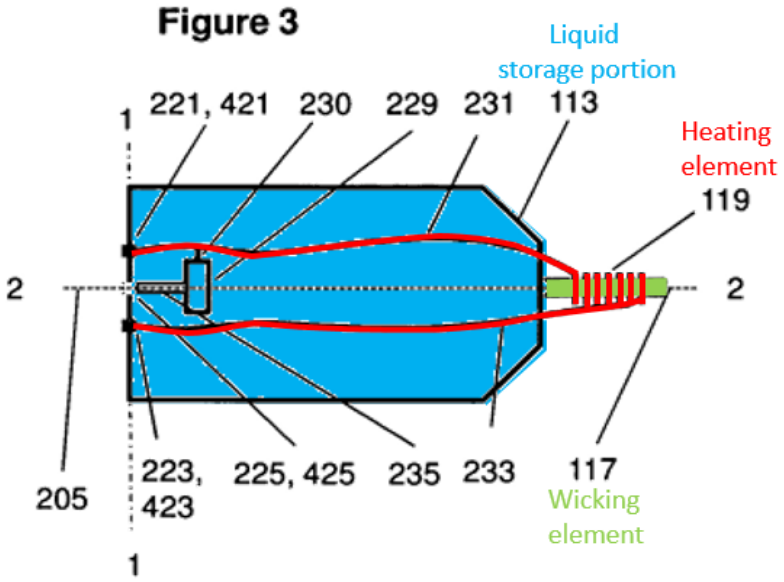

EX1004, Fig. 1

482. And Fig. 2 of Thorens231 depicts a mouthpiece housing to protect the heating element and the capillary wick:

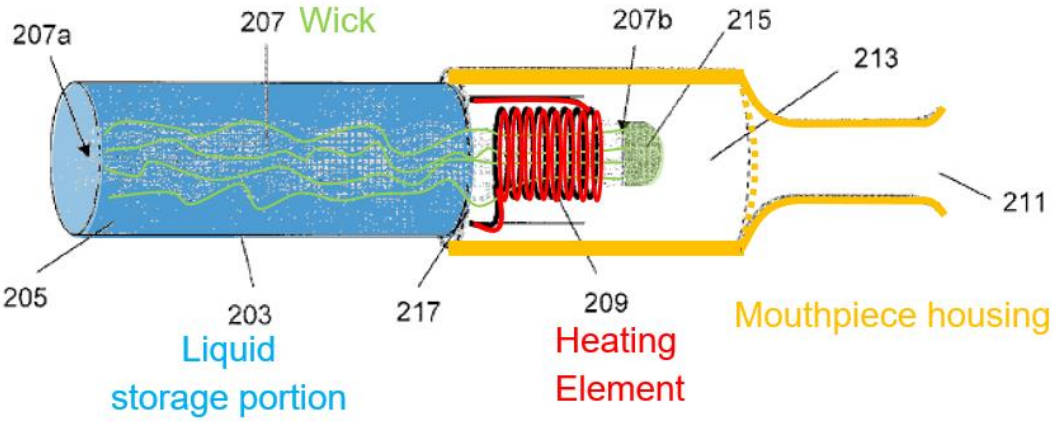

EX1002, Fig. 2

NJOY Exhibit 1005.254

483. As I explained above, a POSA would have been motivated to incorporate Thorens231's mouthpiece housing as illustrated in Figure 2. EX1002, Fig. 2; Section VIII.E.1.c. Thorens788, when modified with Thorens231's mouthpiece housing, provides a cartomizer "body" (mouthpiece housing combined with cartridge) having a liquid storage portion 113 (the recited "structure") configured to hold liquid 115 (the recited "vaporizable liquid"). EX1004, 12:12-13 ("In the mouthpiece end 103, there is provided a ***liquid storage portion or cartridge 113 containing liquid 115***, a capillary wick 117 and a heating element in the form of a heating coil 119.") (emphasis added); *id.*, 12:19-25 ("Liquid 115 is transferred by capillary action from the cartridge 113 from one end of the wick 117 which extends from the cartridge to another end of the wick 117 which is surrounded by the heating coil 119…. The liquid in that end of the wick 117 is vaporized by the heating coil 119 to create a supersaturated vapour.").

NJOY Exhibit 1005.255

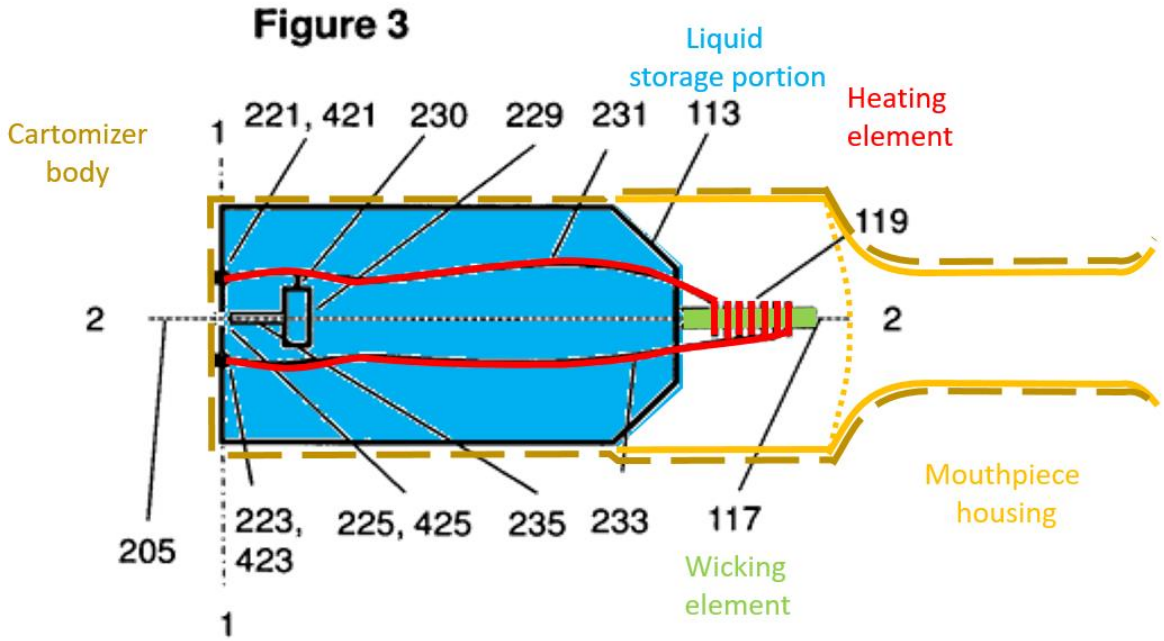

e. <u>[1.E] wherein at least a portion of the cartomizer body comprises a translucent material configured to allow viewing of the fluid vaporizable substance,</u>

484. It is my opinion that Thorens788 in view of Thorens231 discloses and renders obvious this limitation.

485. Thorens788 discloses that the cartridge 113 may optionally comprise a non-opaque container. EX1004, 7:23-27 ("The liquid storage portion is preferably a container….***Preferably***, the container is opaque, thereby limiting degradation of the liquid by light."). While Thorens788 discloses that the container of the liquid storage portion is preferably opaque, a POSA would have understood the preference to mean that the container may be optionally not opaque (*i.e.*, translucent). Therefore, Thorens788 discloses this limitation.

486. Alternately, Thorens231 discloses that its cartridge may be made of glass. EX1002, 7:33-35 ("The cartridge 203 can be made from any suitable material. Examples include glass and plastic polymers such as PET or others used in the pharmaceutical or food industries."). A POSA would have understood glass to be a translucent material allowing viewing of the liquid material therein. Thus, Thorens788's device, when incorporating Thorens231's mouthpiece, provides a cartomizer body comprising a translucent material configured to allow viewing of the fluid vaporizable substance. Therefore, Thorens788 in view of Thorens231 renders this limitation obvious.

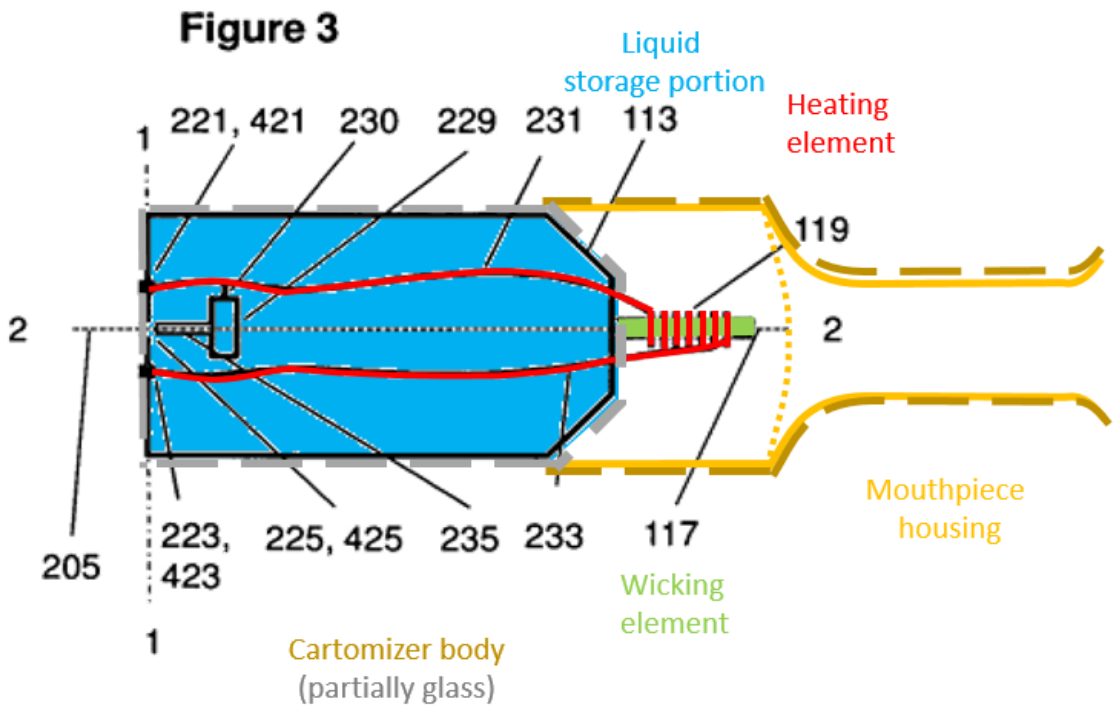

NJOY Exhibit 1005.257

487. Moreover, it would have been obvious to a POSA to use a translucent material to construct the liquid container of Thorens788. A POSA would have been motivated to make Thorens788's cartridge translucent for the same reasons I explained above with respect to Ground 1 and Liu783. Moreover, Thorens788 discloses a refillable liquid container, and a POSA would have been further motivated to use a transparent container so that a consumer may more easily refill the cartridge. EX1004, 7:29 ("Alternatively, the liquid storage portion may be refillable."). Indeed, Thorens788 discloses that a translucent cartridge container is a design choice from a finite number of choices. EX1004, 7:26-27 ("Preferably, the container is opaque, thereby limiting degradation of the liquid by light."), While Thorens788 expresses a preference for an opaque container to limit exposure to light, a POSA would have understood that the same function may be fulfilled by constructing the container using a tinted glass, which is translucent.

f. [1.F] wherein the cartomizer body is configured for insertion into the chamber such that at least part of the volume is positioned in the chamber when the cartomizer body is inserted into the chamber;

488. It is my opinion that the combination of Thorens788 and Thorens231 renders obvious this limitation.

489. As I explained above, the cartomizer body (Thorens231's mouthpiece housing containing Thorens788's cartridge 113) is configured for insertion into the chamber 127. As shown below, when the cartomizer body is inserted into the

chamber 127, the liquid storage portion 113 ("volume") of the cartomizer is positioned within the receiving chamber 127. EX1004, 15:15-16 ("Figure 4 shows the liquid storage portion 113 of Figure 3 inserted into the aerosol generating system 100 of Figure 2.").

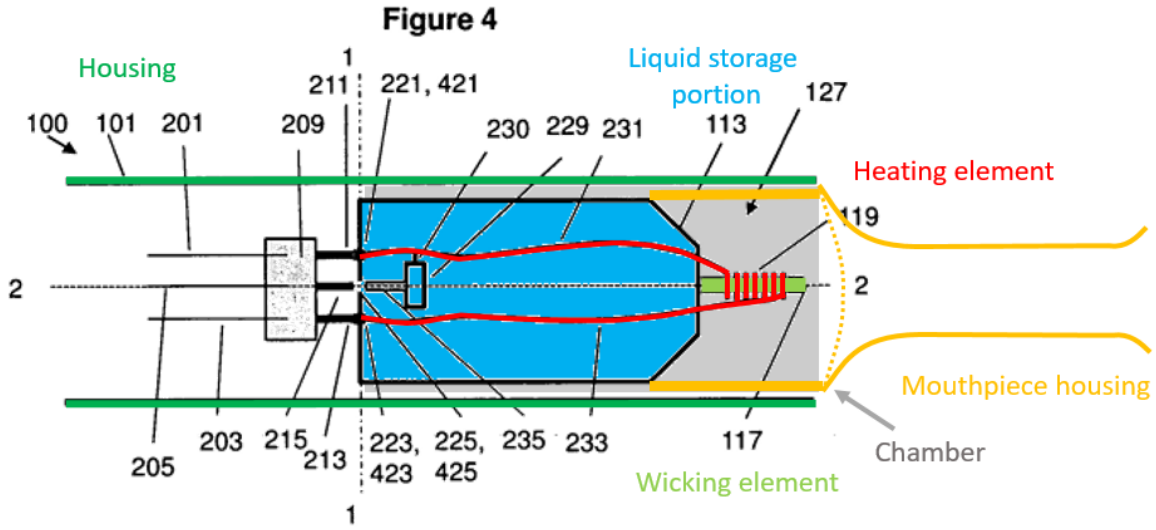

g. <u>[1.G] a heating element and a wicking element within the cartomizer body;</u>

490. It is my opinion that the combination of Thorens788 and Thorens231 renders obvious this limitation.

491. Thorens788 discloses a mouthpiece housing containing the capillary wick and the heating element. EX1004, 10:25-26 ("Preferably, the smoking system comprises a housing. The housing may comprise a shell and a mouthpiece."), 10:28-29 ("Preferably, the liquid storage portion, the capillary wick, the at least one heater

and the air outlet are contained in the mouthpiece."), 10:31 ("Having a shell and a separate mouthpiece provides a number of advantages."). However, Thorens788 does not illustrate a mouthpiece protecting the heating element and capillary wick. A POSA would have looked to Thorens231, which illustrates these components protected by a mouthpiece housing, and would have been motivated to incorporate Thorens231's mouthpiece housing with Thorens788's device. *See* Section IX.F.1.a.

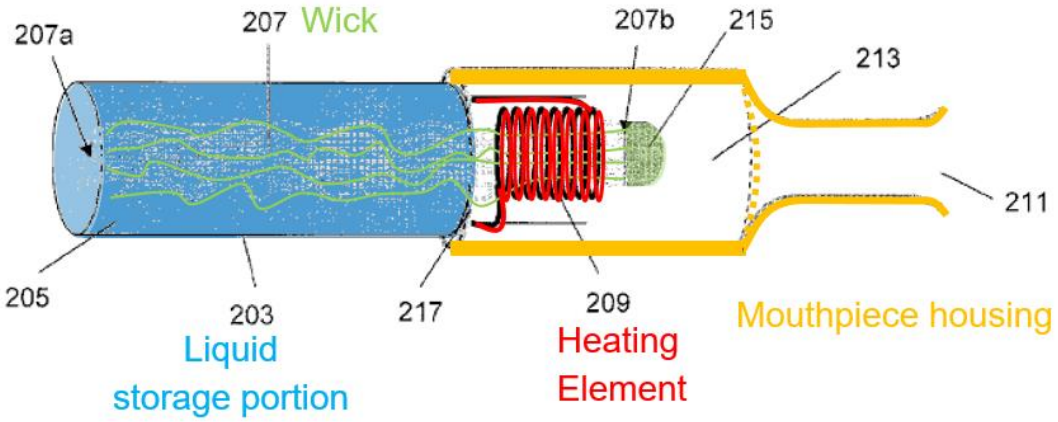

492. Thus, the combination of Thorens788 and Thorens231 renders obvious a heating element and a wicking element protected within a cartomizer body. *See* Section IX.F.1.a.

NJOY Exhibit 1005.260

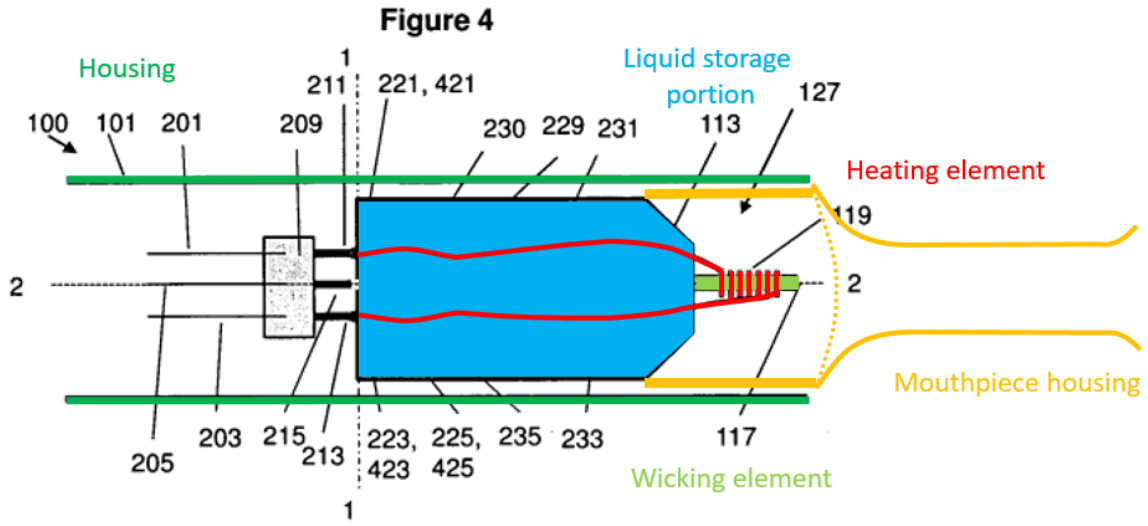

493. I note that Thorens788's heating element 119 is consistent with the adopted construction because Thorens788's heating element is a "conductive material shaped into a wire, coil, or flat ribbon that generates heat in response to current[.]" EX1049.003. Specifically, Thorens788 discloses that its heating element may be a "heating coil" which receives energy from the battery, and vaporizes liquid in response. EX1004, 12:23-25 ("The battery 107 supplies electrical energy to the heating coil 119 to heat the end of the wick 117 surrounded by the heating coil. The liquid in that end of the wick 117 is vaporized by the heating coil 119 to create a supersaturated vapour.").

494. I further note that Thorens788's wicking element is consistent with the adopted construction because Thorens788's wick 117 is "any material through which liquid may be drawn via capillary action[.]" EX1049.003. Specifically, Thorens788's capillary wick 117 draws liquid by "capillary action from the cartridge

113 from one end of the wick 117 which extends from the cartridge to another end of the wick 117 which is surrounded by the heating coil 119." EX1004, 12:19-21.

495. Concerning the construction proposed by Petitioner in the related Section 337 Investigation (but not adopted here), Thorens788 discloses that capillary wick 117 is "a plurality of fibres or threads" which transfers liquid by "capillary action." EX1004, 7:32-33 ("For example, the capillary wick may comprise a plurality of fibres or threads."); EX1004, 12:19-21 ("Liquid 115 is transferred by capillary action from the cartridge 113 from one end of the wick 117 which extends from the cartridge to another end of the wick 117 which is surrounded by the heating coil 119"). In light of this disclosure, it is my opinion that a POSA would have known this wick was a pliable bundle of fibers for drawing liquid by capillary action.

h. <u>[1.H] an inhalation tube in fluid communication with the heating element and the wicking element;</u>

496. It is my opinion that Thorens788 in view of Thorens231 renders obvious this limitation.

497. Thorens231 discloses "an aerosol forming chamber [213] between the second end of the capillary wick [207b] and the air outlet [211][.]" EX1002, 5:63-64. Thorens231 further discloses that in use, the heating element vaporizes the liquid in the second end 207b of the wick to form vapor. EX1002, 7:2-4 ("The liquid in the second end 207b of the wick 207 is vaporized by the heating coil 209 to create a supersaturated vapor."). Then, the vapor is "carried in the air flow from the air inlets

NJOY Exhibit 1005.262

115 towards the aerosol forming chamber 213." EX1002, 7:8-9. Thus, Thorens231 discloses that the aerosol forming chamber 213 is in fluid communication with the heating element and the wicking element.

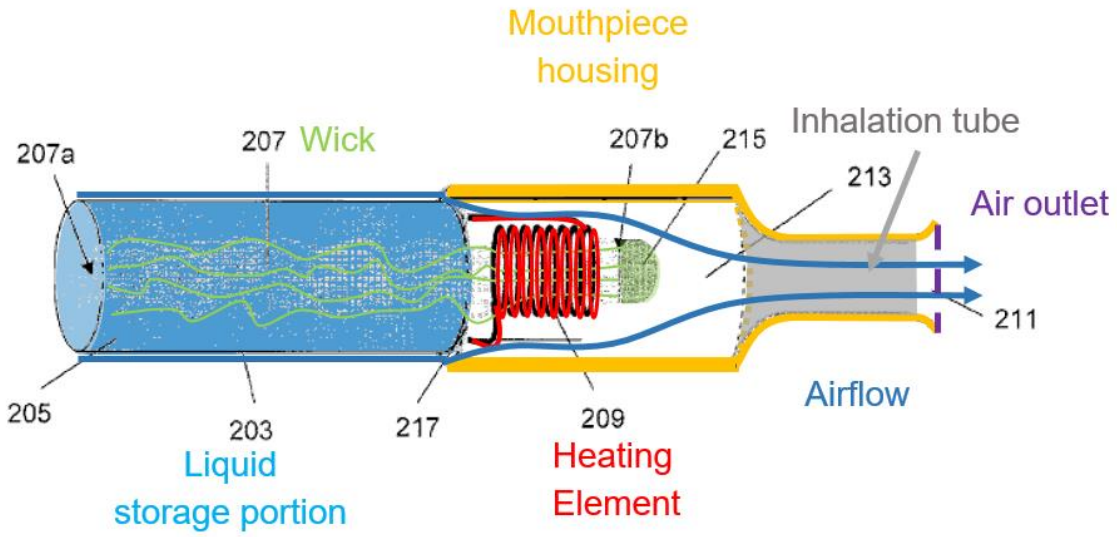

EX1002, Fig. 2.

498. As shown below, Thorens788's cartridge, when modified to add Thorens231's mouthpiece housing, also comprises a chamber extending between an end of the wick proximal to the air outlet and the air outlet. Because the airflow path, liquid storage portion, heating element, wicking element, and mouthpiece shell are positioned in a substantially identical manner in the as-modified device and Thorens231's device, a POSA would have understood that the chamber of the as-modified device similarly is in fluid communication with the heating element and the wicking element, and is the recited "inhalation tube."

NJOY Exhibit 1005.263

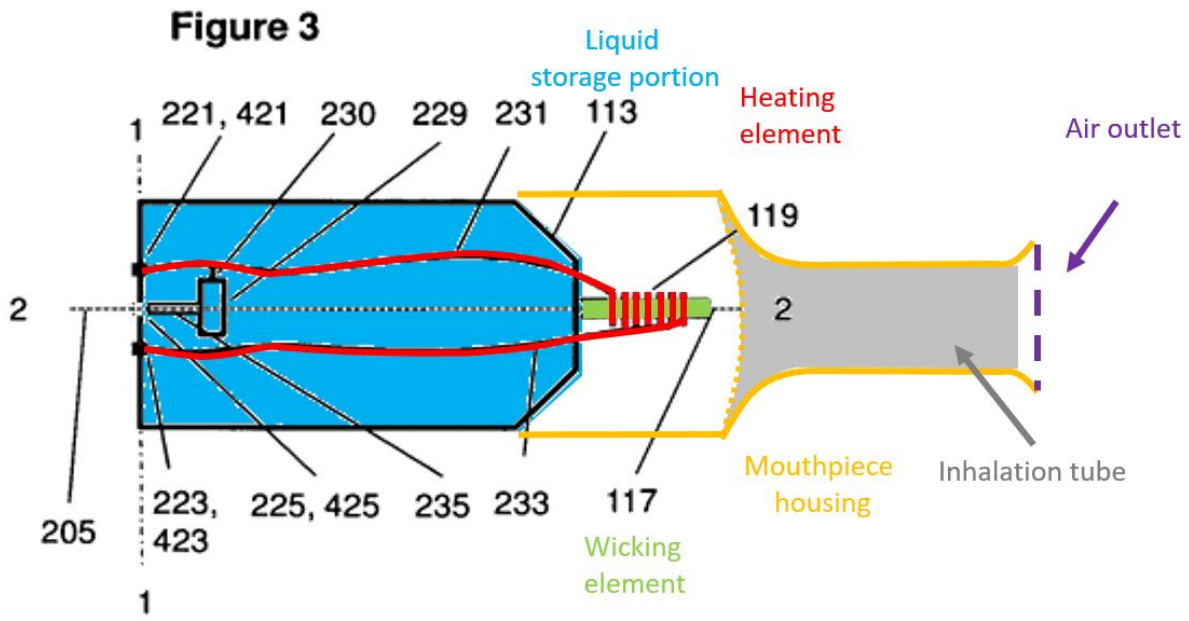

i. <u>[1.I] a mouthpiece at or proximate to the mouthpiece end, the mouthpiece in fluid communication with the inhalation tube; and</u>

499. It is my opinion that the combination of Thorens788 and Thorens231 renders obvious this limitation.

500. As I explained above with respect to limitation [1.H], Thorens231 discloses an inhalation tube which directs vapor from the heating element and wicking element to the air outlet. Furthermore, Thorens231 discloses that a consumer inhales the vapor from air outlet 211. EX1002, 7:7-12 ("The supersaturated vapor created is mixed with and carried in the air flow from the air inlets 115 towards the aerosol forming chamber 213. In the aerosol forming chamber 213, the vapor condenses to form an inhalable aerosol, which is carried towards the outlet 211 and into the mouth of a user."). A POSA would have understood that in

use, a consumer would place his or her lips around air outlet 211, and the area proximate to the outlet is a mouthpiece.

501. As shown below, Thorens788's device incorporating Thorens231's mouthpiece housing comprises the same mouthpiece at or proximate the mouthpiece end. Moreover, as in Thorens231, the mouthpiece of the modified device is similarly in fluid communication with the inhalation tube.

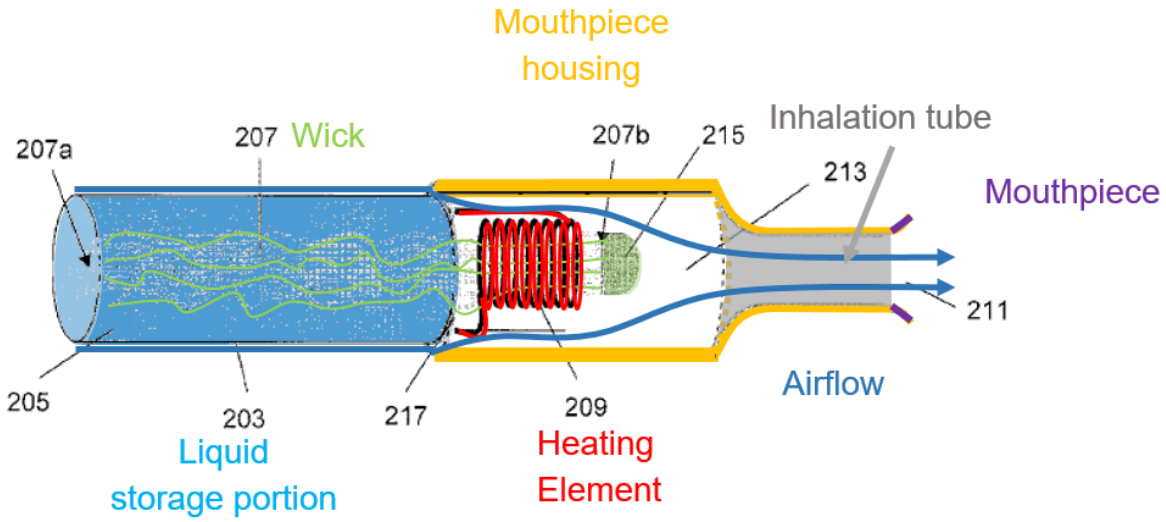

EX1002, Fig. 2

NJOY Exhibit 1005.265

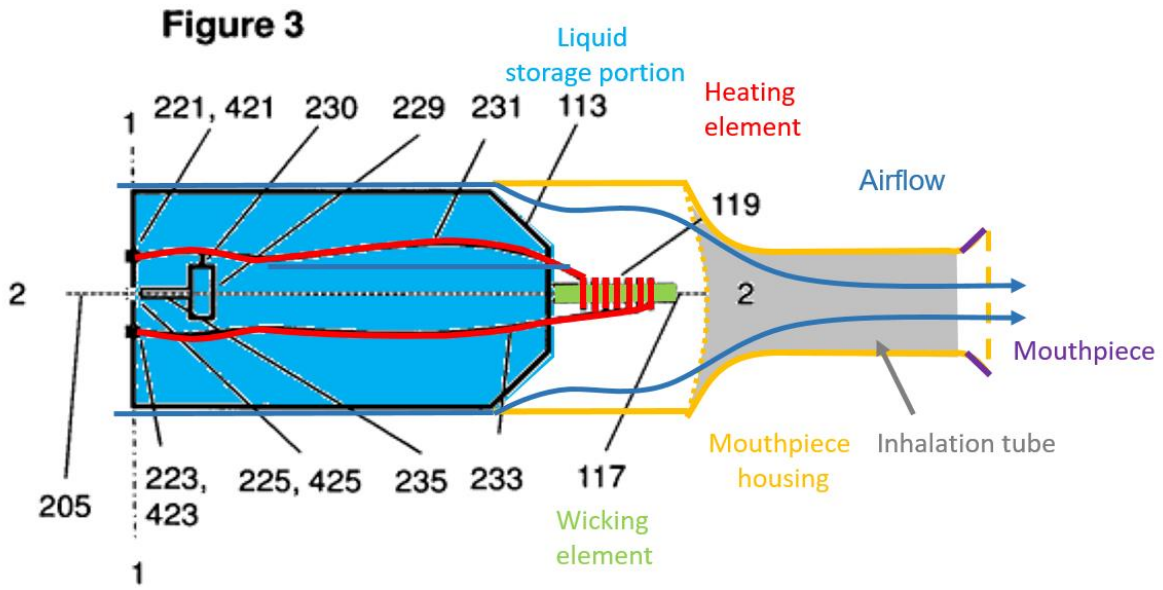

j. <u>[1.J] a plurality of cartomizer electrical contacts on an exterior of the insertion end,</u>

502. It is my opinion that Thorens788 discloses this limitation.

503. Thorens788 discloses that its cartridge comprises three electrical contacts on an exterior of the insertion end. EX1004, 14: 6-8 ("The liquid storage portion 113 comprises first, second and third electrical contacts 221 or 421, 223 or 423, 225 or 425 at a first end of the liquid storage portion."), 16:9-10 ("In one embodiment shown in Figure 5, the electrical contacts 221, 223, 225 on the liquid storage portion are arranged in a row or substantially straight line.").

Figure 5

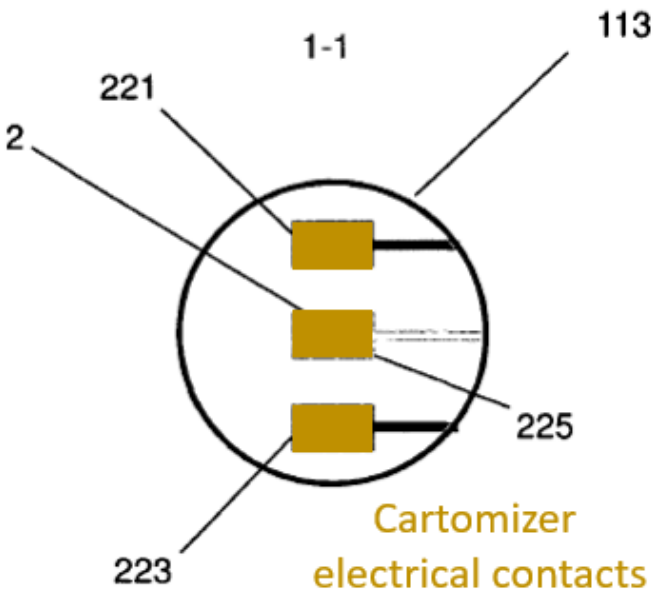

EX1004, Fig. 5.

504. As shown below, the modified Thorens788 device comprises the same cartomizer electrical contacts on an exterior of the insertion end of the mouthpiece housing.

NJOY Exhibit 1005.267

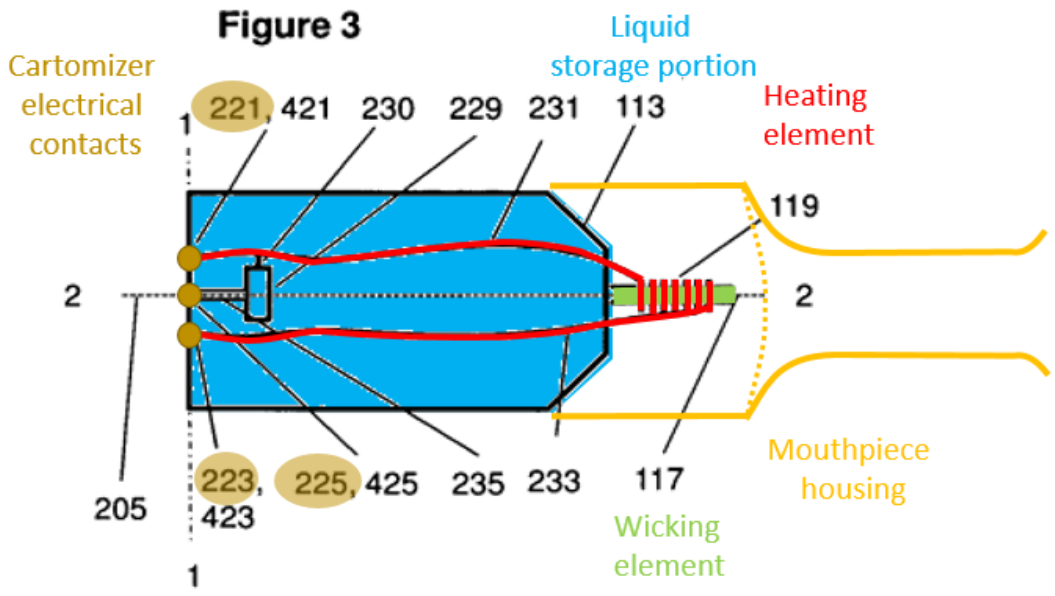

k. <u>[1.K] wherein the plurality of cartomizer electrical contacts is positioned to contact a plurality of battery electrical contacts at a base end of the chamber when the cartomizer body is inserted into the chamber.</u>

505. It is my opinion that Thorens788 discloses this limitation.

506. Thorens788 discloses that the aerosol generating system 100 (i.e., battery portion) comprises electrical contacts 211, 213, and 215. EX1004, 16:19-23 ("The electrical contacts mounted on the aerosol generating system are arranged in a similar arrangement to the electrical contacts mounted on the liquid storage portion 113, shown in Figure 5. Therefore, the corresponding electrical contacts 211, 213, 215 on the aerosol generating system 100 are also arranged in a row or substantially straight line. In this embodiment, each electrical contact 211, 213, 215 is equidistant

from its neighbouring contact.”). As shown below, the contacts 211, 213, and 215 are positioned at a base end of the chamber.

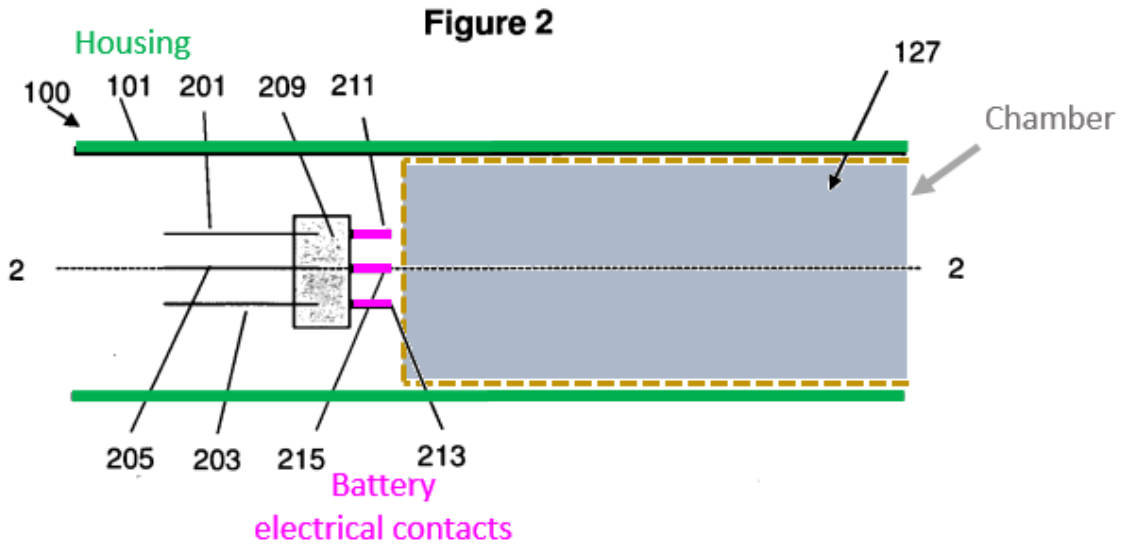

Ex1004, Fig. 2

507. Thorens788 further discloses that the battery contacts 211, 213, and 215 are configured for contacting corresponding cartomizer contacts 221, 223, and 225 when the cartridge is inserted into the chamber. EX1004, 13:25-27 (“The electrically conductive elements 201, 203, 205 and electrical connectors 211, 213, 215 allow electrical signals to pass between the circuitry 109 and liquid storage portion 113.”); 15:5-7 (“When a liquid storage portion is inserted into the aerosol generating system, electrical contacts 221, 223 on the liquid storage portion and two electrical contacts 211, 213 on the aerosol generating system 100 allow electrical energy to be transmitted to the heating element 119.”).

NJOY Exhibit 1005.269

508. As shown below, the modified Thorens788 device comprises the same battery electrical contacts.

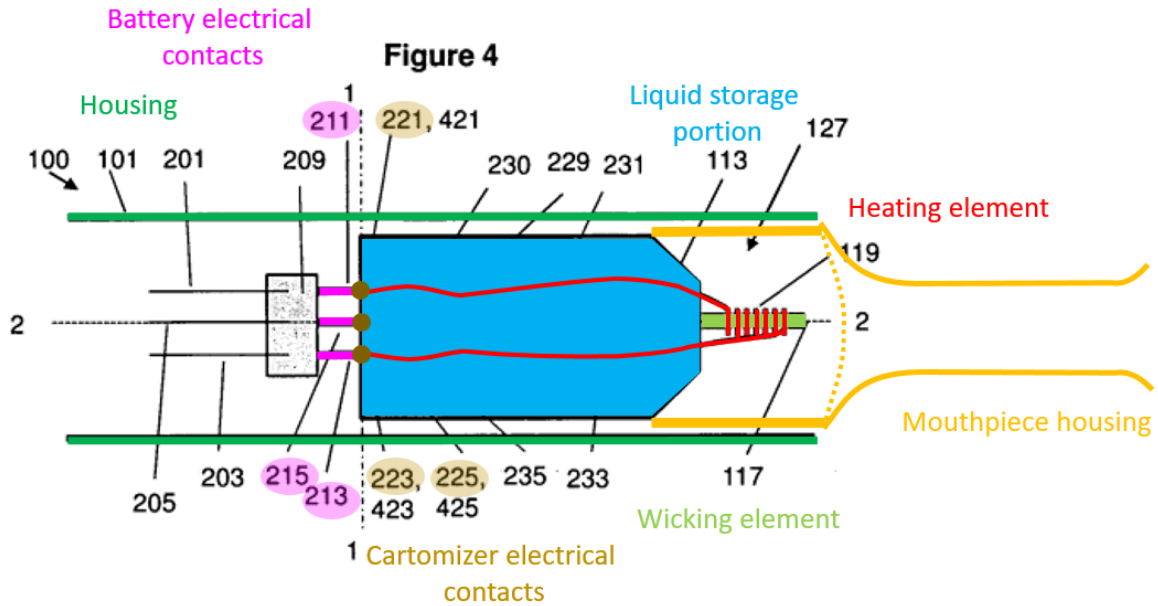

3. Claim 13

a. [13.A] A vaporizer device comprising:

509. *See* limitation [1.A].

b. [13.B] a battery portion having an outer shell and a chamber defined by the outer shell; and

510. *See* limitation [1.B].

c. [13.C] a cartomizer having a mouthpiece end and an insertion end disposed opposite the mouthpiece end, the cartomizer comprising:

511. *See* limitation [1.C].

NJOY Exhibit 1005.270

d. <u>[13.D] a cartomizer body having a volume defined therein, the volume configured to hold a vaporizable substance,</u>

512. *See* limitation [1.D].

e. <u>[13.E] wherein the vaporizable substance is in a fluid state,</u>

513. *See* limitation [1.D].

f. <u>[13.F] wherein the cartomizer body is configured for insertion into the chamber such that at least part of the volume is positioned in the chamber when the cartomizer body is inserted into the chamber;</u>

514. *See* limitation [1.F].

g. <u>[13.G] a heating element within the cartomizer body;</u>

515. *See* limitation [1.G].

h. <u>[13.H] cartomizer electrical contacts operable to direct current to the heating element, wherein the cartomizer electrical contacts are on an exterior of the cartomizer body; and</u>

516. It is my opinion that Thorens788 discloses this limitation.

517. As I explained above with respect to limitation [1.J], Thorens788 discloses three cartomizer electrical contacts on an exterior of the insertion end of the cartomizer. Thorens788 further discloses that, "[w]hen a liquid storage portion is inserted into the aerosol generating system, electrical contacts 221, 223 on the liquid storage portion and two electrical contacts 211, 213 on the aerosol generating system 100 allow electrical energy to be transmitted to the heating element 119."

EX1004, 15:5-7; 16:9-10 ("In one embodiment shown in Figure 5, the electrical contacts 221, 223, 225 on the liquid storage portion are arranged in a row or substantially straight line."). Therefore, the cartomizer electrical contacts are operable to direct current to the heating element.

Figure 5

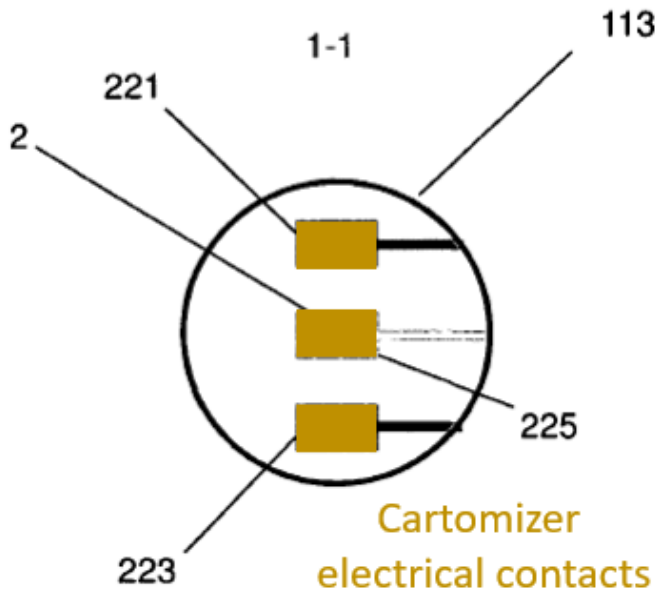

EX1004, Fig. 5.

NJOY Exhibit 1005.272

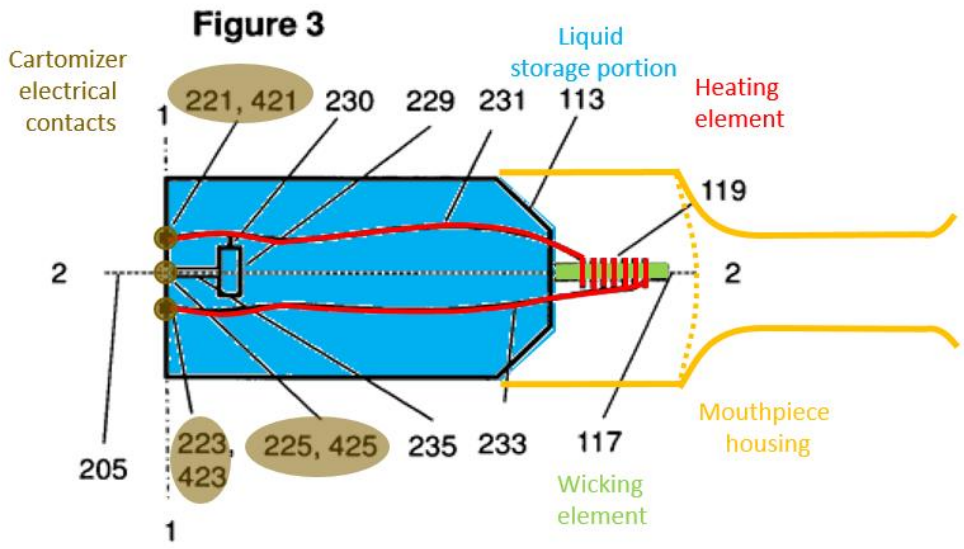

i. [13.I] a wicking element inside the cartomizer body, the wicking element configured to absorb the vaporizable substance;

518. *See* limitation [1.G].

j. [13.J] an inhalation tube in fluid communication with the heating element and the wicking element; and

519. *See* limitation [1.H].

k. [13.K] a mouthpiece at or proximate to the mouthpiece end, the mouthpiece in fluid communication with the inhalation tube.

520. *See* limitation [1.I].

4. Claim 14: [14.A] The cartomizer of claim 13, wherein at least a portion of the cartomizer body comprises a translucent material configured to allow viewing of the fluid vaporizable substance.

521. *See* limitation [1.E].

5. Claim 15: [15.A] The cartomizer of claim 13, wherein the vaporizable substance comprises a liquid comprising nicotine.

522. It is my opinion Thorens788 discloses this limitation.

523. Thorens788 discloses that "In one embodiment, the liquid may comprise nicotine." EX1004, 20:18-19, 26:8-9.

6. Claim 16: The cartomizer of claim 13, wherein cartomizer electrical contacts are positioned to contact a plurality of battery electrical contacts at a base end of the chamber when the cartomizer body is inserted into the chamber.

524. *See* limitation [1.K].

G. Ground 5: Thorens788 and Thorens231 further in view of Levin

525. It is my opinion that Claim 5 of the '981 Patent is unpatentable under 35 U.S.C. § 103 on the ground that it is rendered obvious by Thorens788 and Thorens231, and further in view of and Levin.

1. Motivation to Combine

a. <u>Magnetic Coupling</u>

526. Thorens788 discloses that the battery portion and the cartomizer are releasably locked together. EX1004, 10:36-11:1 ("Preferably, the shell and mouthpiece are arranged to releasably lock together when engaged."). Thorens788, however, does not disclose magnet coupling the cartomizer and battery portions.

527. Magnetically coupling e-vapor devices were extremely common in the art prior to 2013.

NJOY Exhibit 1005.274

> An object of the present invention is to provide an electronic cigarette with magnetic connection which makes assembly of the electronic cigarette convenient and quick.
>
> ***
>
> One example embodiment of an aerosol delivery device 100 is provided in FIG. 1. As seen in the cross-section illustrated therein, the aerosol delivery device 100 can comprise a control body 102 and a cartridge 104 that can be permanently or detachably aligned in a functioning relationship. Although a threaded engagement is illustrated in FIG. 1, it is understood that further means of engagement may be employed, such as a press-fit engagement, interference fit, a magnetic engagement, or the like[.]

See e.g., EX1025, [0003]; EX1026, 6:15-23.

528. For example, Levin discloses an e-cigarette with mouthpiece detachable from its power source, in which a portion of the mouthpiece is referred to as the proximal grinder portion and a portion of the power source referred to as a distal grinder portion.

> In an example embodiment, such as shown in FIGS. 1A-1B, the device includes a main body 2 having a main body housing 20 that encases the internal components, such as the power source (e.g. batteries), a USB receptacle for recharging, a distal light Source or LED, the heating unit, and at least a portion of a grinding chamber (the remaining portion often being attached to a removable portion or to a proximal portion having a mouthpiece).
>
> ***
>
> Generally, and as shown in the embodiment of FIGS. 9A-9B, the device includes a grinder 40 comprising a separable distal grinder portion 42 and proximal grinder portion 44, the distal portion 42 being disposed on a proximal end of the main body 2, and the proximal grinder portion 44 being disposed on the distal end of a proximal portion having a mouthpiece portion 1.

NJOY Exhibit 1005.275

> ***
>
> Often, the proximal grinder portion includes one or more magnets interfaceable with one or more corresponding magnets in the distal grinder portions, configured so that when the magnets are interfaced, the undulating surfaces of each portion are interfaced, and when the magnets are separated, the undulating surfaces of each portion are separated

EX1003, 10:31-38, 19:35-41, 3:64-4:2.

529. As shown in the annotated figure below, four magnets located at the periphery of each grinder portion magnetically couple with each other; thus attaching the mouthpiece to the power source.

> In certain embodiments, the magnets 5 are used at inter facing portions of the distal grinding portion 42 and the proximal grinding portion 44, as shown in FIGS. 9A-9B, where the grinder portions come together. In this embodiment, there are four magnets 5 situated at each corner of each of the proximal and distal grinder portions. The magnets 5 help hold the two grinder pieces together to prevent contents from spilling (although the two grinder pieces may stay together under sheering force because the top piece slides over the bottom piece in a male/female connection) and provide a tactile response to users as they twist the proximal grinder portion so that users can more easily determine when the portions are aligned. Because the outer cross section of the grinder is a rounded square, as in the main body 2, the 4 corners align at 90 degree rotations. The interior cross section of the grinding chamber is substantially circular, so that the distal grinding portion 42 can rotate within the proximal grinding portion 44. It is understood that in some embodiments, the proximal grinding portion 44 can rotate within the distal grinding portion 42.

EX1003, 20:48-67.

NJOY Exhibit 1005.276

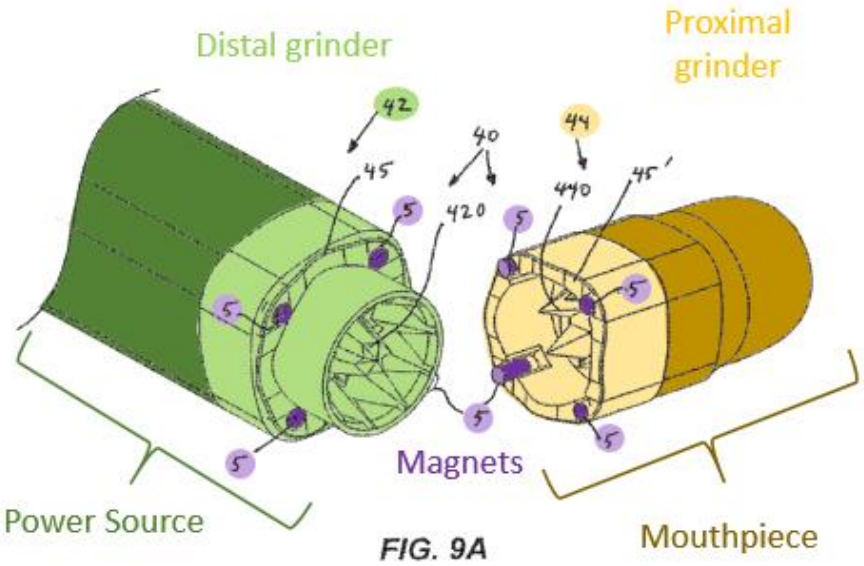

EX1003, Fig. 9A

530. In my opinion, there are several reasons that a POSA would have been motivated to incorporate a magnetic connection into Thorens788's device. First, magnetic coupling is simply easier and faster than threaded coupling. *See e.g.*, EX1025, [0003] ("An object of the present invention is to provide an electronic cigarette with magnetic connection which makes assembly of the electronic cigarette convenient and quick."). For example, manually screwing components together requires manual dexterity and strength on the part of the consumer. A person with poor grip strength may not be able to assemble or disassemble a threaded e-cigarette. Magnetic coupling requires simply dropping the cartridge. Additionally, screw threads are prone to damages through cyclic fatigue and over-torqueing, whereas magnetic connections are not. In particular, it is very common to overtighten a

NJOY Exhibit 1005.277

threaded connection. That can lead to stripping the threads or causing the cartomizer to "stick" in the threaded connection. Moreover, magnetic coupling is more reliable than friction fit designs which require precise and tight tolerances. If the components of a friction fit design are not aligned perfectly, the cartomizer can jam during insertion in to the battery portion. This could cause the consumer to force the cartridge into the receptacle or grow frustrated trying to find just the right angle to insert the cartridge.

531. Second, a POSA would have been motivated to use magnetic coupling because of the self-aligning nature of magnetic connections. *See*, e.g., EX1026, 6:15-24 (disclosing "an aerosol delivery device…compris[ing] a control body 102 and a cartridge 104 that can be…detachably aligned [via]…magnetic engagement"). In contrast, screw couplings require manual alignment and an exact number of turns to ensure connection. An adult consumer may, for instance, under or overtighten the components during coupling. EX1043. 22:63-67 ("[U]se of a threaded connection, as may be employed in other embodiments of aerosol delivery devices, may require unthreading the cartridge from the control body, which may take more time, and the strength required to decouple the cartridge from the control body[.]"). Magnetic connections have no such concerns.

532. It is my opinion that a POSA would modify Thorens788's battery portion to include magnets in or proximate to the cartomizer chamber. The magnets

could be placed directly at the base of the chamber or further down the device in switch 60 at a distance where the magnetic attraction would still accomplish the desired connection. It is also my opinion that a POSA would modify the mouthpiece of the combination of Thorens788 and Thorens231 to include corresponding magnets at a location in which they could be attracted to the magnets of the shell. A POSA would have understood that magnets have metallic surfaces, and thus when exposed, each magnet of the mouthpiece would constitute a recited "cartomizer metallic surface." The as-modified device is illustrated below.

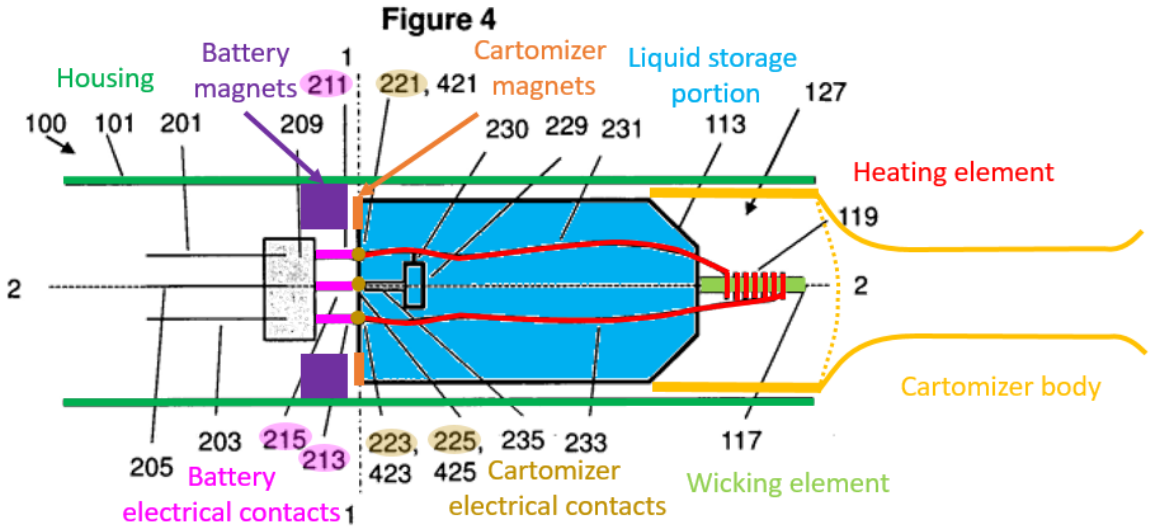

533. In my opinion, A POSA would have had a reasonable expectation of successfully adding magnets to the combination of Thorens788 and Thorens231. A POSA would have known that Levin's magnets could be added to Thorens to produce a functional device because all three references are directed to the same field, which is, generally, two-part electronic cigarettes. Combining Levin with

NJOY Exhibit 1005.279

Thorens is a predictable use of electronic vaporizer components according to their established functions.

2. Claim 5: The cartomizer of claim 1, wherein the cartomizer further comprises a structure that secures the cartomizer in the chamber, and wherein the structure comprises a cartomizer metallic surface configured to be attracted to at least one magnet in or proximate to the chamber.

534. It is my opinion that Thorens788, Thorens231, and Levin in combination renders obvious this limitation.

535. As I discussed above in Section IX.G.1a, it is my opinion that a POSA would have been motivated to incorporate Levin's disclosure of using magnets to connect the cartomizer and the battery portion into Thorens788's device for more convenient and secure connection. Moreover, a POSA would have understood that magnets may comprise a metallic surface.

H. Ground 6: Thorens788 and Thorens231 further in view of Tucker

536. It is my opinion that Claims 9-11 and 17-18 of the '981 Patent are unpatentable under 35 U.S.C. § 103 on the ground that they are rendered obvious by Thorens788 and Thorens231 further in view of Tucker.

1. Motivation to Combine

a. <u>Transparent Outer Shell</u>

537. As I explained above, Thorens788 in view of Thorens231 discloses and renders obvious a transparent cartridge. *See* Ground 4, [1.E]. A POSA would have understood that a transparent cartridge is beneficial because it allows consumers to

NJOY Exhibit 1005.280

view the amount of liquid in the cartridge. However, such benefit cannot be fully utilized in the Thorens788-Thorens231 combination because, as shown below, Thorens788's housing 101 extends to cover the entirety of the liquid container when the cartomizer is inserted into the aerosol generating system.

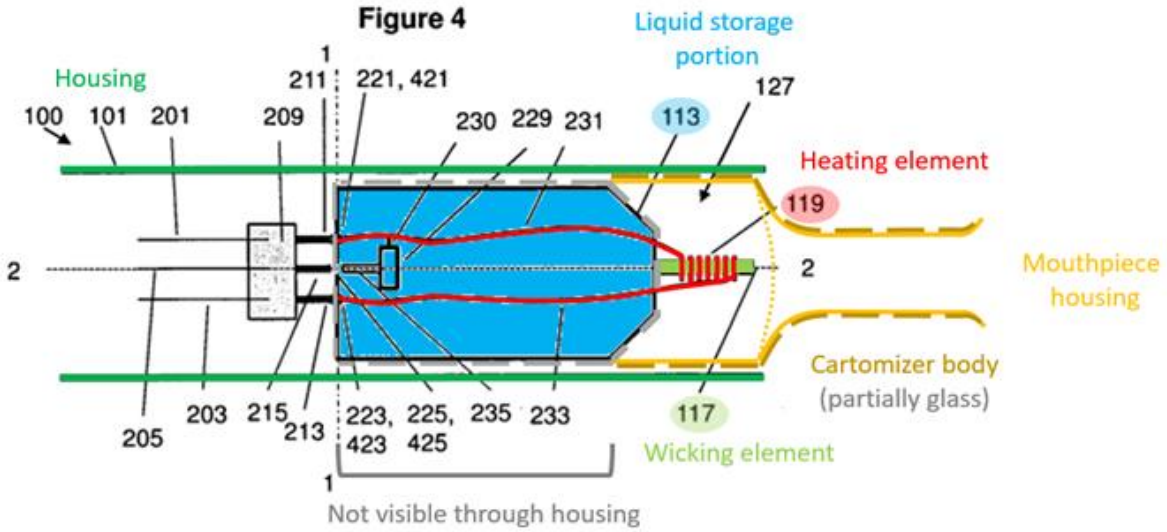

538. As I discussed above, Tucker teaches providing a window to view the amount of remaining liquid in the cartomizer. *See* Section IX.D.1.a. I note that Tucker's window meets the construction of "window" under the parties' agreed-upon construction. *See* Section IX.D.1.a; EX1049.004.

539. It is my opinion that a POSA would have been motivated to modify Thorens788's housing 101 such that a consumer could see through the housing and into the glass cartomizer in the manner illustrate below. A POSA would have been

NJOY Exhibit 1005.281

motivated to do so and would have had a reasonable expectation of success for the same reasons I discussed above in Section IX.D.1.a.

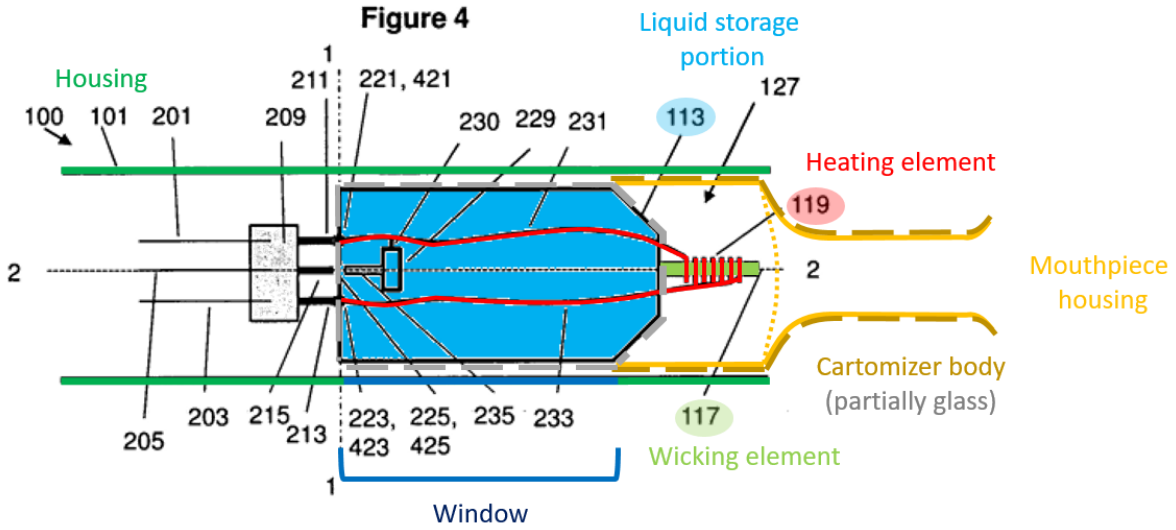

2. Claim 9

a. <u>[9.A] A vaporizer device comprising:</u>

540. *See* Ground 4, limitation [1.A].

b. <u>[9.B] a cartomizer comprising,</u>

541. *See* Ground 4, limitation [1.C].

c. <u>[9.C] a cartomizer body configured to hold a fluid vaporizable substance,</u>

542. *See* Ground 4, limitation [1.D].

d. <u>[9.D] wherein at least a portion of the cartomizer body comprises a translucent material configured to allow viewing of the fluid vaporizable substance;</u>

543. *See* Ground 4, limitation [1.E].

NJOY Exhibit 1005.282

e. <u>[9.E] a heating element and a wicking element within the cartomizer body; and</u>

544. *See* Ground 4, limitation [1.G].

f. <u>[9.F] a plurality of cartomizer electrical contacts on an exterior of the insertion end; and</u>

545. *See* Ground 4, limitation [1.J].

g. <u>[9.G] a battery portion, the battery portion having a first end and a second end and comprising:</u>

546. It is my opinion that Thorens788 discloses this limitation.

547. Thorens788 discloses that the aerosol generating system 100 comprises a mouthpiece end 103 and a body end 105. EX1004, 12:8-10. As shown below, Thorens788 discloses that the aerosol generating system 100 has a first end (body end) and a second end (mouthpiece end).

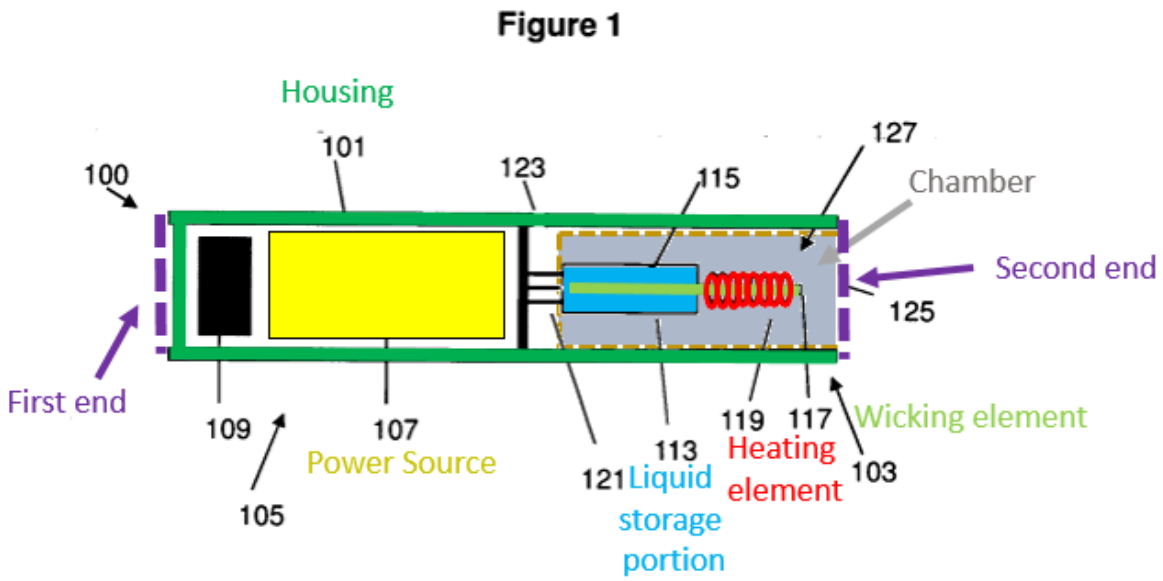

EX1004, Fig. 1

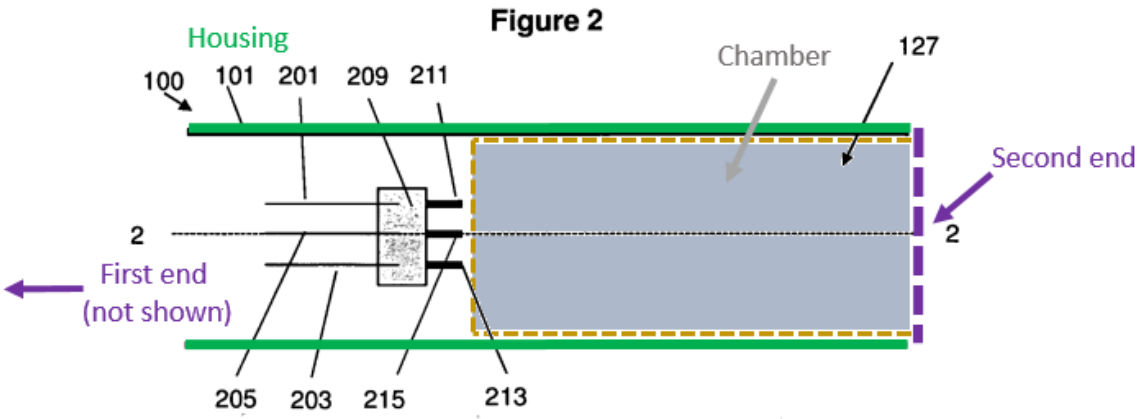

EX1004, Fig. 2

h. <u>[9.H] a battery housing segment proximate the first end of the battery portion; and</u>

548. It is my opinion that Thorens788 discloses this limitation.

549. Thorens788 discloses that the aerosol generating system 100 comprises a body end 105, in which "there is provided an electric power supply in the form of a battery 107." EX1004, 12:10-11. The part of the battery portion that contains the battery is the "battery housing segment" and is proximate the first end (body end 105) of the battery portion.

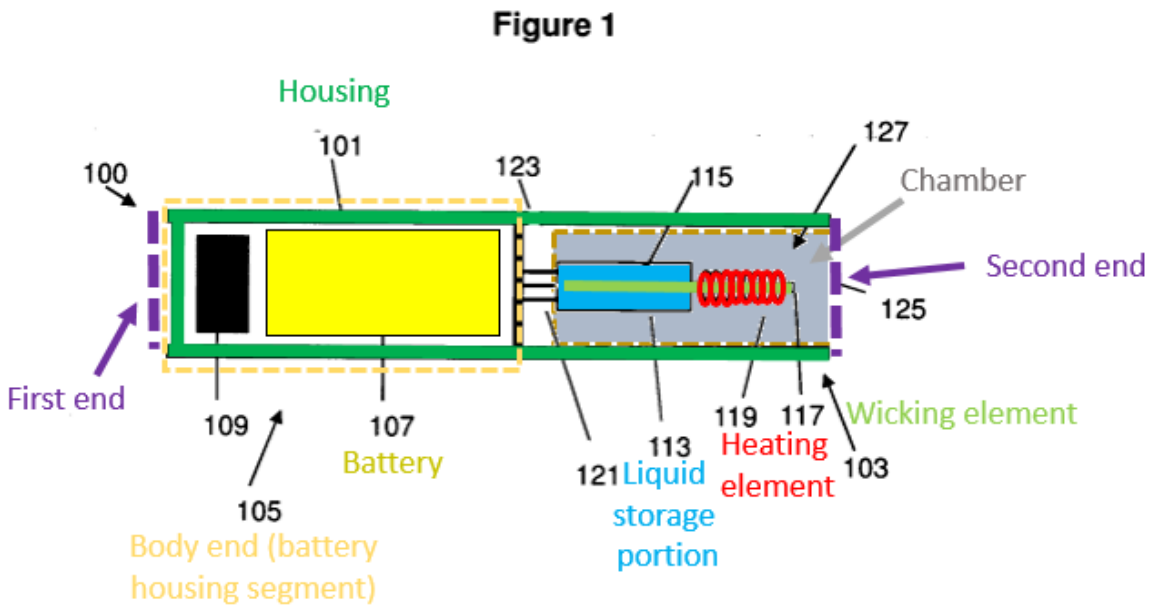

EX1004, Fig. 1

i. <u>[9.I] a cartomizer receiving segment proximate the second end of the battery portion,</u>

550. It is my opinion that Thorens788 discloses this limitation.

551. Thorens788 discloses that the aerosol generating system 100 has a mouthpiece end for receiving a cartomizer. EX1004, 3:7-8 ("Preferably, the [aerosol generating] system comprises a housing for at least partially receiving the liquid storage portion."), 12:12-13 ("In the mouthpiece end 103, there is provided a liquid storage portion or cartridge 113 containing liquid 115, a capillary wick 117 and a heating element in the form of a heating coil 119.").

552. Thorens788 also discloses that liquid storage portion 113 is removed by being pulled out of the housing and inserted by being pushed into the housing. EX1004, 15:27-30 ("When the liquid storage portion 113 is removed from the

aerosol generating system 100, for example by pulling the liquid storage portion 113 and housing 101 in substantially opposite directions such that the liquid storage portion 113 moves away from the aerosol generating system 100[.]").

553. As shown in Figure 4, the liquid storage portion is received by the chamber 127. Thus, the portion of the aerosol generating system that includes the chamber 127 is the recited cartomizer receiving system. As shown below, the cartomizer receiving segment is proximate the second end of the battery portion.

Figure 1

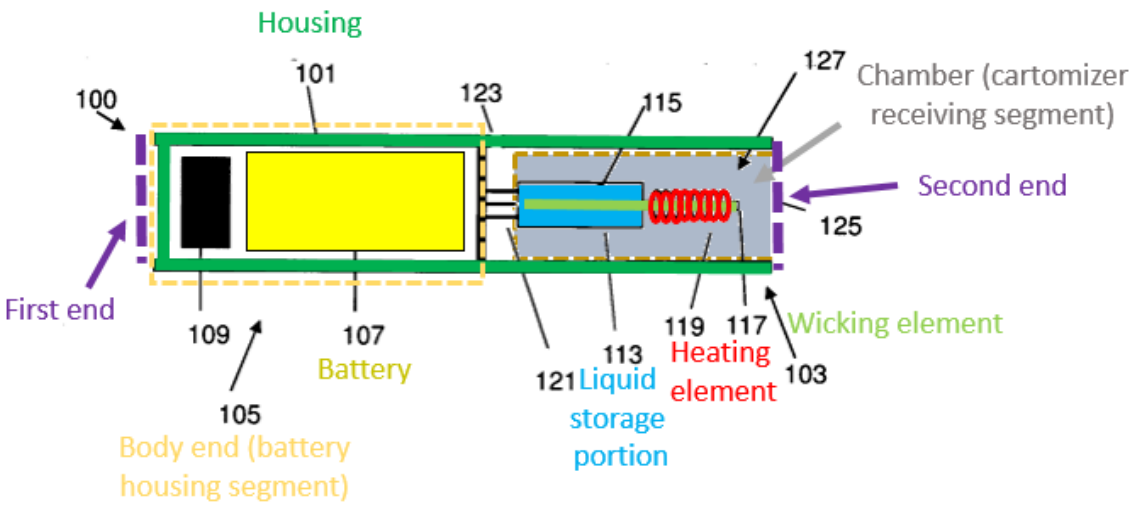

Figure 2

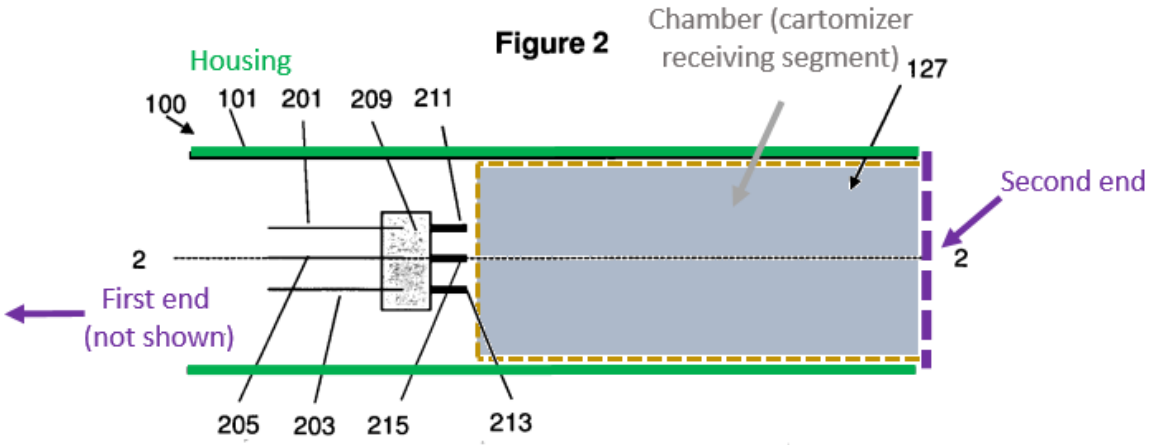

NJOY Exhibit 1005.286

EX1004, Figs. 1-2

j. <u>[9.J] the cartomizer receiving segment comprising a chamber defined by an outer shell of the battery portion,</u>

554. *See* Ground 4, limitation [1.B] and Ground 6, limitation [9.I].

k. <u>[9.K] wherein a window is provided in the outer shell, and wherein the translucent portion of the cartomizer body aligns with the window when the cartomizer body is inserted into the chamber.</u>

555. It is my opinion that Thorens788 and Thorens231 further in view of Tucker render obvious this limitation.

556. Thorens788 in view of Thorens231 discloses that a cartomizer made of glass and may be translucent. *See* limitation [1.E]. As I explained above in Section IX.H.1.a, a POSA would have found it obvious to include a window in Thorens788 to permit viewing of the liquid inside the cartomizer in view of Tucker's teaching.

3. Claim 10: The vaporizer device of claim 9, wherein outer shell is commonly shared by the battery housing segment and the cartomizer receiving segment.

557. It is my opinion that Thorens788 discloses this limitation.

558. Thorens788 discloses that the aerosol generating system 100 comprises a housing 101 that extends to encompass both a battery segment and a cartomizer receiving segment. As depicted in the figure below, housing 101 is a continuous outer shell. *See also* EX1004, 12:8-13 ("The aerosol generating system 100 of Figure 1 is an electrically heated aerosol generating system 100 and comprises a housing

NJOY Exhibit 1005.287

101 having a mouthpiece end 103 and a body end 105. In the body end 105, there is provided an electric power supply in the form of a battery 107 and electric circuitry in the form of circuitry 109 and a puff detection system, not shown. In the mouthpiece end 103, there is provided a liquid storage portion or cartridge 113 containing liquid 115, a capillary wick 117 and a heating element in the form of a heating coil 119.”).

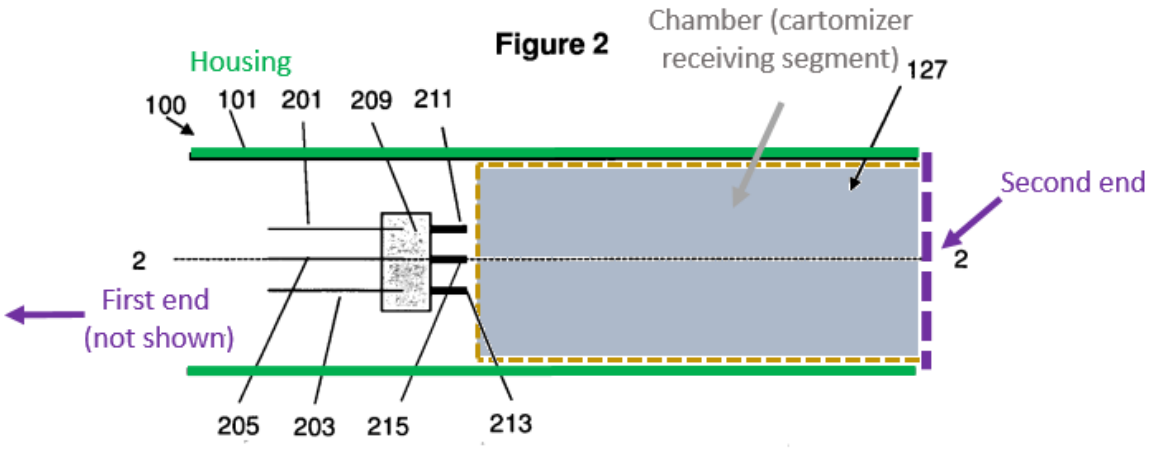

EX1004, Fig. 2

559. I note that Thorens231 likewise depicts a continuous outer shell.

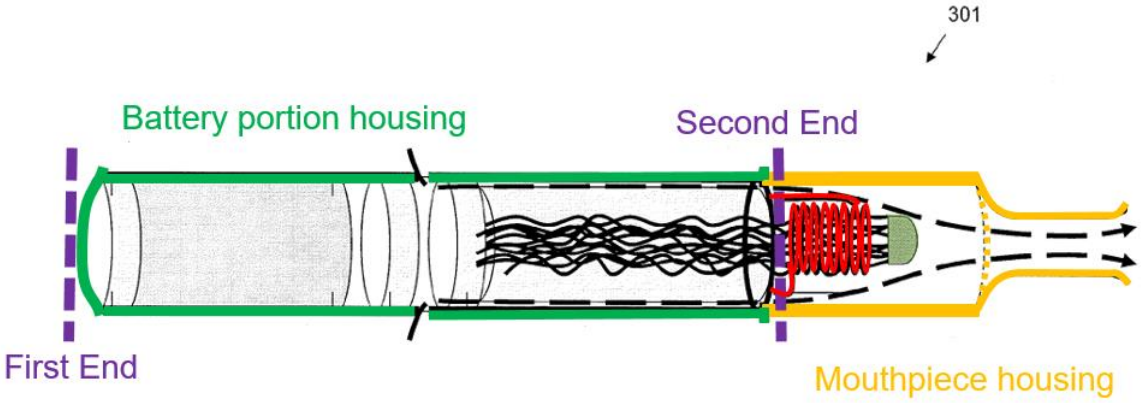

EX1002, Fig. 3

NJOY Exhibit 1005.288

4. Claim 11: The vaporizer device of claim 9, further comprising a rechargeable battery in the battery housing segment.

560. It is my opinion that Thorens788 discloses claim 11.

561. As I explained above with respect to claim limitation [9.H], Thorens discloses a battery housing segment that contains a battery. Thorens discloses that its device may be powered by rechargeable batteries. EX1004, 9:28-33 ("In that case, preferably, the electrically heated smoking system is usable by a smoker until the energy in the power cell is used up. Alternatively, the electric power supply may comprise circuitry chargeable by an external charging portion. In that case, preferably the circuitry, when charged, provides power for a pre-determined number of puffs, after which the circuitry must be reconnected to the external charging portion. An example of suitable circuitry is one or more capacitors or rechargeable batteries."). Therefore, Thorens discloses a rechargeable battery in the battery housing segment.

5. Claim 17

a. [17.A] A vaporizer device comprising:

562. *See* Ground 5, limitation [1.A].

b. [17.B] a cartomizer comprising:

563. *See* Ground 5, limitation [1.B].

NJOY Exhibit 1005.289

c. **[17.C] a cartomizer body configured to hold a vaporizable substance, wherein the vaporizable substance is in a fluid state,**

564. *See* Ground 5, limitation [1.D].

d. **[17.D] wherein the cartomizer body is configured for insertion into a chamber defined by an outer shell of a battery portion of a vaporizer device,**

565. *See* Ground 5, limitation [1.B], Ground 6, limitation [1.F].

e. **[17.E] a heating element within the cartomizer body,**

566. *See* Ground 5, limitation [1.G].

f. **[17.F] cartomizer electrical contacts operable to direct current to the heating element, and**

567. *See* Ground 5, limitation [13.H].

g. **[17.G] a mouthpiece at or proximate to the mouthpiece end, the mouthpiece in fluid communication with the inhalation tube; and**

568. *See* Ground 5, limitation [1.I].

h. **[17.H] a battery portion, the battery portion having a first end and a second end, the battery portion comprising:**

569. *See* limitation [9.G].

i. **[17.I] a chamber of a cartomizer receiving segment, the chamber configured for receiving the cartomizer body, the cartomizer electrical contacts, and the heating element through an opening at a distal insertion end of the battery portion,**

570. It is my opinion that Thorens788 discloses this limitation.

NJOY Exhibit 1005.290

571. As I explained above, Thorens788 discloses a cartomizer receiving segment defining a chamber. [9.I], [9.J]. The chamber is configured to receive the cartomizer. [Ground 3, 1.C, 1.F]. The cartomizer has a cartomizer body, cartomizer contacts, and heating element. [Ground 3, 1.D, 1.G, 1.J, 1.K].

572. As shown below, when the chamber receives the cartomizer body, the cartomizer electrical contacts and the heating element are received through an opening at the battery portion distal insertion end.

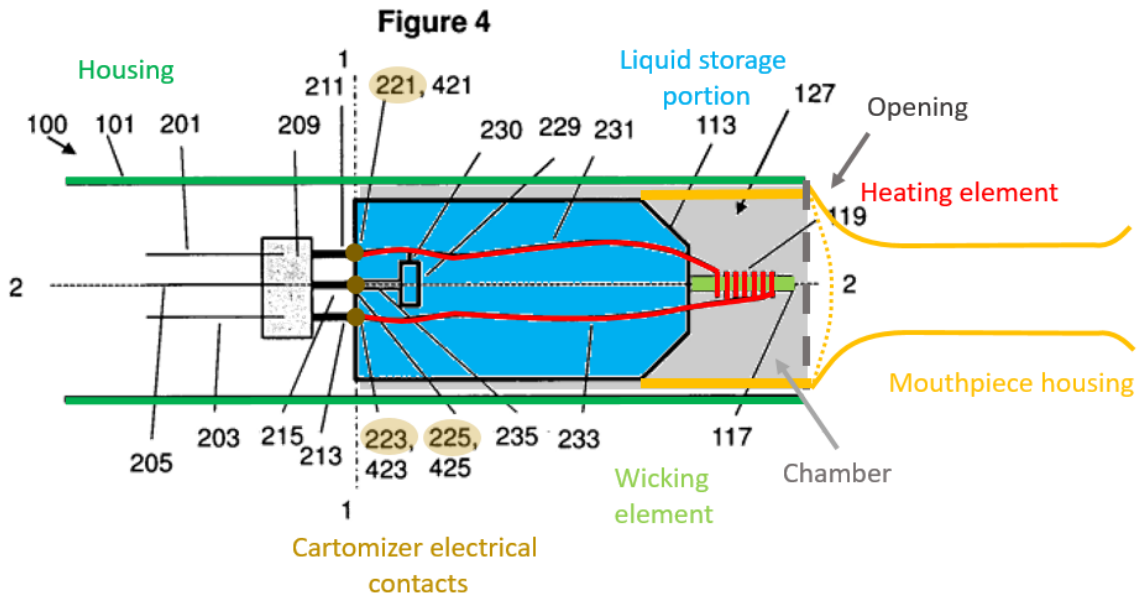

j. **<u>[17.J] a battery segment disposed between the cartomizer receiving segment and a battery end of the battery portion opposite from the distal insertion end of the battery portion, the battery segment comprising a battery,</u>**

573. It is my opinion that Thorens788 discloses this limitation.

NJOY Exhibit 1005.291

574. As shown below, Thorens788 discloses that the battery of its aerosol generating system 100 is disposed between the chamber 127 ("cartomizer receiving segment" and a battery end. The battery end is opposite from the distal insertion end. The portion of the aerosol generating system that houses the battery is the recited battery segment.

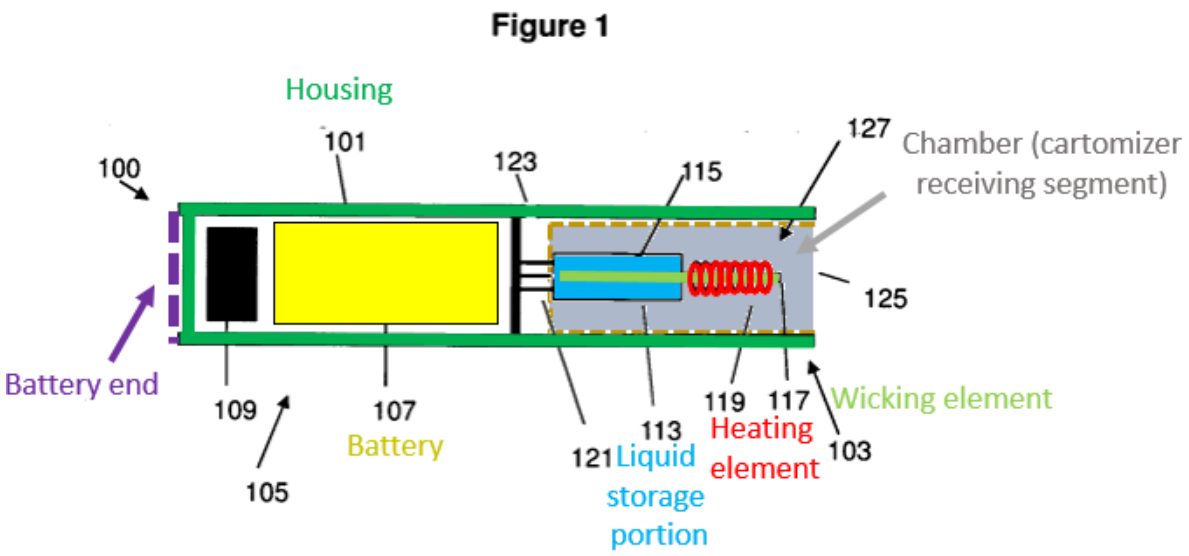

575. The battery end is opposite from the distal insertion end of the inhalation device. *See* [17.I].

k. <u>[17.K] battery electrical contacts for completing a circuit with the cartomizer electrical contacts when the cartomizer electrical contacts are received into the chamber, the battery electrical contacts being coplanar, and</u>

576. It is my opinion that Thorens788 discloses this limitation.

577. Thorens788 discloses that, "[w]hen a liquid storage portion is inserted into the aerosol generating system, electrical contacts 221, 223 on the liquid storage portion and two electrical contacts 211, 213 on the aerosol generating system 100 allow electrical energy to be transmitted to the heating element 119." EX1004, 15:5-7; *see also id.*, 15:16-19 ("The electrical contacts 221 or 421, 223 or 423, 225 or 425, on the liquid storage portion 113 are arranged so that they contact corresponding electrical contacts 211, 213, 215, on the aerosol generating system 100 when the liquid storage portion 113 is inserted into the aerosol generating system 100."). The electrical contacts 211, 213, and 215 are the recited battery electrical contacts.

578. As shown in Figure 2, reproduced below, the battery contacts are coplanar to the base of the cartomizer receptacle. *See also* EX1004, 16:21-22 ("Therefore, the corresponding electrical contacts 211, 213, 215 on the aerosol generating system 100 are also arranged in a row or substantially straight line.").

NJOY Exhibit 1005.293

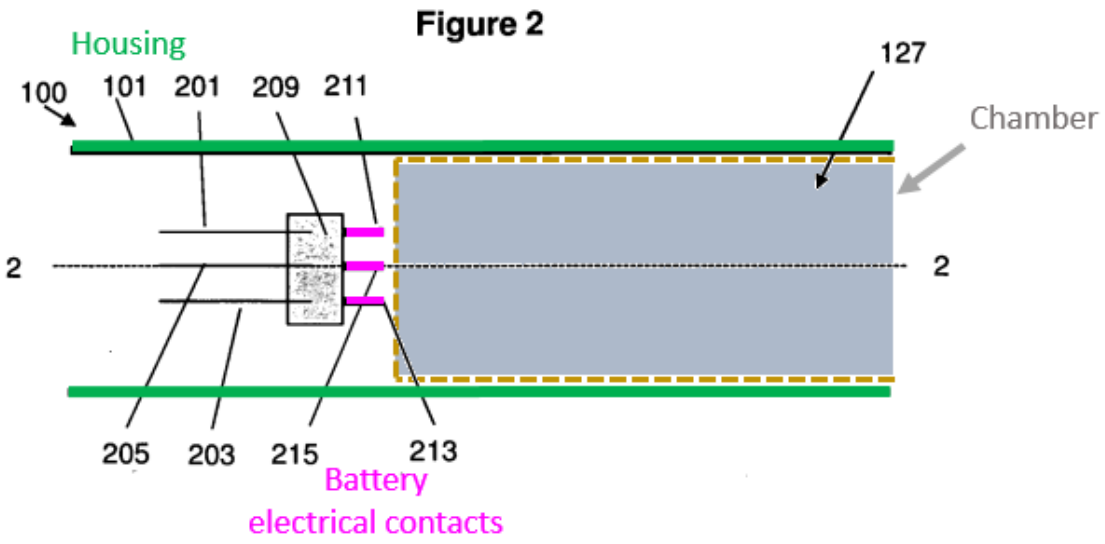

EX1004, Fig. 2

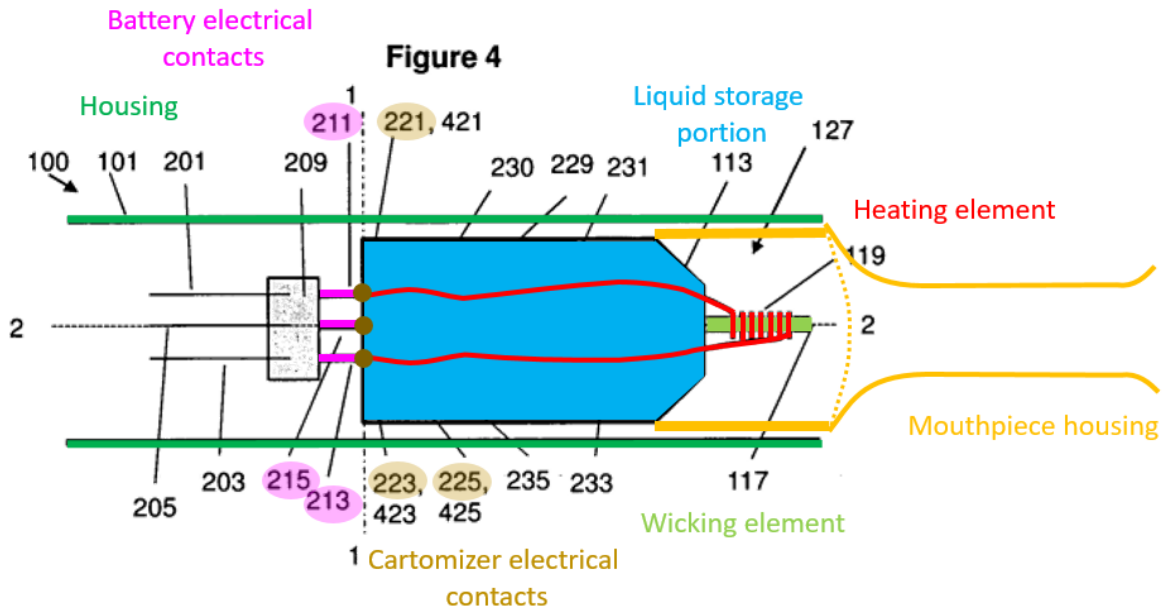

l. [17.L] an outer shell forming at least part of the chamber, wherein a window is formed in the outer shell to permit viewing of the cartomizer body when the cartomizer body is received into the chamber.

579. *See* limitation [9.K].

NJOY Exhibit 1005.294

6. Claim 18

a. [18.A] The vaporizer device of claim 9, wherein the cartomizer has a mouthpiece end and an insertion end disposed opposite the mouthpiece end, the cartomizer further comprises,

580. *See* Ground 4, limitation [1.C].

b. [18.B] an inhalation tube in fluid communication with the heating element and the wicking element; and

581. *See* Ground 4, limitation [1.H].

c. [18.C] a mouthpiece at or proximate to the mouthpiece end, the mouthpiece in fluid communication with the inhalation tube;

582. *See* Ground 4, limitation [1.I].

b. [18.D] wherein the plurality of cartomizer electrical contacts is positioned to contact a plurality of battery electrical contacts at a base end of the chamber when the cartomizer body is inserted into the chamber.

583. *See* Ground 4, limitation [1.K].

I. Ground 7: Thorens788 and Thorens231 further in view of Zheng

584. Claim 8 of the ’981 Patent is unpatentable under 35 U.S.C. § 103 on the ground that is rendered obvious by Thorens788 and Thorens231 further in view of Zheng.

1. Motivation to Combine

a. Compressible Electrical Contacts

585. Thorens788 discloses that its aerosol generating system comprises battery contacts 211, 213, and 215. *See* [Ground 6, 17.K], *supra*. Thorens788 does

NJOY Exhibit 1005.295

not disclose that the battery contacts are compressible.

586. However, Zheng, as discussed in Section IX.C.1, discloses compressible battery contacts which are "resilient battery columns" having "a spring 302 inside [a] hollow cavity." EX1050, 3:7-13. It is my opinion that a POSA would have been motivated to modify Thorens788 to include the push pin connectors of Zheng for substantially the same reasons as discussed in IX.C.1. For example, push pin connectors bias the battery portion connector towards the corresponding cartomizer connector, which ensures a stable electrical coupling even if the contacts wear from the repeated insertion of different cartomizers. Moreover, push pin connectors are self-cleaning, which facilitates a more stable electrical connection. Also, as discussed by Zheng, Zheng's push pin connectors are "simple" and "easy to manufacture," and would have been preferred by a POSA. EX1050, 1:58-61.

587. A POSA would have had a reasonable expectation of success in implementing Zheng's push pin connectors given its simple construction and the ubiquitousness of push pin connectors. It would have been a trivial task to modify Thorens788 to include Zheng's connection pins in the manner illustrate below.

NJOY Exhibit 1005.296

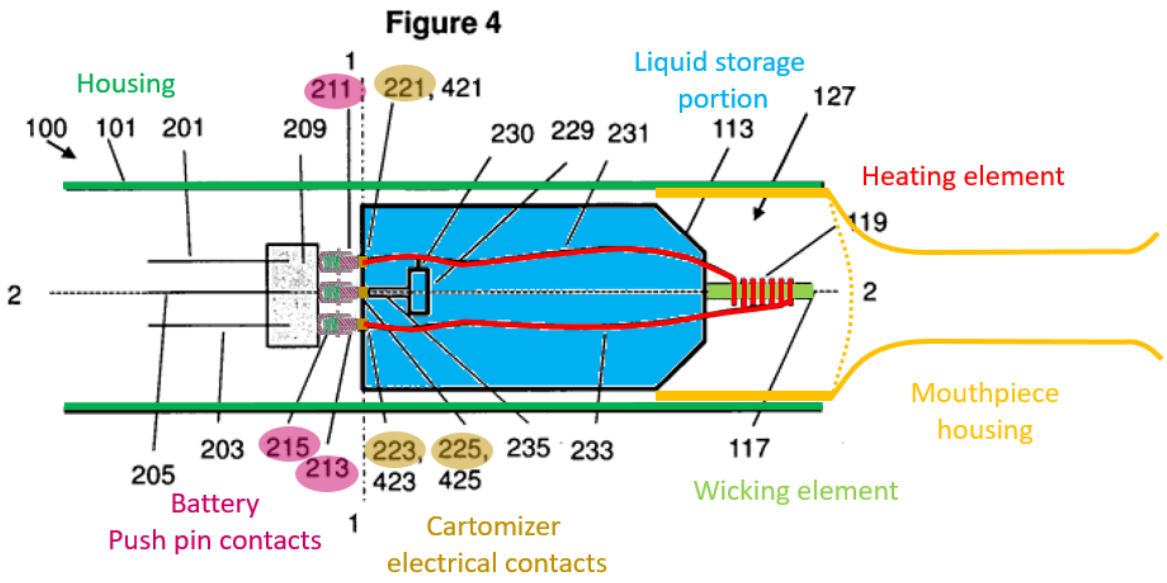

NJOY Exhibit 1005.297

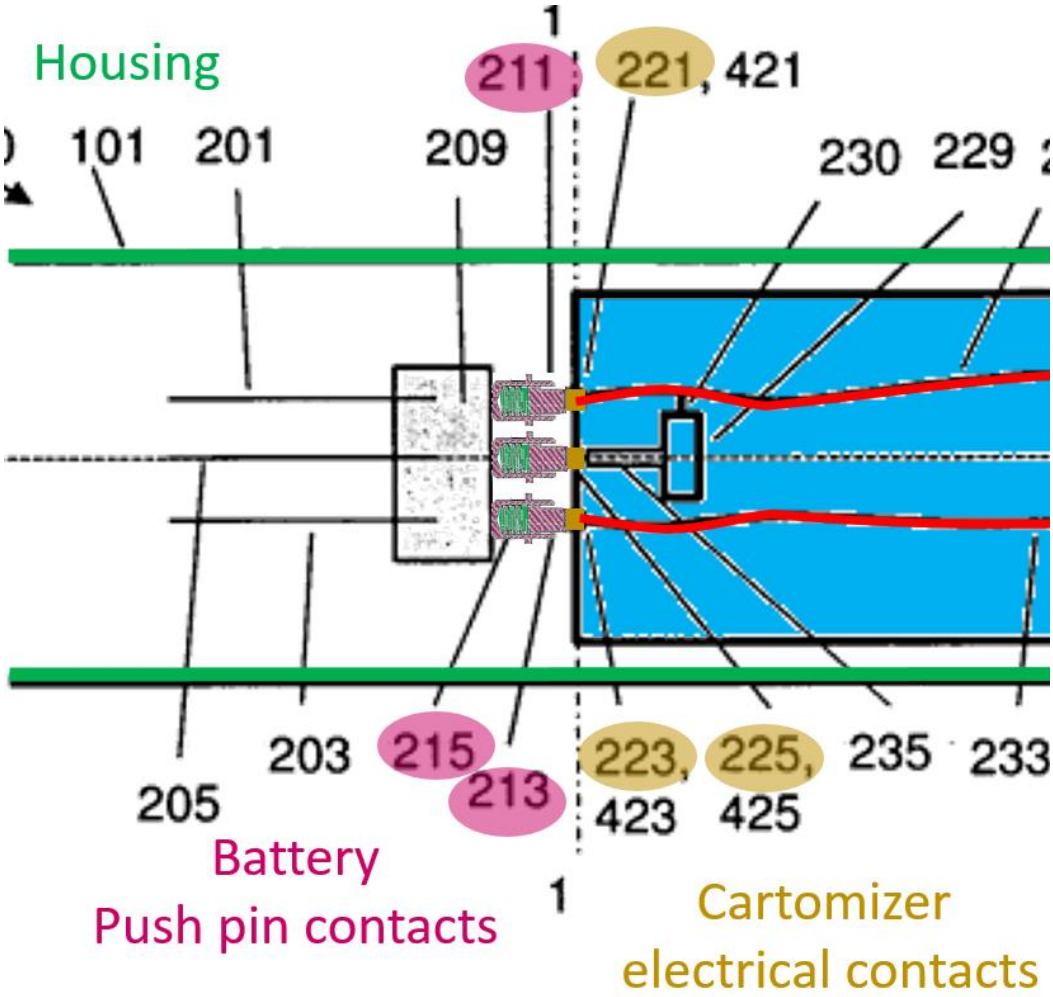

2. Claim 8: The cartomizer of claim 1, wherein the plurality of cartomizer electrical contacts is further configured to at least partially compress the plurality of battery electrical contacts when the cartomizer body is inserted into the chamber.

588. It is my opinion that Thorens788 and Thorens231 further in view Zheng render obvious this limitation.

589. As discussed in Section IX.I.1.a, it would have been obvious to a POSA to use push pin contacts, such as those disclosed in Zheng, for example as shown below.

NJOY Exhibit 1005.298

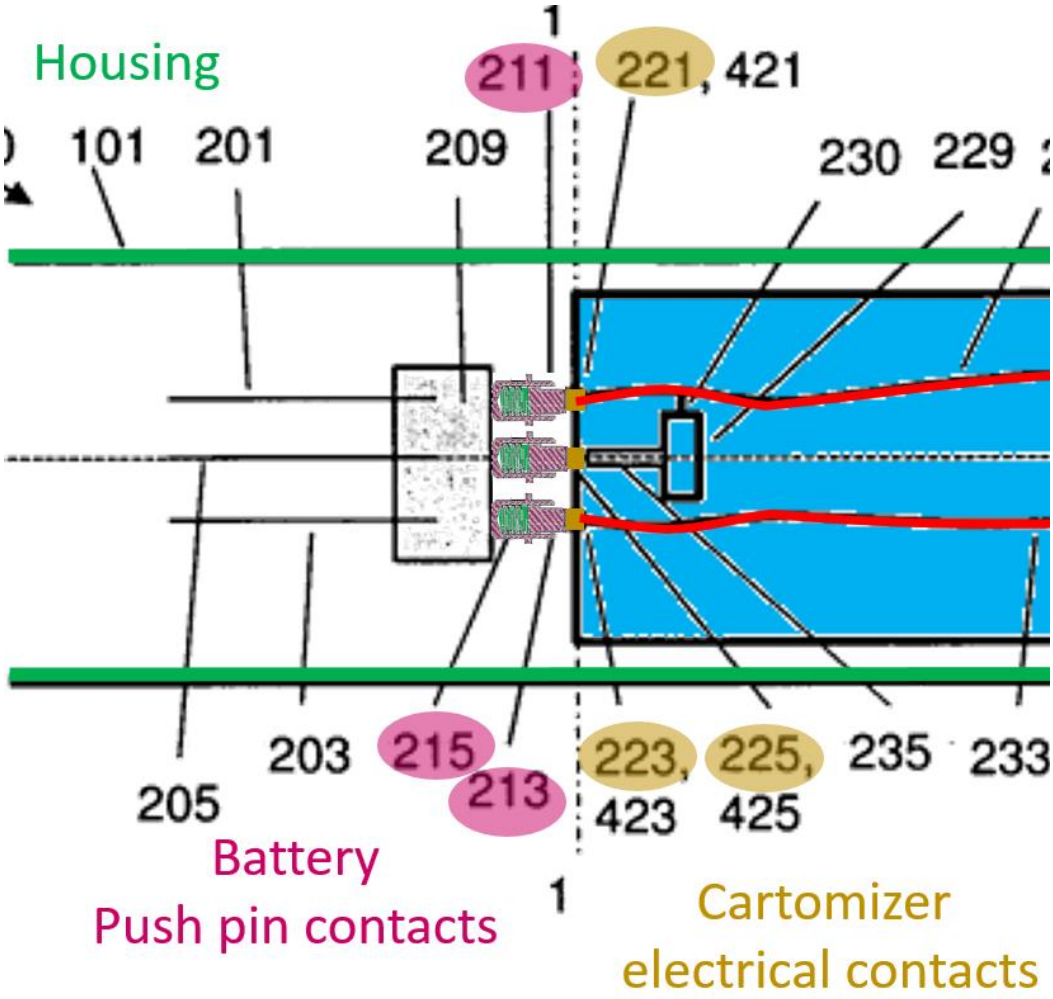

X. Secondary Considerations

590. I understand that in the related ITC investigation, Patent Owner presents alleged evidence of secondary indicia of nonobviousness, as set forth in its October 3, 2023 first supplemental response to Petitioner's Interrogatory No. 3. It is my understanding that in this response, Patent Owner made no attempt to establish

a nexus between the alleged evidence and the challenged claims.[4] Further, it is my opinion that Liu783, Liu438, Levin, Thorens788, Thorens231, Tucker, and Zheng demonstrate there was no long-felt but unsolved need or failure by others because the features recited in the challenged claims were readily available in the prior art. I am unaware of any evidence of secondary considerations that would support a nonobviousness finding.

XI. Declaration

591. I declare that all statements made herein of my own knowledge are true and that all statements made on information and belief are believed to be true; and further that these statements were made with the knowledge that willful false statements and the like so made are punishable by fine or imprisonment, or both, under Section 1001 of Title 18 of the United States Code.

Dated: December 5, 2023 By: _____

Jason Janet

[4] I have reviewed Patent Owner's Interrogatory Response regarding secondary consideration. I understand that the Interrogatory Response is marked confidential and has not been submitted as an exhibit in this IPR.

NJOY Exhibit 1005.300