United States Patent [19]

Waffner

[11] **4,253,597**

[45] **Mar. 3, 1981**

[54] **LOOSE LOOP FEED CONTROL APPARATUS**

[75] Inventor: **William D. Waffner**, East Aurora, N.Y.

[73] Assignee: **Moore Business Forms, Inc.**, Grand Island, N.Y.

[21] Appl. No.: **55,550**

[22] Filed: **Jul. 9, 1979**

[51] **Int. Cl.**[3] **B65H 23/18**

[52] **U.S. Cl.** **226/40**; 242/185

[58] **Field of Search** 226/40, 25, 38, 30, 226/41; 137/182; 242/75.3, 183, 185; 101/180

[56] **References Cited**

U.S. PATENT DOCUMENTS

2,897,754	8/1959	Spiller	101/180
3,138,168	6/1964	Waller	137/182
3,485,427	12/1969	Busker	226/25
3,561,654	2/1971	Greiner	226/25
4,025,026	5/1977	Merritt et al.	242/185

Primary Examiner—Leonard D. Christian

Attorney, Agent, or Firm—Allegretti, Newitt, Witcoff & McAndrews

[57] **ABSTRACT**

Apparatus for controlling the infeed speed of a web of material relative to the outfeed speed so that damage to the web will be minimized. The control apparatus senses the length of a loose loop formed by the web and includes a moving belt provided with perforations along its length and which is, in part, positioned between a vacuum chamber and the downwardly depending portion of the web loop. The downwardly descending portion of the web loop is held in contact with the adjacent surface of the perforated belt by a low level vacuum in the vacuum chamber and the position of the loop, with respect to the number of the holes in the belt covered by the downwardly descending portion of the loop, regulates the degree of vacuum in the vacuum chamber. As the loop lengthens, the vacuum increases in a vacuum chamber behind the belt, conversely, when the loop shortens, the vacuum in the chamber decreases. A signal corresponding to the vacuum in the vacuum chamber is communicated to a pressure transducer-amplifier. An output signal from the transducer-amplifier is used to control the operation of a ratio changing device which includes a variable pitch sheave and which changes the infeed speed of the web in accordance with the output signal. The use of the control apparatus permits the direction of the web to be changed through an angle of 180° and also permits the web to be inverted, without undue risk of damage to the web.

9 Claims, 5 Drawing Figures

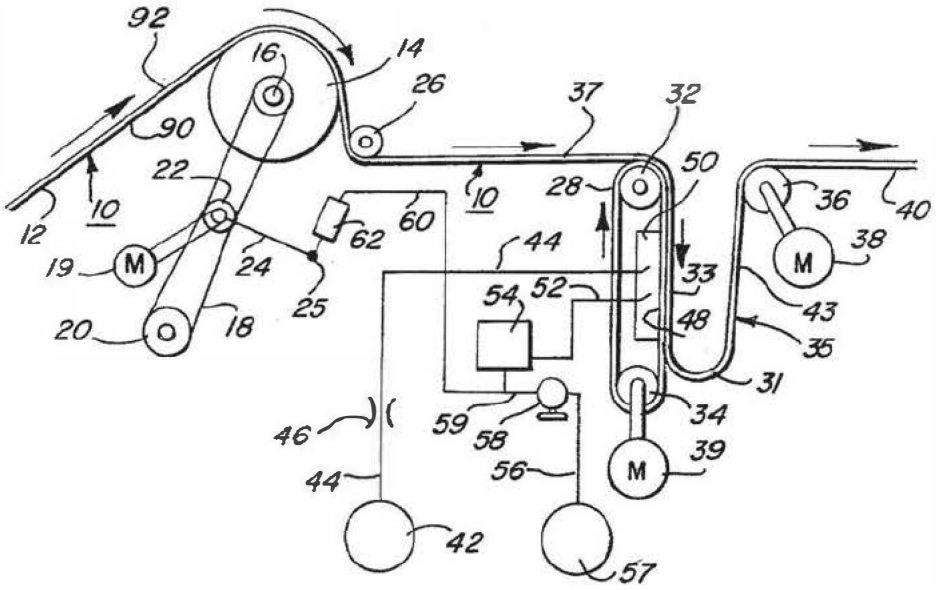

FIG. 1

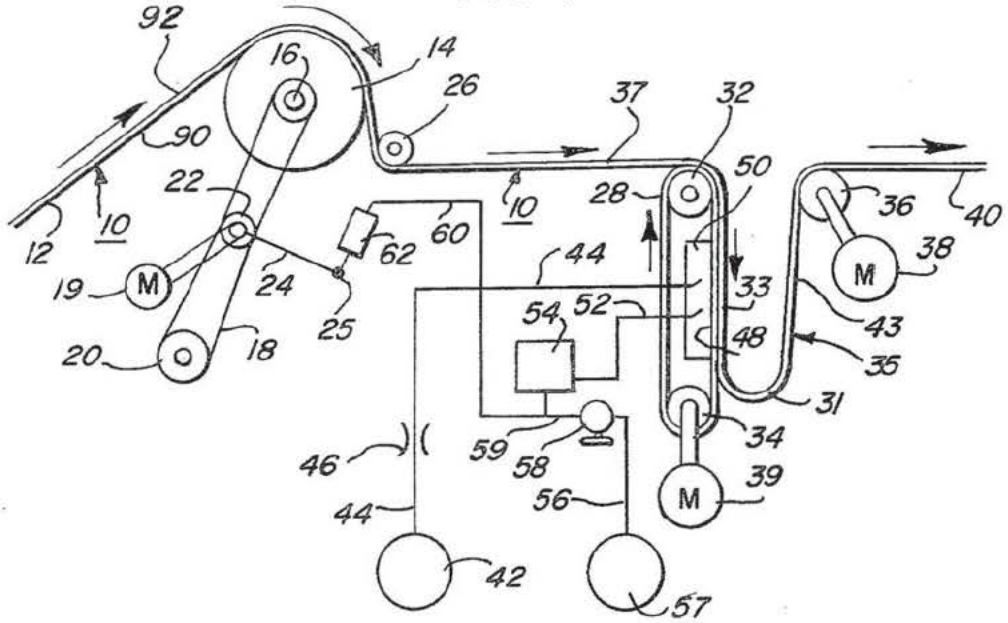
92
16
14
26
37
32
90
22
10
28
50
36
40
12
10
60
62
44
38
19
M
24
33
M
54
52
43
25
48
20
18
35
31
34
46
59
58
39
M
56
44
42
57

FIG. 2

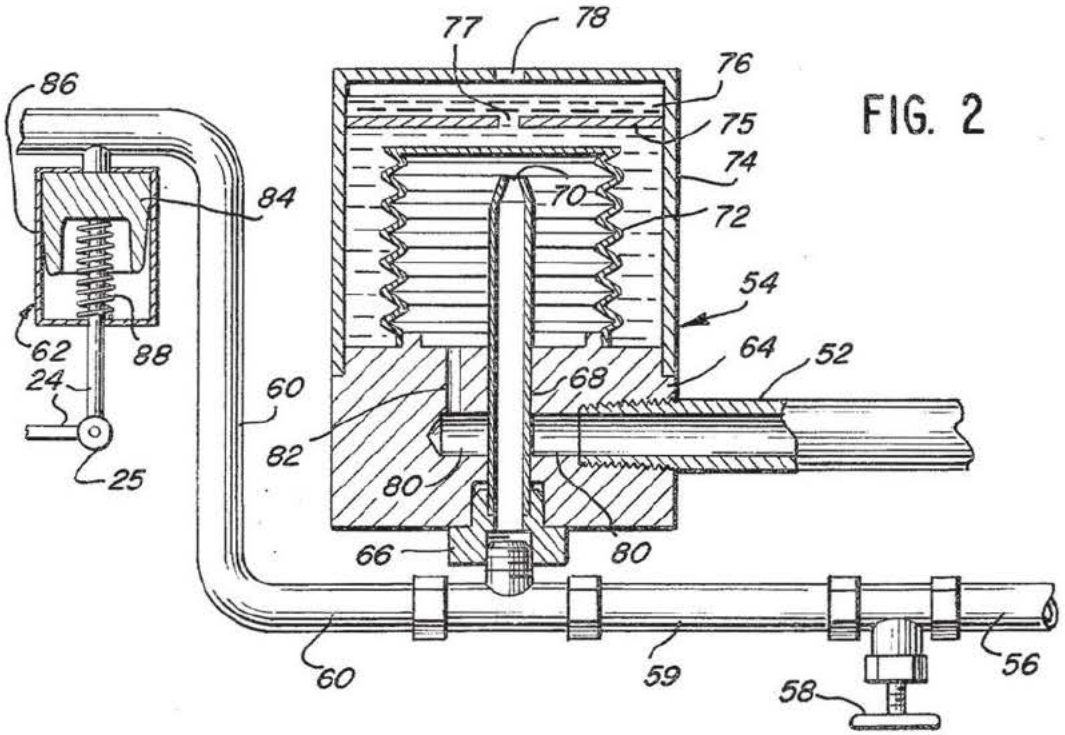
77
78
76
86
75
74
84
70
72
54
62
88
64
52
24
68
60
82
25
80
80
66
60
59
56
58

FIG. 3

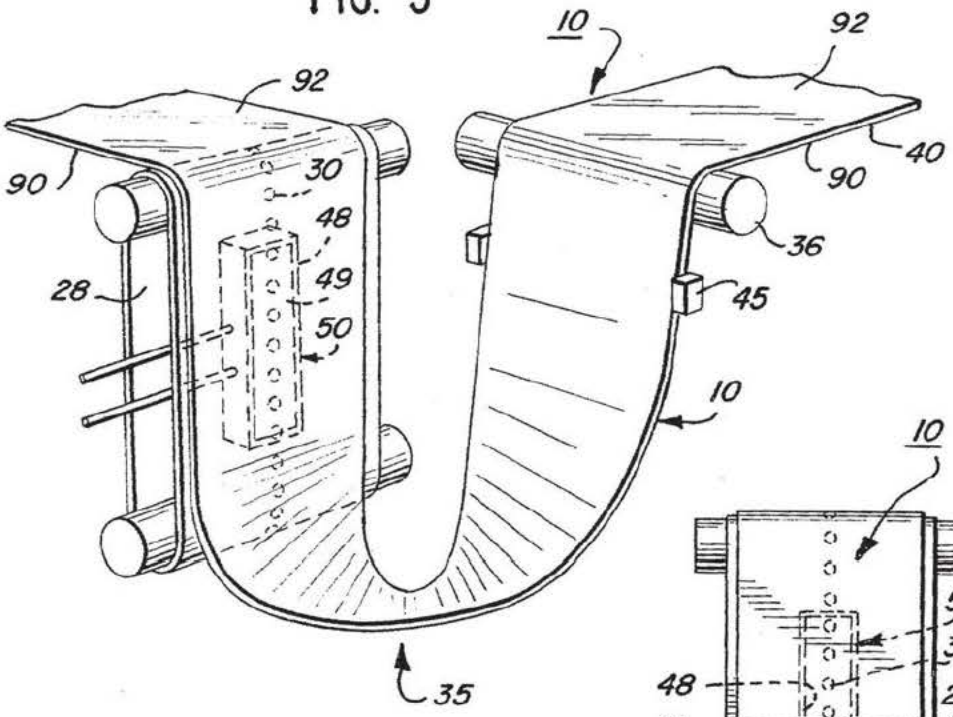

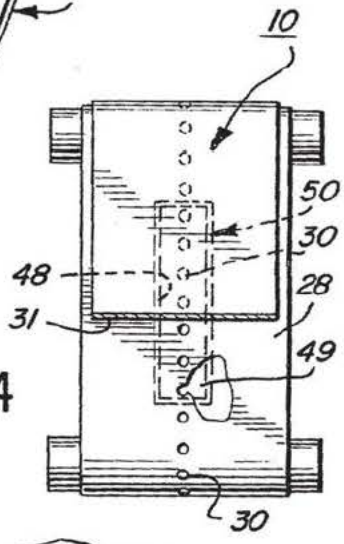

FIG. 4

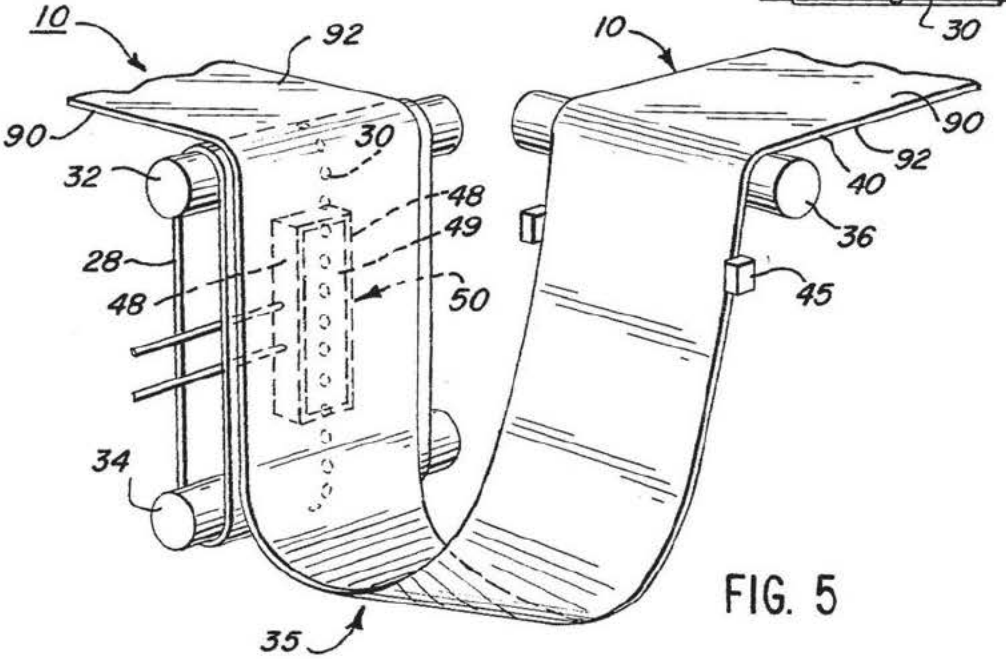

FIG. 5

LOOSE LOOP FEED CONTROL APPARATUS

BACKGROUND AND SUMMARY OF THE INVENTION

It has long been known that the feeding of web material, such as paper or other fragile sheeting, from an input to an output is best accomplished by permitting a loose loop to form in the web between the inlet and the outlet. With such a loop, the web will not be damaged if there are changes in the relative infeed and outfeed speeds of the web. However, if the infeed speed remains greater than the outfeed speed, the loop will continually grow in size. Conversely, if the infeed speed remains less than the outfeed speed, the loop will continually diminish in size, and this may result in the total disappearance of the loop.

Control over the infeed and outfeed speeds of the web in order to maintain a loose loop becomes particularly critical when the web is utilized in a system wherein the tension of the web must be kept uniform. For example in the printing industry, it is common for web-fed rotary printing presses to withdraw the web from a supply roll and draw the web through one or more printing units of the press. In a multiple inking process, the individual printing inks are applied to the web in succession and must therefore be accurately registered. To obtain accurate registration, the web must remain in constant tension while traveling along the length of the press. As is evident, non-uniform changes in the tension of the web during the printing process can directly effect the physical shape of the web, especially when using dampener-operated offset printing presses. Moreover, changes in the web tension can distort the intended printing operation by a printing unit if the change causes slippage between the impression cylinders. As a result, the correct registration of ink during the printing process can become very difficult or impossible.

Means to maintain a web with a desired loose web while operating under uniform tension has long been sought in the printing art, and many proposals have attempted to accomplish this. According to French Pat. No. 426,833, the tension of the web may be regulated by changes in the rotational speed of two rollers which withdraw the web from a supply roll. The changes in speed are controlled by the deflection of a pendulum roll which engages the web with a constant pressure. This simple and primitive method of web tension control can only eliminate disturbances caused by, and during the withdrawal of, the web from the supply roll.

Published German patent application No. 1,060,406 discloses a printing press in which pairs of power-driven conveyor rollers are positioned in front of and behind the printing unit or units of the press. The rotational speed of each pair of rollers is manually and independently adjustable. This German application also refers to means for measuring and controlling the web tension but does not further describe such means. In effect, the press arrangement described in the German application subdivides the web into several aligned but mutually separate portions which are adjusted independently of each other. As a result, there is no assurance that the tension of the web is stable and constant across the entire length of the web passing through the press. Moreover, if the web is to be printed on both sides, it is not possible to provide tension probing devices at various points along the length of the web passing through the press; such devices would smear the freshly printed ink.

U.S. Pat. No. 2,897,754 discloses a device in which the withdrawal speed of the web is controlled by a friction belt drive acting upon the circumference of the web supply roll. The speed of the belt drive is controlled by the interposition of a finely adjustable variable speed gearing, which is controlled by the displacement of a tension roller placed behind the supply roll, acting upon the web as it is withdrawn from the roll. The device also incorporates suitably connected, finely adjustable variable speed gearings which allow for variations in the rotational speeds of pairs of conveyor rollers positioned ahead of the printing units and behind the drying units. The patent is silent as to the factors to be taken into account in determining the rotation speeds of the conveyor rollers placed behind the printing units. There are also no provision for comparing the rotational speed of the conveyor rollers behind the printing units with the rotational speed of the conveyor rollers in front of the printing units, and hence adjustment on the basis of such comparison is not possible.

U.S. Pat. No. 3,561,654 discloses a device for maintaining constant tension in a web of paper being withdrawn from a supply roll and conveyed through one or more printing units of a printing press. The device consists of two pairs of power-driven rollers, one placed in front and the other in back of the printing unit or units, a means for visually measuring digitally indicated speed differentials between the two pairs of rollers, and a potentiometer controlled means for adjusting the speed of the rollers to the desired value. The system is expensive to install and does not react quickly enough for use in modern high-speed printing press operations.

U.S. Pat. No. 3,485,427 discloses a tension controlling device. A complicated electronic circuit is relied upon to control the tension of a web.

U.S. Pat. No. 3,138,168 discloses a reverse acting, pneumatic amplifier which is generally structurally similar to the transducer-amplifier utilized in the loose loop feed control apparatus of the present invention. However, the apparent novel feature of this patented amplifier resides in the use of a single diaphram and an integral flapper combination as the only active element of the amplifier. This patent does not disclose nor teach the use of the patented amplifier in a loose loop feed control apparatus.

In the past, it was also known to use devices to control web tension between pairs of rollers by means of electrical pulses generated as a function of the rotational speeds of the rollers. The pulses are counted by a suitable counter and digitally totaled per unit of time. The totals obtained are used to measure rotation ratios and slippage. The relative rotational speeds of the roller pairs are then adjusted either by automatic or manual controls.

It is an object of the present invention to provide an improved apparatus which is utilized to control the infeed speed of a continuous web so that a loose loop is formed and maintained in the web so as to substantially eliminate damage to the web.

Another object of the present invention to provide an improved loose loop feed control apparatus wherein a vacuum signal, which varies as the length of the descending portion of the web loop increases or decreases, operates, through a transducer-amplifier, a ratio changing device, such as a variable pitch sheave, to automati-

cally change the web's infeed speed to match the web's outfeed speed, without the necessity of manually adjusting the speeds or providing complicated electronic means to do so.

A still further object of the present invention is to provide an improved loose loop feed control apparatus of the type described wherein because of the usage of the apparatus, the direction of the web may be changed through a substantial angle, for example, 90° or even 180° degrees, and wherein the web can be turned upside down, i.e., the top and bottom sides or surfaces of the web can be reversed, without substantial risk of damage to the web.

DESCRIPTION OF THE DRAWINGS

FIG. **1** is a schematic view of the improved apparatus of the present invention;

FIG. **2** is an enlarged sectional view of the transducer-amplifier used as a component in the loose loop feed control apparatus of the present invention;

FIG. **3** is a perspective view of the loop of web material, with its associated vacuum chamber and perforated belt, illustrating a 90° turn in the web adjacent to the outfeed side of the loop;

FIG. **4** is a partial, front elevational view of the perforated belt and vacuum chamber showing the descending portion of the web blocking some of the perforations in the belt; and

FIG. **5** is a view similar to FIG. **3** wherein the web is not only turned 90°, adjacent to its outfeed side, but is also reversed with respect to the side of the web which is uppermost.

DESCRIPTION OF THE PREFERRED EMBODIMENT

As noted above, the preferred embodiment of the loose loop feed control apparatus of the present invention is shown schematically in FIG. **1** and is utilized to control the feeding of a web **10** to a desired destination, not shown, such as, for example, a printing press, wherein it is exceedingly important to maintain a uniform rate of web feed to the printing press rollers in order to obtain correct registration of inks. The web **10** is made of paper although it could, of course, be made of other materials.

Initially, as indicated by the portion **12**, the web **10** is drawn from a conventional supply roll, not shown. The web infeed speed is regulated by a variable speed feed roll **14**. A pulley **16** is mounted on the roll **14** and is driven by an endless belt **18** which is, in turn, driven by a pulley **20** connected to a constant speed motor **19**. The speed of the rotation of the pulley **16**, and thus the feed roll **14**, is varied by a conventional variable pitch sheave **22**, known in the art as a "Varisheave", which is operated and controlled, in a conventional manner, by a pair of rods **24**. An air pressure controlled means, hereinafter described, pivots the rods **24** about a pivot **25**, and the position of the rods **24** controls the sheave **22**. The portion **37** of the web **10**, downstream from the feed roll **14**, passes under an idler roll **26** and over an endless belt **28** which is driven around pulleys **32** and **34**. The belt **28** includes a plurality of evenly spaced, uniform diameter apertures **30** disposed along its longitudinal center-line, as best shown in FIGS. **3–5**. A constant speed motor **39** connected with the pulley **34**, is used to drive the belt **28** at a constant speed.

The infeed and outfeed speeds of the web **10** are initially set so that a loop, generally indicated at **35**, is formed in the web **10**. The loop **35** is defined by a descending portion **33**, by an ascending portion **43** and by a downwardly formed portion **31** interconnecting the bottom of the portions **33** and **43**. The portion **40** of the web **10**, downstream from the loop **35**, is carried by and passes over an outfeed roll **36**, driven by a constant speed motor **38**, to a destination which as noted above, may be a printing press such as a four color printing press.

A source of vacuum, diagrammatically shown at **42** in FIG. **1**, is preferably of the conventional blower type and is connected, through a vacuum line **44**, to a vacuum chamber **50** disposed adjacent to a portion **95** of the belt **28** and between the pulleys **32** and **34**. A vacuum restriction valve **46** is disposed in the line **44**. The vacuum chamber **50** is provided with longitudinal edges **48** which define a longitudinal extending opening **49** therein facing the portion **95** of the belt **28**. The chamber **50** is constructed so that the portion **95** of the belt **28** is maintained in tight contact with the edges **48** by the vacuum in chamber **50**.

A vacuum line **52** connects the vacuum chamber **50** with a transducer-amplifier **54**. The amount of vacuum existing in line **52** will be determined by the vacuum present in the vacuum chamber **50**, which vacuum is varied in a manner hereinafter described.

A conventional air compressor, shown diagrammatically at **57**, supplies compressed air to a transducer-amplifier **54** through a conduit **56**, a calibrated air pressure valve **58**, and another conduit **59**. More specifically one end of the conduit **59** is connected to the valve **58** and its other end is connected to the lower end of a tube **68** by means of a fitting **66** in the base **64** of the transducer-amplifier **54**. The tube **68** is disposed within the transducer-amplifier **54** and has a relatively small control bleed orifice **70**, e.g., on the order of 0.025 inches, in its other, upper end. An expandable bellows **72** is secured to the base **64** of the transducer-amplifier about the tube **68** and is moved longitudinally by changes in vacuum/-pressure acting on its walls. The exterior portion of the walls of the bellows **72** is subjected to the atmospheric pressure of the fluid **76** contained in the exterior casing **74** of the transducer-amplifier **54**. The casing **74** also contains an orifice plate **75** having an opening **77** which damps the motion of the fluid **74**. Since the casing **74** has an opening **78** in its upper end, atmospheric pressure will act on the fluid **76**, and thus the exterior of the bellows **72**.

The vacuum line **52** is connected to a bore **80** in the base **64** of the transducer-amplifier **54**. The bore **80** communicates with a passage **82** in the base **64**. The passage **82**, in turn, communicates with the interior of the bellows **72**.

As best shown in FIGS. **1** and **2**, a conduit **60** interconnects the other end of the conduit **59** and a "Bellofram" type cylinder **62** so that compressed air in the conduits **59** and **60** can communicate with the cylinder **62**. More specifically, the cylinder **62** includes a cylinder casing **86** and a piston slidably mounted therein so that one face of the piston **86** is in communication with the compressed air in conduit **60**. Depending upon the pressure of the compressed air in the conduit **60**, the piston **84** may be moved in the cylinder casing **86** against the force of a coil compression spring **88** which extends between the other face of the piston **84** and the adjacent end of the casing **86**. The piston **84** is connected to the operating rods **24**, through the pivot **25**, so that movement of the piston **84** moves the rods **24**. As

noted above, movement of the rods **24** causes them to change the pitch of the "Verisheave" sheave **22**, and hence, the speed of rotation of the pulley **16**, which drives the roll **14**, may be varied in response to the position of the piston **84**.

OPERATION

The loose loop feed control apparatus is generally arranged and the web is started on its course as described above and as shown in FIG. **1**. Because the belt **28** passes over the opening **49** in the vacuum chamber **50** and is maintained in a tight, sealing relationship with the edges **48** of the vacuum chamber **50**, the degree of vacuum in the chamber **50** will depend upon the number of apertures **30** in the belt **28** which are covered by the downwardly descending portion **33** of the loop **35** of the web **10**. If the outfeed speed of the web **10** decreases, relative to its infeed speed, the loop **35** is lengthened so that more of the apertures **30** in the belt **28** are covered by the web. When all of the apertures **30** are covered by the portion **33** of the loop **35** of the web **10**, such as, for example, shown in FIG. **3**, the vacuum in the chamber **50** will be relatively high because there is very little leakage of atmospheric air into the chamber **50**. However, if the outspeed of the outgoing portion **40** of the web **10** becomes greater than the inspeed of the portions **12** of the web, the loop **35** will shorten. Consequently and as shown in FIG. **4**, some of the apertures **30** in the belt **28** will become uncovered to the atmosphere. This permits more air, at atmospheric pressure, to enter the chamber **50**, and thus decreases the vacuum in the chamber **50**. When all of the apertures **30** are uncovered by the web loop **35**, the vacuum in the chamber **50** will be relatively low because there is the maximum leakage of atmospheric air into the chamber **50**.

While the outfeed and infeed speeds of the web **10** are relatively constant and remain in a selected, desired relationship, the vacuum in the chamber **50** will remain generally unchanged because the length of the portion **33** of the loop **35** will remain the same. However when there is a change in the outfeed speed of the web **10**, relative to its infeed speed, there will be a proportional change in the vacuum in the chamber **50**. Such a change in the vacuum is transmitted, as a vacuum signal, through the vacuum line **52** to the transducer-amplifier **54**. This vacuum signal causes the position of the bellows **72** to change with respect to the orifice **70** in the tube **64**. The change in the position of the bellows **72**, with respect to the orifices **70**, causes a change in the air pressure in the conduits **59** and **60** which, in turn, causes the piston **84** to move within the cylinder **86** under or against the bias of the spring **88**. Movement of the piston **84** causes the rods **24** to change the position of the sheave **22**. This, in turn, changes the speed of the pulley **16** and hence the speed of the roller **14**. A change in the speed of the roller **14** causes a corresponding change in the infeed speed of the web **10** so that the infeed and outfeed speeds of the web will return to their desired relationship and so that a loop **35** of a predetermined length will again exist.

For example, when the degree of the vacuum in the chamber **50** increases (because the web outfeed speed has decreased with respect to the web infeed speed so as to lengthen the portion **33** of the loop **35** and cover more apertures **30** in the belt **28**), the change in the vacuum signal from the chamber **50** will cause the bellows **72** to more restrict the orifice **70**. Such increased restriction will cause the air pressure in the conduits **59** and **60** to increase since a similar volume of compressed air will be bled through the orifice **70**. When the air pressure in the conduits **59** and **60** increases, the piston **84** of the cylinder **62** will be forced outwardly against the bias of the spring **88**. Such movement of the piston **84** causes the connecting rods **24** to move around the pivot **25** so as to change the position of the Verisheave sheave **22**. This repositioning of the sheave **22** causes the speed of the pulley **16** and roller **14**, and thus the infeed speed of the web **10**, to be decreased so that the downwardly descending portion **33** of the loop **35** again shortens and exposes more of the apertures **30** in the belt **28**.

When the degree of the vacuum in the chamber **50** decreases, due to an increase in the web outfeed speed relative to the web infeed speed, the opposite occurs: namely, the bellows **72** expands and permits increased compressed air to bled from the conduits **59** and **60**. Thus the piston **84** will be moved under the bias of the spring **88**, and this movement of the piston **84** changes the position of the rods **24**, and thus the sheave **22**, is changed so as to increase infeed speed of the web **10**.

The transducer-amplifier **54** serves, in effect, to convert a low pressure vacuum signal into high pressure compressed air signal which, in turn, is used to control the length of the downward portion **33** of the loop **35**. The employment of the transducer-amplifier **54** permits the apparatus to operate with a relatively low level vacuum supplied by a conventional blower **42** rather than by relatively high vacuum supplied by a conventional vacuum compressor. This affords a practical advantage in that vacuum compressors frequently present maintenance problems. The transducer-amplifier **54** is capable, if properly adjusted, of amplifying a vacuum signal varying from 135 inches to 0.8 inches of H_2O to an air pressure signal varying from 10 and 25 psig—a pressure gain of over 900.

As shown in FIG. **3**, the web **10** may be turned through an angle of 90° and conveyed outwardly through the guides **45** and over the drive roller **36**, with the bottom surface **90** of the web **10** being in contact with the roller **36**. Similarly the web **10** may be turned up through an angle of substantially 180°. As shown in FIG. **5**, the web **10** may also be reversed so that the top surface, indicated at **92** as the web passes over the feed roller **14**, becomes the bottom surface, as the web passes over the roller **36**, and so that bottom surface, indicated at **90** as the web passes over the feed roller **14**, becomes the top surface as the web passes over the roller **36**.

From the foregoing, it is apparent that I have provided an improved apparatus for controlling the infeed speed of a loose loop of a web to match its outfeed speed so that damage to the web is minimized. Furthermore, the components used to control the web feed speed are relatively simple in construction and inexpensive to manufacture. The usage of the apparatus also permits the direction of the web to be changed through a substantial angle and the top and bottom surfaces of the web to be reversed, while still maintaining the proper relative infeed and outfeed speeds.

Thus, since the invention disclosed herein may be embodied in other specific forms without departing from the spirit or central characteristics thereof, the preferred embodiment described herein is therefore to be considered in all respects as illustrative and not restrictive, the scope of the invention being indicated by the appended claims, rather than by the foregoing description, and all changes which come within the mean-

ing and range of equivalency of the claims are therefore intended to be embraced therein.

I claim:

1. An improved apparatus for feeding a web of material from a source of supply to a desired destination, wherein the web forms a vertical loose loop between the source of supply and the desired destination, wherein the web is infed from the source of supply to the loose loop along a first predetermined direction, wherein the web moves from the loose loop toward the desired destination along a second predetermined direction, and wherein the loose loop of the web has a descending side, an ascending side and a downwardly extending curved portion interconnecting the lower ends of the descending and ascending sides of the loose loop;

means for feeding the web to the loose loop along the first predetermined direction and at a variable infeed speed, the feeding means including means for varying the infeed speed of the web;

a belt positioned to be in surface to surface contact with the web along at least a portion of the descending side of the loose loop, the belt having a series of evenly spaced perforations therein adapted to be positioned beneath the web when the web is in contact with the belt;

a source of vacuum;

a chamber having an open side disposed, in surface to surface engagement, with the belt on the side of the belt opposite its web-contacting surface;

means for connecting the source of vacuum with the chamber so that the degree of vacuum in the chamber may be varied by the number of perforations in the belt covered by the descending side of the loose loop of the web; and

means responsive to the variation in the degree of vacuum in the chamber for controlling the infeed speed varying means, and in turn, for controlling the infeed speed of the web to the loose loop.

2. The improved apparatus as described in claim **1** wherein the means for varying the infeed speed of the web includes a variable pitch sheave.

3. The improved apparatus as described in claim **2** wherein the vacuum responsive means includes a transducer amplifier that controls the position of the sheave which in turn, controls the infeed speed of the web.

4. The improved apparatus as described in claim **1** wherein the vacuum responsive means includes a transducer amplifier which is responsive to the degree of vacuum in which the degree of vacuum is controlled by the number of perforations in the belt covered by the descending side of the loose loop in the web.

5. The improved apparatus as described in claim **1** wherein the means for varying the infeed speed of the web includes a cylinder operated by compressed fluid; and wherein the pressure of the compressed fluid is controlled by and is responsive to the degree of vacuum in the chamber.

6. The improved apparatus as described in claim **2** wherein the vacuum responsive means includes a transducer amplifier responsive to the degree of vacuum in the chamber; and wherein a compressed air cylinder, which is controlled by the vacuum transducer, in turn controls the variable pitch sheave that drives the web at varying infeed speeds so as to match the web infeed speed with the outfeed speed of the web.

7. The improved apparatus as described in claim **1** wherein there is an angle formed between the first predetermined direction of the web and the second predetermined direction of the web.

8. The improved apparatus as described in claim **7** wherein the angle between the first predetermined direction and the second predetermined direction is at least 90°.

9. The improved apparatus as described in claim **8** wherein the angle is substantially 180°.

* * * * *