History of Control
History of PLC and DCS

Vanessa Romero Segovia and Alfred Theorin

2012-06-15 (minor revision 2013-07-26)

Provisur EX1019
U.S. Patent No. 11,331,823

1 Introduction

The way many industrial processes look today, is the result of many years of research and hard work of people commited to improve their functionality, management, and organization. One could recall the phrase "necessity is the mother of invention", and certainly this would fit the everyday work of control engineers and technicians working in industrial processes during the 50's and 60's. This necessity was the origin of devices such as the Programmable Logic Controller (PLC) and the Distributed Control System (DCS).

2 Programmable Logic Controller (PLC)

A programmable logic controller (PLC) is an industrially hardened computer-based unit that performs discrete or continuous control functions in a variety of processing plant and factory environments. It was originally intended as a relay replacement equipment for the automotive industry. Nowadays the PLC is used in virtually every industry imaginable. Though they were commonly referred to as PCs before 1980, PLC became the accepted abbreviation for programmable logic controllers, as the term "PC" became synonymous with personal computers in recent decades.

The sheer number of PLC applications is enormous. According to a recent Control Engineering magazine poll, "The major applications for PLCs include machine control (87%), process control (58%), motion control (40%), batch control (26%), diagnostic (18%), and other (3%)." The results dont add up to 100% because a single control system generally has multiple applications.

PLCs are produced and sold worldwide as stand-alone equipment by several major control equipment manufacturers. In addition, a variety of more specialized companies produce PLCs for original equipment manufacturer (OEM) applications.

2.1 The Birth of the PLC

The early history of the PLC goes back to the 1960's when control systems were still handled using relay control. During this time the control rooms consisted of several walls containing many relays, terminal blocks and mass of wires.

The problems related to such kind of systems were many, among those one could mention:

- The lack of flexibility to expand the process, as well as the inordinate amount of time needed to adjust the process when changes were needed.
- Troubleshooting which covered from dirty contacts, loose wires, outdated prints on the terminal blocks with informal nomenclature, to cryptic connection documentation.

These problems were faced continuously by technician and control engineers. At this time the adage "Five hours to find it and five minutes to fix it" was born.

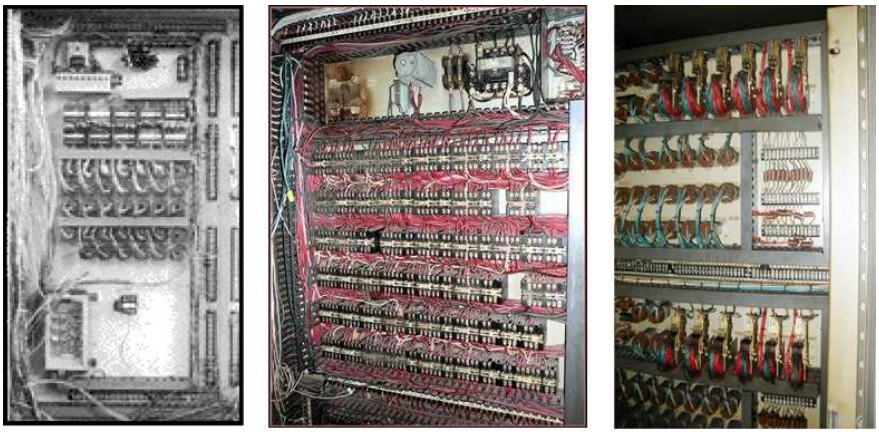

Figure 1: Manual relay panels from the early 1960s.

In 1968 Bill Stone, who was part of a group of engineers at the Hydramatic Division of General Motors Corporation, presented a paper at the Westinghouse Conference outlining their problems with reliability and documentation for the machines at this plant. He also presented a design criteria developed by the GM engineers for a "standard machine controller".

According to the criteria developed, the early model of this machine not only had to eliminate costly scrapping of assembly-line relays during model changeovers and replace unreliable electromechanical relays, but also:

- Extend the advantages of static circuits to 90% of the machines in the plant.
- Reduce machine downtime related to controls problems, easily maintained and programmed in line with already accepted relay ladder logic.
- Provide for future expansion, it had to be modular to allow for easy exchange of components and expandability.
- It had to work in an industrial environment with all it's dirt, moisture, electromagnetism and vibration.
- Include full logic capabilities, except for data reduction functions.

These specifications along with a proposal request to build a prototype, were given to four control builders:

- Allen-Bradley, by way of Michigan-based Information Instruments, Inc.
- Digital Equipment Corporation (DEC).
- Century Detroit.
- Bedford Associates.

2.2 The Race is On

Considering the proposal request, the team of Digital Equipment brought a "mini-computer" into GM, which finally was rejected for many reasons, from which static memory was one of its serious limitations.

Allen-Bradley, already well known for it's rheostats, relays and motor controls, responded at the risk of competing with one of its most successful core business which was the electromechanical relays. Expecting to fulfill the requirements of the proposal, Allen-Bradley went from prototype to actual production in five months. The first attempt, the PDQ-II or program data quantizier, was deemed too large, too complex and too hard to program. The second attempt, the PMC or programmable matrix controller, was smaller and easier to program, but still it was not able to fully serve customer needs for machine controls.

By the time of the proposal, people at Bedford Associates, which included Richard Morley, Mike Greenberg, Jonas Landau, George Schwenk and Tom Boissevain, were already working on the design of a unit, which characteristics included a modular and rugged design, the use of no interrupts for processing, as well as direct mapping into memory. The Bedford team named this unit as the 084, since it was the 84th project for the company. After finding some financial support, the team decided to form a new company called Modicon (MOdular DIgital CONtroller) which worked closely with Bedford to create the controller. The team at Modicon was finishing the design and build of the 084, that now they were calling the programmable controller (PC).

Finally in 1969, the winning proposal came from Bedford Associates and Modicon, when they demonstrated at GM the Modicon 084 solid-state sequential logic solver. The Modicon 084 consisted of three distinct components that included the processor board, the memory, and the logic solver board, which solved the dominant algorithms associated with ladder logic.

When the Modicon 084 was designed, it was built rugged with no ON/OFF switch, totally enclosed with conductive cooling, it was designed to be reliable. No fans were used, and outside air. As Richard Morley explains, "No fans were used, and outside air was not allowed to enter the system for fear of contamination and corrosion. Mentally, we had imagined the programmable controller being underneath a truck, in the open, and being driven around in Texas, in Alaska. Under those circumstances, we wanted it to survive. The other requirement was that it stood on a pole, helping run a utility or a microwave station which was not climate controlled, and not serviced at all".

2.3 The History goes On

By 1971, Odo Struger and Ernst Dummermuth engineers of Allen-Bradley, had begun to develop a new concept that included improvements based on the customer needs that could not be fulfilled by its second attempt, the PMC. This new concept was known as the Bulletin 1774 PLC. Allen-Bradley named this new device as the "Programmable Logic Controller" (PLC) over the then accepted term "Programmable Controller". The PLC terminology became the

Figure 2: Historical photo showing from left to right: Dick Morley, Tom Boissevain, Modicon 084, George Schwenk, and Jonas Landau.

industrial standard especially when PC became associated with personal computers. In 1985 Rockwell Automation acquired Allen-Bradley. The name of the new produced products are still associated to Allen-Bradley.

During this time Modicon was already gaining experiences through the Modicon 084. Based on this experience, the design cycle by Michael Greenberg, and the marketing ideas of Lee Rousseau, the Modicon 184 was born in 1973. The new model not only met the needs of the marketplace and the costumers, but also produced the take off of the Modicon company, setting it as the early leader in the market. Eventually the success of Modicon caused the dissolution of Bedford Associates, to avoid tax issues. In 1977 Modicon was sold to Gould Electronics, and later in 1997 to Schneider Electric, which still owns the brand today, and uses the Modicon name.

Around the 1970's, seven companies were in the PLC business, including contenders Allen-Bradley, Modicon, General Electric, Square D and Industrial Solid State Controls. And although PLCs were obviously a breakthrough that would revolutionize automation, they were still comparatively primitive. They were largely developed and used for specific applications, most often in the automotive industry.

The early days of the PLCs however, were not as straightforward nor as simple. There were many things that made the acceptance of the PLCs very difficult. As Morley explains, "We had some real problems in the early days of convincing people that a box of software, albeit cased in cast iron, could do the same thing as 50 feet of cabinets, associated relays, and wiring." Morley recounted that in 1969, "all computers required a clean, air-conditioned environment, yet were still prone to frequent malfunctions. ... Thus, even though PLCs were and are

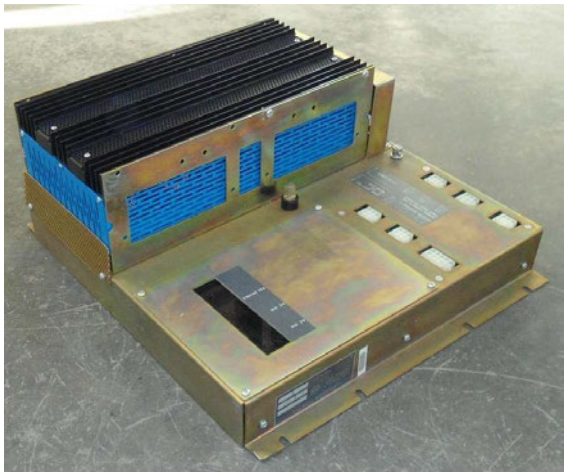

Figure 3: The first programmable logic controller of Allen Bradley, the Bulletin 1774 PLC. It was invented by Ernst Dummermuth in 1974.

Figure 4: The Modicon 184, second programmable controller of Modicon.

special, dedicated computers, considerable effort was made to not identify PLCs as computers due to the poor reliability of computers and the fact that they were not things procured by manufacturing operations." Unlike computers of that era, the programmable controller was designed to be reliable.

Beside these difficulties, another one was rising due to the dedicated hardware terminals employed to program the early PLC versions. These terminals posed high challenges for the PLC programmers. In this way, visionaries such as Scott Zifferer co-founder of ICOM software, and Neil Taylor owner of Taylor Industrial Software found the source of inspiration to begin the evolution of the PLC programming and documentation and to make enormous impacts on the shape of industrial automation.

Scott Zifferer was solely focused on Allen-Bradley products, according to his own words, "I wanted to use a computer for PLC programming and documentation, instead of the dedicated hardware Allen-Bradley called a T-3 Terminal. ... Allen-Bradley was, itself, developing a similar approach, but was slow in doing

so". Thus, the users of the T-3 begun to enjoy the comfort of the enhanced user interface that the ICOM software provided. The evolutionary approach to help control engineers and maintenance people interface with Allen-Bradley PLCs improved acceptance and opened new possibilities for the use of PLCs. Zifferer's company merged with Rockwell Automation in 1993.

Neil Taylor focused on Modicon PLCs, recalling Taylor's words, "I was consulting and saw the need to replace drafting table-produced ladder diagrams, which cost plenty to maintain and too much time to create." Taylor was initially focused on documentation, this resulted on a variety of report options and reporting formats which helped troubleshooting the PLCs, albeit off-line. He moved into online PLC program monitoring for Modicon and Allen-Bradley PLCs, and was widely successful with the Modicon offering. Additionally he moved into other elements of PLC programming and documentation support by adding more manufacturers to the line-up. Taylor sold his company to TCP, which later on was rolled into GE Fanuc.

2.4 PLC Evolution

The early 1980s saw a cross pollination between PLCs and distributed control systems (DCSs). Where PLCs already begun incorporating distributed control functions so they could be linked much in the way that DCSs were linked. Building on the trend, software companies sprang up in great numbers during this time. During the 90s, standardization and open systems were the main themes. Ethernet peer-to-peer networking became available from virtually all PLC manufacturers. EEPROM and Flash memories replaced the EPROMs of the 1980s. PCs and CRTs in general became accepted and started to replace switches and lights on control system panels. Small PLCs called "Bricks" were introduced to the marketplace. Redundancy for PLCs became a standard product. The first few years of the 21st century have seen a consolidation of PLC manufacturers. Very small nano or pico PLCs, some as small as industrial relays, have appeared. Safety PLCs featuring triple redundancy were introduced. LCD base operator interface panels have largely displaced CRTs, especially on the plant floor.

There is much more to say about the history of the PLC, and so far we have only focused on the two main vendors of PLCs which saw the birth of the PLC and kept still on the market, Modicon as part of Schneider Electric, and Allen-Bradley as part of Rockwell Automation. For completeness of the information Figure 5 shows additional information related to the contribution of these two companies to the history of the PLCs.

2.5 The Fathers of the PLC

2.5.1 Richard Morley

Considered by many as the father of the programmable controller. Among his credits are the design of the original ladder-logic programmable controller, and the creation of the ladder logic programming, that according to Morley the

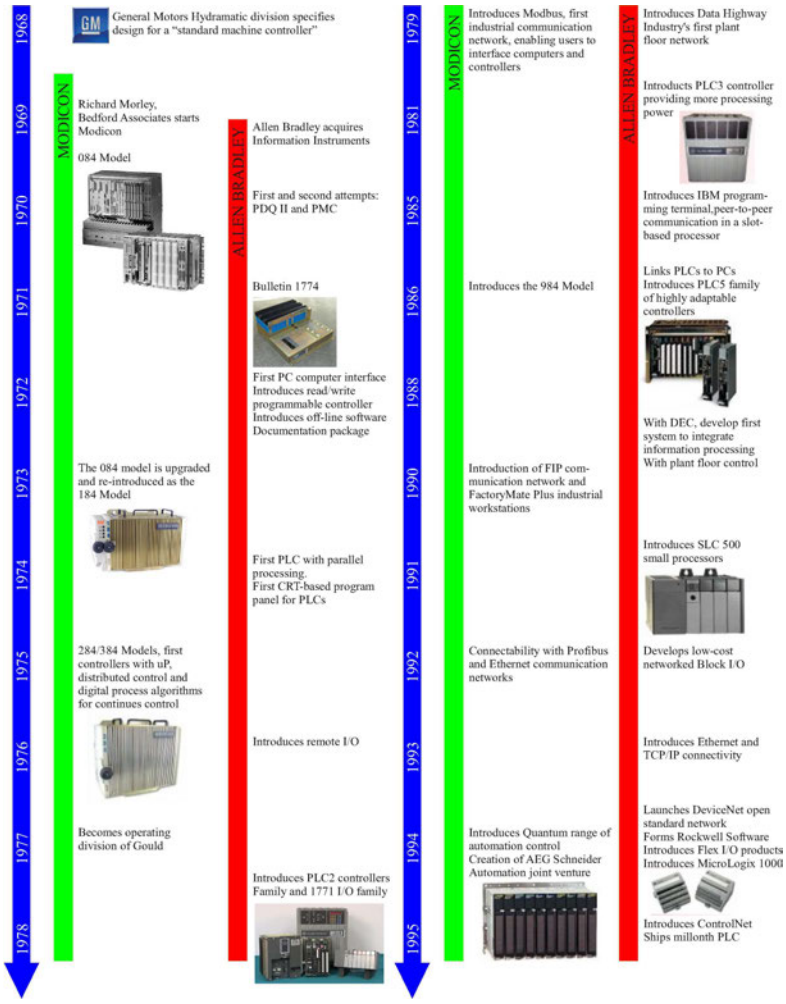

Figure 5: Modicon and Allen-Bradley PLC timeline (1968-1995).

diagrams on which ladder logic is based on was probably originated in Germany years before to describe relay circuitry.

The quintessential engineer and inventor with background in physics obtained in MIT, holds more that 20 U.S. patents and foreign patents and continues to work on novel computer designs, artificial intelligence, chaos and complexity, and the factory of the future. He is also part of the Manufacturing Hall of Fame.

The Society of Manufacturing Engineers offers the Richard E. Morley Outstanding Young Manufacturing Engineer Award for outstanding technical accomplishments in the manufacturing profession by engineers age 35 and under.

Figure 6: Richard Morley the father of the PLC.

2.5.2 Odo Josef Struger (1931-1998)

Often called the father of the Allen-Bradley PLC and credited with creating the PLC acronym. After moving from Austria to the U.S. in the 1950's, he became an engineer at Allen-Bradley in 1958, retiring in 1997 as Rockwell Automation's vice president of technology.

Strugger also developed PLC application software during his nearly 40 year career at Allen-Bradley/Rockwell Automation, he also played a leadership role in developing the National Electrical Manufacturers Association (NEMA) and the International Electrotechnical Commission (IEC) 1131-3 PLC programming language standards. Strugger has been awarded 50 patents and is part of the Automation Hall of Fame.

Figure 7: Odo Josef Struger the father of the Allen-Bradley PLC.

3 DCS

3.1 Early Process Control

In the early days of process control, i.e. in the 1950s and before, the control system implementation consisted of analog devices which were connected by wiring them together by hand. If the control was to be redesigned, the devices had to be rewired which typically would take a considerable amount of time, during which the process had to be stopped. Larger changes involving extensive rewiring would require the process to stand still for a long time, meaning less production and consequently less sales and less profit. Thus, with an analog control system, production companies were less flexible and much more reluctant to make changes than today.

The largest part of the cost of analog control systems were the analog devices themselves, meaning that the cost of adding a control loop was practically independent of the number of already existing control loops. A consequence of this is that it might not be economically defensible to automate certain simpler procedures, simply due to the cost of the analog devices required for this. Adding more control loops also meant that the analog devices would consume more space, and the space required would practicaly grow linearly with the number of control loops. Also, with each control loop added, additional analog indicators, buttons, and knobs had to be added to the operator supervision panel to facilitate convenient process operator supervision. This kind of setup is pretty cool to look at, but relatively inconvenient to work with.

Figure 8: An analog control room.

3.2 The 1950s - The Pioneering Period

In 1956 the automotive and aerospace company Thomson Ramo Wolridge (TRW) together with the oil company Texaco initiated a study to evaluate if it was possible to make use of computers for process control. Three years and 30 man years later a computer controlled system based on TRW's RW-300 computer was online. To get a feel on the state of art of computers at this time, an addition could take $1ms$, a multiplication $20ms$, and the mean time between failure (MTBF), i.e. how often the CPU performed incorrectly, was 50–100h. It should be obvious that these computers could not be used for real time control. Instead they were used for supervision, printing instructions for the process operator, or changing set points of analog control equipment. The analog equipment then still performed the control, but with the help of a computer.

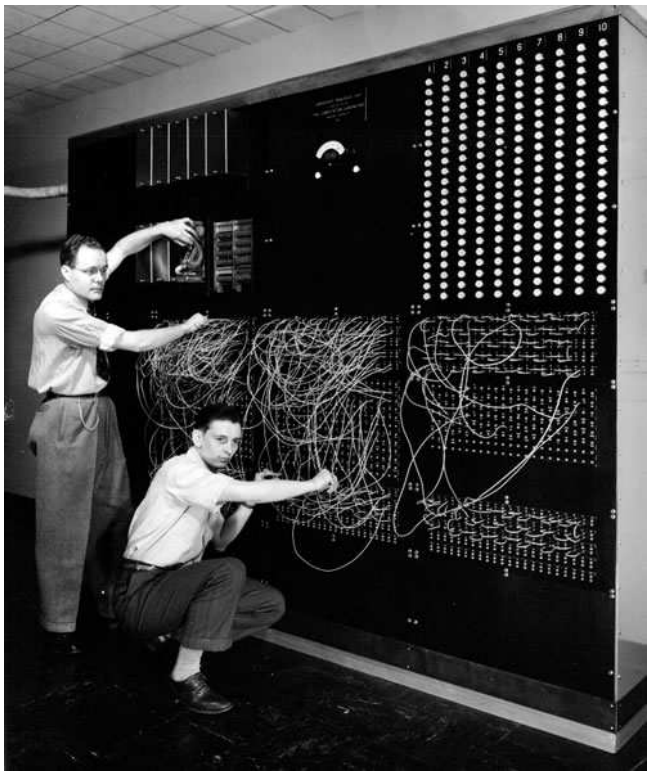

Figure 9: The Harvard Mark I computer from 1944.

Following the TRW and Texaco example many more similar studies were made by various companies in various industries in the following years. The outcome of these studies were improved understanding of the processes, as well as specialized computers for process control. One such computer that was widely used in paper mills and oil refineries for quality control and process optimization was the IBM 1710 which was launched in 1961 and consisted of the IBM 1620 general purpose computer and an IBM 1711 A/D converter. It had support for interrupts, which was a contribution from the studies due to special requirements for process control, and was something that did not exist in the general purpose

computers at the time.

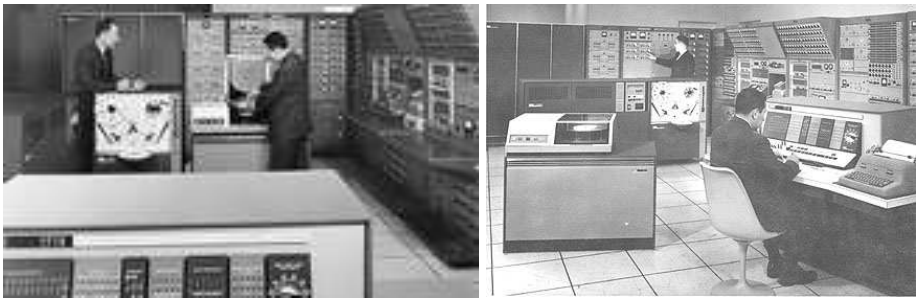

Figure 10: The IBM 1710 from 1961.

3.3 The 1960s - Direct Digital Control

The next leap in process control was made in 1962 when the British chemical company Imperial Chemical Industries (ICI) replaced a complete analog control system in an ammonia/soda plant by an Argus computer. Instead of just being used for supervisory tasks for the analog control system, a computer was now actually performing the control. This form of pure digital control would come to be called Direct Digital Control (DDC). There were several advantages with replacing the analog control system by a computer, e.g. lower cost, improved operator interfaces, and better flexibility. An Argus computer was fairly expensive but if it was used to replace a large heap of analog equipment, then for sufficiently large systems the total cost would be lower. Computer based digital operator panels instead of large analog indicator boards also made the operator supervision more convenient. Finally, instead of having to rewire the analog equipment one could simply replace the program. Switching between and evaluating new control strategies could now be done much faster, and it was also easy to roll back if the new program was incorrect or had poor performance.

Figure 11: An Argus computer from 1961 by Ferranti.

The Argus computer was developed by the British electical engineering and equipment company Ferranti for military purposes; to control the launch control post for the Bloodhound Mk2 missile. The Argus evolved into a widely used industrial control computer that is still used for monitoring and control of nuclear reactors in the UK.

In the years to come DDC langauges emerged which made it almost trivial to implement control designs in DDC systems. No programming was required, one simply organized I/O configurations and connections in tables and the DDC system would then execute the control based on these tables. This made it very easy to implement the common control schemes that were implemented in the DDC system, but very difficuly to do anything else. In a way this held back the development of more sophisticated control schemes, as implementing these required a huge effort compared to the common control schemes. Due to its simplicity and efficiency, DDC is still widely used for building automation, i.e. for heating, ventilation, and air conditioning systems. The most used building block of today's DCS systems, i.e. the Function Block, also has its roots in the table oriented DDC languages.

3.4 The 1970s - Cheaper computers

With the birth of the minicomputers in the mid 60s came more opportunities. Minicomputers meant that computers became cheaper, faster, and more reliable. Cheaper meant that it became profitable to implement smaller systems with computers instead of analog control systems. Faster computers meant that computers could be used to control faster processes. More reliable meant that more critical processes could be implemented safely using computers. This resulted in an explosion in the number of computers used for process control, from 5000 1970 to 50000 1975.

Figure 12: An IBM1800 minicomputer from 1964.

One popular minicomputer was the IBM 1800 Data Acquisition and Control System, a process control variant of the IBM 1130 which was released in 1964. It was described as "a computer that can monitor an assembly line, control a steel-making process, or analyze the precise status of a missile during test firing.". The last operating IBM 1800s were decommissioned in June 2010. A video showing how to boot the IBM 1800 is available on Youtube [54]. Watching this video right away is recommended as it will give you a feel of the computers of this time; let's just say that compared to booting a desktop computer today it involves more than pressing a button once.

The invention of the microcomputers in the early 70s was the final blow to the analog control systems. The price was brought down drastically from approximately $10000 for a minicomputer to approximately $500 for a microcomputer. Computers were now so cheap that no matter how small the control system, it was cheaper to implement it with a computer than with analog devices.

Figure 13: A military ad from the 1970s.

3.5 The 1980s - DCS Emerges

Up until now, the technological advances for process control was primarily concerned with replacing the analog control system with computers. The next big step forward was when truly distributed control systems were introduced. In the early 1980s, the Australian company R-Tec got a contract to deliver an advanced building automation system for the University of Melbourne. When R-Tec closed down due to not being able to fulfil its commitments, the project was taken over by Midac (Microprocessor Intelligent Data Acquisition and Control). The outcome was one of the first successful implementations of a distributed DDC system. The system consisted of a central system with 11 Z80 microprocessors sharing tasks and memory which coordinated distributed con-

trollers over a serial network. Inspired by Midac, some of the larger vendors like Honeywell and Johnson Controls were quite fast in making their own solutions based on the same idea.

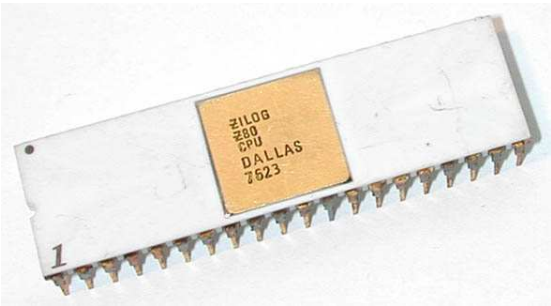

Figure 14: A Z80 microprocessor.

The typical network of choice for this time period was the IEEE 802.4 Token Bus Network. The network contains a token which is owned by one node at a time. Only the node owning the token may transmit and when it is done transmitting, the token is passed to the next node. This kind of networks is very sensitive to failures, e.g. consider the case when the node owning the token goes down, then it cannot pass on the token and no more transmissions will be made in the network. Handling this kind of situations is very hard with this kind of network communication and when the control was beginning to get distributed, more reliable networks were required, which meant that a lot of effort was put into developing networks with support for redundancy and real-time communication.

Another big topic during the 80s was the development of new control languages. Up until now, DDC languages were basically the only ones used. Inspired by the object oriented concepts in computer science, object orientation was also introduced for process control by Midac in 1982. Several other initiatives on object oriented control languages were conducted in the 80s, e.g. from our own department we have Hilding Elmqvist's PhD thesis "LICS - Language for Implementation of Control Systems" [2].

3.6 The 1990s - The Fieldbus Wars

With the introduction of distributed control came the necessity to communicate between the devices and the controllers. One issue was that the systems were closed and that there was no standard communication protocol to connect them with. Another issue was that even though the controllers were now digitalized, the controller still communicated with the devices using analog signals. A large drive was thus towards digitalization of the communication with the devices and standardization of the communication.

Several organizations strived to develop the dominating fieldbus and some DCS vendors also created their own fieldbuses. None of them became the dominant one and the result of this was instead an abundance of fieldbuses, of which practically all are still present and used today, e.g. Profibus PA, FOUNDATION,

ControlNet, DeviceNet, and ModBus. Reducing the number of used fieldbuses and converging towards a dominant one is something that does not seem to be happening. Quite on the contrary many new fieldbuses have recently been developed or are under development, motivated by moving away from custom cable installations towards much cheaper ethernet based equipment, which also has the advantage that one will be able to make use of the continuous improvements of the ethernet technology.

Figure 15: Logos for some fieldbuses.

Figure 16: A PROFIBUS cable.

The domination and popularity of Microsoft Windows during the 90s also affected the DCS business. Practically everything above the real-time level was now written to run on Windows. Also OLE for Process Control (OPC), the de facto industry standard for accessing real-time data that is still dominant today, builds on the Microsoft proprietary technologies OLE, COM, and DCOM. The next generation OPC standard, OPC UA, is currently under development and has as one of its aims to move away from the tight coupling to Windows.

Before the 90s the DCS companies were hardware centered, producing practically everything used in the control system themselves, both hardware and software. During the 90s commercial off-the-shelf (COTS) products emerged, of which some could do almost the same thing as the self-produced hardware. Producing some of the hardware was thus no longer justifiable and the DCS companies slowly started to move towards being more software centered. This is transition that is still going on today.

3.7 DCS Company History

Many companies have contributed to making the DCS industry what it is today. However, due to this large number of companies it has been considered beyond the scope of this this project to go into details about each specific company. Instead the focus has been on outlining the company history tree, specifically related to the leading companies in the DCS business today; ABB, Emerson, Honeywell, Invensys, Rockwell, Siemens, and Yokogawa.

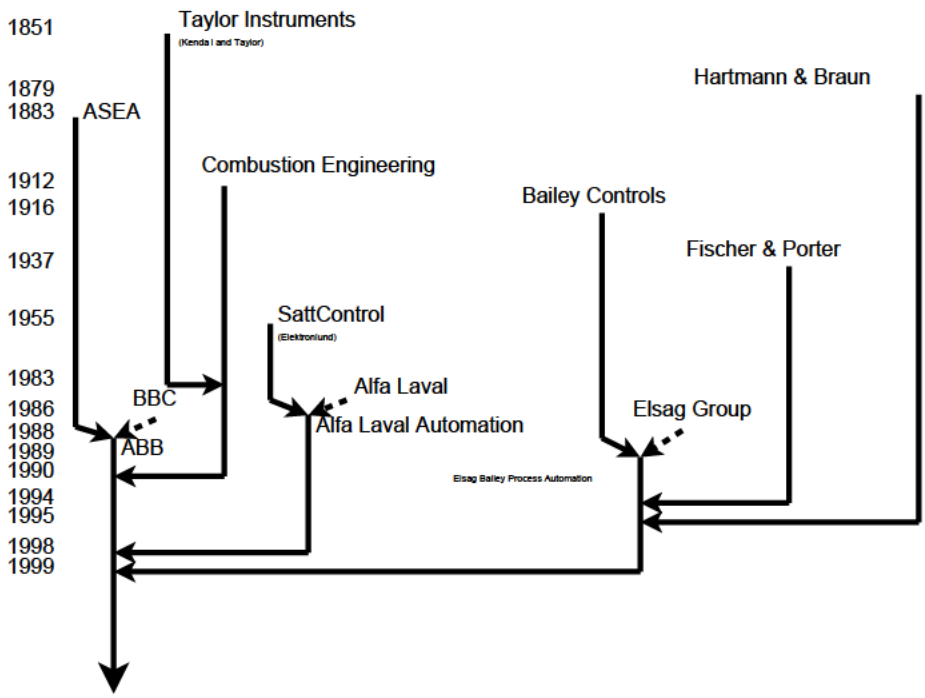

Figure 17: ABB

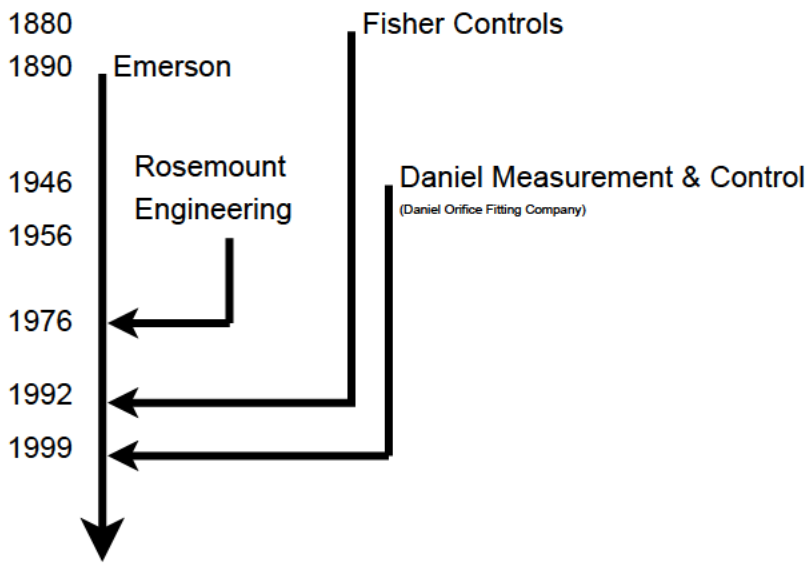

Figure 18: Emerson

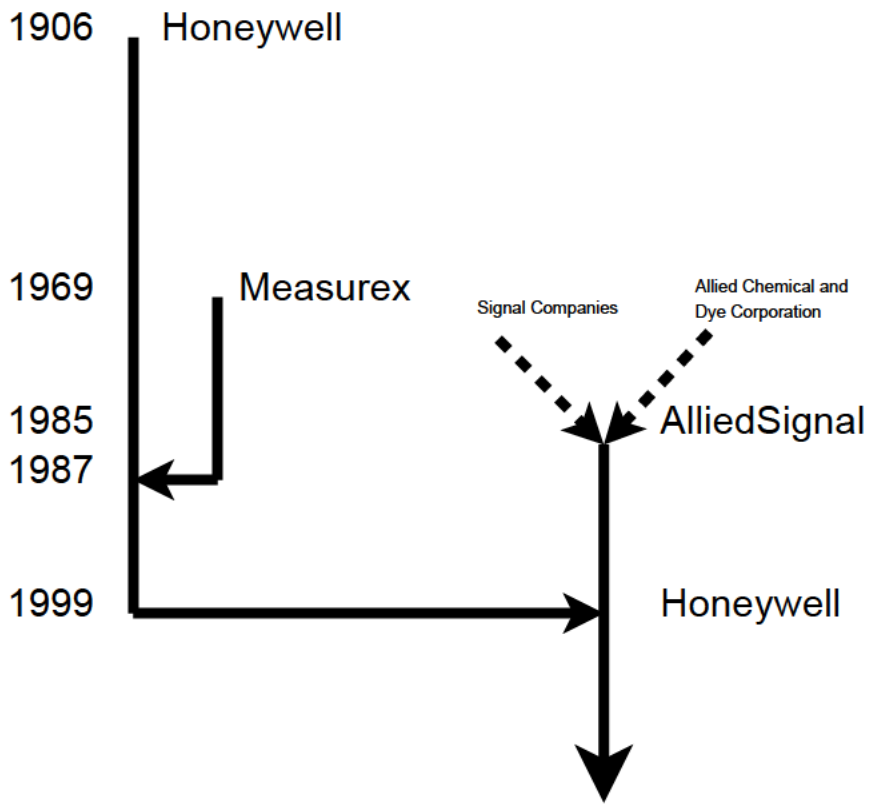

Figure 19: Honeywell

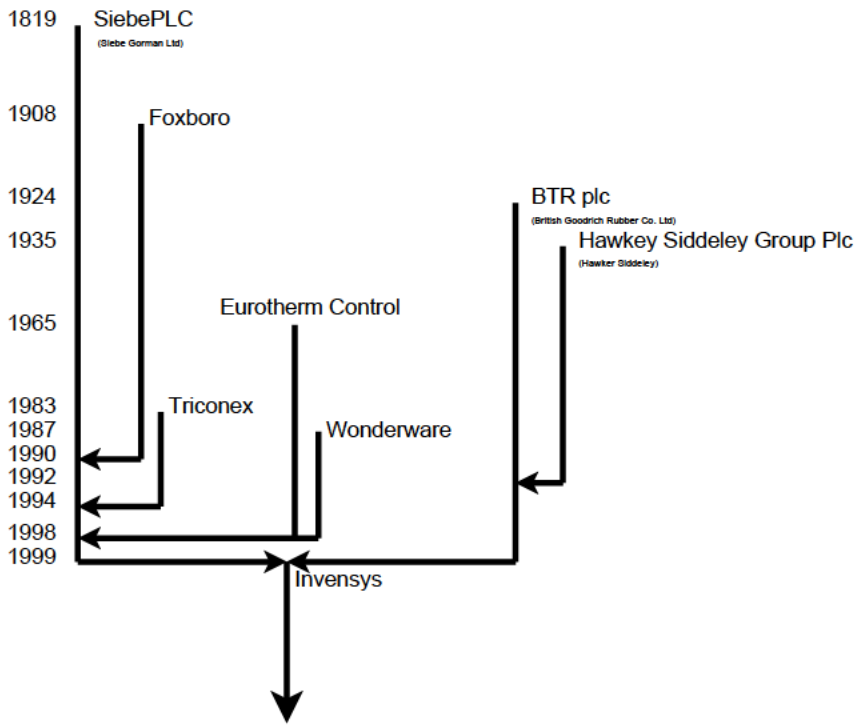

Figure 20: Invensys

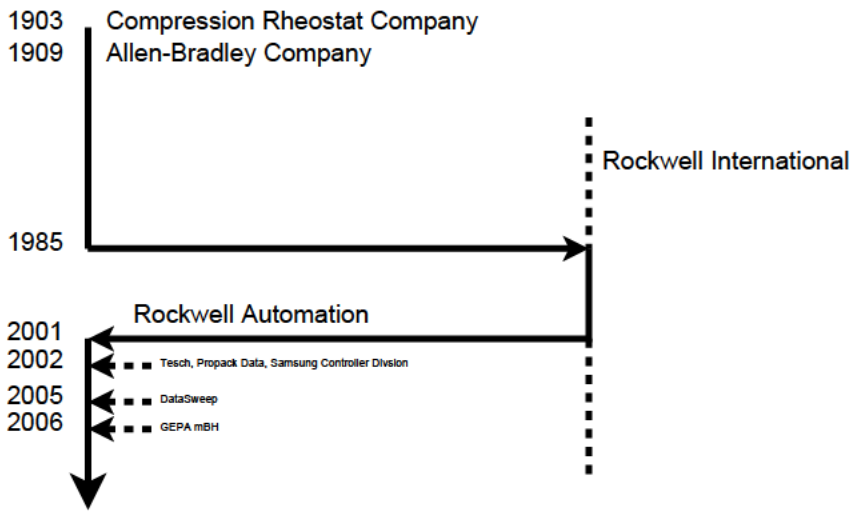

Figure 21: Rockwell

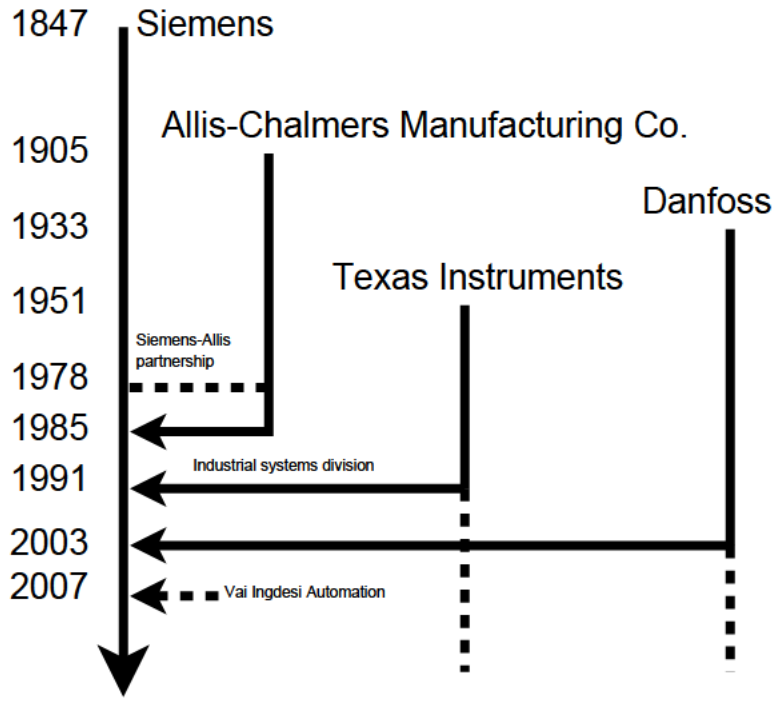

Figure 22: Siemens

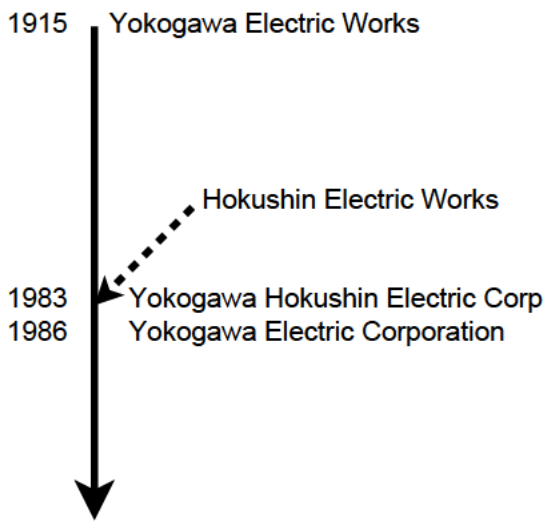

Figure 23: Yokogawa

4 Outlook

Both the PLC and the DCS systems have had an exciting development and have made a great impact on the manufacturing industry, allowing to automate industrial processes with multiple input/ouptut arrangements in real time. The fundamental advantage introduced by these systems is the fact that they use programming rather than rewiring to configure for a new application or to try out a new control strategy. Additionally, due to the solid-state nature they offer greater reliability, require less maintenance, have a longer life than mechanical relays or other analog equipment, and can withstand extreme industrial enviromental conditions. For all these reasons, they have been recognized as a significant advancement in the practice of automation.

Historically PLC and DCS have been used for different tasks or in different industry segments, but as PLC and DCS systems are becoming more and more similar the vendors are now starting to actively break into and compete about each other's customers. It will be interesting to see the future development and what future automation systems will look like when the best aspects of the two are combined.

References

[1] Åström, K.J., Wittenmark, B.: Computer Controlled Systems—Theory and Design. Prentice-Hall, Englewood Cliffs, New Jersey (Jan 1984)

[2] Elmqvist, H.: Lics - language for implementation of control systems. Technical Report ISRN LUTFD2/TFRT--3179--SE, Department of Automatic Control, Lund University, Sweden (Dec 1985)

[3] http://ed-thelen.org/comp-hist/BRL64-i.html

[4] http://en.wikipedia.org/wiki/Abb

[5] http://en.wikipedia.org/wiki/AIM-65

[6] http://en.wikipedia.org/wiki/BTR_plc

[7] http://en.wikipedia.org/wiki/Control_Data_Corporation

[8] http://en.wikipedia.org/wiki/Direct_digital_control

[9] http://en.wikipedia.org/wiki/Distributed_Control_System

[10] http://en.wikipedia.org/wiki/Emerson_Electric_Company

[11] http://en.wikipedia.org/wiki/Eurotherm

[12] http://en.wikipedia.org/wiki/Ferranti_Argus

[13] http://en.wikipedia.org/wiki/Hawker_Siddeley

[14] http://en.wikipedia.org/wiki/IBM_1800_Data_Acquisition_and_Control_System

[15] http://en.wikipedia.org/wiki/Invensys

[16] http://en.wikipedia.org/wiki/Midac

[17] http://en.wikipedia.org/wiki/Minicomputer

[18] http://en.wikipedia.org/wiki/OLE_for_process_control

[19] http://en.wikipedia.org/wiki/OPC_Unified_Architecture

[20] http://en.wikipedia.org/wiki/Rockwell_Automation

[21] http://en.wikipedia.org/wiki/Siebe_plc

[22] http://en.wikipedia.org/wiki/Siemens

[23] http://en.wikipedia.org/wiki/Token_bus_network

[24] http://en.wikipedia.org/wiki/TRW

[25] http://en.wikipedia.org/wiki/Wonderware

[26] http://findarticles.com/p/articles/mi_m0EIN/is_2000_April_12/ai_61464672/

[27] http://historyofasaferworld.blogspot.se/2012/02/founding-of-triconex.html

[28] http://honeywell.com/About/Pages/our-history.aspx

[29] http://www-03.ibm.com/ibm/history/exhibits/mainframe/mainframe_2423PH1620.html

[30] http://www-03.ibm.com/ibm/history/exhibits/vintage/vintage_4506VV4021.html

[31] http://www-03.ibm.com/ibm/history/exhibits/vintage/vintage_4506VV4022.html

[32] http://www2.emersonprocess.com/en-US/brands/Pages/AllBrands.aspx

[33] http://www.abb.com/cawp/abbzh252/1f5ba35208d1e5e1c125791900224ba8.aspx

[34] http://www.abb.com/cawp/abbzh252/8024d96d5bf8191ec125791900224b80.aspx

[35] http://www.abb.com/cawp/abbzh252/8659e073a6853e14c1257919002249de.aspx

[36] http://www.abb.com/cawp/abbzh252/88c19477a996bd94c1257876003d6836.aspx

[37] http://www.abb.se/cawp/abbzh252/8024d96d5bf8191ec125791900224b80.aspx

[38] http://www.analogmuseum.org/english/collection/eai/tr10/

[39] http://www.answers.com/topic/daniel-measurement-and-control-inc

[40] http://www.apv.com/us/aboutus/historyandfacts/History+and+Facts.asp

[41] http://www.classicautomation.com/Taylor_Heritage.aspx

[42] http://www.computerhistory.org/collections/accession/102646234

[43] http://www.emersonindustrial.com/en-us/brands/Pages/brands.aspx

[44] http://www.fundinguniverse.com/company-histories/Fisher-Controls-International-LLC-Company-History.html

[45] http://www.fundinguniverse.com/company-histories/Foxboro-Company-Company-History.html

[46] http://www.metronome-trading.com/argus/

[47] http://www.midac.com.au

[48] http://www.neatorama.com/2008/01/25/the-wonderful-world-of-early-computing/

[49] http://www.retrothing.com/2008/10/incomprehensibl.html

[50] http://www.rockwellautomation.com/about_us/history.html

[51] http://www.sattcontrol.se/sida/sida2.php?select=meny6

[52] http://www.thefreelibrary.com/Elsag+Bailey+Process+Automation+N.V.+to+acquire+the+Hartmann+%26+Braun...-a017449406

[53] http://www.vintageadbrowser.com/military-ads-1970s/7

[54] http://www.youtube.com/watch?v=QdHWFn94KjQ