US009044872B2

(12) **United States Patent**
Pryor et al.

(10) **Patent No.: US 9,044,872 B2**
(45) **Date of Patent: Jun. 2, 2015**

(54) **INTERLEAVER SYSTEM FOR HIGH SPEED SLICING MACHINE**

(75) Inventors: **Glen F. Pryor**, Manhattan, IL (US); **Wayne H. Webster**, Wilmington, IL (US)

(73) Assignee: **FORMAX, INC.**, Mokena, IL (US)

(*) Notice: Subject to any disclaimer, the term of this patent is extended or adjusted under 35 U.S.C. 154(b) by 919 days.

(21) Appl. No.: **13/214,748**

(22) Filed: **Aug. 22, 2011**

(65) **Prior Publication Data**

US 2012/0073249 A1 Mar. 29, 2012

Related U.S. Application Data

(60) Provisional application No. 61/375,517, filed on Aug. 20, 2010.

(51) **Int. Cl.**

B65B 25/08	(2006.01)
B65B 61/20	(2006.01)
B26D 7/32	(2006.01)
B65B 41/12	(2006.01)
B65B 61/06	(2006.01)
B26D 5/00	(2006.01)

(52) **U.S. Cl.**

CPC ***B26D 7/325*** (2013.01); ***B65B 61/207*** (2013.01); *B26D 5/00* (2013.01); ***B65B 25/08*** (2013.01); ***B65B 41/12*** (2013.01); ***B65B 61/06*** (2013.01); *B26D 2210/02* (2013.01)

(58) **Field of Classification Search**

CPC B65B 25/08; B65B 61/207; B26D 7/325; B26D 2210/02

USPC 53/157, 513–519; 426/420; 242/418.1, 242/421.5, 422.4

See application file for complete search history.

(56) **References Cited**

U.S. PATENT DOCUMENTS

2,635,965	A *	4/1953	Hensgen et al.	53/157
2,760,871	A *	8/1956	Hensgen et al.	53/157
2,781,272	A *	2/1957	Rudnik et al.	53/157

(Continued)

FOREIGN PATENT DOCUMENTS

DE	4125539	A1 *	2/1993	B65B 25/08
EP	0 251 337	A2	1/1988	
WO	2007/050677	A2	5/2007	

OTHER PUBLICATIONS

Search Report for European Application No. EP 11 81 8888 dated Feb. 11, 2015, 6 pages.

Primary Examiner — Stephen F Gerrity

(74) *Attorney, Agent, or Firm* — Klintworth & Rozenblat IP LLC

(57) **ABSTRACT**

A sheet interleaver is provided for a slicing machine that includes a slicing plane for slicing an elongated food product and a sheet of web material beneath the elongated product. The interleaver includes a supply of web material, a drawing station, and a feed station. A tensioning station is disposed between the supply of web material and the drawing station to maintain the tension of the web material at a pre-determined tension. A web accumulation station is between the drawing station and the feed station to provide a slackened length of web material within an acceptable range of slack between the drawing station and the feed station. The supply of web material is disposed on a spool which rotates about a cylindrical shaft. The cylindrical shaft has a braking mechanism which protrudes from the shaft to generate a frictional force against the spool.

9 Claims, 26 Drawing Sheets

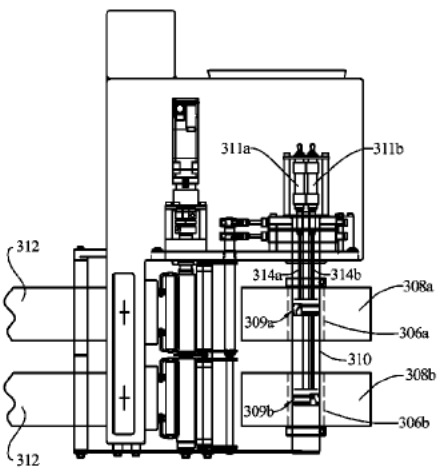

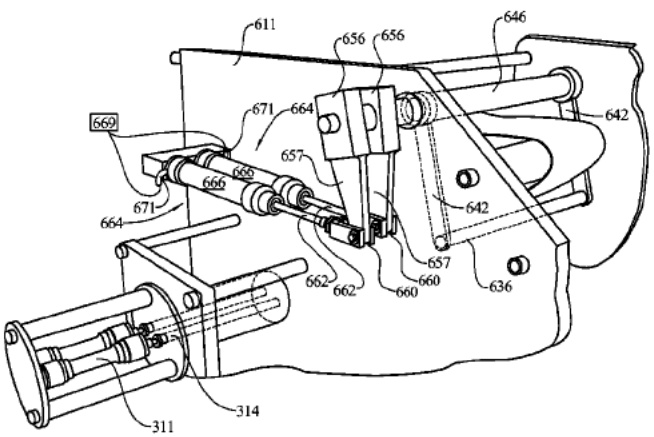

(56) **References Cited**

U.S. PATENT DOCUMENTS

2,877,120	A	*	3/1959	Bush	53/157
2,900,143	A	*	8/1959	Bandy et al.	242/418.1
3,312,415	A	*	4/1967	Jeans	242/421.5
3,481,746	A		12/1969	Clemens	
3,537,497	A	*	11/1970	Dickow et al.	83/13
3,718,221	A		2/1973	Visser	
3,772,040	A	*	11/1973	Benson et al.	53/157
3,782,649	A	*	1/1974	Frederick et al.	242/418.1
3,782,653	A		1/1974	Jones	
3,826,438	A	*	7/1974	Stanley	242/421.5
3,918,561	A		11/1975	Isacsson	
4,000,865	A		1/1977	Gaskins	
4,213,576	A	*	7/1980	Magnuson	242/528
4,447,016	A	*	5/1984	Enberg et al.	242/413.3
4,583,435	A		4/1986	Fessler	
4,611,799	A	*	9/1986	Nuttin	242/418.1
5,170,956	A	*	12/1992	McTaggart	242/422.4
5,426,917	A	*	6/1995	Daane et al.	53/435
5,501,412	A	*	3/1996	McAleavey	242/418.1
5,505,401	A	*	4/1996	Lamothe	242/412.2
5,628,237	A		5/1997	Lindee et al.	
5,649,463	A		7/1997	Lindee et al.	
5,704,265	A		1/1998	Johnson et al.	
5,707,024	A	*	1/1998	Mellquist et al.	242/418.1
5,724,874	A		3/1998	Lindee et al.	
6,095,391	A	*	8/2000	Fiske et al.	242/418.1
6,237,585	B1		5/2001	Oishi et al.	
6,260,783	B1		7/2001	Realff et al.	
6,484,615	B2		11/2002	Lindee	
6,623,412	B2	*	9/2003	Terranova et al.	242/418.1
6,752,056	B1		6/2004	Weber	
6,834,823	B2	*	12/2004	Nauta et al.	242/418.1
2003/0052148	A1		3/2003	Rajala et al.	
2003/0145700	A1		8/2003	Lindee	
2007/0256902	A1		11/2007	Niehorster et al.	
2008/0250944	A1		10/2008	Pryor et al.	
2009/0188363	A1		7/2009	Lindee et al.	
2011/0081225	A1	*	4/2011	Ward et al.	414/789.5

* cited by examiner

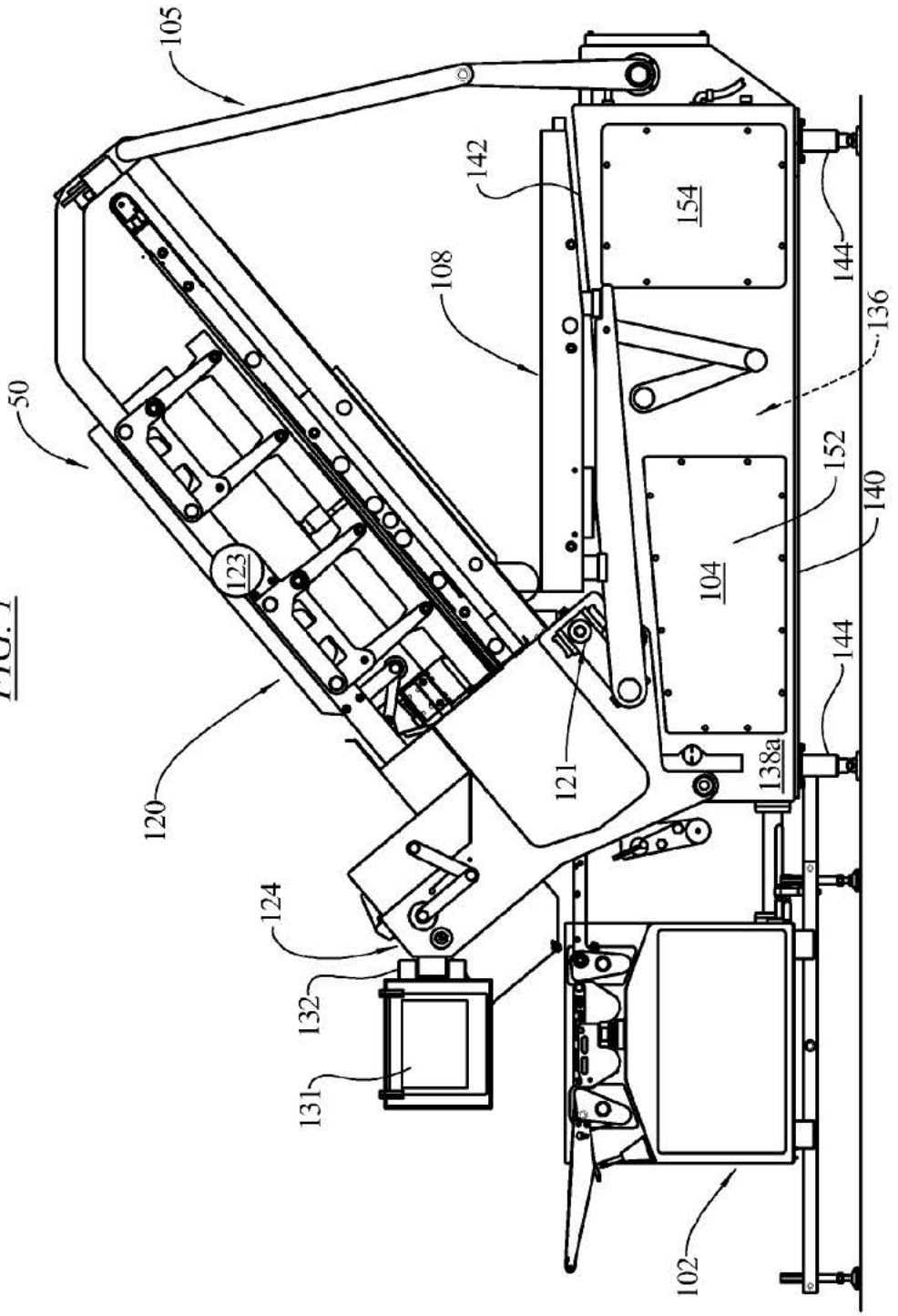
105
142
154
144
108
136
50
152
140
104
123
144
121
138a
120
124
132
131
102

FIG. 1

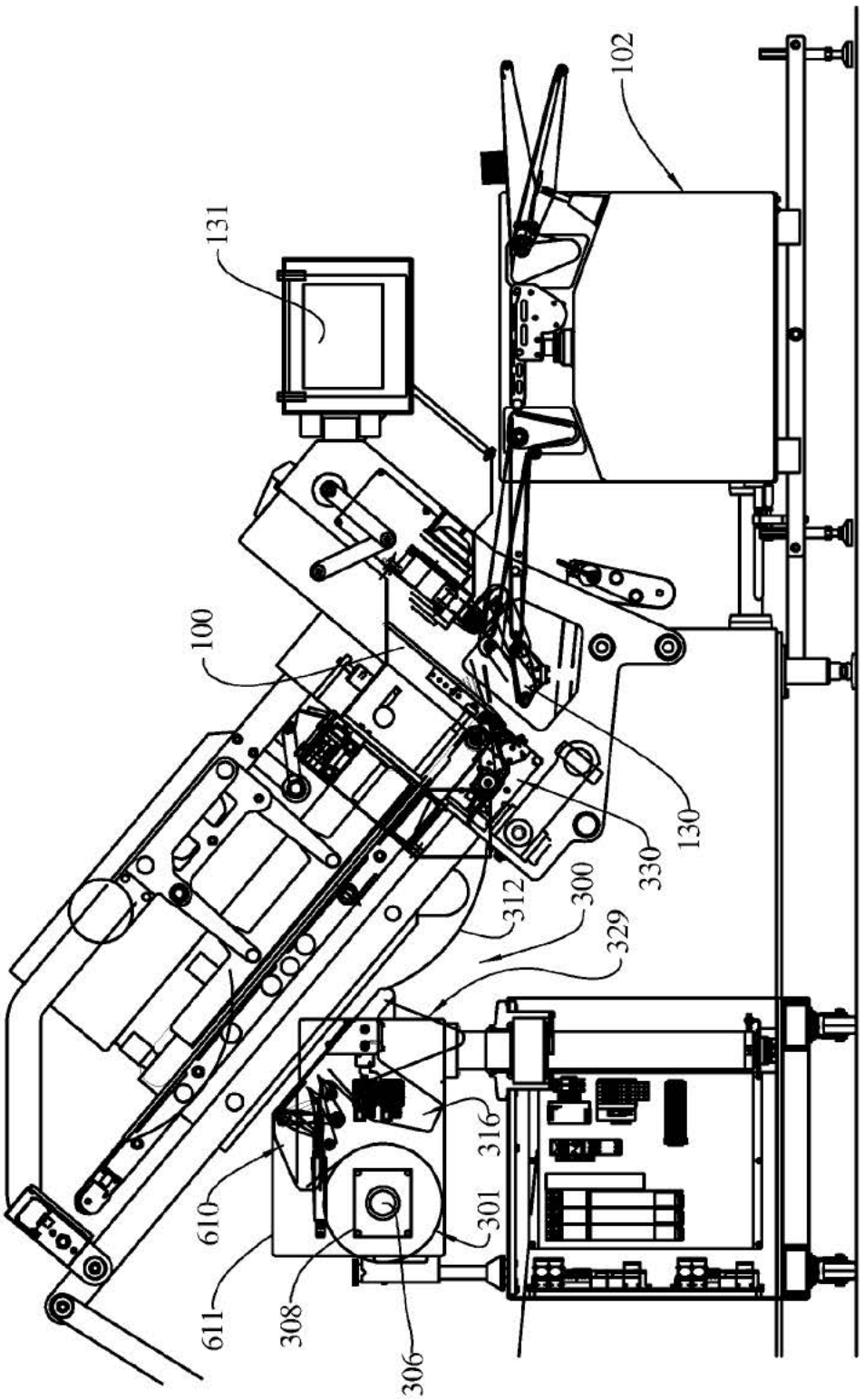

FIG. 2

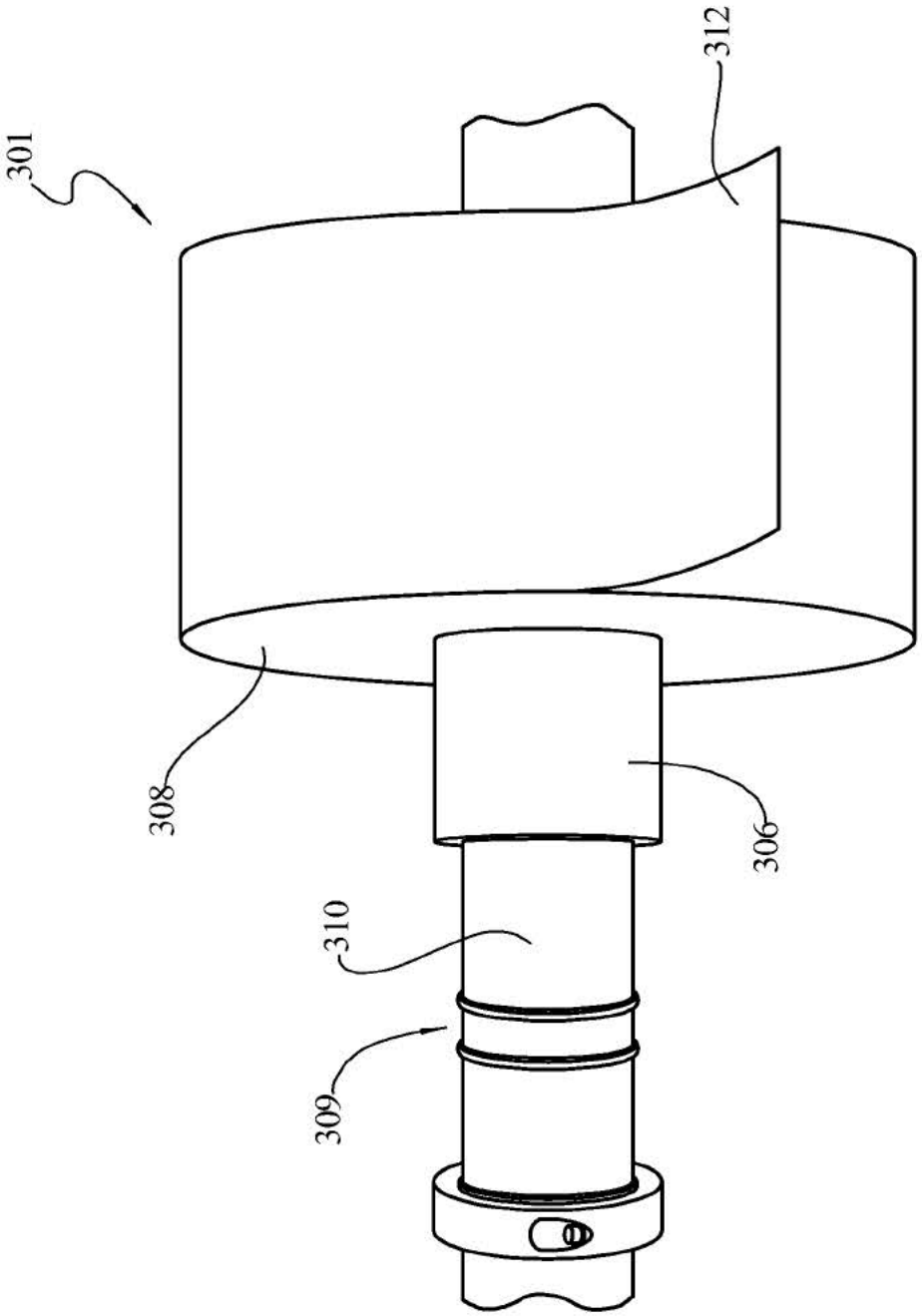

FIG. 3

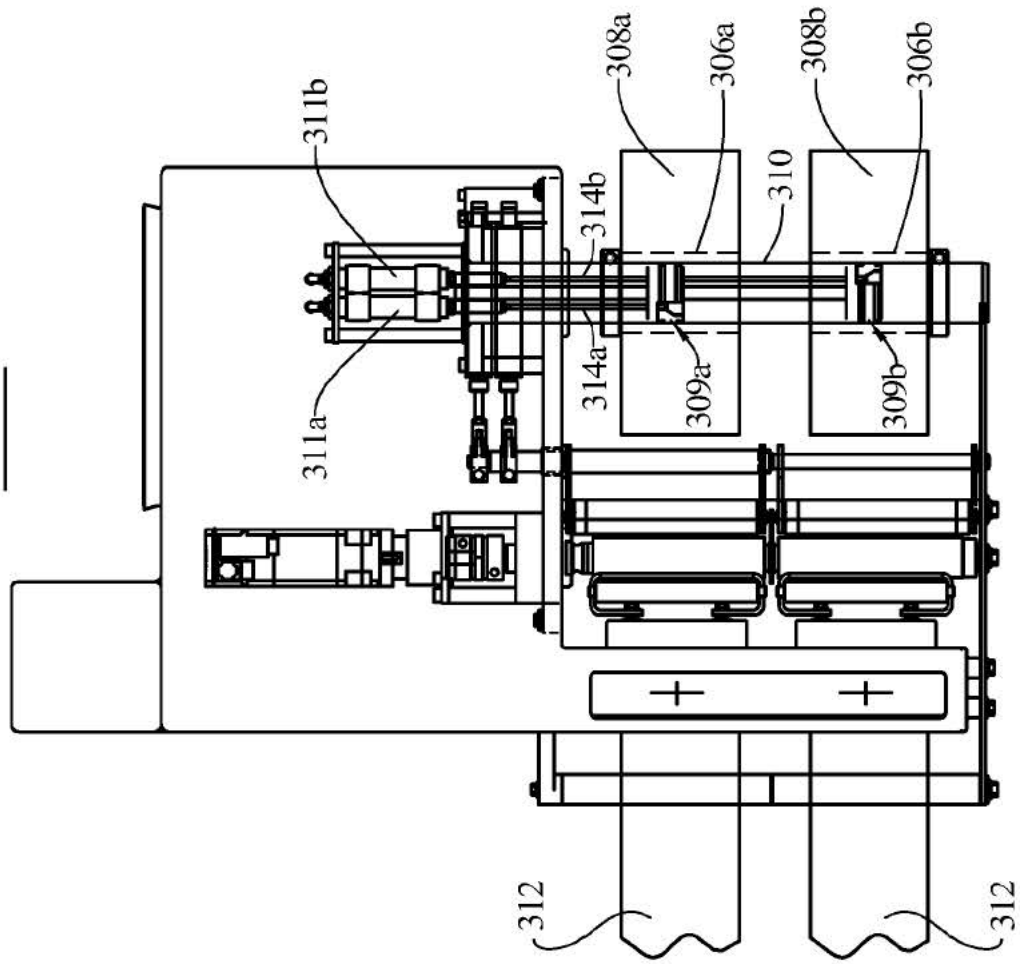

FIG. 4

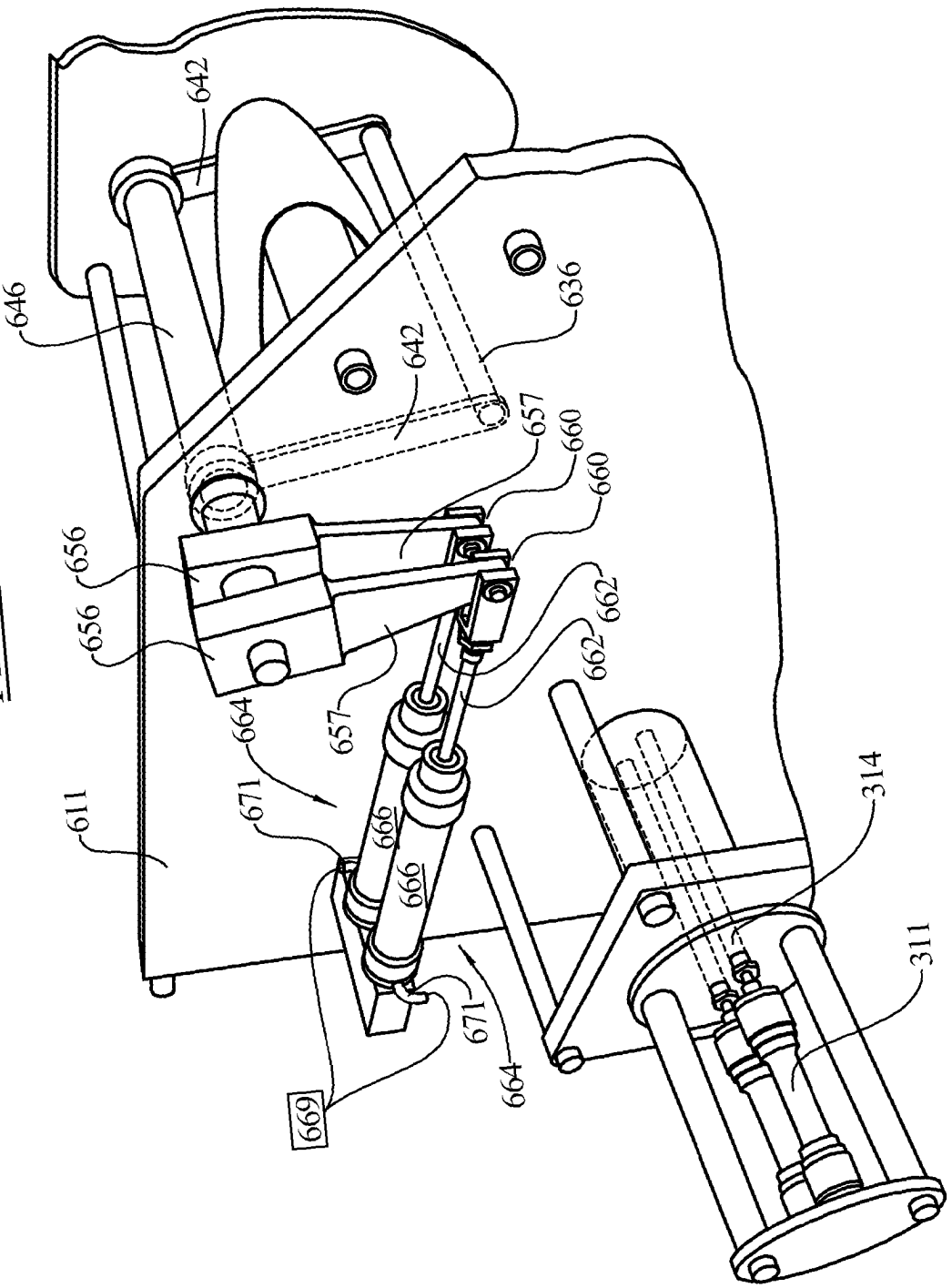
642
646
642
636
657
660
660
656
656
662
662
664
657
671
611
666
666
314
311
671
664
669

FIG. 5

FIG. 5A

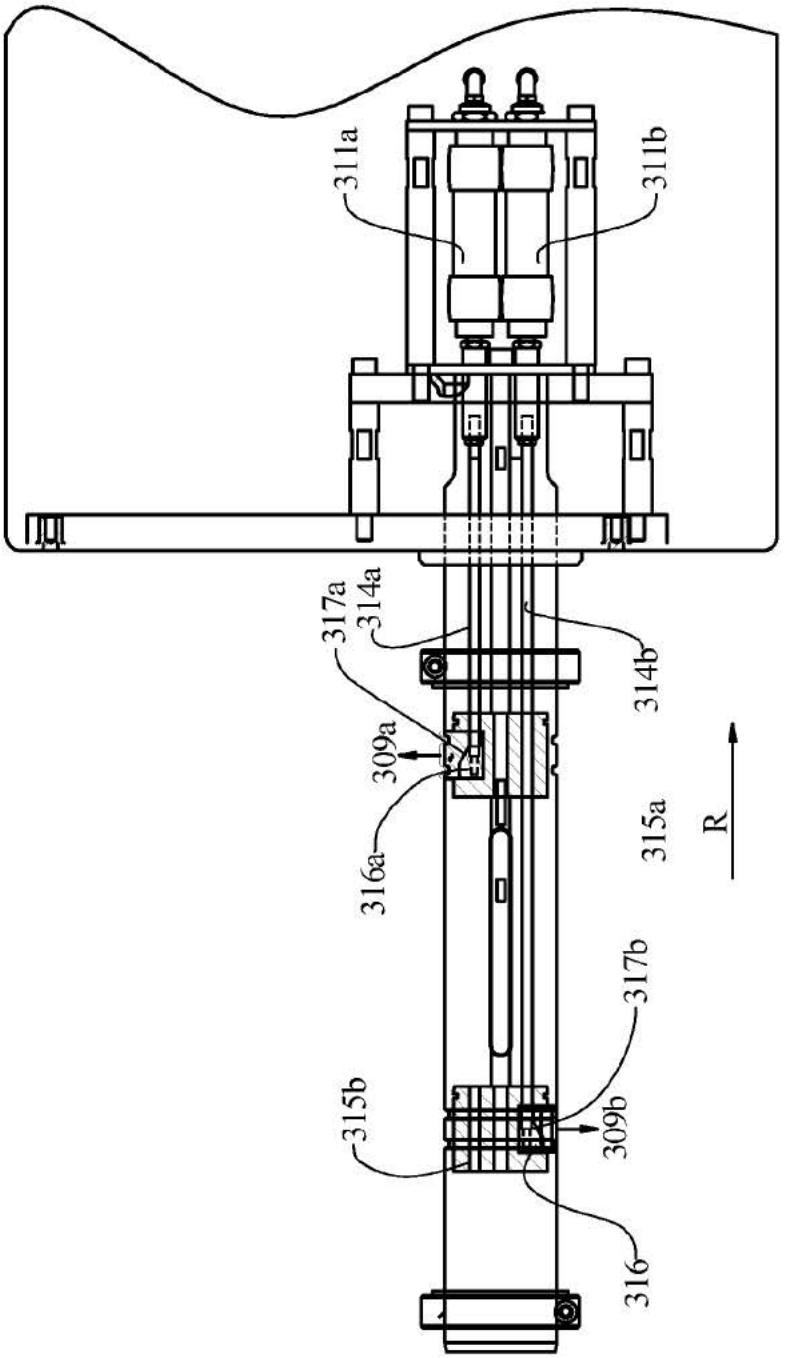

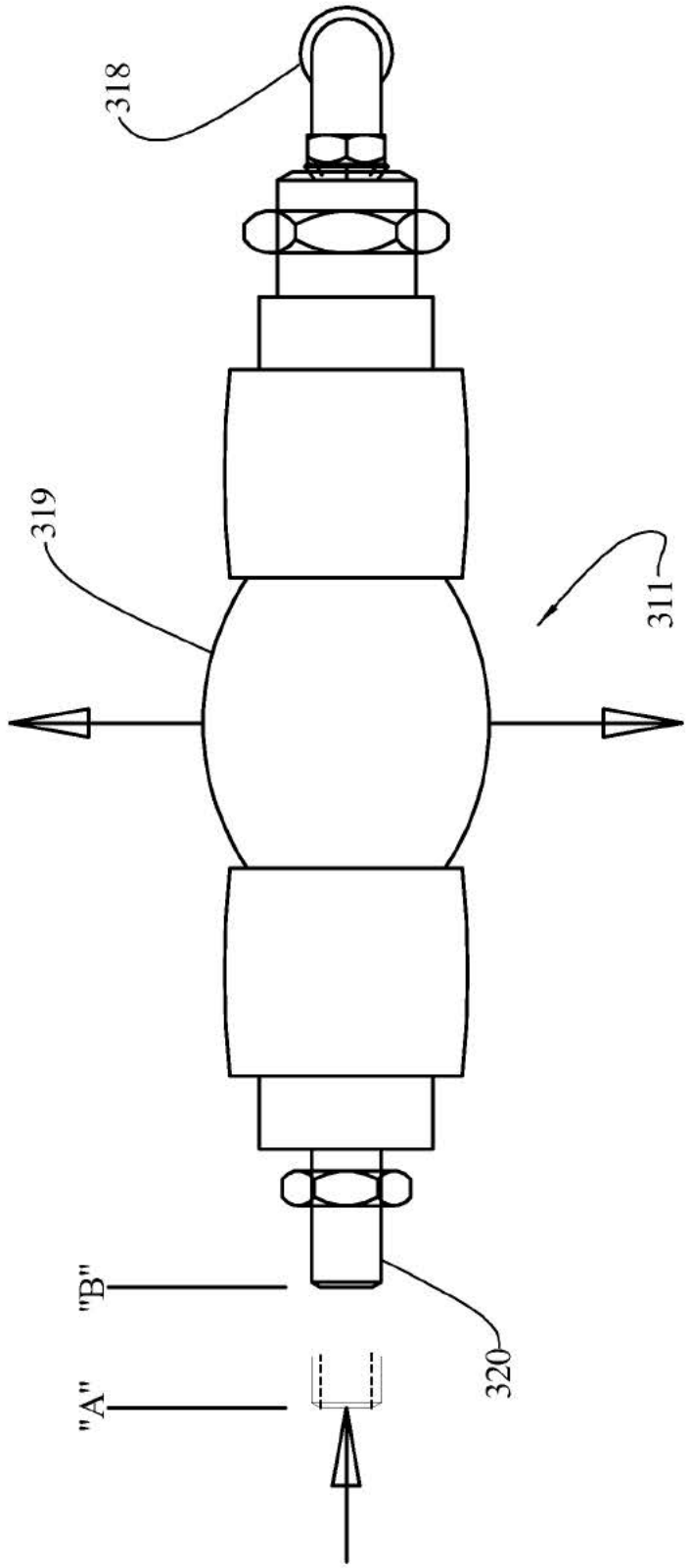

FIG. 5B

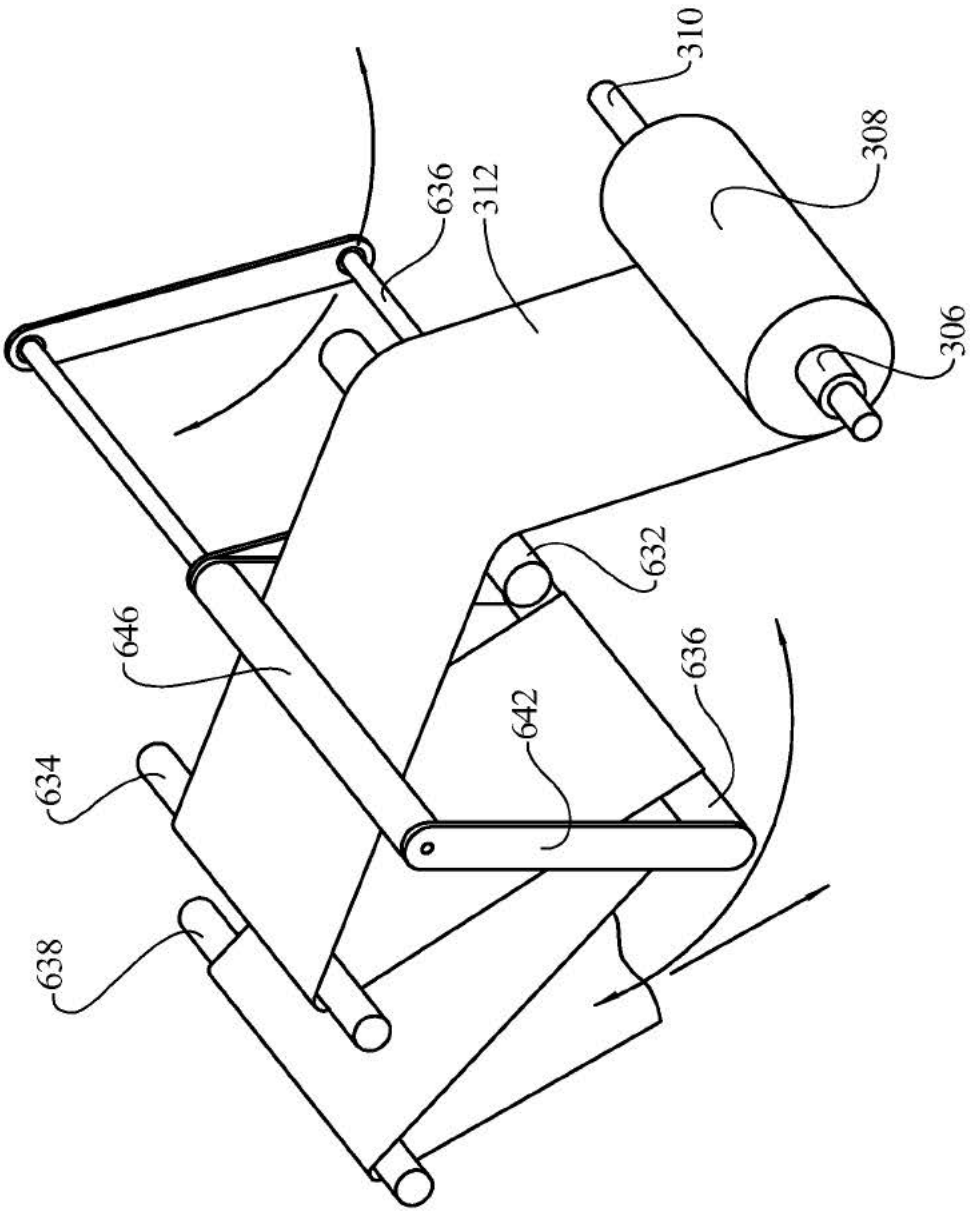

FIG. 6

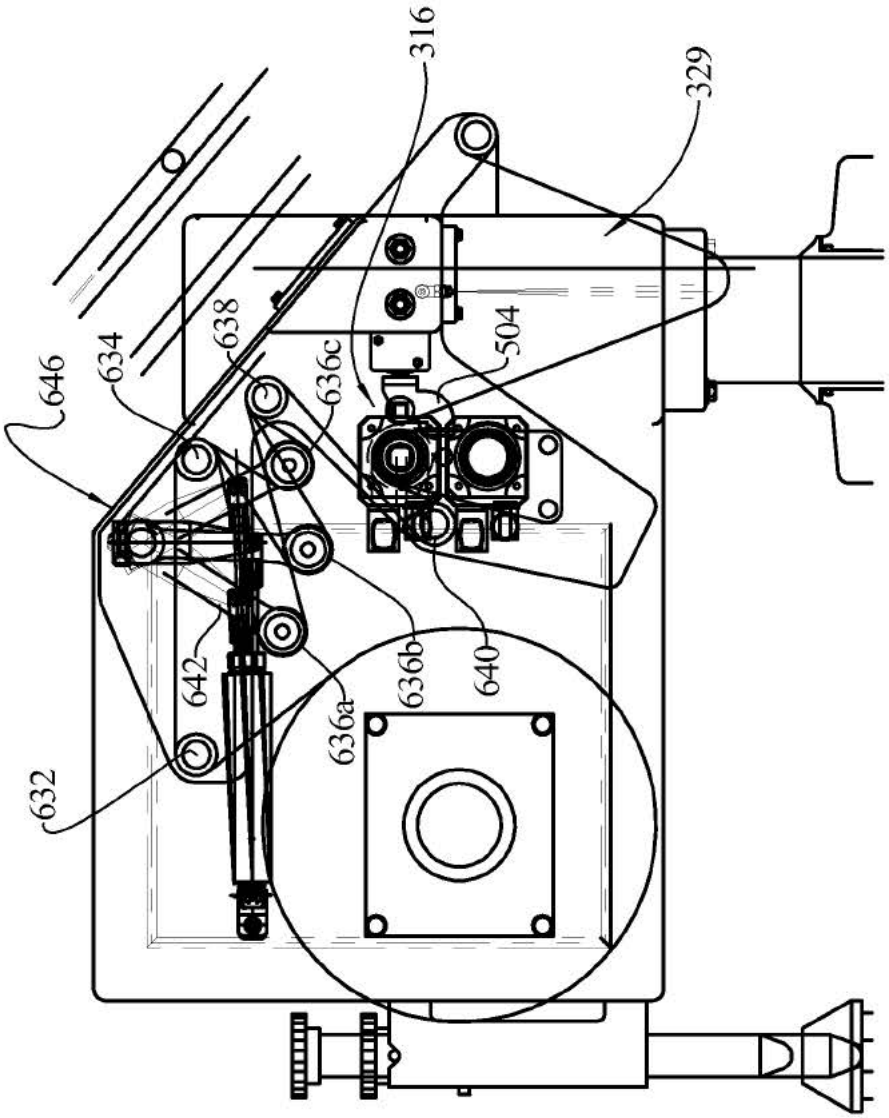

FIG. 7

FIG. 8

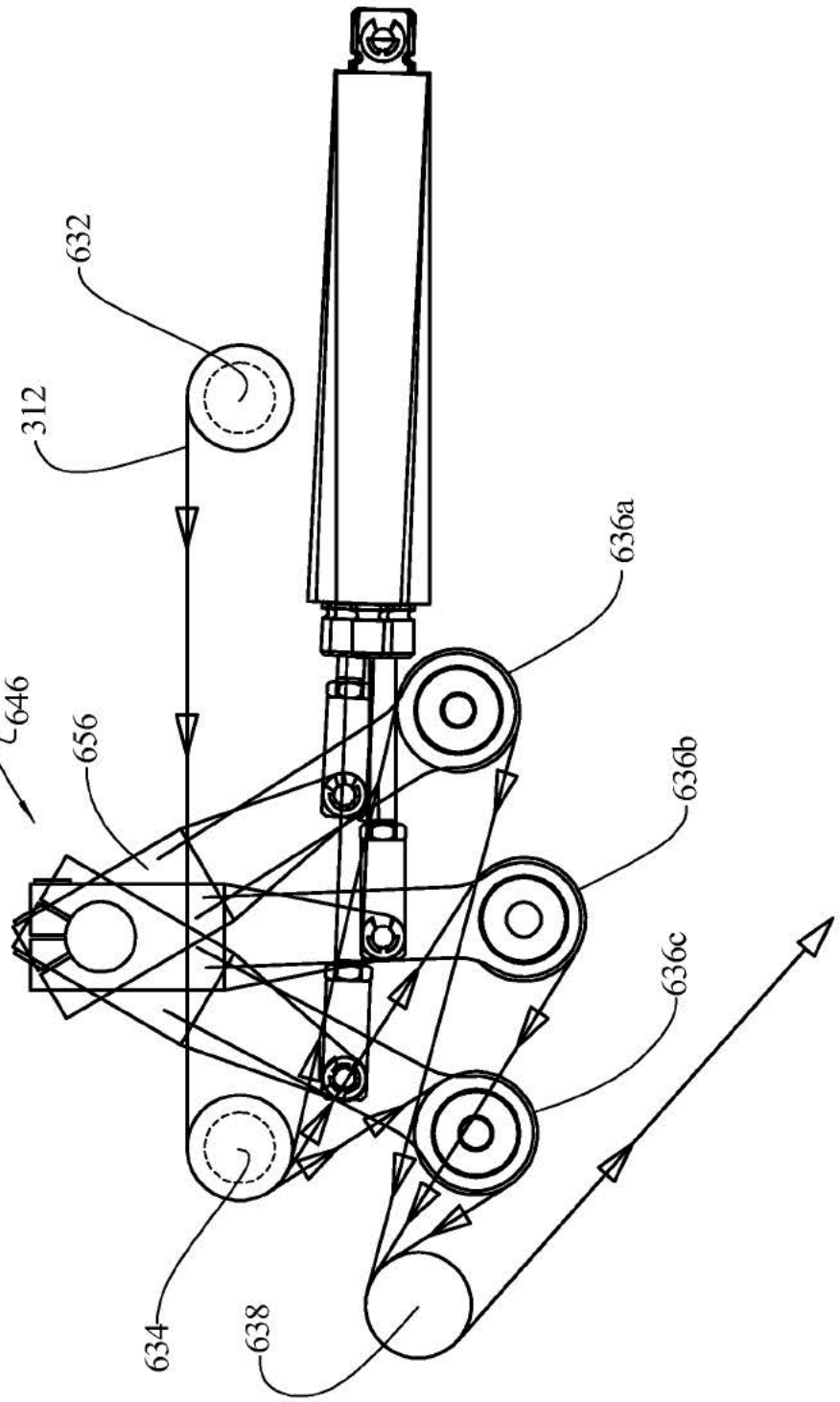

FIG. 9

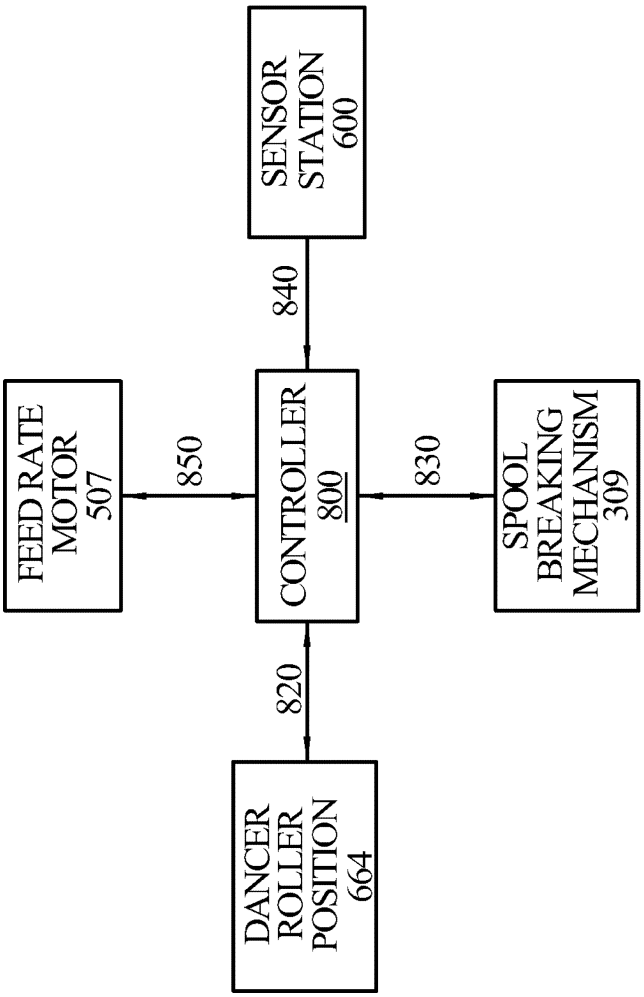
SENSOR STATION 600
840
FEED RATE MOTOR 507
850
CONTROLLER 800
830
SPOOL BREAKING MECHANISM 309
820
DANCER ROLLER POSITION 664

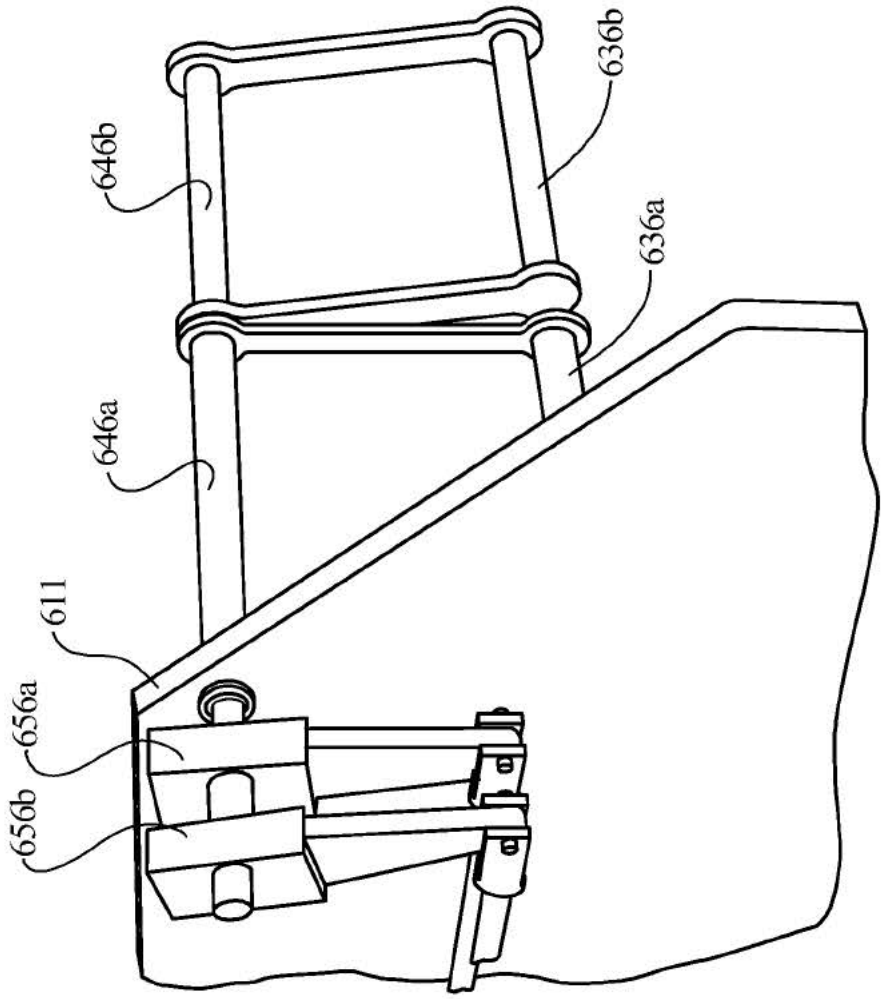

FIG. 10

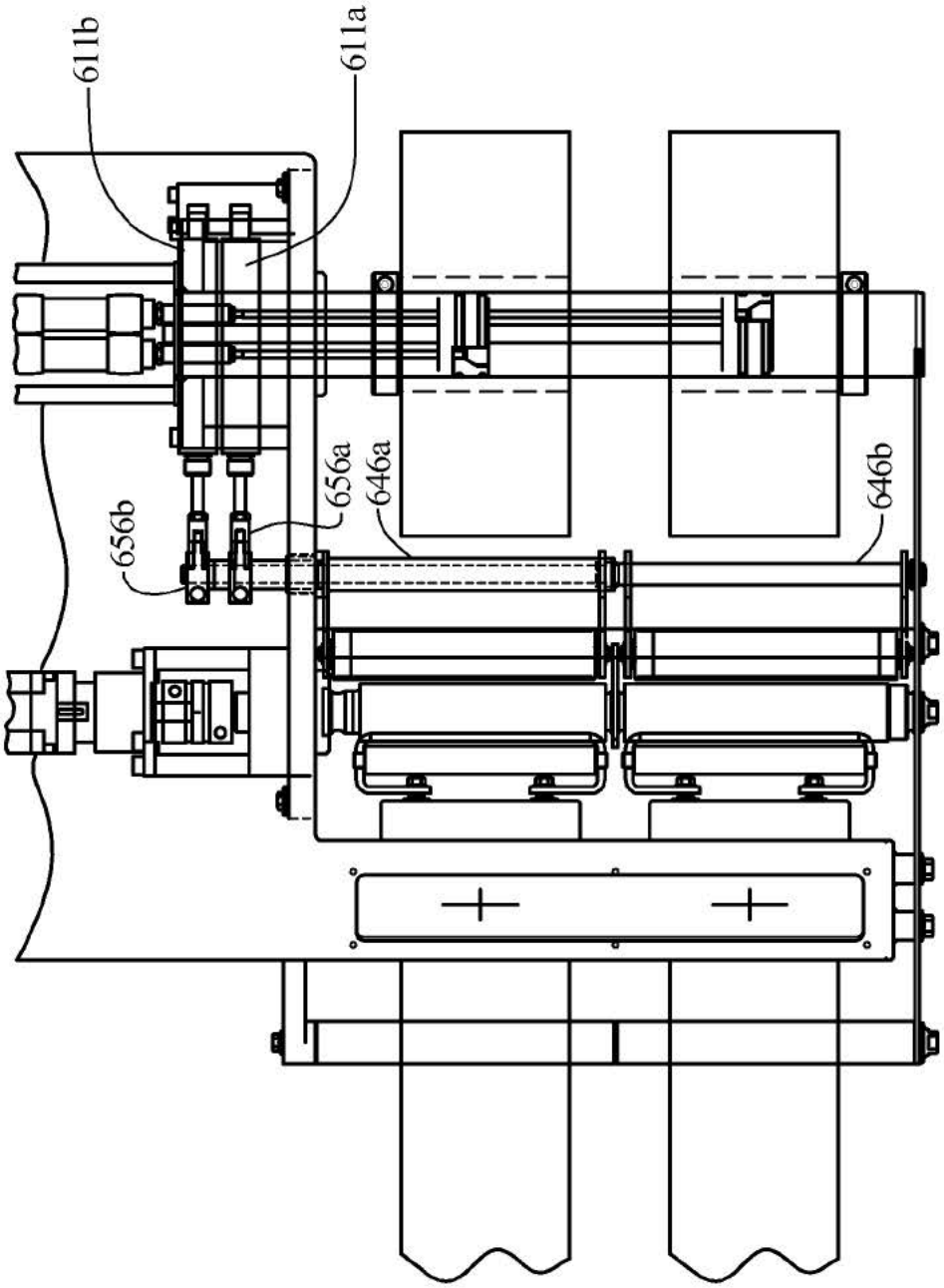

FIG. 11

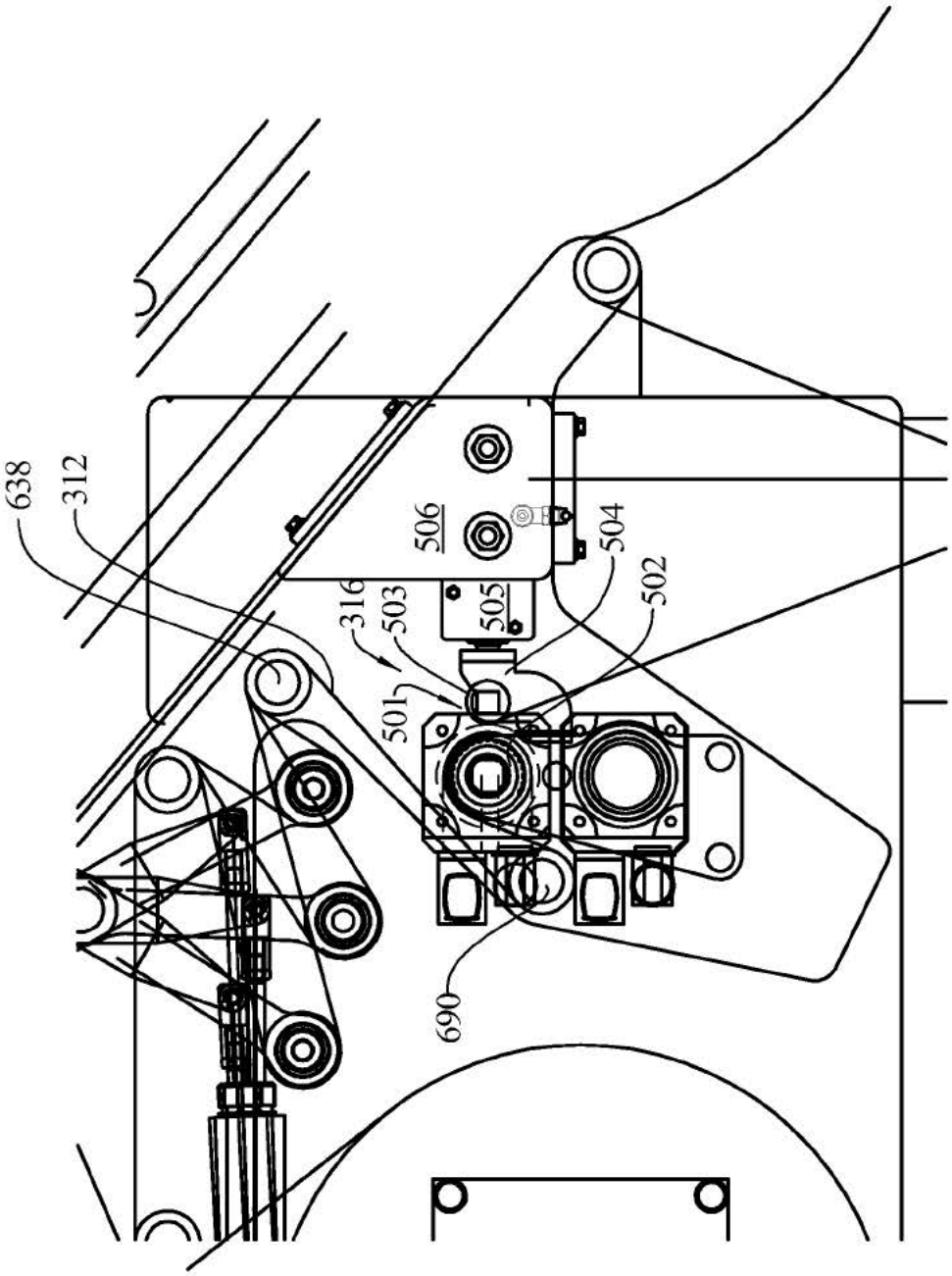

FIG. 12

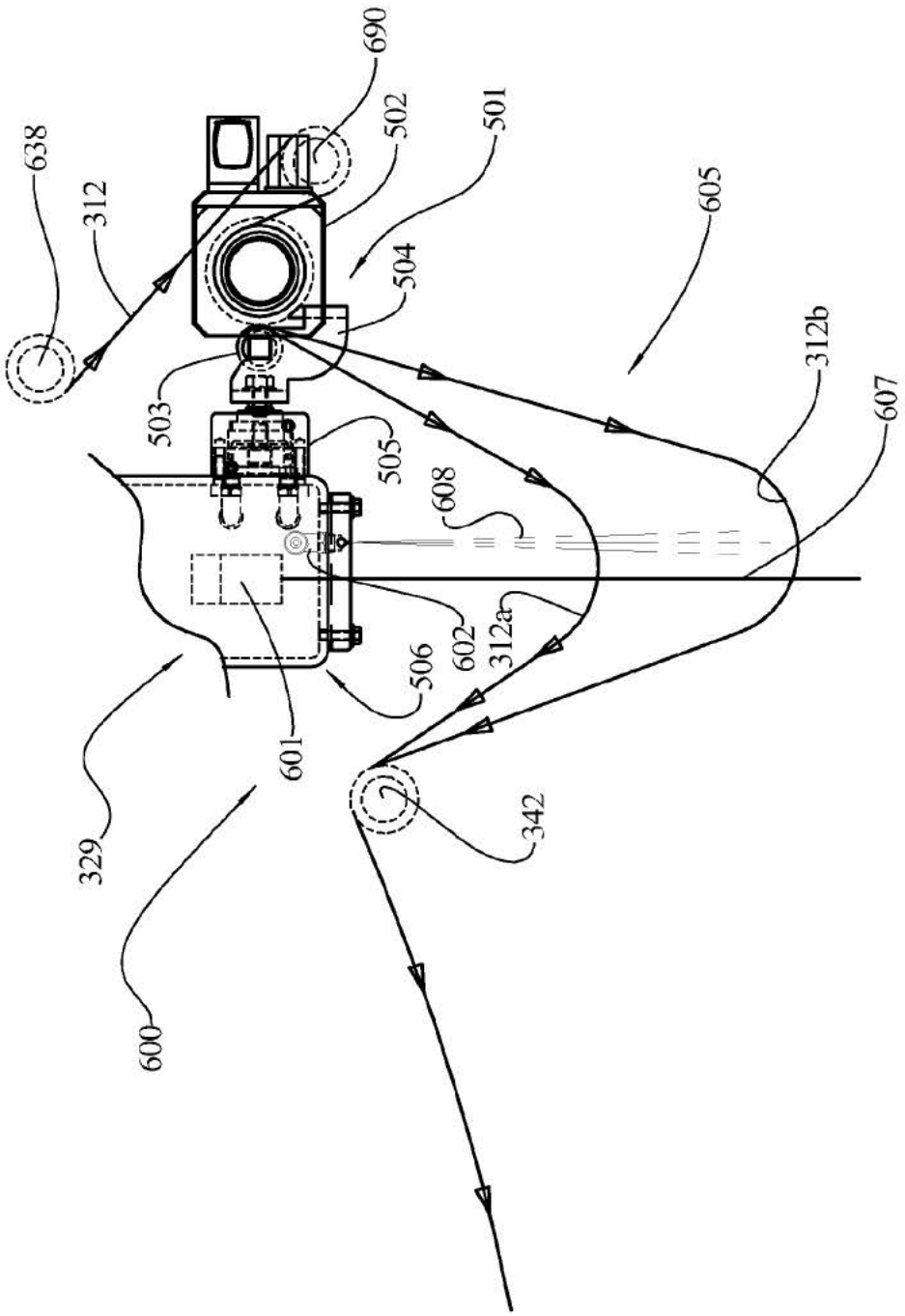
638
312
690
502
501
504
503
505
605
312b
607
608
602
312a
506
601
329
600
342

FIG. 13

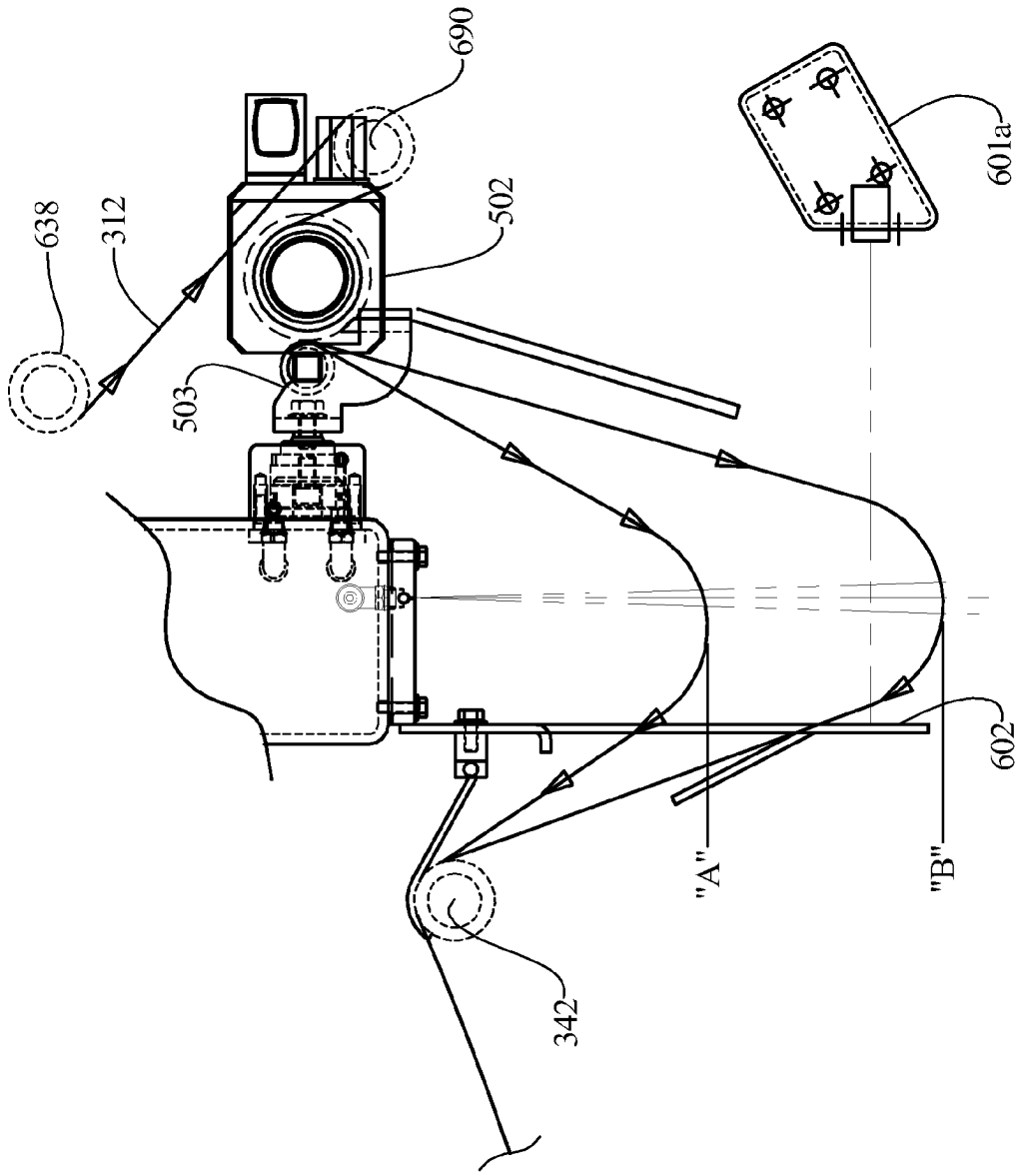

FIG. 13A

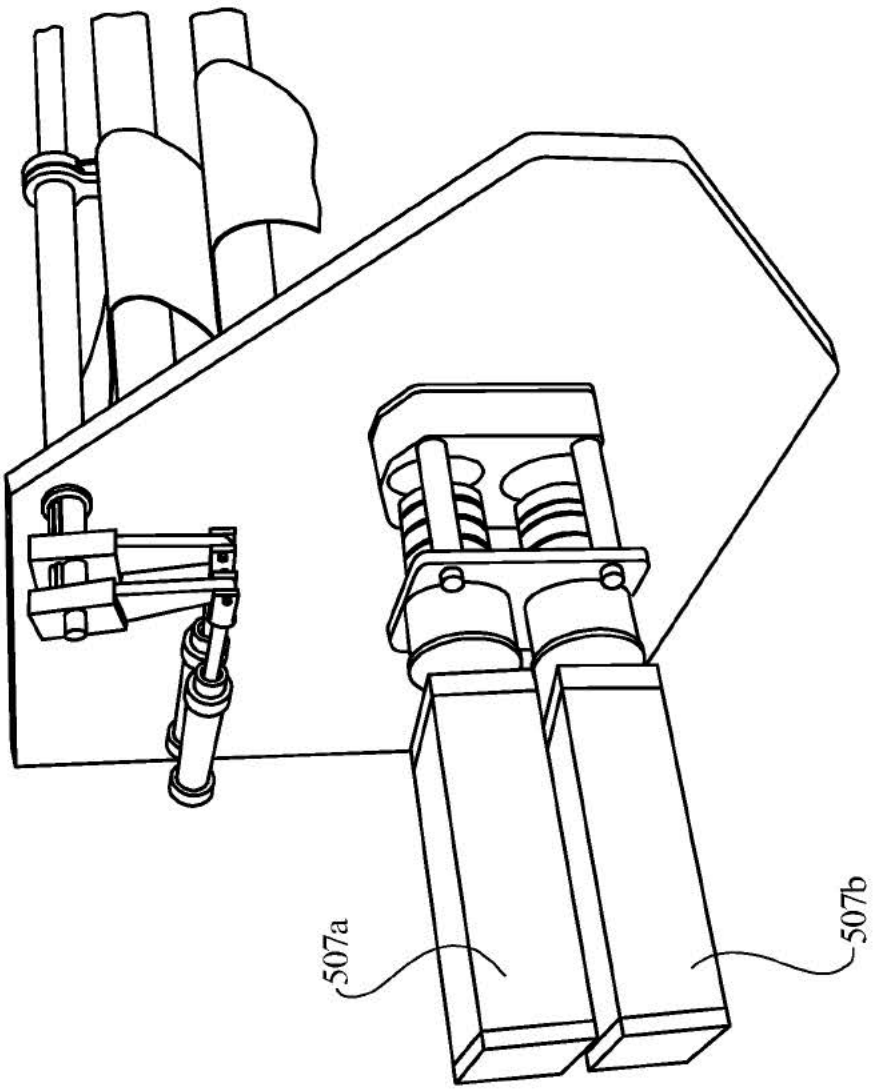

FIG. 14

FIG. 15

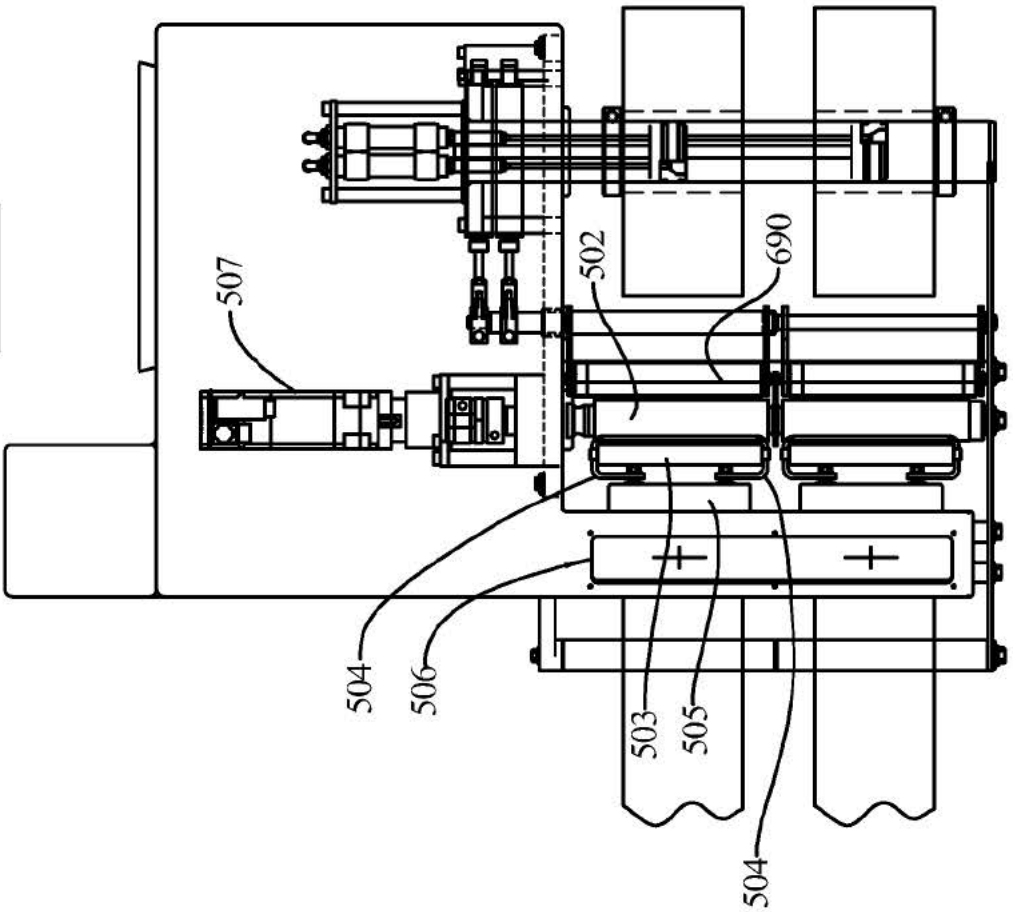

FIG. 15A

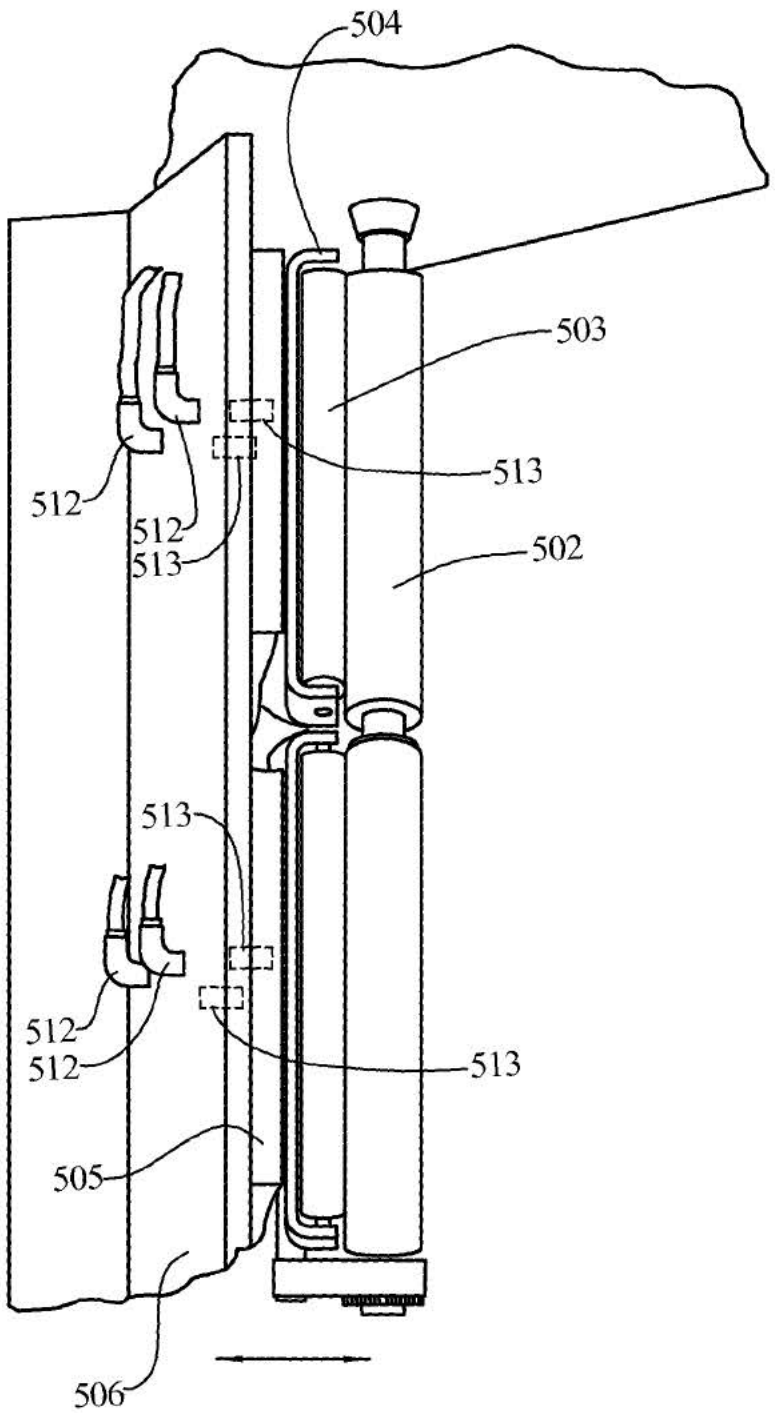

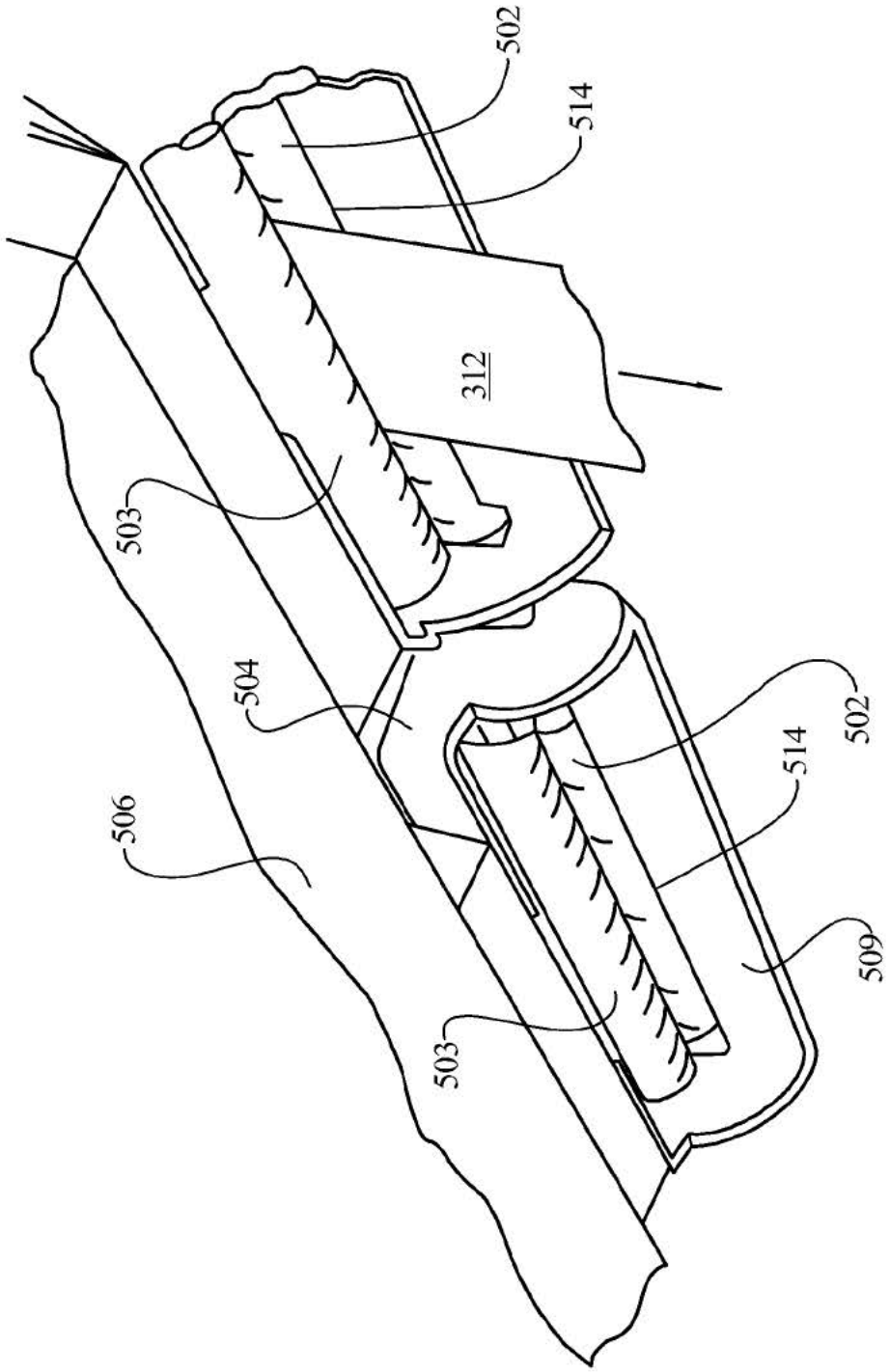

FIG. 15B

FIG. 15C

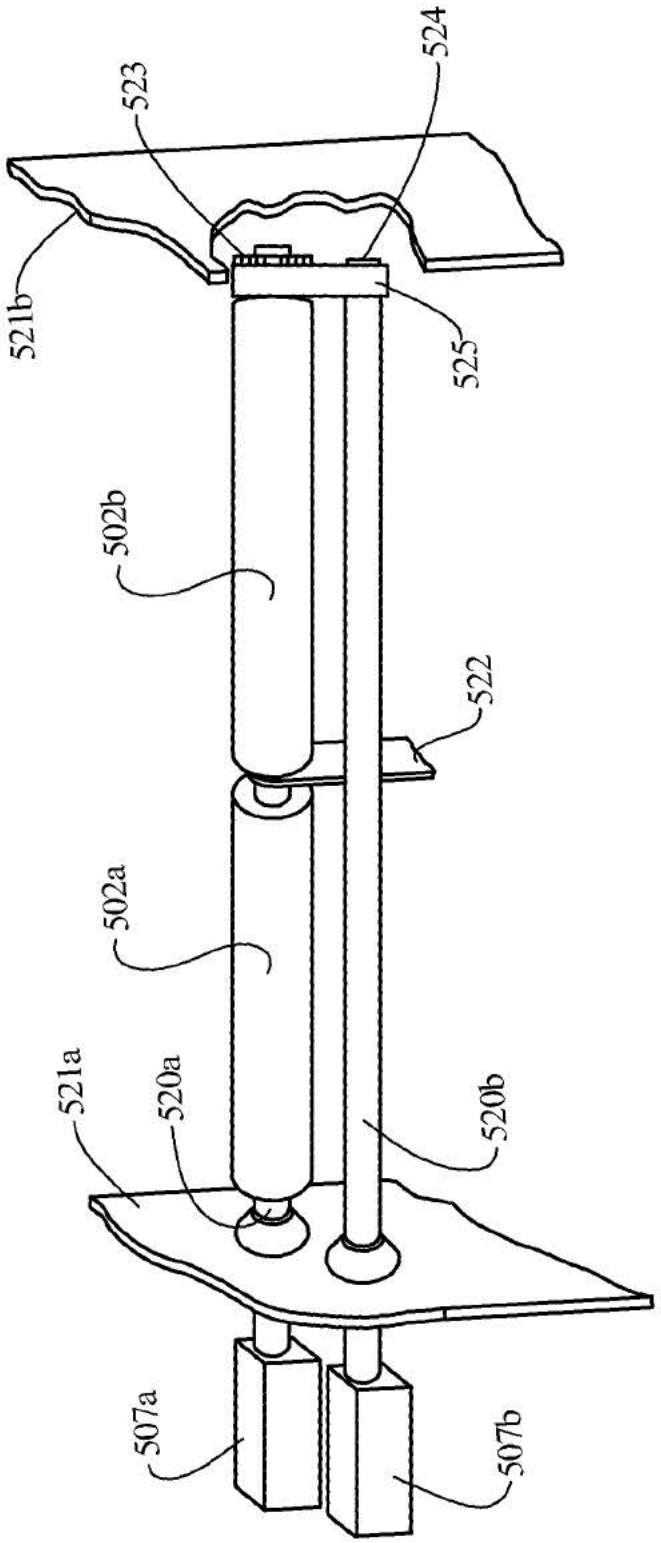

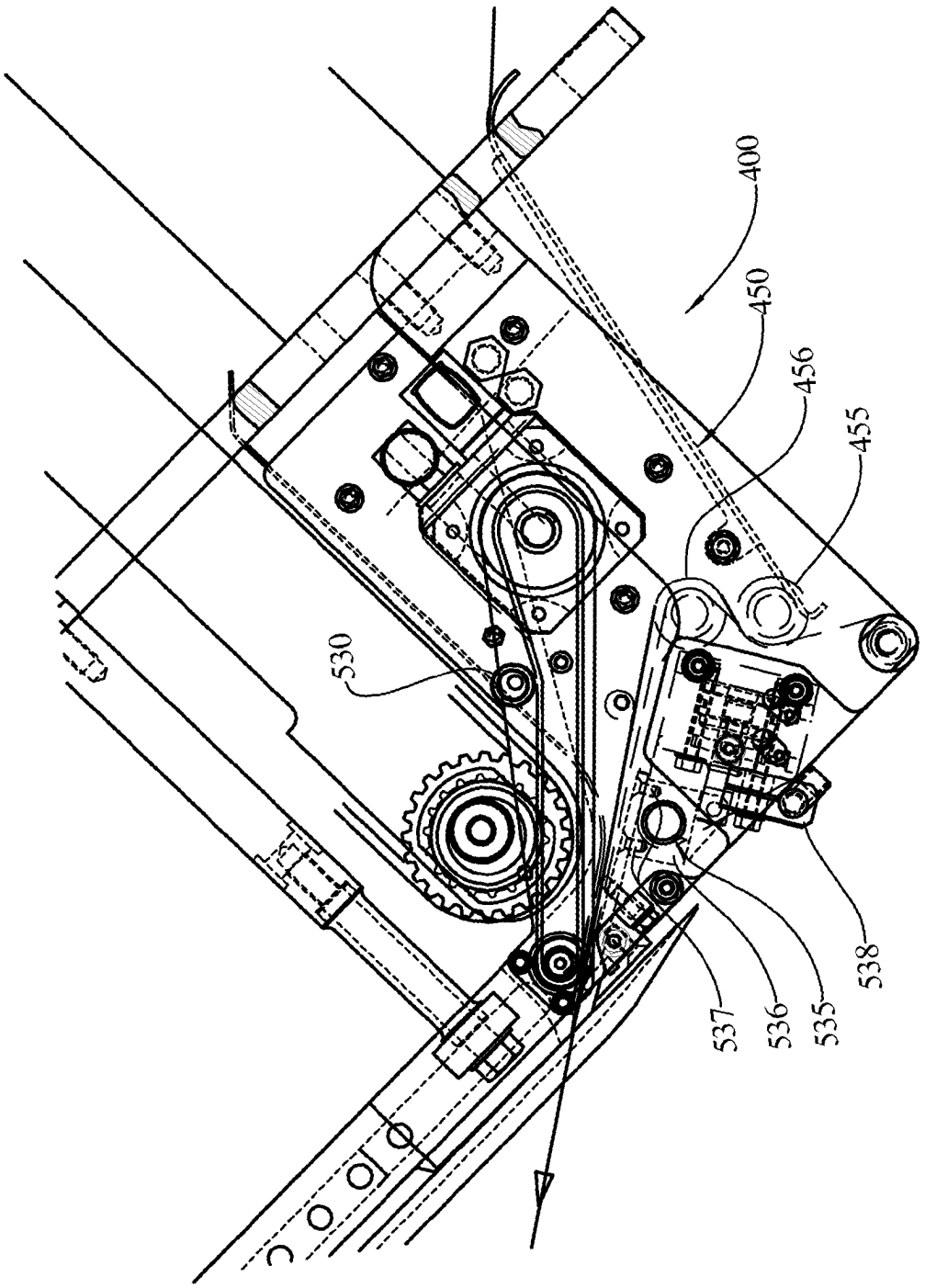

FIG. 16

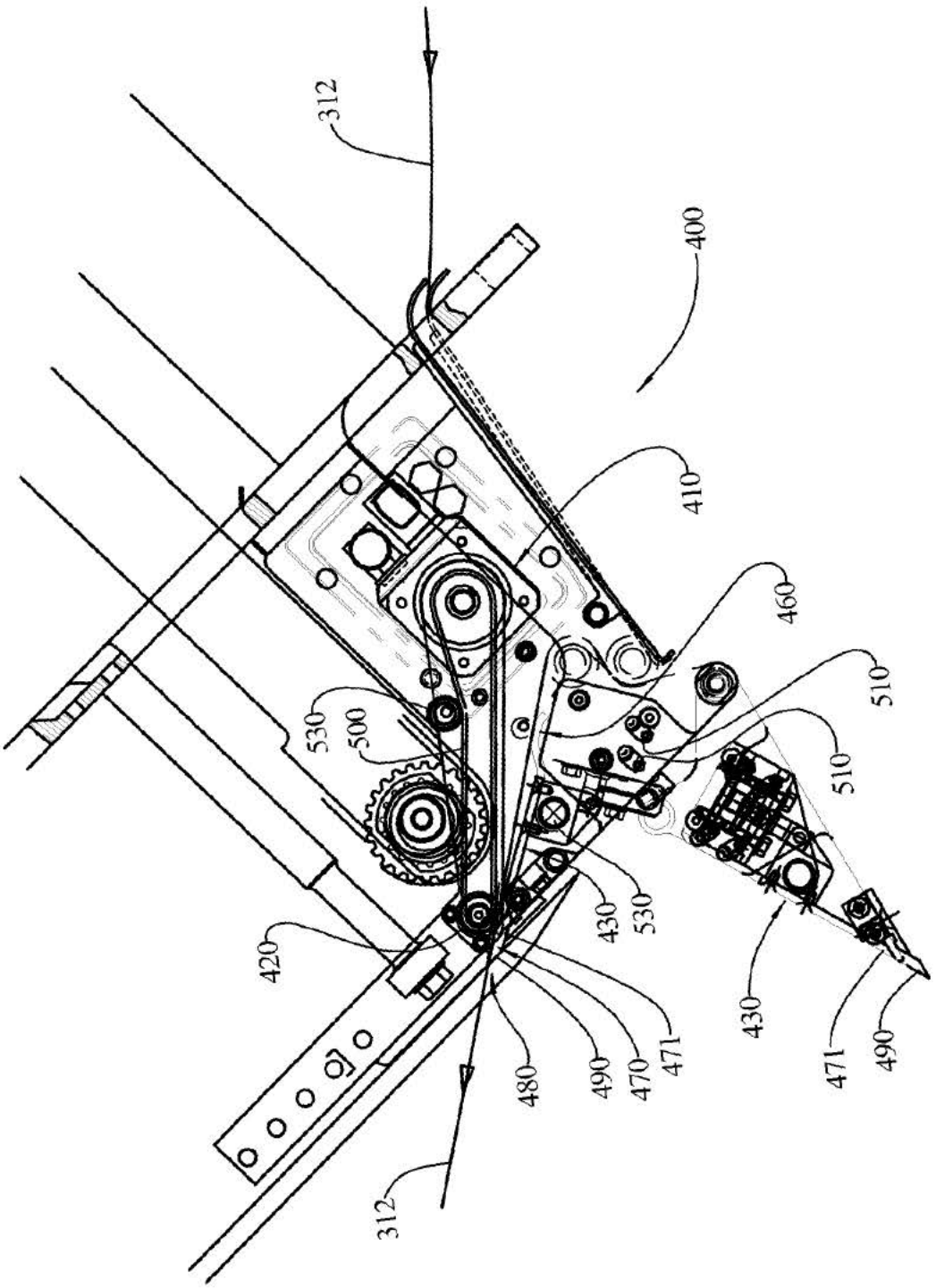
312
400
410
460
510
510
530
500
530
430
420
430
471
490
470
480
490
471
312

FIG. 17

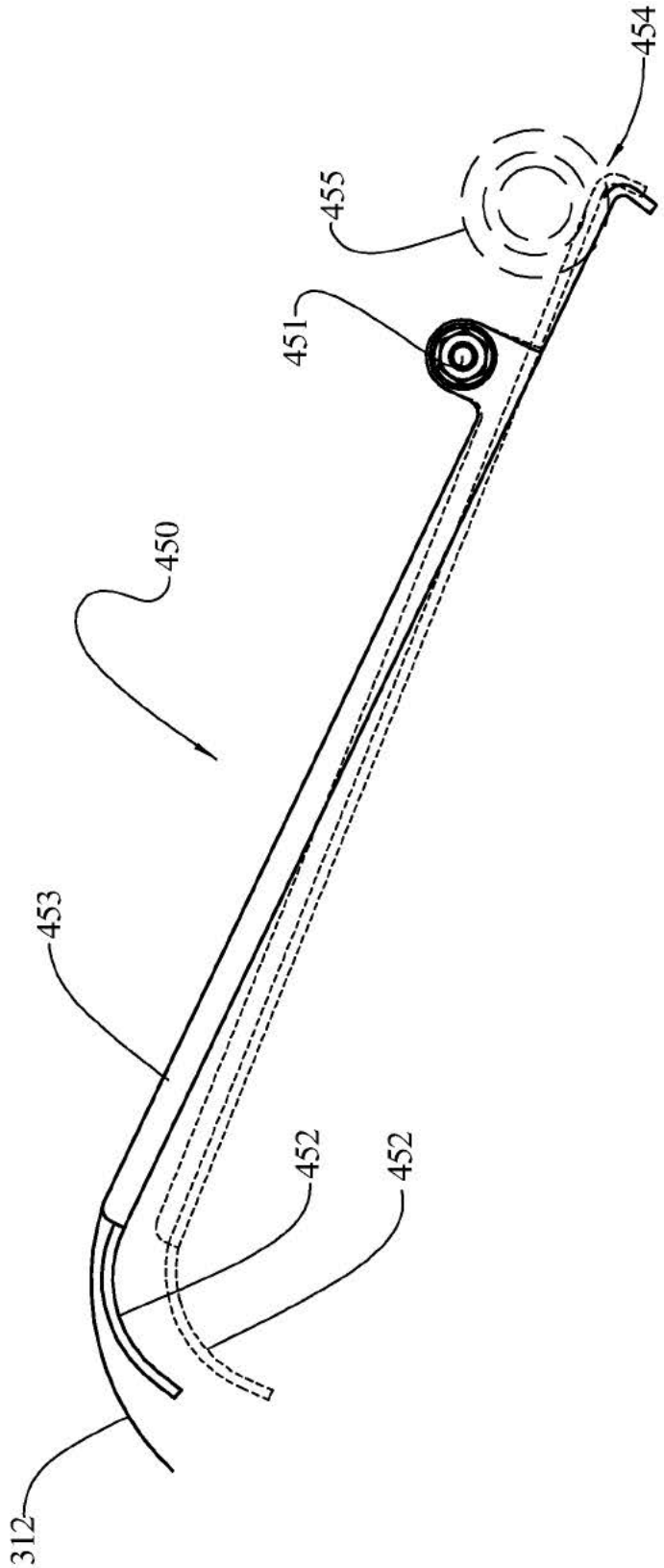

FIG. 18

FIG. 19

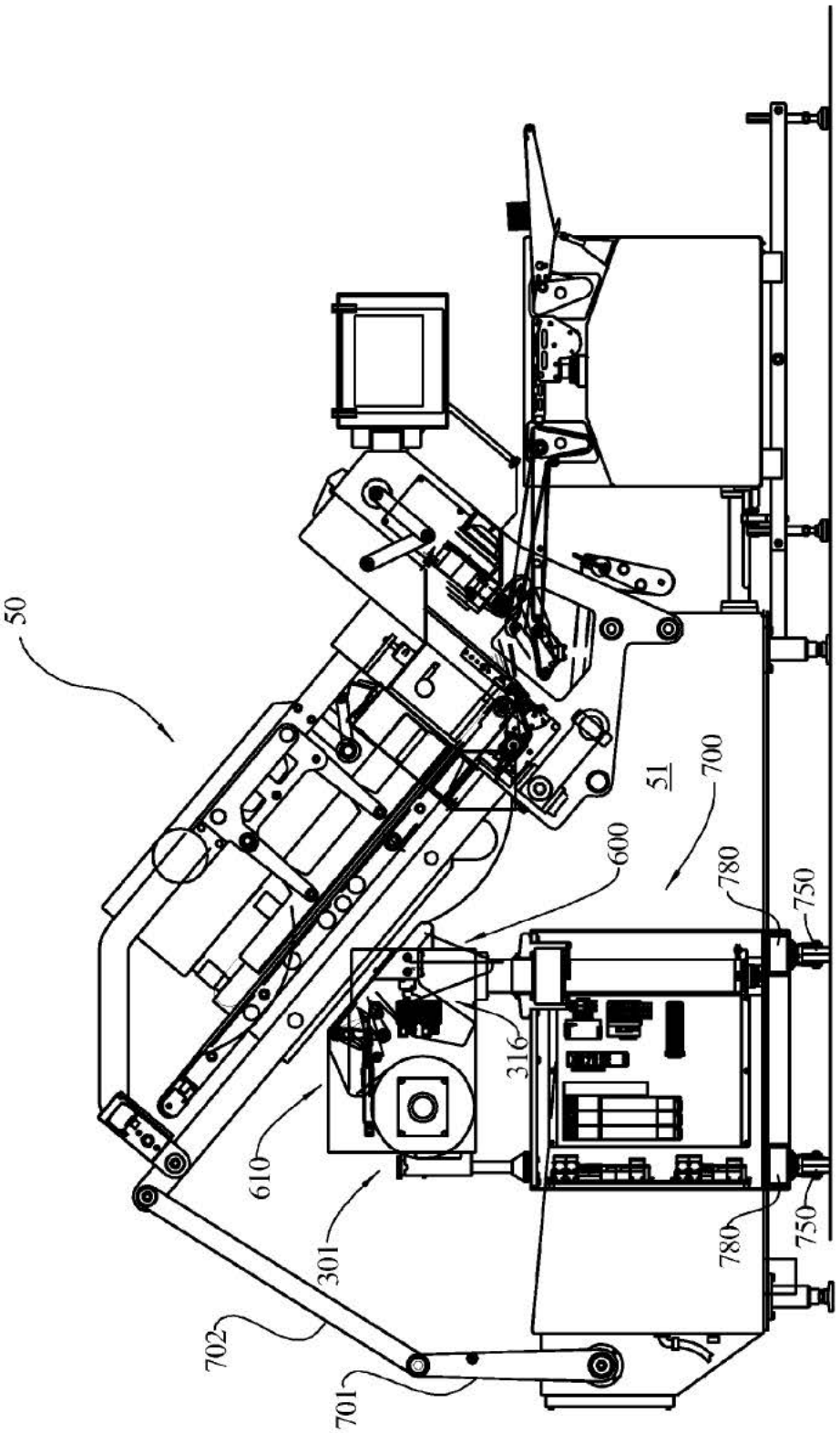

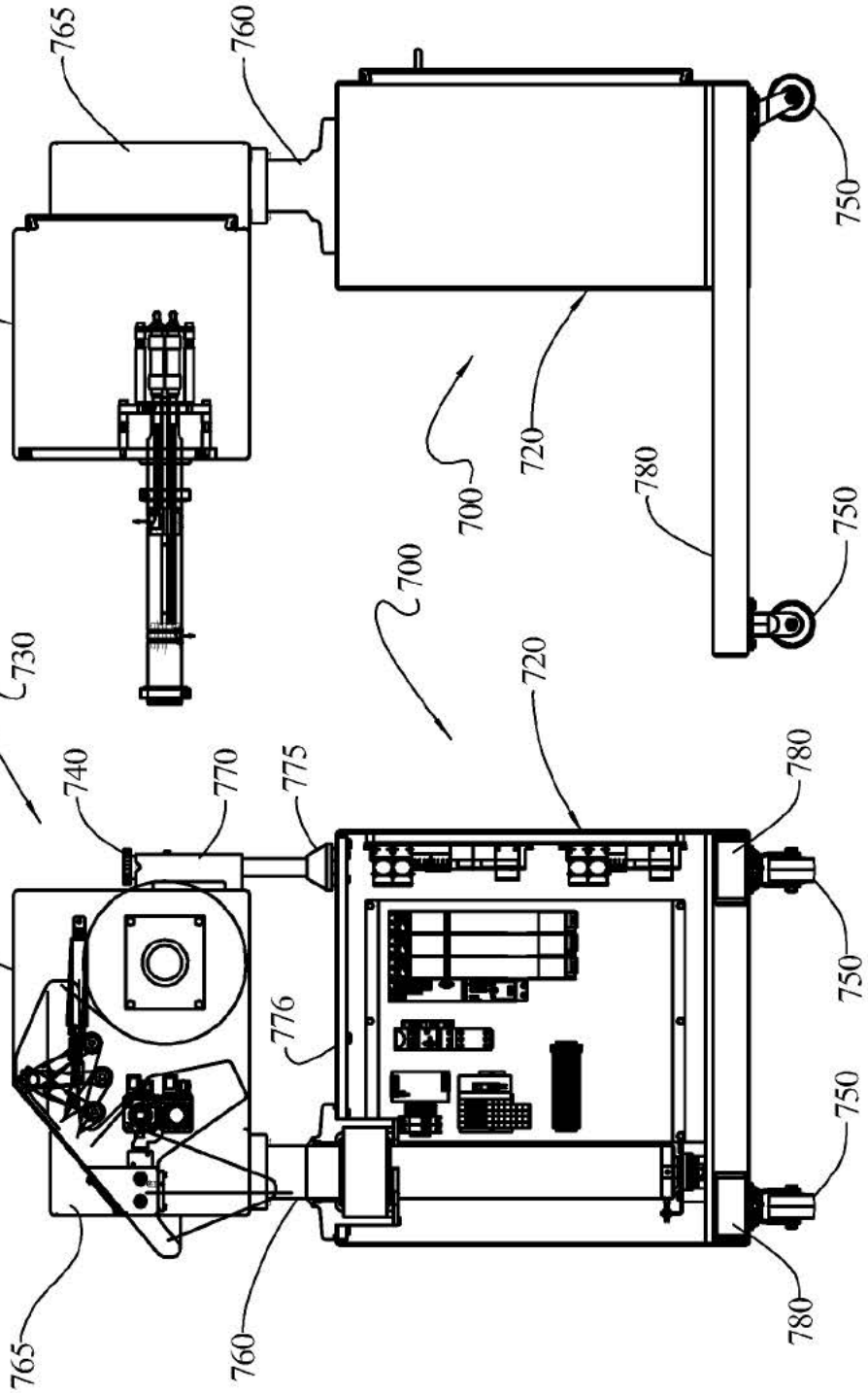
765
760
611
750
720
700
780
750
700
720
730
740
770
775
780
611
750
776
750
765
760
780

FIG. 21

FIG. 20

INTERLEAVER SYSTEM FOR HIGH SPEED SLICING MACHINE

This application claims the benefit of U.S. Provisional Application 61/375,517 filed on Aug. 20, 2010.

FIELD OF THE INVENTION

This invention relates in general to food slicing apparatus, and more particularly to the slicing of foods with interleaving sheets.

BACKGROUND OF THE INVENTION

Food loaves come in a variety of shapes (round, square, rectangular, oval, etc.), cross-sections, and lengths. Such loaves are made from various comestibles, such as meat, cheese, etc. Most loaves are provided to an intermediate processor who slices and packages the products in groups for retail.

A variety of machines have been developed to slice such loaves. Such machines include the FX 180®, FX Plus®, PowerMax3000™ and Powermax4000™ slicing machines available from Formax, Inc., of Mokena, Ill., USA. The FX 180® and the FX Plus®, PowerMax3000™ and Powermax4000™ machines are high speed food loaf slicing machines that slice one, two, or more food loaves simultaneously using one cyclically driven slicing blade. Independent loaf feed drives are provided so that slices cut from one loaf may vary in thickness from slices cut from the other loaf. The machines include a slicing station that is enclosed by a housing, except for a limited slicing opening. The slicing blade is disposed in the slicing station and a drive rotates the slicing blade at a predetermined cyclical rate on a cutting path through a slicing range that intersects the food loaves as they are fed into the slicing station.

In the foregoing machines, the food loaf slices are received in groups of predetermined weight on a receiving conveyor that is disposed adjacent the slicing blade. The receiving conveyor receives the slices as they are cut by the slicing blade. In many instances, neatly aligned stacked groups are preferred and, as such, the sliced product is stacked on the receiving conveyor before being transferred from the machine. In other instances, the groups are shingled so that a purchaser can see a part of every slice through a transparent package. In these other instances, conveyor belts of the receiving conveyor are gradually moved during the slicing process to separate the slices.

Paper interleaving mechanisms used in conjunction with cutting machines are disclosed in U.S. Pat. Nos. 6,752,056 and 4,583,435. According to these patents, slabs of product such as cheese are oriented angularly with respect to a horizontal conveyor and are fed downwardly into a slicing plane defined by a moving slicing blade. A roll of web material such as paper is arranged beneath the slab and has a length of web continuously fed toward and beneath a cut face of the slab such that when the cutting blade slices a slice from the slab the cutting blade simultaneously slices off a leading end portion of the web, forming a sheet. The sheet with the overlying slice fall to the conveyor or onto a previously cut slice already deposited onto the conveyor to form a stack. The web is continuously fed such that successive sheets are interleaved with successive cut slices.

Both of these patents described the use of air jets to assist in coupling the lead end portion of the web to the front face of the slice to be cut. Both of the patents incorporate driven rollers to dispense the web from a roll of web material.

The present inventors have recognized that it would be desirable to improve the reliability of the placement of sheets for interleaving with product slices, particularly for high-speed slicing operations. Reliability of the placement sheets for interleaving with product slices is improved using a feedback loop system to regulate the degree of tension in the interleave web with more precision.

The present inventors have recognized that the incorporation of a frictional braking system within the feedback loop system improves the control of the speed of the dispensing reel.

The present inventors have recognized the need for a more efficient arrangement of apparatus components when more than one loaf is being sliced. A coaxial arrangement for a slicing machine that slices two or more side-by-side loaves allows for the slicing machine to take up less space and provide easier access to machine components.

SUMMARY OF THE INVENTION

The present invention provides an improved web dispensing arrangement for interleaving sheets with sliced food product. The invention pertains to high speed slicing machines wherein web material is dispensed in synchronism with the slicing operation and the leading end portion of the web material is arranged on a downstream side of the cut face of the product. The remaining portion of the web material is arranged on an opposite side of the cutting plane than the leading end portion such that the slicing blade slices not only the product, but the leading end portion of the web material. The cut leading end portion of the web material forms a sheet that fronts the cut slice and both fall to a conveyor or onto a stack previously deposited on the conveyor. Thus a stack of interleaved slices and sheets can be formed and conveyed away for packaging.

According to one aspect of the invention, a sheet interleaver system is provided for a slicing machine that includes a slicing plane for slicing an elongated food product and a sheet from web material beneath the elongated product. The interleaver system includes a supply of web material, a tension control station, a drawing station, an accumulation station, a feed station, and a controller.

The drawing station has a first driver which draws the web material from the supply through the tension control station. The feed station has a second driver for receiving the web material from the drawing station via the accumulation station and drives the web material through a cutting nip into the slicing plane. The controller is in signal communication with at least one of the first driver and a sensor that determines the length of web material within the accumulation station. The supply of web material comprises a braking mechanism which is also in signal communication with the controller.

The controller is in signal communication with the first driver to maintain the length of web material within the accumulation station within a range of length, as well as with the braking mechanism to maintain the tension in the web between the supply and the drawing station to a pre-selected tension value.

A slackened supply of web material is available in the accumulation station and its length is monitored by the sensor which is in signal-communication with the controller. The speed of the first drive is adjusted to maintain the slackened length within a preselected range.

The tension control station is provided between the supply of web material and the drawing station such that tension of the web material between the drawing station and the web supply can be controlled. Tension of the web material in the

tension control station is controlled by use of a dancer roller that exerts a pre-selected force on the web throughout a range of travel of the dancer roller.

The tension control station comprises a series of rollers and the dancer roller which adjusts in position over a range of movement while providing the desired degree of tension between the web supply and the drawing station. The dancer roller is biased by a positioning mechanism which is in signal communication with the controller. The controller is also in signal communication with the braking mechanism to form a continuous feed back loop system for adjusting the position of the dancer roller and for adjusting the braking mechanism.

The braking mechanism can be a frictional braking mechanism where brake pads mounted to braking blocks are used to generate a source of friction. Braking blocks are connected to an actuating mechanism which causes braking blocks to extend and retract, thereby allowing the brake pads to come in and out of contact, respectively, with the reel of web material.

The position of the dancer roller is controlled by movement of a pair of levers which pivots about a pivot attachment. A lever arm is clamped and pinned to the pivot attachment to rotate therewith. The lever arm is ratably attached to an extendable rod of a position sensing pneumatic actuator. Controlled pneumatic pressure delivered to the actuator extends an extending force on the actuator rod, which in turn moves the lever arm. Movement of the lever arm causes the pivot attachment, and accordingly the dancer roller, to move. The constant force form the actuator causes a the dancer roller to provide a constant tension on the web.

The feed station can comprise a drive roller and a nip plate device with the web material fed therebetween. The drive roller rotates to drive an extended end portion of the web material through a cutting nip. An upper frame member rotatably mounts the drive roller. A lower frame member mounts the nip plate device. The lower frame member is pivotally mounted to the upper frame member. Pivoting the lower frame member away from the upper frame member opens the cutting nip and the space between the drive roller and the nip plate device to allow the web material to be threaded between the drive roller and the nip plate device, and through the cutting nip.

The drive roller is driven by a servomotor. The servomotor drives the web material in a closely controlled and precise manner. The servomotor can be controlled to interleave a sheet between every cut slice or only interleave sheets between some cut slices but not others, such as between every other cut slice. Alternatively, the servomotor can be controlled to interleave a sheet between every cut slice for a number of slices and then change to interleave sheets less frequently, such as allowing a group of slices to be accumulated without sheets and then interleaving the next group of slices with sheets. The servomotor and associated control allows a great flexibility on the pre-programmed selection of interleaving slices without manual intervention.

As a further aspect of the invention a pressurized air dispenser is provided that is configured to direct an air stream onto a side of the slackened length to maintain a tension on the slackened length of web material in the accumulation station.

According to another aspect of the invention, in slicing machines where side-by side loaves of food product are processed, actuating mechanisms can be arranged coaxially to allow for a more efficient use of space.

Numerous other advantages and features of the present invention will become readily apparent from the following detailed description of the invention and the embodiments thereof, from the claims and from the accompanying drawings.

BRIEF DESCRIPTION OF THE DRAWINGS

FIG. **1** is a side view of a high-speed slicing apparatus suitable for incorporation of the sheet interleaving mechanism of the present invention

FIG. **2** is an opposite side view of the high-speed slicing apparatus of FIG. **1**, incorporating the sheet interleaving mechanism of the present invention.

FIG. **3** is a perspective view of one embodiment of the braking mechanism and spool.

FIG. **4** is a top view of one embodiment of the braking mechanism.

FIG. **5** is a perspective view of the actuators for the braking mechanism and the dancer assembly.

FIG. **5**A is an enlarged top view of one embodiment of the braking mechanism.

FIG. **5**B is a side view of the actuator for the braking mechanism.

FIG. **6** is a perspective view of the web material threaded through the tension control station.

FIG. **7** is a side view of the web supply, the tension control station, and the drawing station.

FIG. **8** illustrates the range of motion of the dancer assembly.

FIG. **9** illustrates one embodiment of a feedback loop system for use with the interleaving mechanism.

FIG. **10** is a perspective view of the dancer assembly.

FIG. **11** is a top view of the dancer assembly.

FIG. **12** is a side view of the drawing station.

FIG. **13** is a side view of the sensor station.

FIG. **13**A is an alternate embodiment of accumulation station

FIG. **14** is a perspective view of motors which drive the rollers in the drawing station.

FIG. **15** is a top view of the drawing station.

FIG. **15**A is a top perspective view of the drawing station rollers.

FIG. **15**B is a bottom perspective view of the drawing station rollers.

FIG. **15**C is a perspective view of motors for driving the drawing station rollers.

FIG. **16** is a side view of the feed station.

FIG. **17** is a side view of the feed station illustrating the feed station in both its open and closed positions.

FIG. **18** is an enlarged view of the guide plate.

FIG. **19** is a side view of a high-speed slicing apparatus incorporating the sheet interleaving mechanism of the present invention.

FIG. **20** is a side view of the moveable frame assembly.

FIG. **21** is a front view of the moveable frame assembly.

DETAILED DESCRIPTION OF THE PREFERRED EMBODIMENT

While this invention is susceptible of embodiment in many different forms, there are shown in the drawings, and will be described herein in detail, specific embodiments thereof with the understanding that the present disclosure is to be considered as an exemplification of the principles of the invention and is not intended to limit the invention to the specific embodiments illustrated.

FIG. **1** illustrates one embodiment of a food loaf slicing machine **50** that may incorporate the sheet interleaver of the present invention. The slicing machine can be a high speed slicing machine such as disclosed in U.S. Pat. Nos. 6,484,615; 5,628,237; 5,649,463; 5,704,265; 5,724,874; and U.S. Published Patent Application US 2009/0188363 A1, all herein

incorporated by reference, to the extent that the references are not contrary to the present specification, or as commercially available as a FX 180®, FX Plus®, PowerMax3000™ and Powermax4000™ slicing machine and/or system available from Formax, Inc. of Mokena, Ill., USA.

The slicing apparatus **50** includes a base section **104**, a collapsible frame **105**, an automatic food article loading apparatus **108** that receives food articles to-be-sliced, a food article feed apparatus **120**, a food article feed elevation adjusting apparatus **121**, a laser safety guard system **123**, and a slicing head apparatus **124**. The slicing apparatus also includes a computer display touch screen **131** that is pivotally mounted on and supported by a support **132**.

The base section **104** includes a compartment **136** having side walls **138***a*, a bottom wall **140**, and an inclined top wall **142**. The apparatus **100** is supported on four adjustable feet **144**. The compartment **136** has a tapered side profile from back to front wherein the top wall **142** slants down from back to front. The slanted orientation of the top wall **142** ensures water drainage off the top of the compartment **136**.

The compartment **136** includes near side doors **152**,**154**, far side doors, and a rear door that permit access into the compartment or to modules normally within the compartment **136**. The compartment **136** typically affords an enclosure for a computer, motor control equipment, a low voltage supply, and a high voltage supply and other mechanisms as described below. The compartment may also include a pneumatic supply or a hydraulic supply, or both (not shown).

The slicing machine **50** includes a stacking conveyor or jump conveyor **130** (FIG. **2**) beneath the slicing head apparatus **124**, particularly beneath a rotating slicing blade **100**. The slicing machine may include an output conveyor/classifier system **102** which receives and transports stacks of slices from the stacking conveyor **130**.

FIG. **2** illustrates one embodiment of the sheet interleave system **300** of the present invention. For purposes of description, a single sheet interleaving system is described for a slicing machine set up for slicing only one loaf. It should be understood that for a slicing machine that slices two or more side-by-side loaves, multiple sheet interleaving apparatuses **300** can be provided in a corresponding side-by-side arrangement. The sheet interleaving system **300** comprises a web material supply **301**, a tension control station **610**, a drawing station **316**, a web accumulation station **329** and a feed station **330**.

The web material supply **301** may be a spool **306** for dispensing web material **312** from a roll **308** as shown in FIG. **3**. The spool **306** is supported on a cylindrical shaft **310** that allows the roll **308** to revolve about the shaft **310** to dispense web material **312** (FIGS. **2** and **3**). Braking mechanisms **309** are disposed within the shaft **310**. The web material **312** extends from the roll **308** and is threaded through a tension control station **610** and then to a drawing station **316**. A non-contact sensor, such as an ultrasonic or optical sensor can be used to sense the diameter of the roll **308** and communicates a signal when the roll is depleted, or when the diameter of the roll falls below a pre-selected value.

FIG. **4** illustrates a top view of the interleaver system with two rolls **308***a*, **308***b* of material supply. The rolls **308***a*, **308***b* are each on a spool **306***a*, **306***b* supported along the shaft **310** that is in the form of a common cylindrical shaft. Braking mechanisms **309***a*, **309***b* are used to adjust the speed at which web material **312** is dispensed.

Braking mechanism **309** may be a disk, pins, or any other mechanism which can extend from the shaft **310** to generate a frictional force between the cylindrical shaft **310** and the spool **306**. In its resting position, the braking mechanism **309** does not protrude beyond the surface of the cylindrical shaft. In its activated position, the braking mechanism **309** extends beyond the cylindrical shaft to a degree which provides the desired amount of frictional force against the spool **306**.

Braking mechanisms **309** are activated using an actuator **311** which is connected to an actuating arm **314**. Actuating arm **314** is disposed within the cylindrical shaft **310** (FIG. **5**). In operation, as illustrated in FIG. **4**, two actuators **311***a*, **311***b* are used to control each of the breaking mechanisms **309***a*, **309***b* to adjust the dispensing rate of rolls **308***a*, **308***b* respectively. The actuators **311***a*, **311***b* are disposed on the same side of the slicing machine. Control for both rolls is made possible by disposing both actuating arms **314***a*, **314***b* within the cylindrical shaft. The first actuating arm **314***a* extends to reach the first braking mechanism **309***a*. The second actuating arm **314***b* extends past the first braking mechanism **309***a* to reach the second braking mechanism **309***b*. A controller signals to the actuator to expand or contract to activate or withdraw, respectively, the braking mechanism. An extension of the actuating arm can be used to cause the braking mechanism **309** to protrude from the cylindrical shaft **310**.

In one embodiment, as illustrated in FIG. **5**A, braking mechanism **309** is a brake pad **309***a*, **309***b*. Actuating arms **314***a*, **314***b* extend and terminate at braking blocks **315***a*, **315***b* respectively. Braking blocks comprise action blocks **316***a*, **316***b*, and brake pads **309***a*, **309***b*. Action blocks **316***a*, **316***b* are shaped with an inclined surface **317***a*, **317***b* such that brake pads **309***a*, **309***b*, with a complementary shaped surface, can slide over the inclined surface **317***a*, **317***b*. When the actuating arms **314***a*, **314***b* contract, the actuating arms retract in a direction R, pulling the action blocks **316***a*, **316***b* in the same direction. The movement of the action blocks pushes the brake pads outward to generate a frictional braking force which creates drag to stop the roll completely, or causes the roll to pay out the film at a slower pace. Movement of the actuating arms is controlled by the actuator **311**, illustrated in FIG. **5**B. The actuator **311** comprises a bladder **319**, an air pressure inlet **318**, and a threaded shaft **320**. The threaded shaft **320** extends from one end of the bladder **319** and is connected to the actuating rods. The air pressure inlet **318** is disposed on the opposite end of the bladder. As air pressure is increased, the bladder expands vertically or contracts to pull the threaded shaft from point "A" to point "B" proportional to the amount of air pressure applied. The actuator can be FLUIDIC MUSCLE DMSP, MAS such as those available from Festo Corporation in Hauppauge, N.Y.

The web material **312** extends from the roll **308** and is threaded through a tension control station **610** as illustrated in FIGS. **2** and **6**. The station **610** includes a housing or frame **611**. The web material **312** is first threaded across a first fixed upper idle roller **632** and a second fixed upper idle roller **634** (FIGS. **6** and **7**). The web material **312** is then directed downward to wrap a dancer roller **636** and then directed upward to wrap a first lower fixed idle roller **638**. The web material **312** is then directed downward to wrap a second lower fixed idle roller **640** and then directed upwards to feed station **330**. The dancer roller **636** is mounted across a pair of levers **642** that can be pivoted about by a pivot attachment **646** to the frame **611**. A lever arm **656** is clamped and pinned to the lever pivot attachment **646** to rotate therewith. The lever arm **656** includes a tail portion **657** below the attachment **646**. The rollers **632**, **634**, **638**, and **640** are all rotatably attached to the frame **611**.

As shown in FIG. **5**, the lever arm **656** is rotatably attached at connection **660** to an extendable rod **662** of a pneumatic actuator **664**. The pneumatic actuator **664** includes a cylinder **666** that is connected to support bar **667** which is attached to

the frame **611**. A pre-selected pneumatic pressure delivered into the cylinder **666** urges the rod **662** outwardly. Pressurized air is pneumatically connected by a circuit to the cylinder **666**. The circuit includes a pressure compensating pressure regulator **669** (shown schematically) which delivers pressurized air into an inlet **671** to maintain a consistent pressure in the pneumatic cylinder **666** regardless of the travel of the rod **662**. The air pressure within the cylinder **666** urges the rod **662** to the right in FIG. **5**. Given typical surrounding parameters, this pressure can be about 12 psig. The preselected pressure sets the desired tension in the web over the pre-selected range of movement of the arm **656**. The arm **656** rotates the pivot attachment **646**, which in turn positions the dancer roller **636** to provide the appropriate tension. As illustrated in FIG. **6**, dancer rollers **636** may have a range of motion along the circular path illustrated by the arrows. FIGS. **7** and **8** illustrate three positions **636***a*, **636***b*, **636***c* as an example of the range of motion. Shock absorbers (not shown) can be used and engaged by extreme positions of the lever arm **656** or the tail portion **657** to cushion the end of travel of the arm **656** and tail portion **657**, resulting in better tension control. Grounding tabs (not shown) can be applied to the idle rollers to minimize static buildup during the feeding of the web material **312** over the rollers. The actuators **664** can be position sensing pneumatic cylinders, such as a POSITION FEEDBACK CYLINDER sold by Bimba Manufacturing Company of Monee, Ill., U.S.

For slicing machines that slice two or more side-by-side loaves, multiple sheet interleaving apparatuses **300** can be provided in a corresponding side-by-side arrangement. A side-by-side arrangement is illustrated in FIGS. **10** and **11**, In a side-by-side arrangement, one pivot arrangement extends through the center of the adjacent pivot arrangement. Pivot arrangement **646***b* is a cylindrical shaft with a diameter less than that of pivot arrangement **646***a*, such that pivot arrangement **646***b* can extend coaxially through the cylindrical shaft of pivot arrangement **646***a*. Pivot arrangement **646***a* with pivot arrangement **646***b* disposed within, extends exterior to the frame to connect with lever arms **656***a*, **656***b*. Pivot arrangement **646***a* extends at least up to lever arm **656***a*. Lever arm **656***a* engages with pivot arrangement **646***a* to move corresponding dancer roller **636***a*. Pivot arrangement **646***b* extends from pivot arrangement **646***b* to engage with lever arm **656***b*. Lever arm **656***b* engages with pivot arrangement **646***b* to move corresponding dancer roller **636***b*. The coaxial arrangement allows for multiple sets of actuating mechanisms **611***a*, **611***b* (FIG. **11**) to be on the same side of the machinery frame, thus saving space, simplifying wiring and tubing hook up, and providing for easier maintenance.

After being threaded through the tension control station **610**, the web material extends into the drawing station **316** before it reaches the sensor station **600**. The drawing station is illustrated in FIGS. **12**, **13**, and **15**. The web material **312** entering the drawing station **316** is wrapped around a drawing station fixed idle roller **690**. After the fixed idle roller **690**, the web material **312** is wrapped around the driven roller **502**. Driven roller **502** forms a nip **501** with a nip roller **503**. The nip roller **503** is a fixed idle roller disposed against the driven roller **502**. Nip roller **503** is held in position using a bracket **504** mounted to a support **505**. Support **505** extends from the sensor housing **506**.

Bracket **504** extends and retracts horizontally towards and away from the driven roller **502** as illustrated by the double headed arrow in FIG. **15**A. The support **505** to which the bracket **504** is mounted, moves towards and away from the sensor housing **506** to move the bracket **504**. When the bracket **504** is moved towards the driven roller, a nip is formed therebetween. To remove the roller **503** from contact with the driver roller **502**, the support **505** retracts towards the sensor housing **506**. The sensor housing comprises air inlets which are connected to an air supply source (not shown). Air entering the inlet is used to operate an actuating mechanism **513** (shown schematically in dashed lines in FIG. **15**A). Actuating mechanism **513** can be a pneumatic cylinder with a push rod connected to the sensor housing side of the support. Extension and retraction of the push rod causes the support **505** to retract and extend.

FIGS. **7** and **15**B illustrate the bracket **504**. The bracket **504** extends below the nip roller **503** on either side of the nip roller **503** to form a lower bar **509**. The lower bar **509** has an edge **514** in close proximity to the surface of the driven roller **502**. The edge **514** is used to prevent the web material from being wrapped around the driver roller **502** when the web material has a free edge, such as during initial threading of the web material through the interleaving apparatus. The edge **514** of the lower bar **509** of the bracket **504** assists to ensure that web material **312** goes past the two rollers **503**, **502** in a downward direction as illustrated by the arrow in FIG. **15**B, towards the sensor station **600**.

Driven roller **502** is driven by a drawing station motor **507**. In side-by-side arrangements having more than one driven roller (FIG. **15**), a motor **507***a*, **507***b* is used to drive each driven roller **502***a*, **502***b* (FIG. **15**C). Driven roller **502***a* is mounted on a shaft **520***a* which spans the length between the two sides **521***a*, **521***b* of the interleaver apparatus frame. Shaft **520***a* is coupled such that only driven roller **502***a* is driven by the rotating motion of the shaft **520***a*. The shaft **520***a* passes through a support **522** and driven roller **502***b*, but does not engage with driven roller **502***b* in a manner that would impart motion to the roller. Driven roller **502***b* is supported in position by the support **522** and by connection to side **521***b* of the interleaver apparatus frame, thus allowing driven roller **502***b* to be suspended above shaft **520***a* without contacting shaft **520***a*. Other configurations for preventing shaft **520***a* from imparting its motion to driven roller **502***b* are also possible. Motor **507***b* drives a shaft **520***b* which imparts its motion to driven roller **502***b* by way of a pair of sprockets **523**, **524** joined by a belt or chain **525**. Sprocket **524** is disposed on the end of the shaft **502***b* opposite the motor **507***b*, and drives a belt or chain **525**. Sprocket **523** is disposed on one end of driven roller **502***b*, such that any motion imparted to the sprocket **523** via the belt or chain **525** drives the drive roller **502***b*. Other suitable arrangements for imparting motion to driven roller **502***b* can be used, such as, for example, the use of a gear train.

The web accumulation station **329**, between the nip **501** and an intermediate idle roller **342**, provides a length of slackened web material between the high intermittent speed feed station **330** and the constant speed drawing station **316**. The accumulation station **329** includes a sensor station **600** that is used to sense the slackness, or accumulation, of the web material **312**.

FIG. **13** illustrates the sensor station **600**. The sensor station comprises a sensor **601** disposed within the sensor housing, along with an air nozzle **602**. The sensor **601** can be an ultrasonic sensor, an optical sensor, such as a laser or photo eye, or other type of sensor. The sensor can be a GV SERIES DIGITAL CMOS LASER SENSOR such as those sold by Keyence Corporation.

The sensor **601** can project an ultrasonic or optical beam signal downwardly toward the web loop **605** formed between the two rollers **342**, **502**. As illustrated in FIG. **13**, the sensor **601** is a laser distance transmitter which generates a laser distance sensor beam **607**. The sensor beam **607** measures the

web material's lowest position. The sensor **601** communicates with a control which is in signal communication with the drawing station motor **507**. For example, web position **312***a* has less web accumulation than web position **312***b*. If the slackness approaches the condition **312***a*, the drawing station motor **507** can be increased in speed to unwind material at a greater ate. If the slackness condition approaches condition **312***b* the motor **507** can be slowed. To maintain the web loop in a substantial V-shape, steady for sensing purposes, between the drawing station motor **507** and the feed station motor **360**, a stream of air **608** from the air nozzle **602** is directed downwards within the web material **312**.

FIG. **13**A illustrates an alternate embodiment of the accumulation station which uses a reflective photo eye sensor. The same reference designations refer to the same parts as previously discussed. A web accumulation station **329**A, between the nip **501** and an intermediate idle roller **342**, provides a length of slacked web material between the high intermittent speed feed station **330** and the constant speed drawing station **316**. The accumulation station **329** includes a sensor station **600***a* that is used to sense the degree of slackness, or accumulation, of the web material **312**.

The sensor station **600***a* comprises a sensor which is a reflective photo eye **601***a* disposed to cast a horizontal beam into the area of accumulation of the web material **312**. The photo eye **601***a* is used in conjunction with a reflective surface **602**. The photo eye **601***a* and the reflective surface are disposed on opposite sides of the area of accumulation of the web material. The reflective surface is oriented vertically and perpendicular to the path of the beam such that the beam of light contacting the reflective surface will be reflected back to the photo eye sensor. When the length of slacked web material forms a loop with a lowest point above the beam path, such as when the bottom of the loop is in position A, the beam of light from the photo eye to the reflective surface is uninterrupted, and the beam of light is reflected back to the photo eye and sensed. When the length of slacked web material forms a loop of sufficient slackened length so as to form a loop which interrupts the beam path, such as when the bottom of the loop is in position B, no light is reflected back to the photo eye. In the absence of a reflective beam, the driving station motor **507**, or the payout motor, is sent a signal to pay out web material at a slower rate. When the beam is reflected back to the sensor, the loop of web material has not accumulated a sufficient length to interrupt the beam path, and the driving station motor **507** is sent a signal to pay out web material at a faster rate. The photo eye can emit any electromagnetic beam, such as an infrared beam. Any other method of sensing the slackness of the web accumulation loop can also be used.

FIG. **9** illustrates in schematic form that a controller **800** receives a position signal **820** regarding the position of the dancer roller **636** based on the extension of the actuator rod **662** as a result of the degree of pivot of the pivot attachment **646**. The controller sends a signal **830** to the actuator **311** for the braking mechanism of the spool, which allows the controller to adjust the rate the roll **308** is unwound in response to position information of the dancer roller **636**. The controller **800** also can receive a signal **840** with the sensor **601** in the sensor station **600** and the feed station motor **850**. The sensor **601** detects the slacked length of the web material between the drawing station and the feed station, and communicates the signal **840** to the controller **800**. The controller signals the drawing station **301** that more or less web is needed to maintain the slacked length within a desired range. The controller can be a computer **54**.

By having a feedback system, the pre-selected level of tension in the interleaver web can be maintained due to the real time communication of positioning information. In one embodiment, the feedback loop may involve only the tension control station and the dispensing of web material from the reel to adjust the slack in the web material.

After the web material leaves the intermediate roller **342**, the web material enters the feed station **400**, illustrated in FIGS. **16** and **17**. Feed station **400** comprises a feed roller **420** driven by an endless belt **500** connected to a drive motor **410**. Idle roller **530** is positioned in contact along the endless belt **500** pathway to provide tension in the endless belt **500**.

A nip **470** is formed by the contact of the feed roller **420** and the upward edge **471** of the nip plate device **430**. The feed roller **420** can be coated to provide friction at the nip **470**. The feed roller **420** may be coated with rubber, or other properties with similar desirable characteristics.

A nip plate device **430** is used to guide the web material **312**. Web material **312** glides along the nip plate device **430** towards the nip **470**. Nip **470** opens and closes as a result of movement of the nip plate device **430**. Nip plate device **430** pivots or tilts about a pivot axis **535**. The nip plate device **430** is attached to a support block **536** via a pair of screws **537** (FIG. **16**). The pivot axis **535** passes through the support block **536**. Movement of the support block **536** about the pivot axis **535** tilts the upward edge **471** of the nip plate device towards and away from the feed roller **420**. A counterclockwise rotation of the nip plate device about the pivot axis **535** causes the upward edge **471** to move away from the feed roller **420**. A clockwise rotation of the nip plate device **430** about the pivot axis **535** causes the upward edge **471** to move towards the feed roller **420** to create a nip. Pneumatic cylinders **510** (FIG. **17**) connected to a coupling **538** (FIG. **16**) are used to actuate pivotal movement of the nip plate device **430**.

The nip plate device **430** has a raised edge **460** which assists in supporting the web material **312** as it is directed towards the nip **470**. Raised edge **460** decreases the slack in the web material **312** in the distance between idle roller **456** and the nip **470**. Alternately, the raised edge **460** of the nip plate device **430** can be used to stop the nip plate device **430** from pivoting in a clockwise direction beyond a certain point. The nip plate device **430** comprises a shear edge **490** disposed on the end of the nip plate device opposite the raised edge **460**. The shear edge **490** can be made of a plastic or polymeric material. The shear edge **490** forms a cutting nip **480** where the web material **312** is cut.

FIGS. **16** and **17** illustrate the feed station it is closed position (FIG. **16**) and both closed and open positions (FIG. **17**). The open position allows for the initial threading of the web material through the feed station up to the nip **470** formed between the feed roller **420** and the upward edge **471** of the nip plate device **430**, as well as for threading the web material between rollers **455**, **456**.

As the web **312** enters the feed station **400**, a guide plate **450** directs the web material **312** to a pair of idle rollers **455**, **456** which assist in maintaining the tension of the web material **312** in the feed station **400** (FIG. **16**). After the web material is threaded past the idle rollers **455**, **456**, the raised edge **460** of the nip plate device **430** guides the web material towards a nip **470** formed between the feed roller **420** and the upward edge **471** of the nip plate device **430**.

FIG. **18** illustrates an enlarged view of the guide plate **450**. Web material **312** enters the feed station by coming into contact with the guide plate **450**. Guide plate **450** has a curved edge **452** to allow better reception of incoming web material **312**. The web material glides along the guide plate towards idle roller **455**. To prevent the web material from slipping off the guide plate, the guide plate **450** has side rails **453** to keep the web material on the guide plate.

The guide plate **450** is pivotable about a pivot axis **451**. The pivot axis is disposed closer to one end of the guide plate than the other. The pivot axis is disposed closer to the end of the guide plate opposite the curved edge. As a result, the curved edge **452** end of the guide plate **450** in its natural state is inclined to tilt downwards due to gravity, towards a position shown in dashed lines in FIG. **18**. The natural inclination towards a downwards tilt of the curved edge **452** end causes the opposite end to tilt upwards to form a nip **454** with idle roller **455**. The inclination towards forming a nip is useful when initially threading the interleaver apparatus. A user threads the web material **312** from the sensor station **600** towards the guide plate **450**. To thread the web material **312** from the guide plate towards the rest of the assembly in the feed station, the user typically moves towards the feed station end of the apparatus to pull the web material **312** from the nip **454**. The nip **454** holds the web material **312** until the user reaches the other side of the feed station to pull the web material **312** from the other end. Without the nip **454**, the web material may slip off the guide plate. The use of the nip **454** enables one user to thread the machine. When the interleaver apparatus is in motion, the guide plate is pivoted to the position shown in solid lines in FIG. **18**, wherein the guide plate **450** is no longer in contact with idle roller **455** to form a nip. This allows web material **312** to pass through the idle roller **455** towards the second idle roller **456**.

FIG. **19** illustrates a side view of the slicer and the interleaver apparatus. The material supply **301**, tension control station **610**, drawing station **330**, and sensor station **600** are all mounted to a moveable frame assembly **700**. The slicing machine **50** is connected to pivot arms **701**, **702** which allow the slicing machine to move from its raised position (as illustrated in FIG. **19**) to a lowered position (not shown) where the slicing machine **50** is more accessible for maintenance and repairs. In its raised position, the material supply **301**, tension control station **610**, drawing station **316** and sensor station mounted on the moveable frame assembly **700** can fit in the space underneath the raised portion of the slicing machine **50** and above the base **51**. When the slicing machine **50** is to be lowered for maintenance or repairs, there is no longer room for the interleaver components to be disposed beneath the slicer machine **50**. The moveable frame assembly **700** comprises a lower portion **720** which houses electrical components. The upper portion **730** of the frame assembly comprises a support frame **611** to which components of the tension control station, drawing station, and sensor station are connected.

Support frame **611** is connected to a housing **765** which pivots about a pivot shaft **760** (FIGS. **20** and **21**). The pivot shaft connects the upper portion **730** of the frame assembly to the lower portion **720** of the frame assembly. The upper portion **730** of the frame assembly can be pivoted about the pivot shaft **760** while the lower portion **720** of the frame assembly remains stationary. The upper portion **730** can be pivoted about the pivot shaft to allow for easier maintenance of the components within the upper portion **730** of the frame assembly, or to allow at least some lowering of the slicing machine **50**. The pivot shaft **760** is a hollow cylinder which can be used as a conduit for the passing of cables and tubes between the upper and lower portions **730**, **720**.

To ensure that the upper portion **730** of the frame assembly does not inadvertently pivot when movement is not desired, a pin **740** is used to lock the loose end of the upper portion **730** in position. An arm **770** extending from the support frame **611** is a cylindrical shaft through which a pin **740** is passed to lock the frame **611** in place. The pin **740** passes through the cylindrical shaft arm **770** of the housing **611** and is secured to a pin mount **775** connected to the top surface **776** of the lower portion **720**. The pin **740** is secured to the pin mount **775** by a threaded coupling. Other methods of securing the frame **611** to prevent unwanted movement about the pivot shaft can also be used.

The upper and lower portions **730**, **720** of the frame assembly rest on a pair of forked prongs **780**, which provide stability to the moveable frame assembly **700**. The forked prongs **780** are of a distance above the floor such that the forked prongs **780** are able to slide underneath the base **51** of the slicing machine **50**. By sliding the forked prongs **780** underneath the base **51** of the slicing machine, the frame assembly is able to be positioned dose to the slicing machine. Caster wheels **750** on the underside of the forked prongs **780** allow for the entire assembly to move.

From the foregoing, it will be observed that numerous variations and modifications may be effected without departing from the spirit and scope of the invention. it is to be understood that no limitation with respect to the specific apparatus illustrated herein is intended or should be inferred.

All references, including publications, patent applications, and patents, cited herein are hereby incorporated by reference to the same extent as if each reference were individually and specifically indicated to be incorporated by reference and were set forth in its entirety herein.

The invention claimed is:

1. A sheet interleaver system for a slicing machine having a slicing plane for slicing an elongated food product and for slicing a sheet of web material beneath said elongated product, comprising:

a supply of web material;

a drawing station having a first driver for drawing web material from said supply;

a feed station having a second driver for receiving web material from said drawing station and driving said web material through a cutting nip into said slicing plane;

a first tensioning station between the drawing station and the supply of web material, said first tensioning station exerting a pre-determined tension on the web material, wherein the first tensioning station comprises:

a dancer roller mounted across a pair of levers;

a lever pivot attachment for moving the pair of levers, said levers extending from the pivot attachment; and

an actuating mechanism pivotably connected to a lever arm which moves the pivot attachment and the dancer roller across a range of travel; and

a second tensioning station adjacent to the first tensioning station, said second tensioning station having a dancer roller mounted across a pair of levers, a lever pivot attachment for moving the pair of levers, said levers extending from the pivot attachment; and wherein the lever pivot attachment of the first tensioning station is a hollow shaft, and wherein the lever pivot attachment of the second tensioning station passes through the hollow lever pivot attachment in a concentric arrangement.

2. The sheet interleaver system of claim **1** wherein the lever arm of the first tensioning station is connected to the lever pivot attachment of the first tensioning station on one end, and is rotatably attached to an extendable rod of the actuating mechanism of the first tensioning station on the opposite end.

3. The sheet interleaver system of claim **2** wherein the extension or retraction of the extendable rod moves the lever and the attached lever pivot attachment of the first tensioning station to move the dancer roller of the first tensioning station across a circular path about the lever pivot attachment of the first tensioning station.

4. The sheet interleaver system of claim 1 wherein the actuating mechanism of the first tensioning station is a pneumatic actuator having an inlet, said actuating mechanism of the first tensioning station comprising a pressure regulator connected to the inlet of the pneumatic actuator to deliver pressurized air into the inlet.

5. The sheet interleaver system of claim 4 wherein the pressure regulator maintains a consistent pressure in the pneumatic actuator.

6. The sheet interleaver system of claim 4, wherein the lever arm of the first tensioning station is connected to the lever pivot attachment of the first tensioning station on one end, and is rotatably attached to an extendable rod of the actuating mechanism of the first tensioning station on the opposite end, and wherein the extension or retraction of the extendable rod moves the lever and the attached lever pivot attachment of the first tensioning station to move the dancer roller of the first tensioning station across a circular path about the lever pivot attachment of the first tensioning station, and wherein the pressure regulator maintains a consistent pressure in the cylinder regardless of the extension of the extendable rod.

7. A sheet interleaver system for a slicing machine having a slicing plane for slicing an elongated food product and for slicing a sheet of web material beneath said elongated product, comprising:

a supply of web material;

a drawing station having a first driver for drawing web material from said supply;

a feed station having a second driver for receiving web material from said drawing station and driving said web material through a cutting nip into said slicing plane;

a tensioning station between the drawing station and the supply of web material, said tensioning station exerting a pre-determined tension on the web material; and

a brake mechanism for slowing the supply of web material by exerting a frictional force radially, wherein the supply of web material is on a spool rotatable about a cylindrical shaft, said brake mechanism disposed within the cylindrical shaft; and

wherein the brake mechanism includes a brake pad, and wherein the brake mechanism moves between an inactive position wherein the brake pad is flush with the surface of the cylindrical shaft, and an active position wherein the brake pad protrudes from the surface of the cylindrical shaft.

8. The sheet interleaver system of claim 7 wherein the brake mechanism comprises an action block, wherein the action block is connected to a rod of a pneumatic cylinder, wherein the pneumatic cylinder comprises an air pressure bladder, said bladder contracts and expands in proportion to the amount of air pressure supplied to the bladder, and wherein the action block has a contoured surface; and wherein the brake pad has a complementarily contoured surface in contact with the contoured surface of the action block and wherein movement of the action block causes the brake pad to protrude from the surface of the cylindrical shaft.

9. The sheet interleaver system of claim 7 wherein the brake mechanism comprises an action block, wherein the action block is connected to a rod of a pneumatic cylinder, wherein the pneumatic cylinder comprises an air pressure bladder, said bladder contracts and expands in proportion to the amount of air pressure supplied to the bladder, and wherein the movement of the action block across an inclined portion of the brake pad causes the brake pad to protrude from the surface of the cylindrical shaft.

* * * * *