US009399531B2

(12) **United States Patent**
Pryor et al.

(10) **Patent No.: US 9,399,531 B2**
(45) **Date of Patent: Jul. 26, 2016**

(54) **SHEET INTERLEAVER FOR SLICING APPARATUS**

(75) Inventors: **Glen F. Pryor**, Tinley Park, IL (US); **Scott A. Lindee**, Mokena, IL (US); **James E. Pasek**, Tinley Park, IL (US)

(73) Assignee: **Formax, Inc.**, Mokena, IL (US)

(*) Notice: Subject to any disclaimer, the term of this patent is extended or adjusted under 35 U.S.C. 154(b) by 565 days.

(21) Appl. No.: **12/091,733**

(22) PCT Filed: **Oct. 25, 2006**

(86) PCT No.: **PCT/US2006/041616**

§ 371 (c)(1), (2), (4) Date: **Apr. 25, 2008**

(87) PCT Pub. No.: **WO2007/050677**

PCT Pub. Date: **May 3, 2007**

(65) **Prior Publication Data**

US 2008/0250944 A1 Oct. 16, 2008

Related U.S. Application Data

(60) Provisional application No. 60/729,958, filed on Oct. 25, 2005, provisional application No. 60/730,304, filed on Oct. 26, 2005.

(51) **Int. Cl.**

B26D 7/06 (2006.01)
B65B 25/08 (2006.01)

(Continued)

(52) **U.S. Cl.**

CPC . ***B65B 25/08*** (2013.01); ***B26D 7/27*** (2013.01); ***B26D 7/325*** (2013.01); *B26D 7/32* (2013.01);

(Continued)

(58) **Field of Classification Search**

CPC B26D 7/27; B26D 7/325; B26D 7/32; B26D 2210/02; B26D 7/14; B26D 5/00; B26D 7/06; B65B 25/08; A47J 43/00

USPC 99/537; 83/76.1, 474, 520, 174, 651, 83/932, 167, 422, 707, 703, 596; 451/45, 451/5; 426/420; 53/435

See application file for complete search history.

(56) **References Cited**

U.S. PATENT DOCUMENTS

3,481,746 A * 12/1969 Clemens et al. 426/420
3,772,040 A * 11/1973 Benson et al. 426/420

(Continued)

FOREIGN PATENT DOCUMENTS

DE	3230988	2/1984
DE	10011006	9/2001
WO	0176996	10/2001

OTHER PUBLICATIONS

European Search Report for corresponding application.

(Continued)

Primary Examiner — Reginald L Alexander

(74) *Attorney, Agent, or Firm* — Klintworth and Rozenblat IP LLC

(57) **ABSTRACT**

A sheet interleaver is provided for a slicing machine that includes a slicing plane for slicing an elongated food product and a sheet from web material beneath the elongated product. The interleaver includes a supply of web material, a drawing station, a feed station, and a controller. The drawing station has a first driver for drawing web material from the supply. The feed station has a second driver for receiving web material from the drawing station and driving the web material through a cutting nip into the slicing plane. The controller is in signal-communication with at least one of the first and second drivers to drive web material at select differential speeds by the first and second drivers such that tension between the drawing station and the feed station is controlled to allow a slackened length of web material between the drawing station and the feed station.

15 Claims, 25 Drawing Sheets

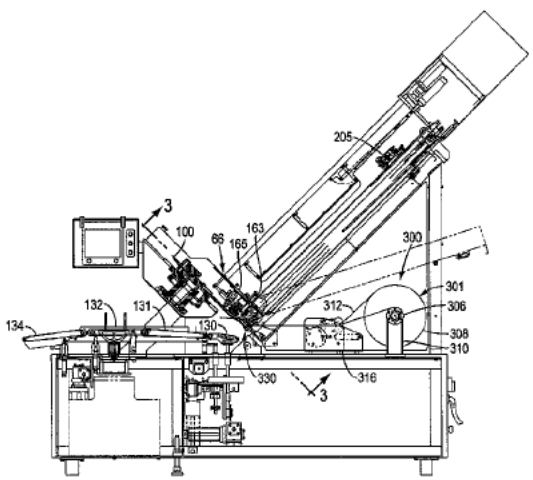

(51) **Int. Cl.**
B26D 7/27 (2006.01)
B26D 7/32 (2006.01)

(52) **U.S. Cl.**
CPC *B26D 2210/02* (2013.01); *Y10T 83/148* (2015.04); *Y10T 83/323* (2015.04); *Y10T 83/664* (2015.04)

(56) **References Cited**

U.S. PATENT DOCUMENTS

3,889,325 A * 6/1975 Fleissner 26/18.5
3,921,803 A 11/1975 Reed et al.
4,583,435 A 4/1986 Fessler
4,913,049 A 4/1990 Sainio
5,051,268 A * 9/1991 Mally 426/420
5,611,194 A 3/1997 Wildmoser
5,628,237 A 5/1997 Lindee et al.
5,649,463 A 7/1997 Lindee
5,704,265 A 1/1998 Johnson et al.
5,724,874 A 3/1998 Lindee et al.
5,768,959 A * 6/1998 Lorenzo 83/74
6,079,188 A 6/2000 Katayama et al.
6,153,233 A * 11/2000 Gordon et al. 426/90
6,305,145 B2 * 10/2001 Suolahti 53/64
6,408,757 B2 * 6/2002 Ogawa et al. 101/480
6,484,615 B2 11/2002 Lindee
6,616,084 B1 * 9/2003 Sitzmann 242/534
6,698,681 B1 * 3/2004 Guy et al. 242/534
6,752,056 B1 * 6/2004 Weber 83/98
2003/0089209 A1 5/2003 Brueckel et al.

OTHER PUBLICATIONS

Notice of Opposition EP06817369 (May 9, 2012).
Evidence Cited in Notice of Opposition EP06817369 (May 9, 2012).
Patent Document Citations in Notice of Opposition EP06817369 (May 9, 2012).
EPO Communication Re Notice of Opposition in EPEP06817369 (Sep. 18, 2012).
EPO Communication to File Observations in Opposition EPEP06817369 (Dec. 10, 2012).
EPO Notice to Opponents in Opposition EPEP06817369 (Dec. 10, 2012).
International Search Report (May 9, 2008).
Supplemental European Search Report (Aug. 7, 2010).

* cited by examiner

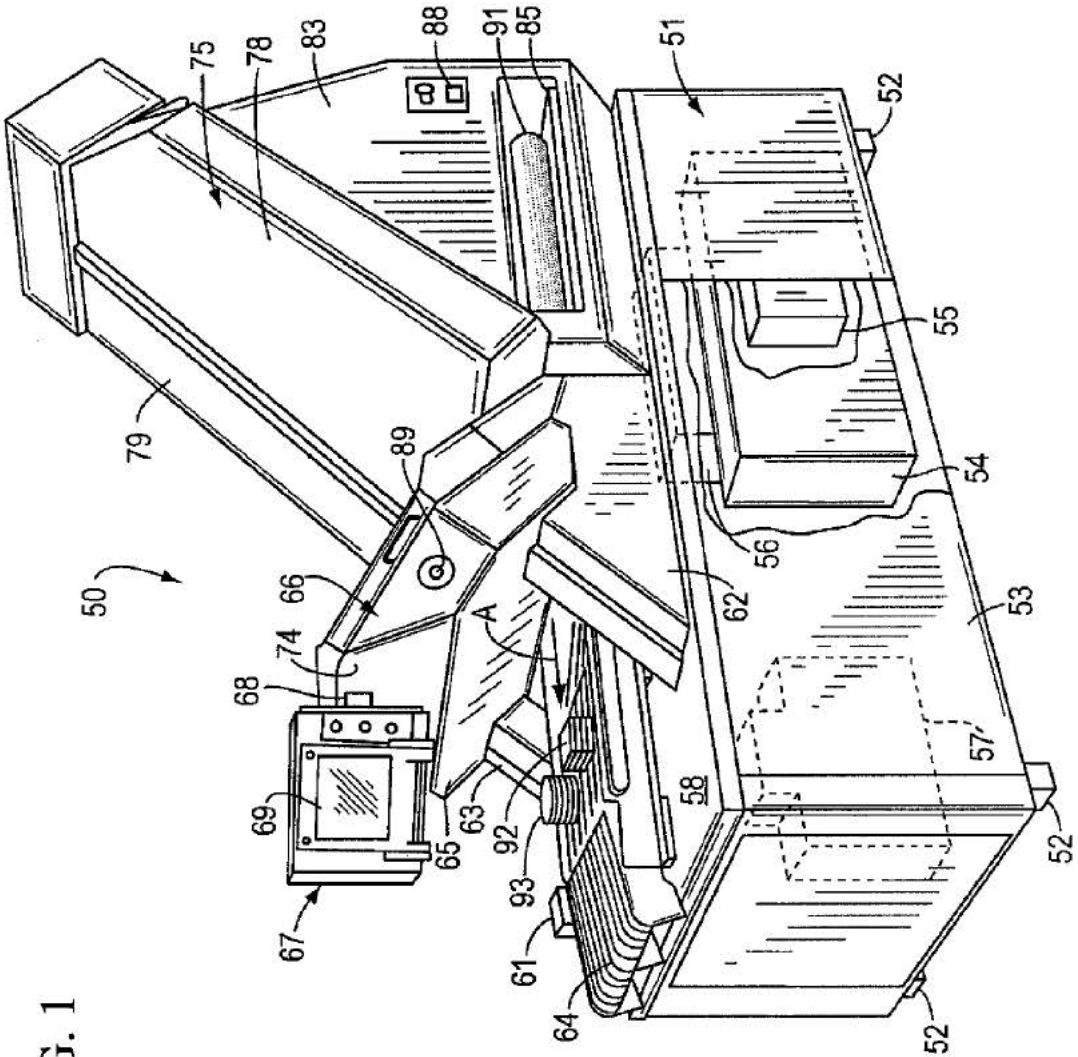
50
51
52
53
54
55
56
57
58
61
62
63
64
65
66
67
68
69
74
75
78
79
83
85
88
89
91
92
93
A

FIG. 1

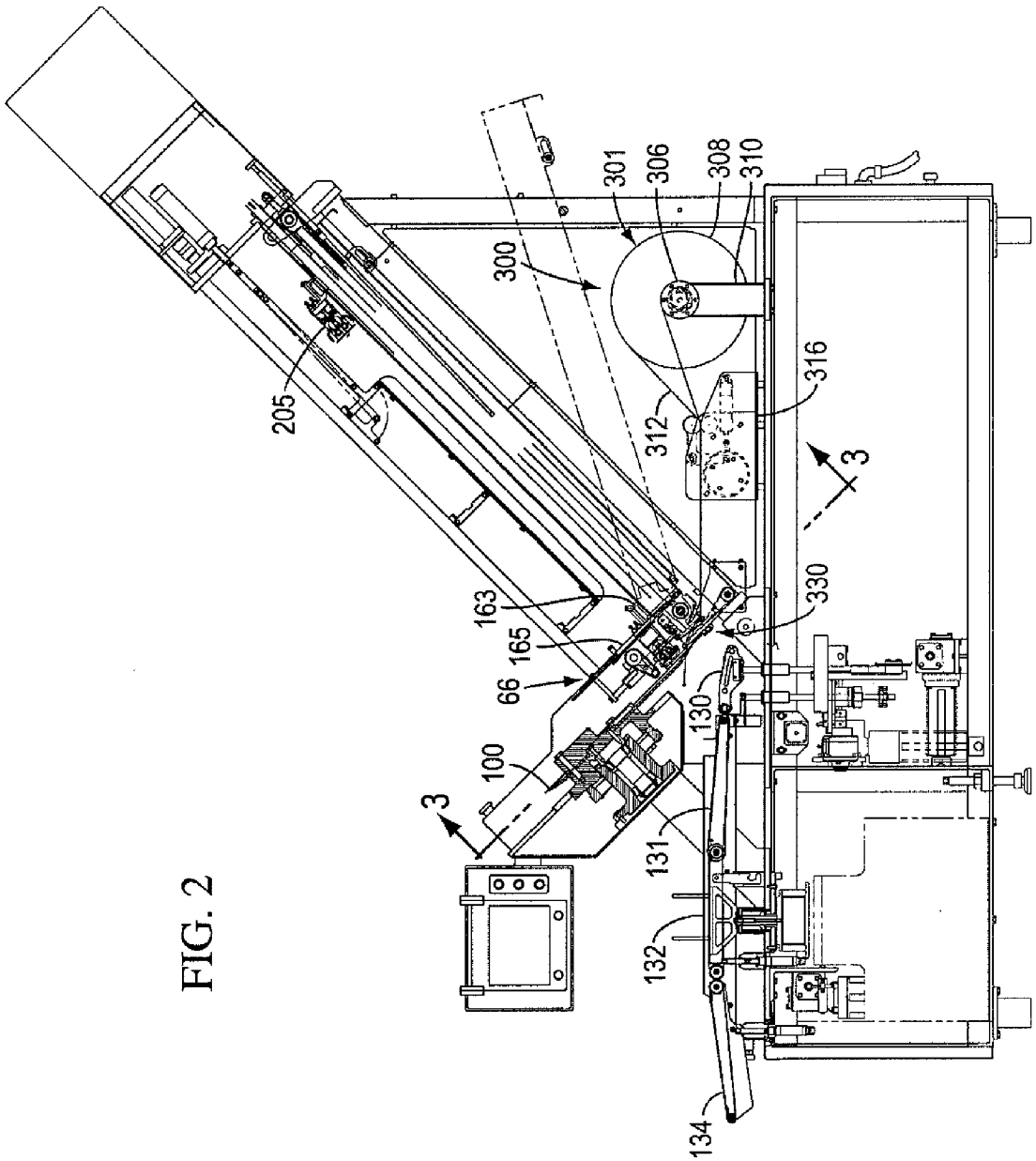
205
300
301
306
308
310
312
316
3
3
163
165
66
100
330
130
131
132
134

FIG. 2

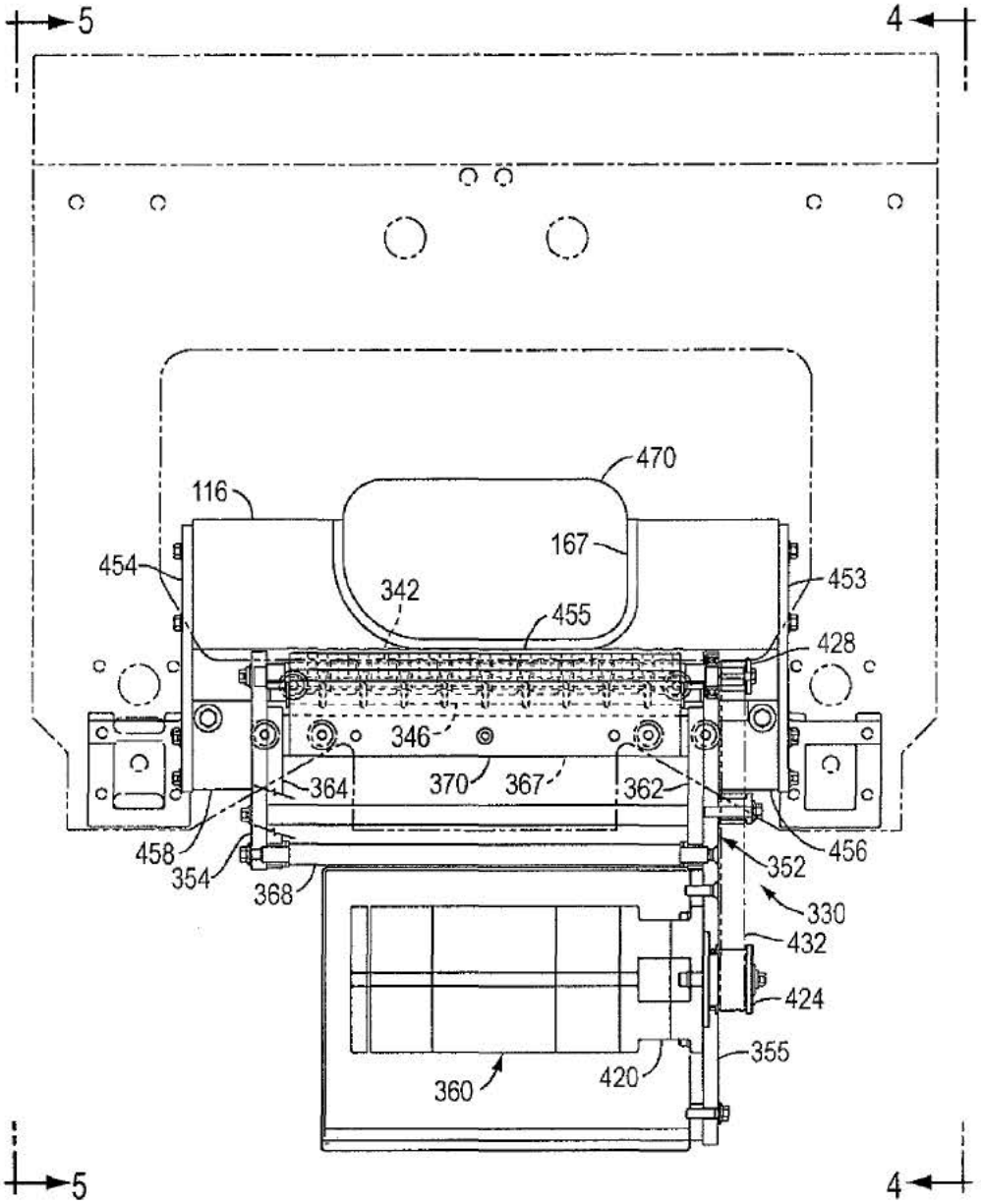
5
4
470
116
167
454
453
342
455
428
346
364
370
367
362
458
354
368
352
456
330
432
424
355
360
420
5
4

FIG. 3

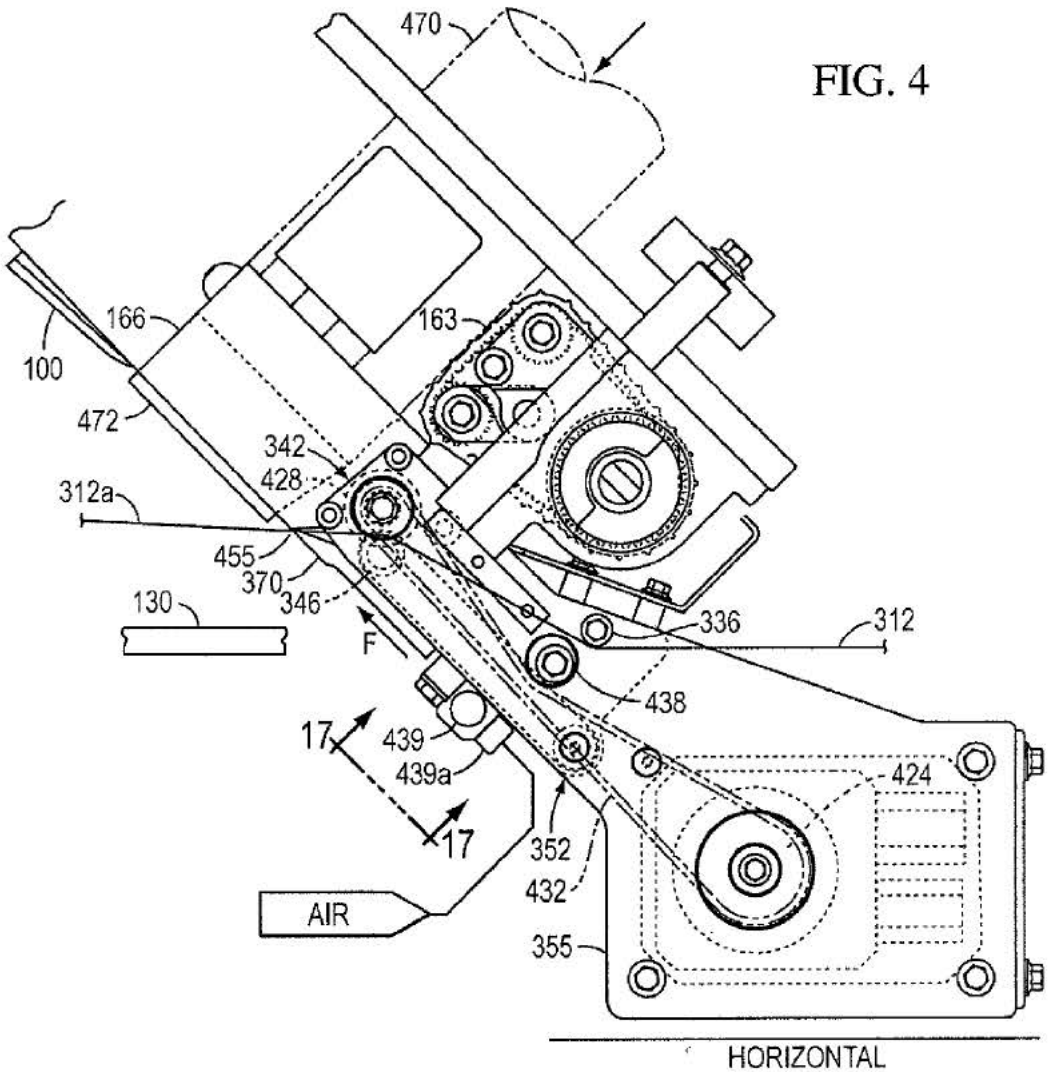
470
166
100
472
163
342
428
312a
455
370
346
130
F
336
312
438
17
439
439a
17
352
432
AIR
355
424
HORIZONTAL

FIG. 4

FIG. 5

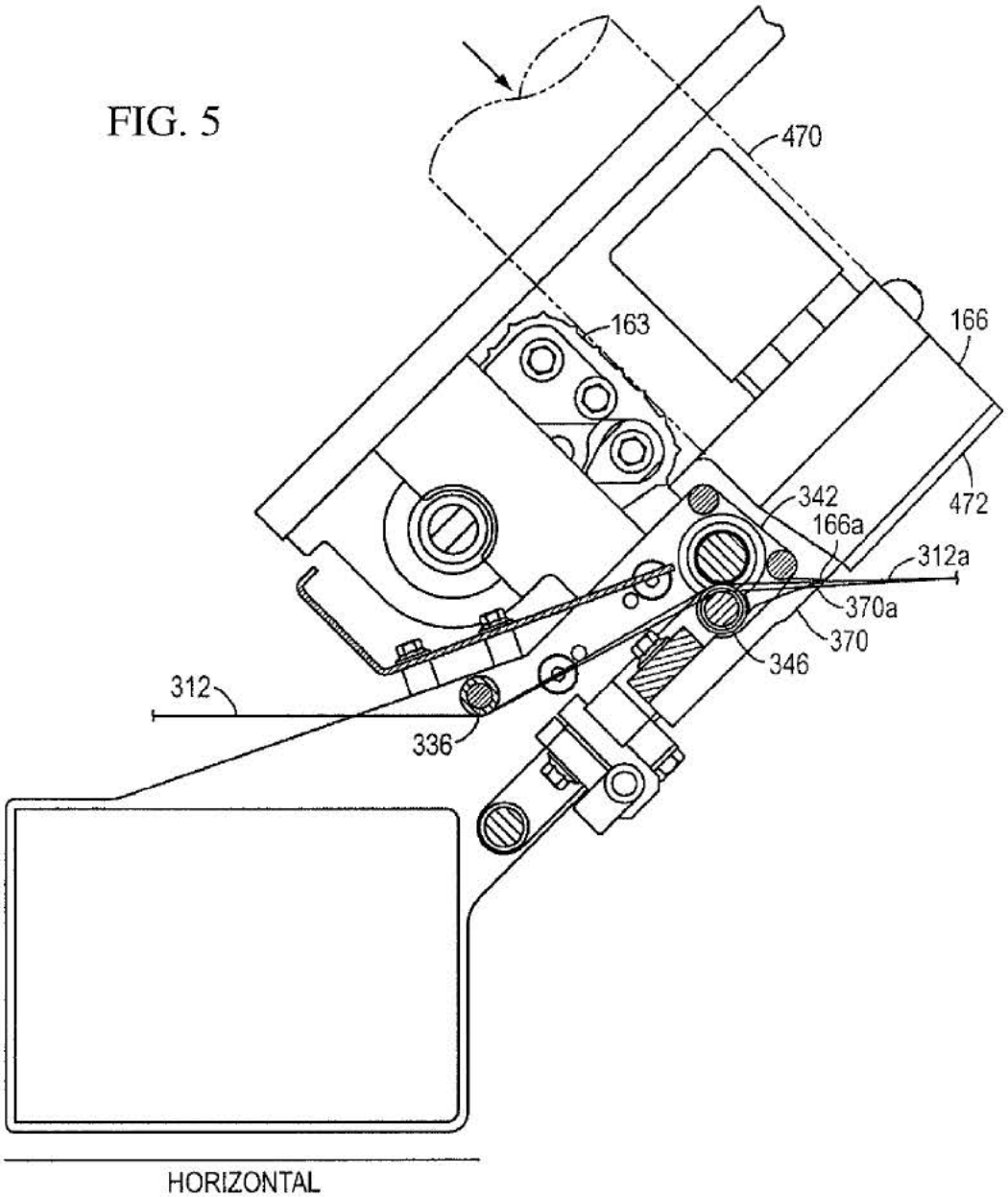

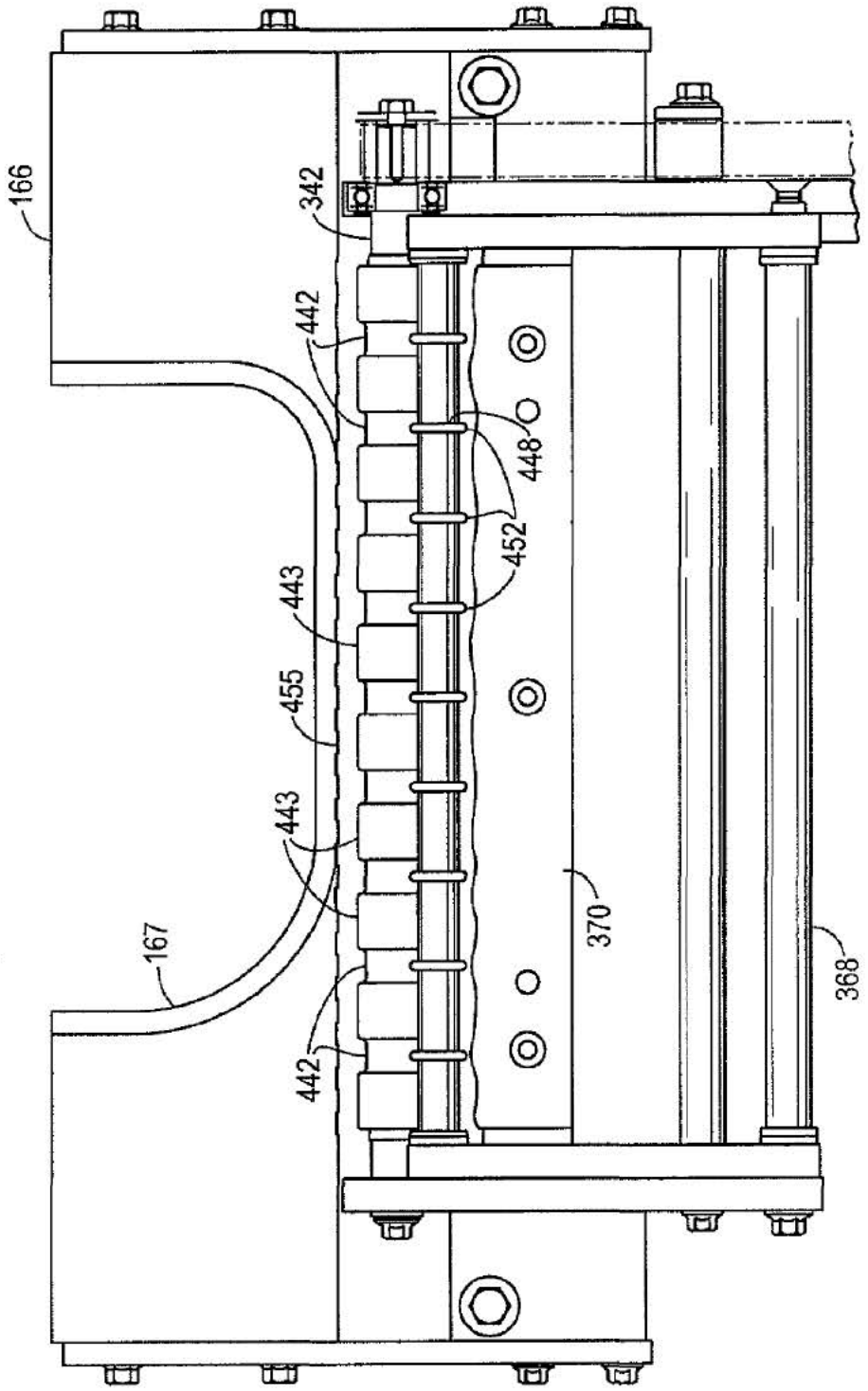

FIG. 6

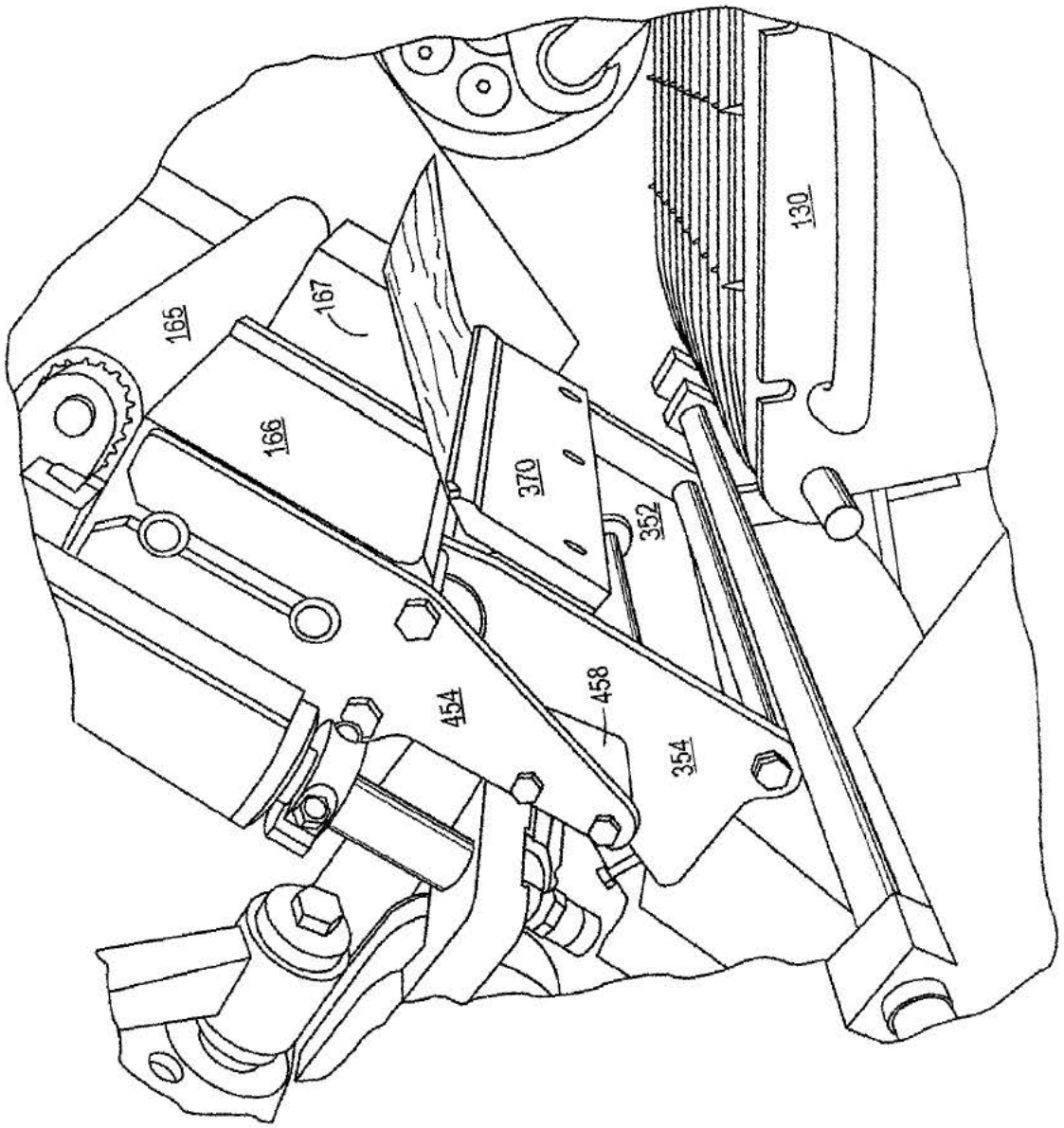

FIG. 7

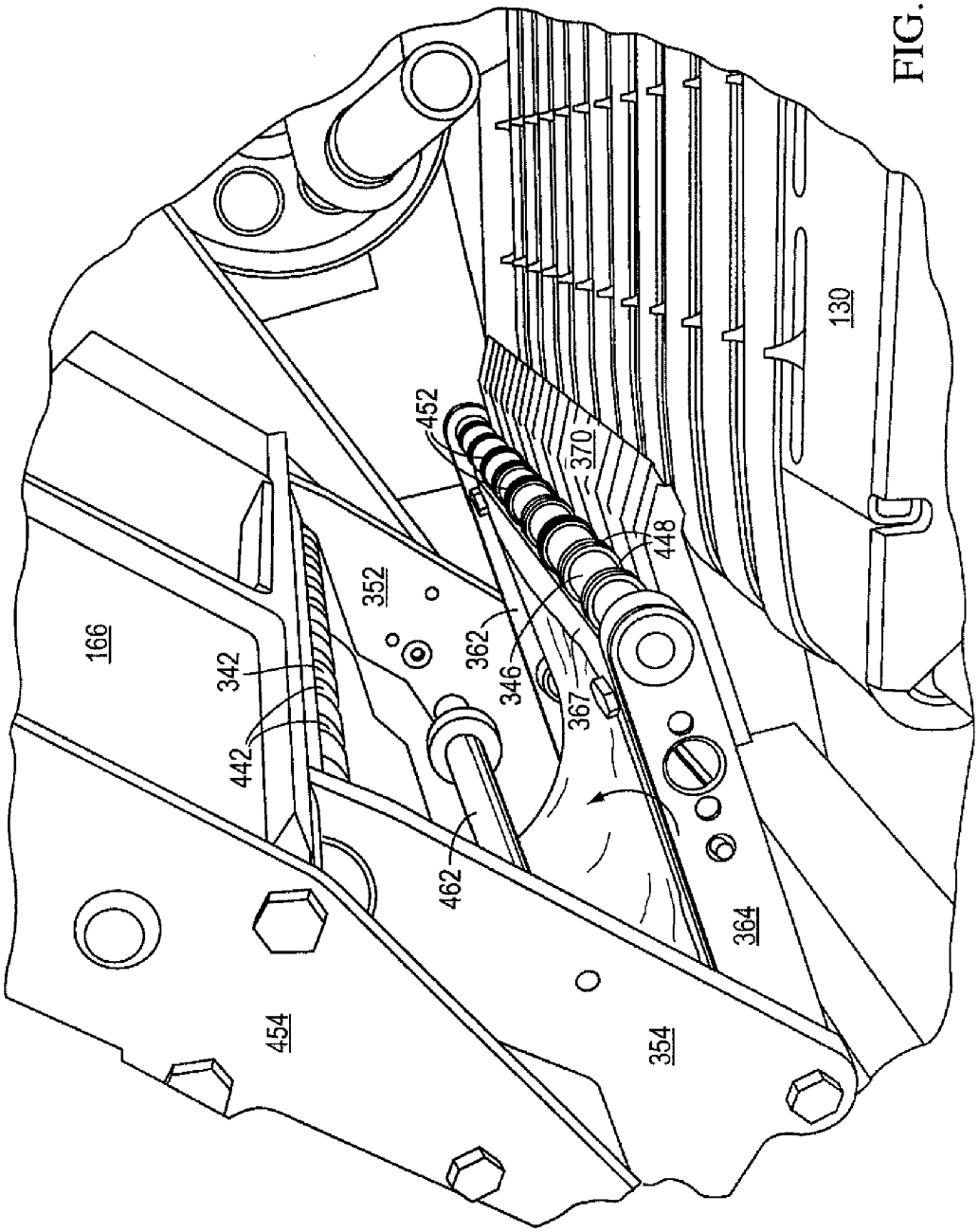

FIG. 8

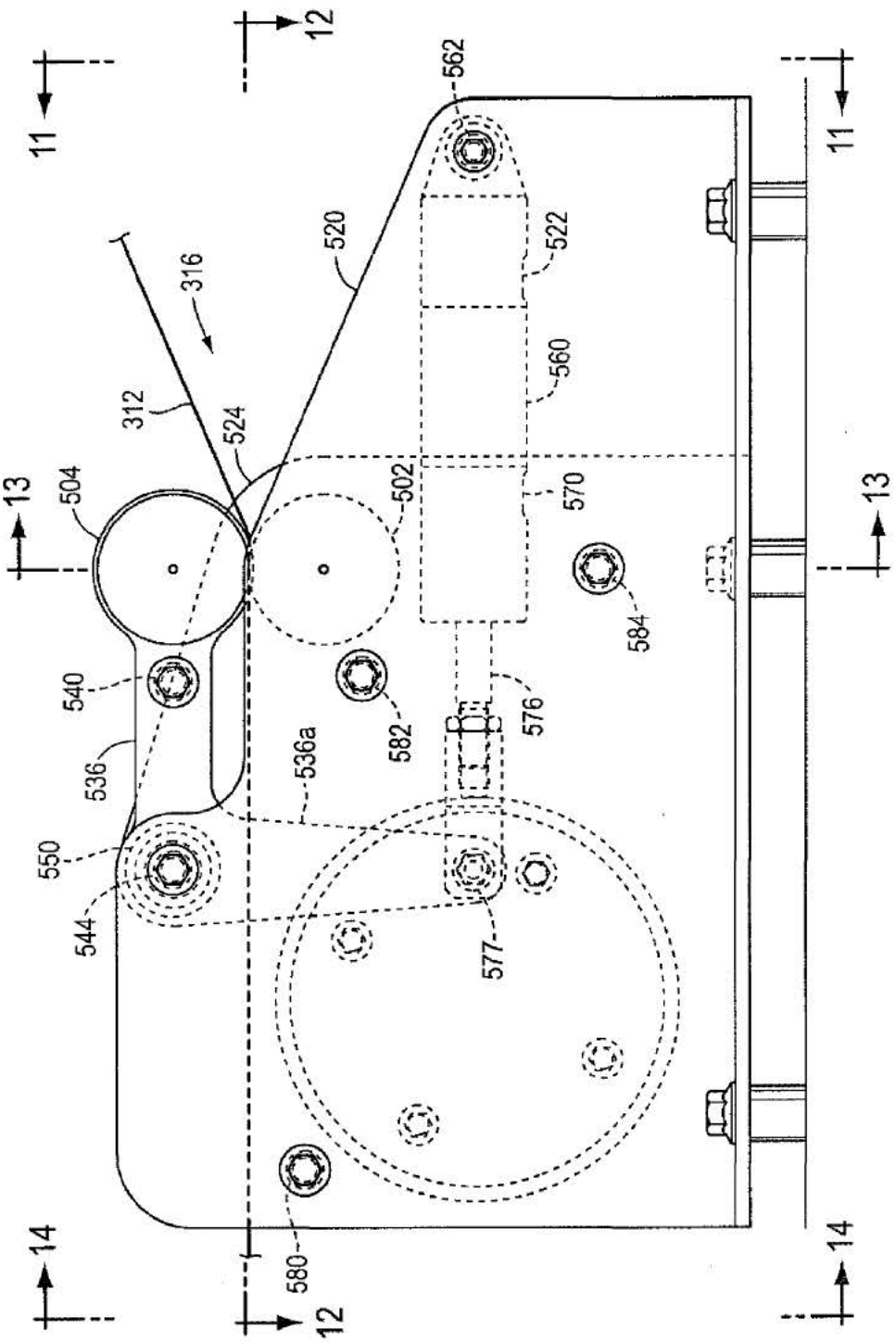
11
12
13
14
316
312
504
524
520
562
522
560
502
570
584
540
582
576
536
536a
550
544
577
580

FIG. 9

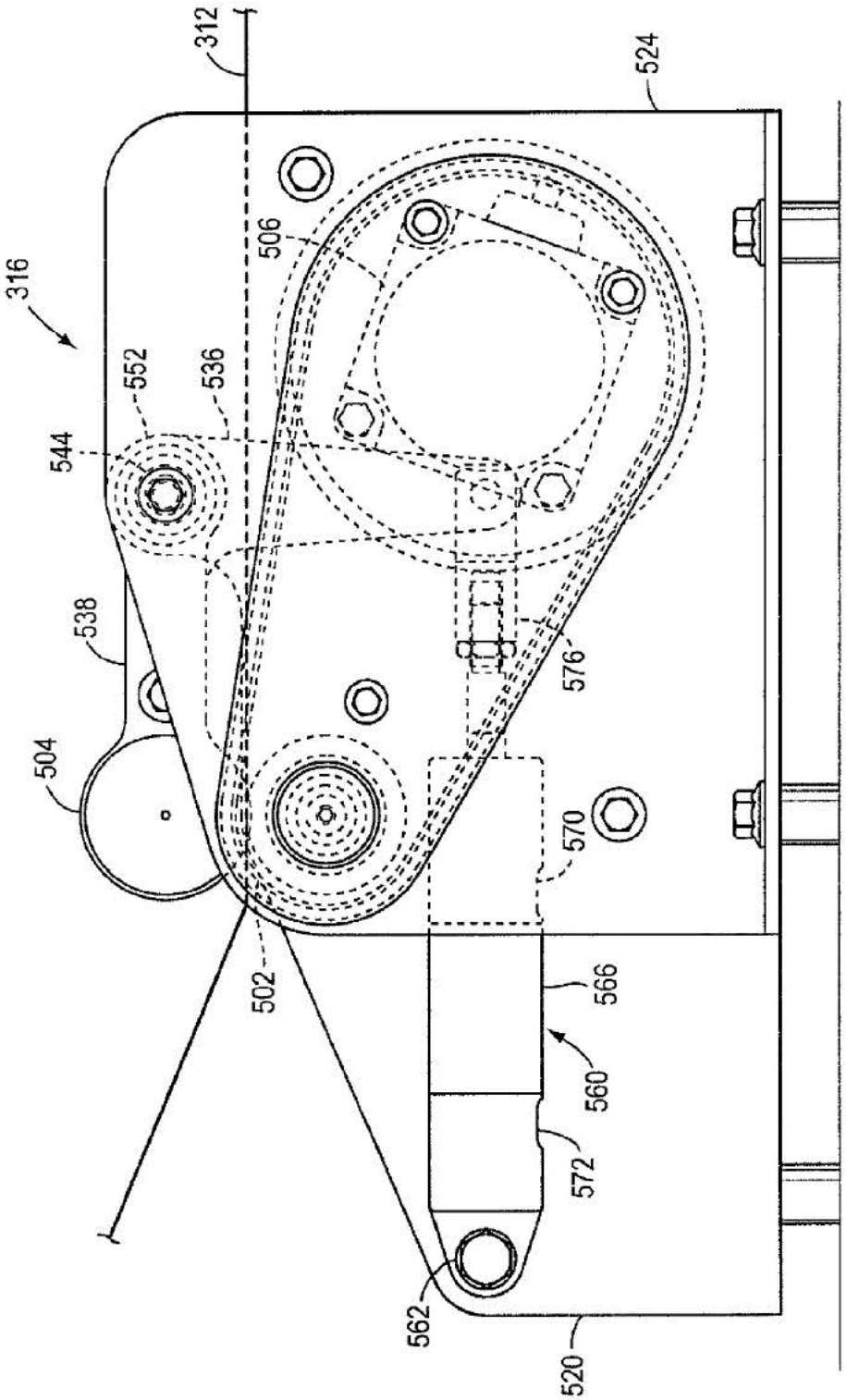
312
524
316
506
552
536
544
538
504
576
570
502
566
560
572
562
520

FIG. 10

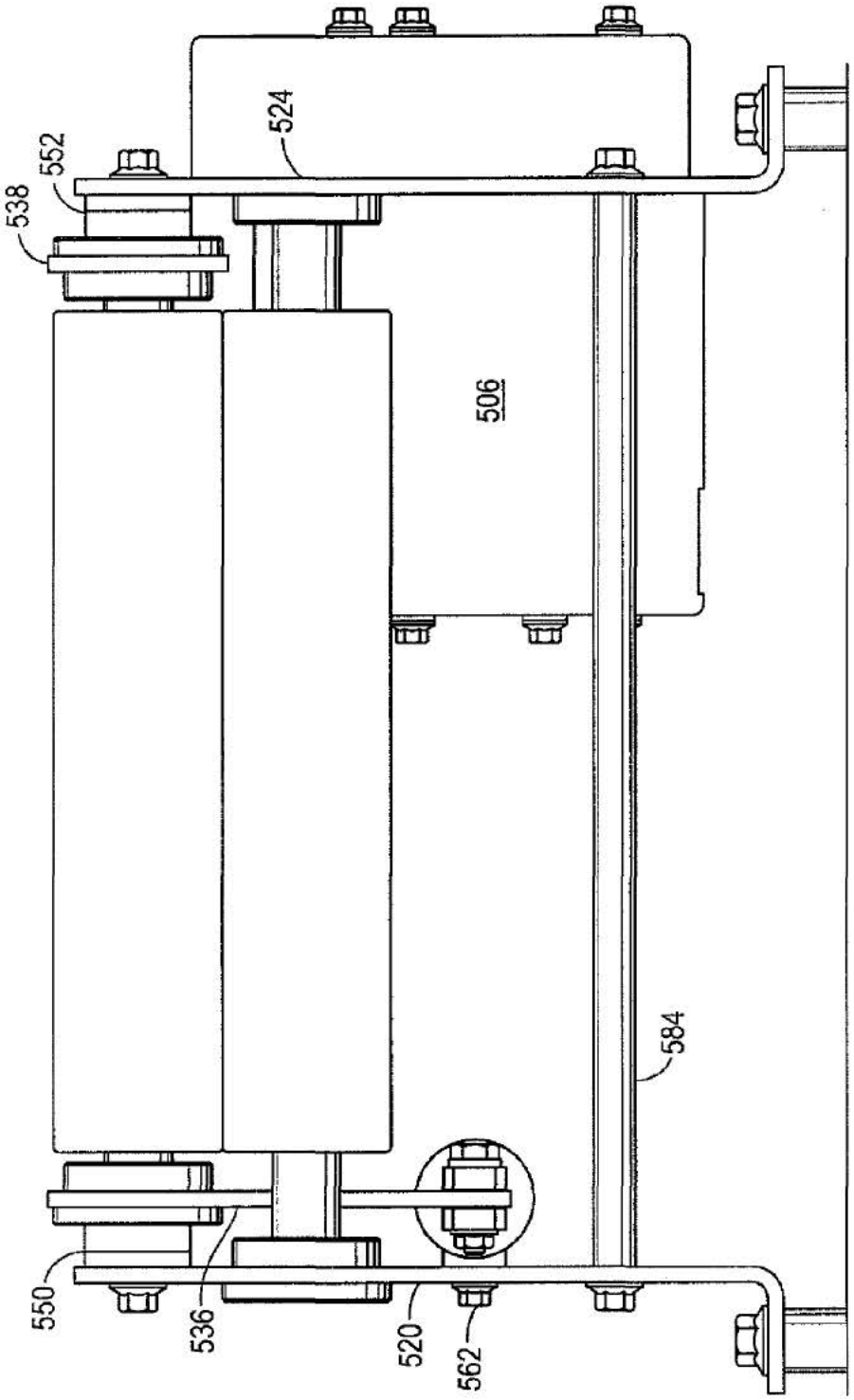

FIG. 11

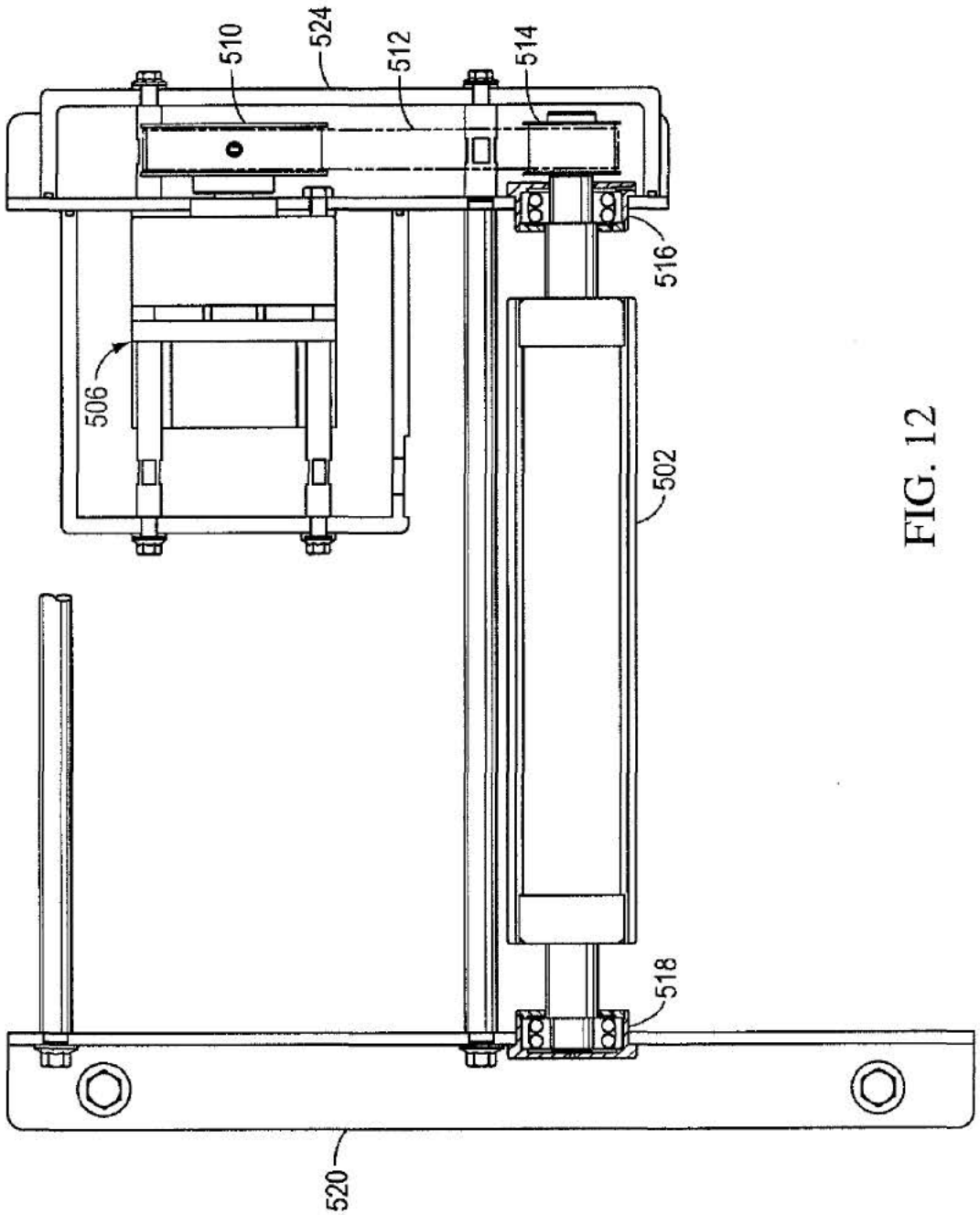

FIG. 12

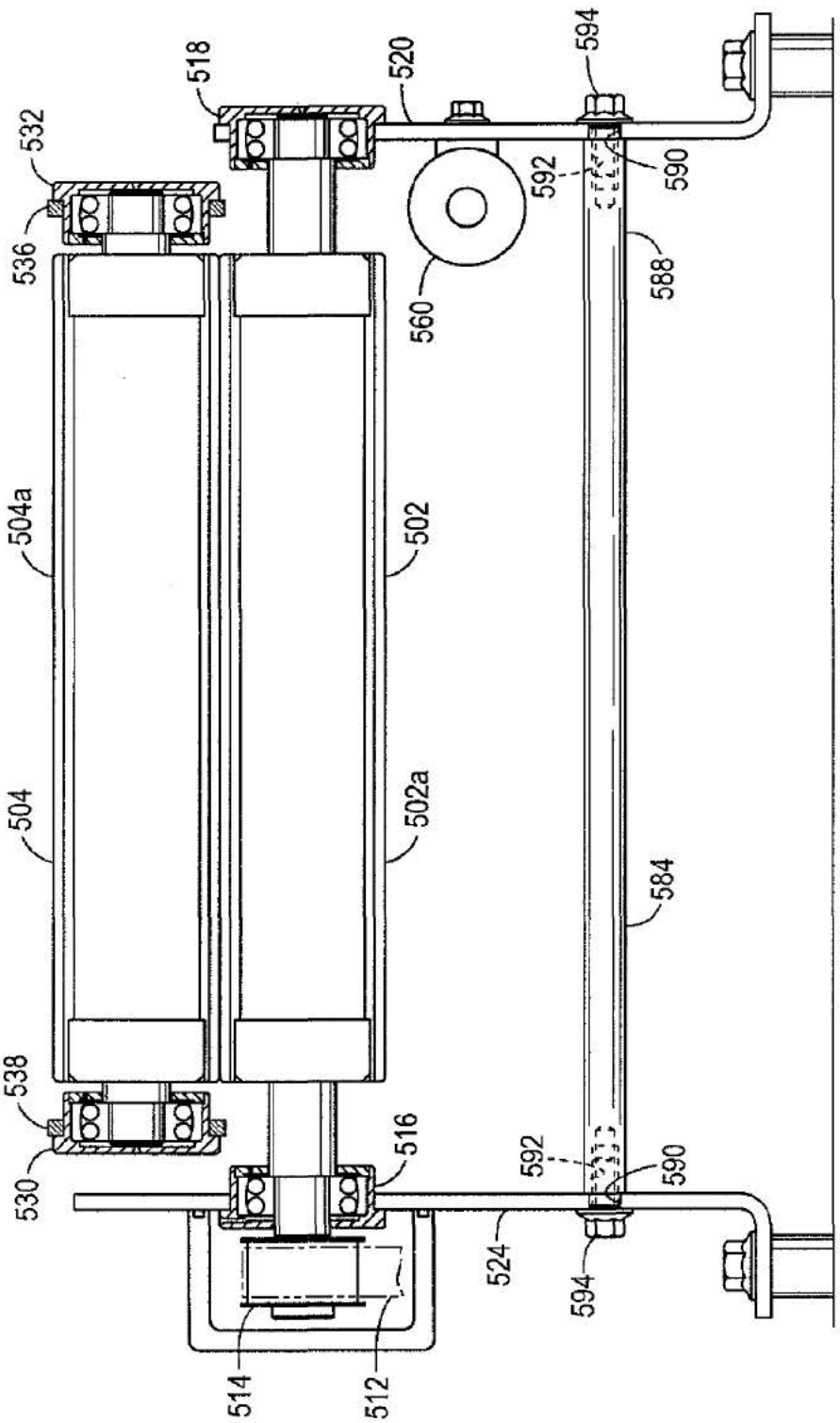
518
520
594
532
536
592
590
588
560
504a
502
504
502a
584
538
530
516
592
590
524
594
514
512

FIG. 13

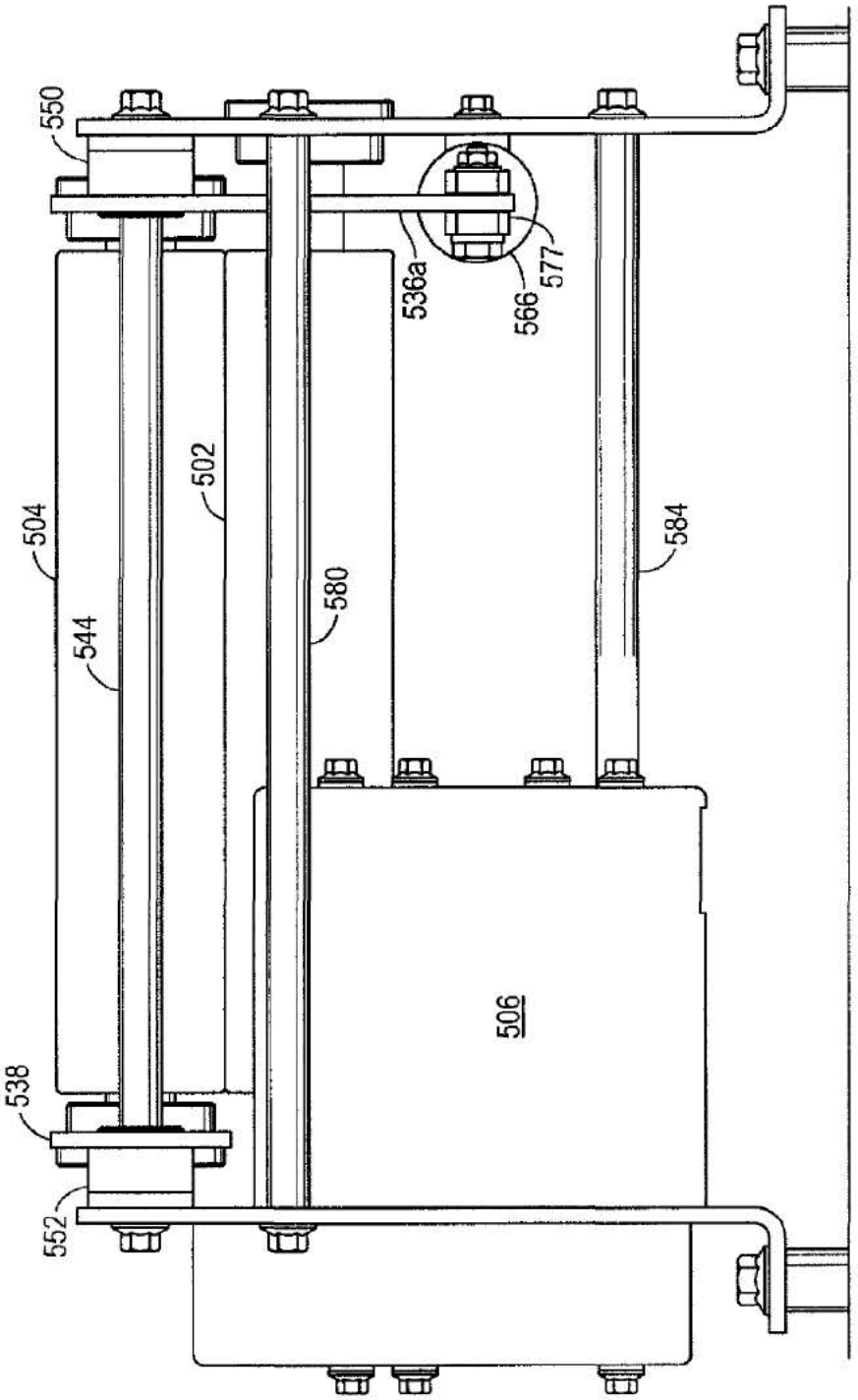

FIG. 14

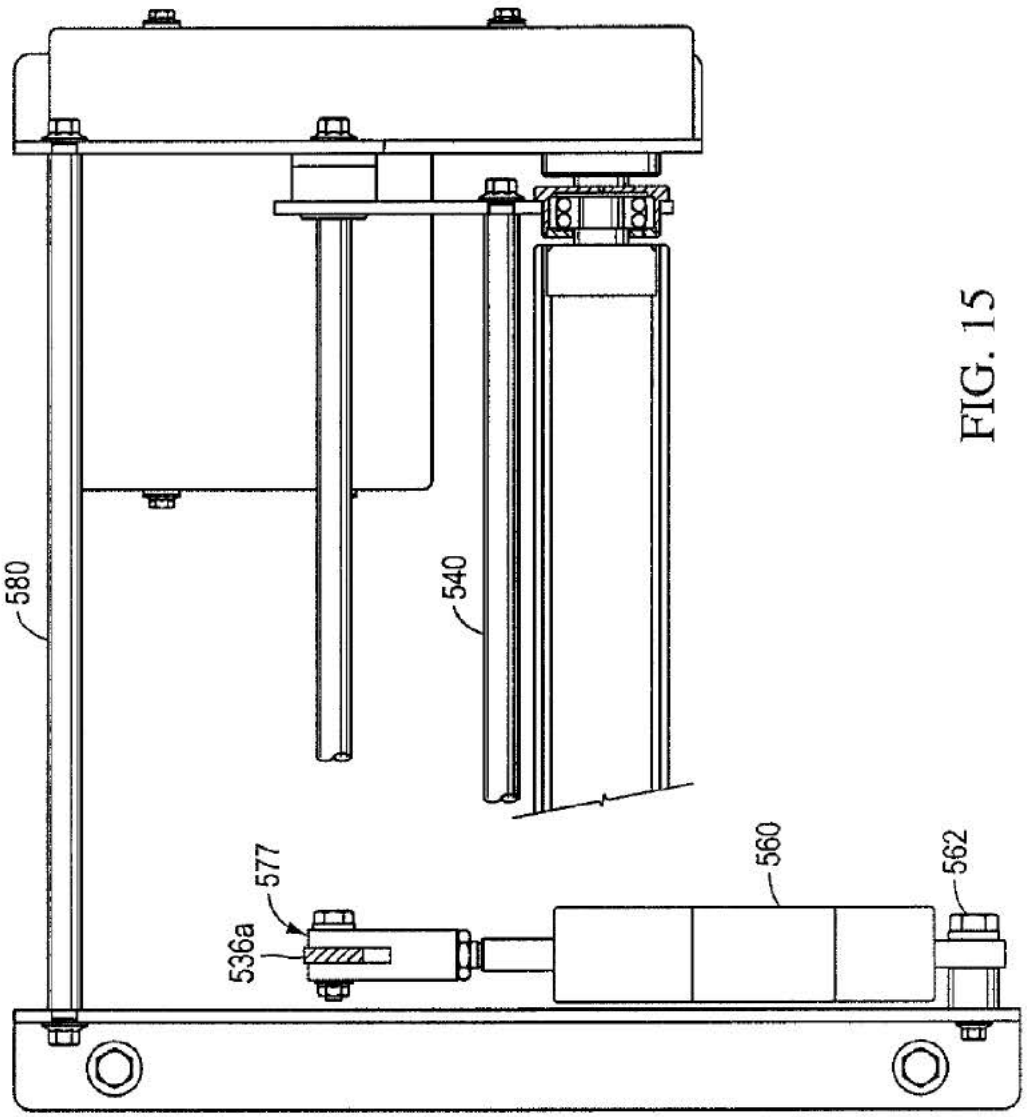

FIG. 15

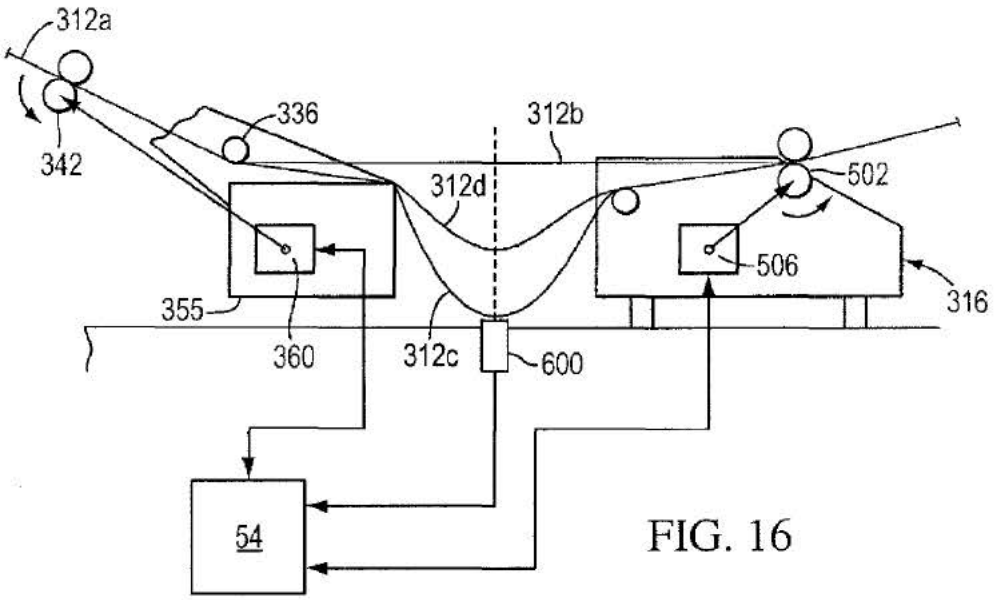
312a
342
336
312b
312d
502
506
316
355
360
312c
600
54

FIG. 16

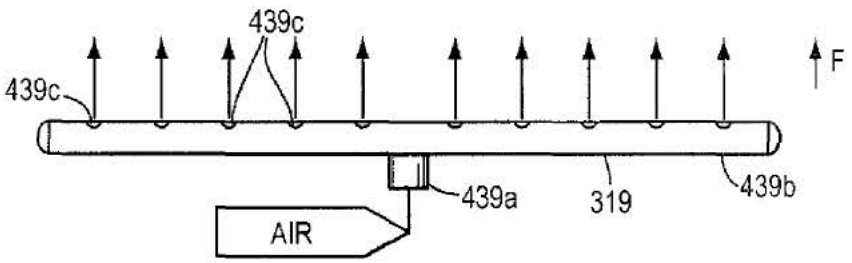
439c
439c
F
439a
319
439b
AIR

FIG. 17

FIG. 18

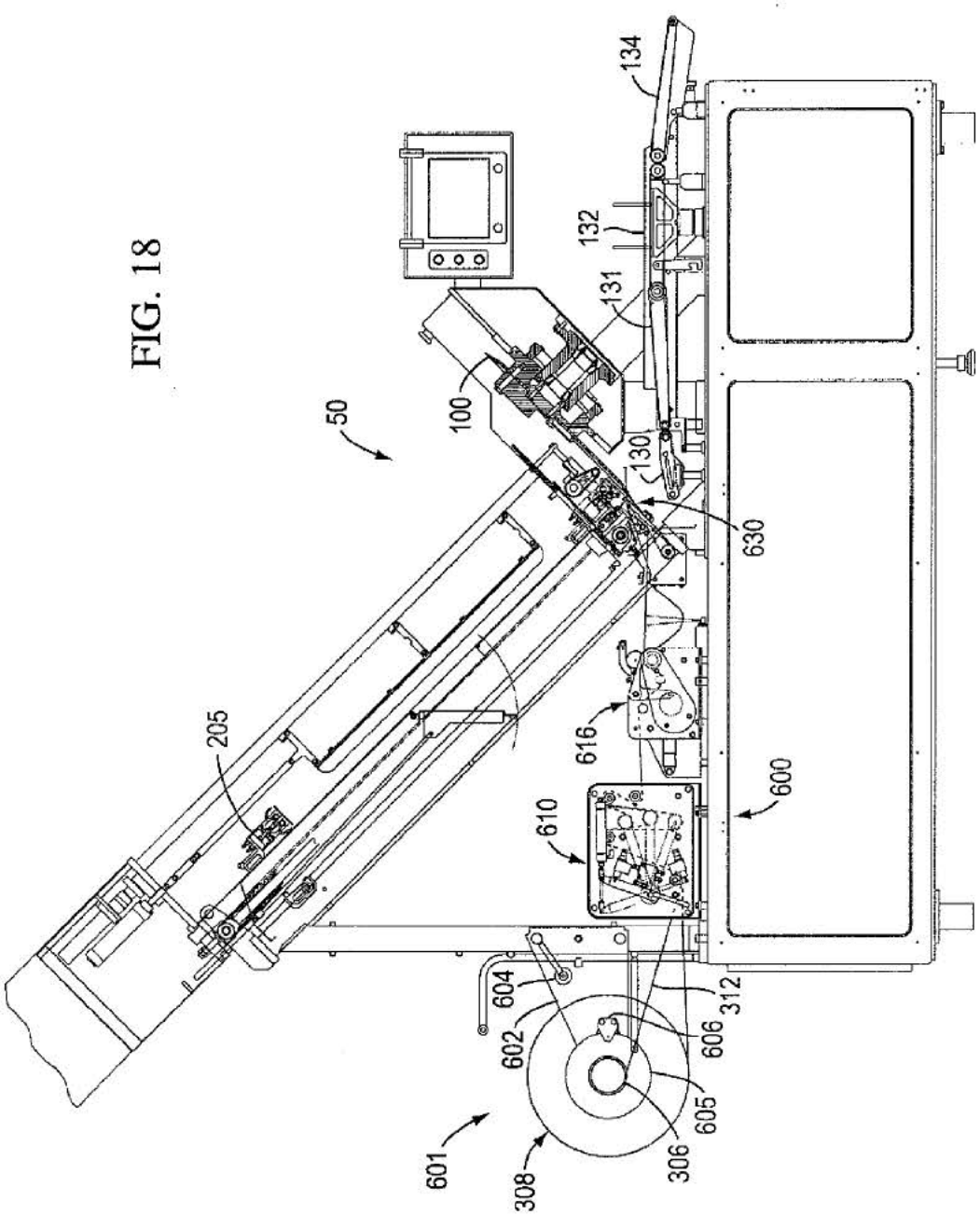
50
100
130
131
132
134
630
616
610
600
205
604
602
606
312
605
306
601
308

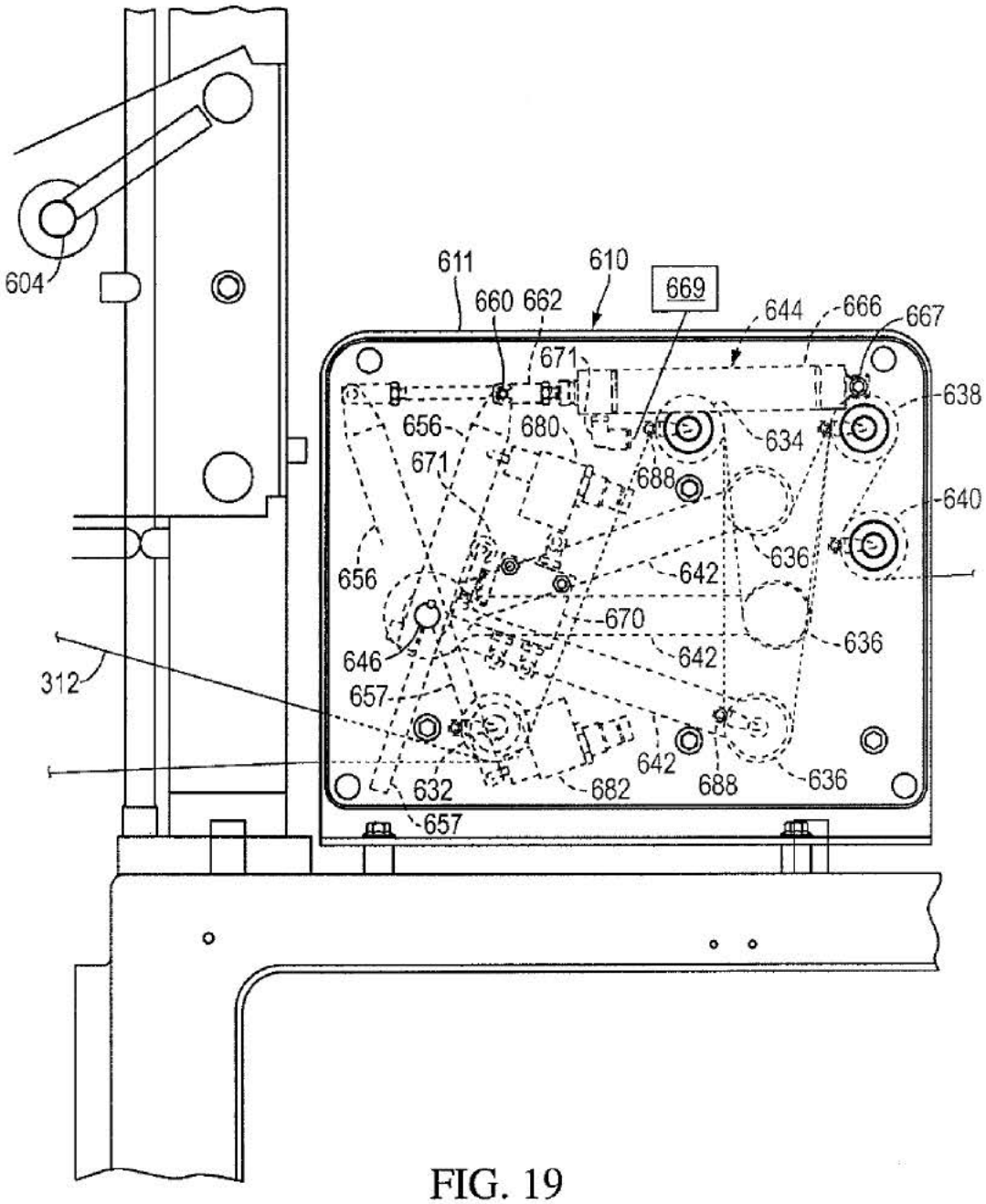
604
611
610
660
662
669
644
666
667
671
638
656
680
634
671
688
640
656
642
636
670
646
642
636
312
657
642
632
682
688
636
657

FIG. 19

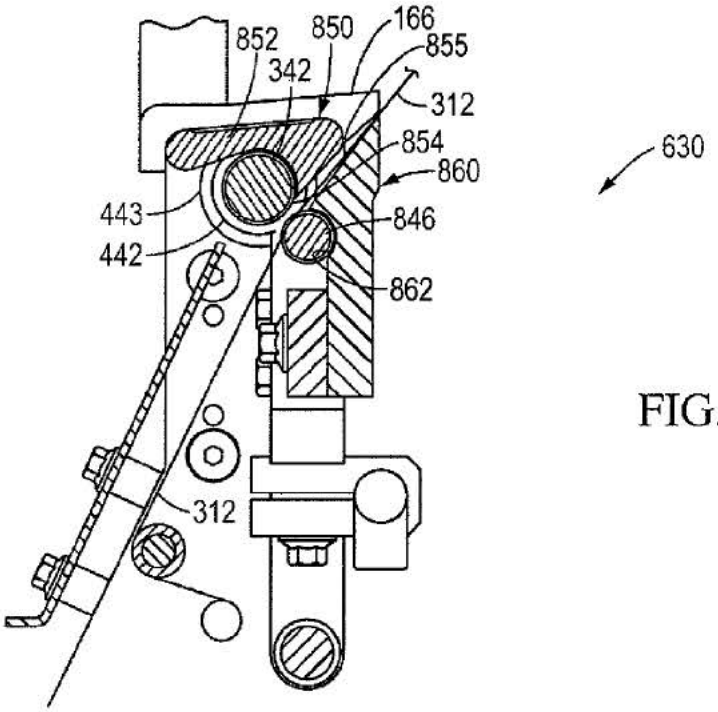

FIG. 23A

FIG. 19A

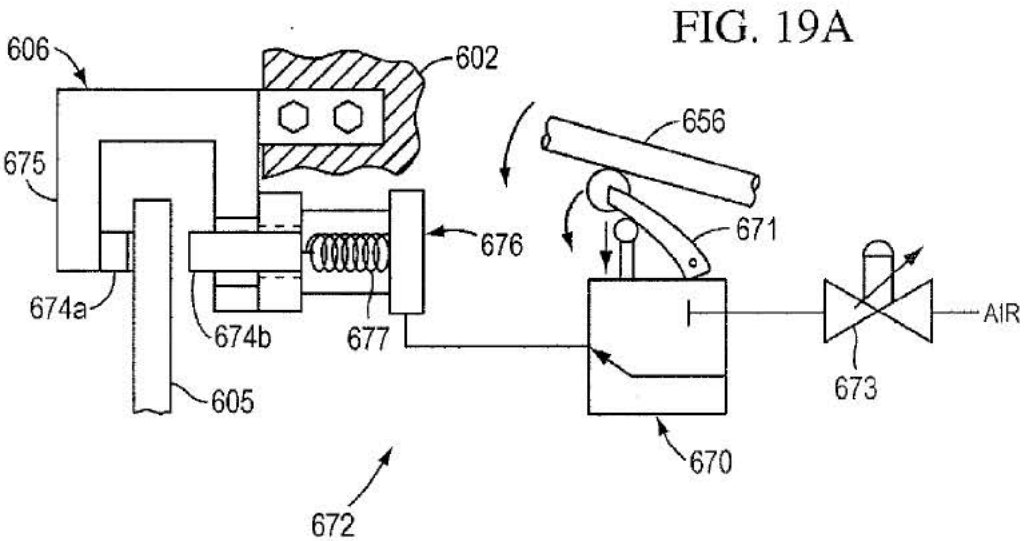

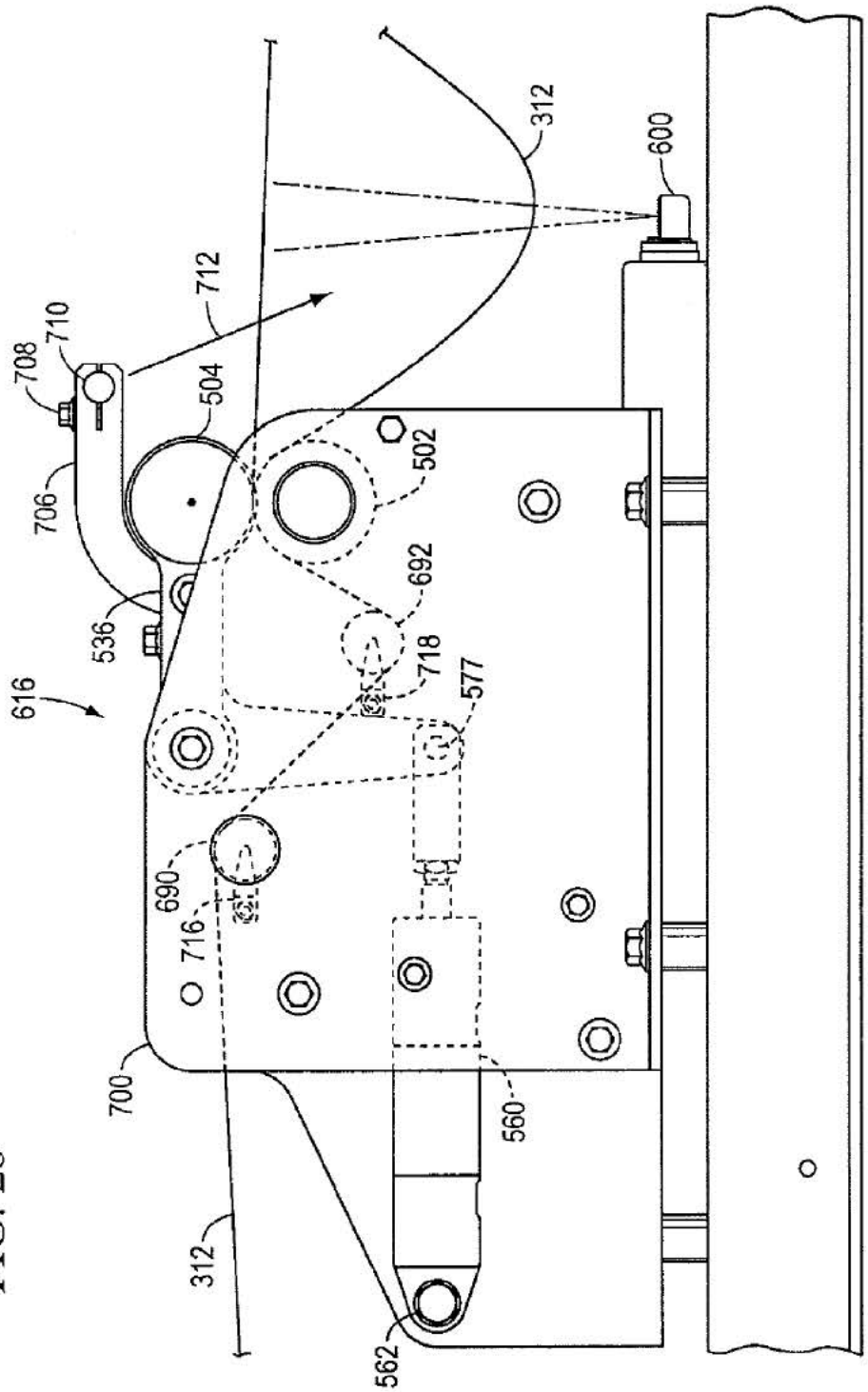
312
600
712
710
708
504
502
706
692
536
718
577
616
690
716
700
560
312
562

FIG. 20

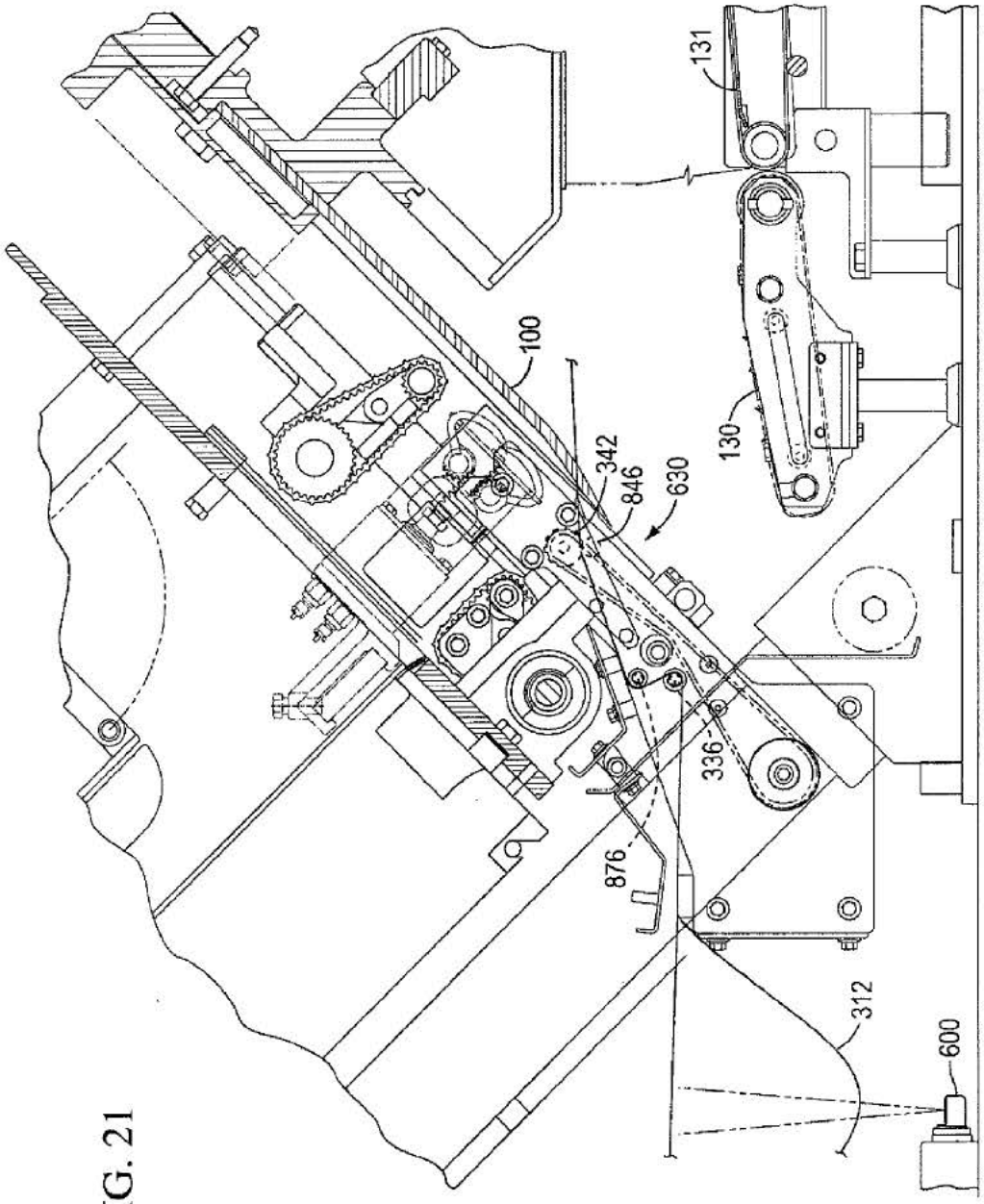

FIG. 21

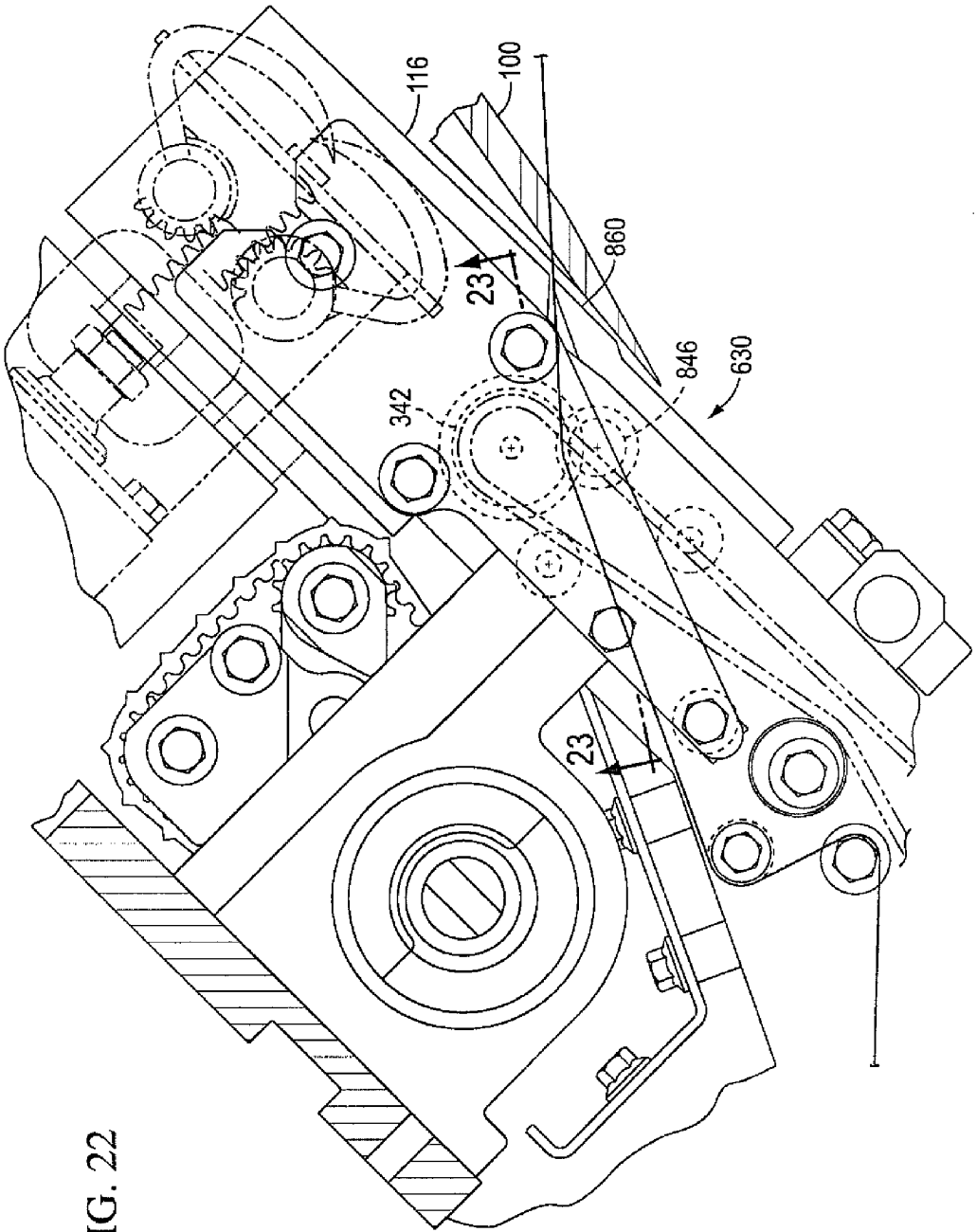

FIG. 22

FIG. 23

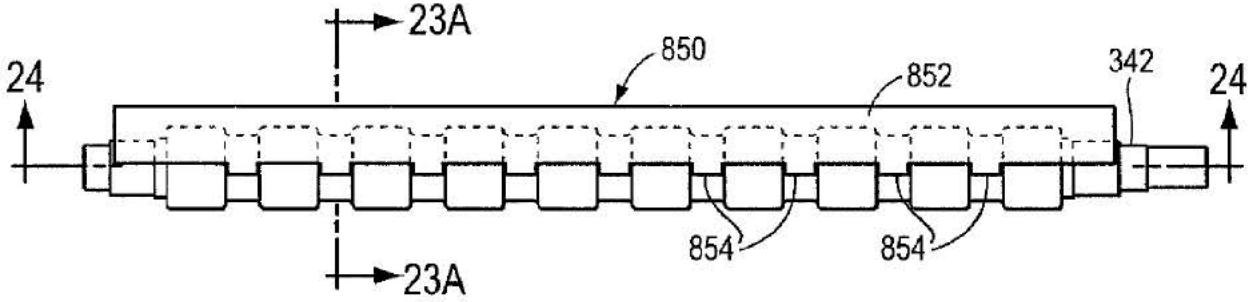

FIG. 24

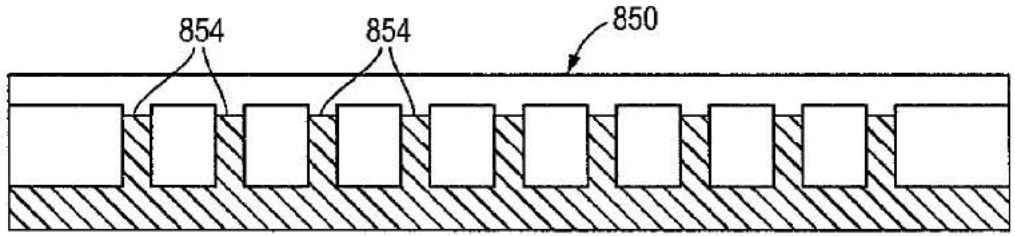

FIG. 25

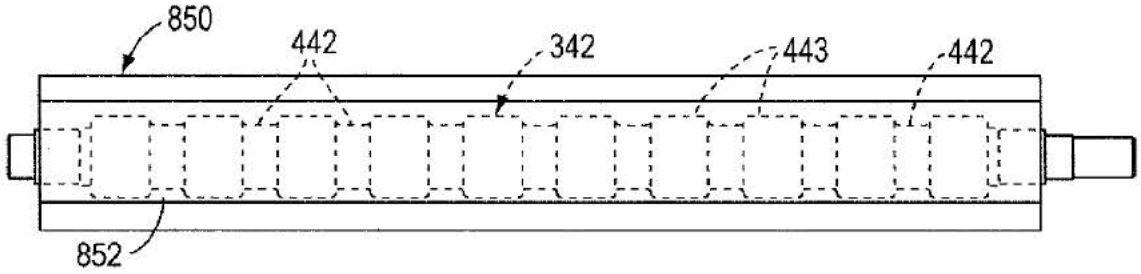

FIG. 26

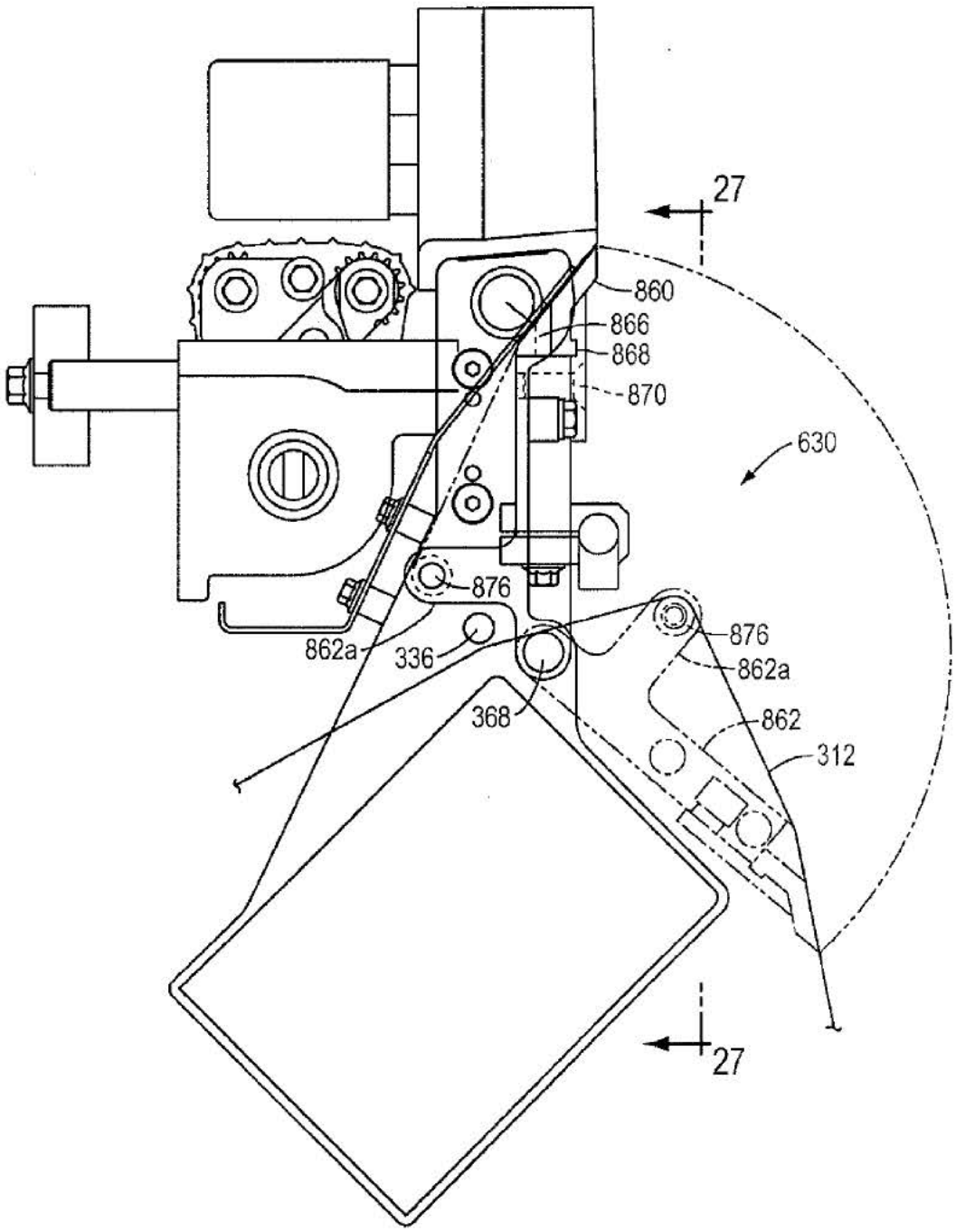

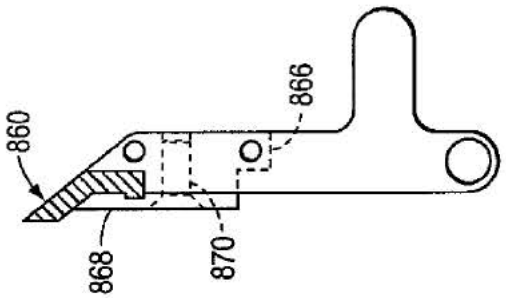

FIG. 28

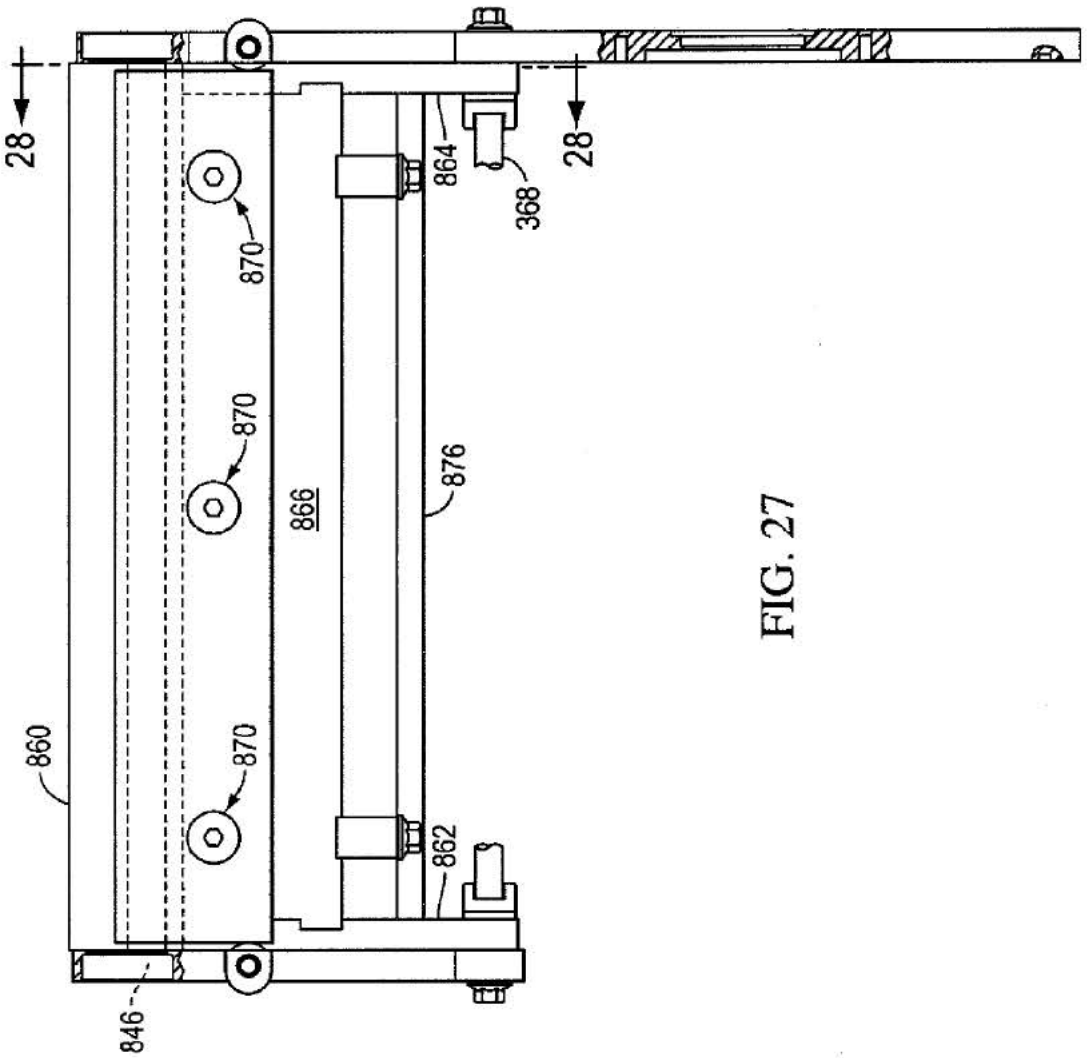

FIG. 27

SHEET INTERLEAVER FOR SLICING APPARATUS

CROSS REFERENCE TO RELATED APPLICATIONS

This application is a Section 371 National Stage Application, which claims the benefit of priority from PCT International Application No. PCT/US2006/041616, filed Oct. 25, 2006, which claims the benefit of priority from Provisional Application Ser. No. 60/730,304, filed Oct. 26, 2005 and from Provisional Application Ser. No. 60/729,958 filed Oct. 25, 2005, all of which applications are incorporated by reference herein in their entirety.

BACKGROUND OF THE INVENTION

Food loaves come in a variety of shapes (round, square, rectangular, oval, etc.), cross-sections, and lengths. Such loaves are made from various comestibles, such as meat, cheese, etc. Most loaves are provided to an intermediate processor who slices and packages the products in groups for retail.

A variety of machines have been developed to slice such loaves. Such machines include the FX180™ or the FX Plus™ slicing machines available from Formax, Inc., of Mokena, Ill., USA. The FX180™ and the FX Plus™ machines are high speed food loaf slicing machines that slice one, two, or more food loaves simultaneously using one cyclically driven slicing blade. Independent loaf feed drives are provided so that slices cut from one loaf may vary in thickness from slices cut from the other loaf. The machines include a slicing station that is enclosed by a housing, except for a limited slicing opening. The slicing blade is disposed in the slicing station and a drive rotates the slicing blade at a predetermined cyclical rate on a cutting path through a slicing range that intersects the food loaves as they are fed into the slicing station.

In the foregoing machines, the food loaf slices are received in groups of predetermined weight on a receiving conveyor that is disposed adjacent the slicing blade. The receiving conveyor receives the slices as they are cut by the slicing blade. In many instances, neatly aligned stacked groups are preferred and, as such, the sliced product is stacked on the receiving conveyor before being transferred from the machine. In other instances, the groups are shingled so that a purchaser can see a part of every slice through a transparent package. In these other instances, conveyor belts of the receiving conveyor are gradually moved during the slicing process to separate the slices.

Paper interleaving mechanisms used in conjunction with cutting machines are disclosed in U.S. Pat. Nos. 6,752,056 and 4,583,435. According to these patents, slabs of product such as cheese are oriented angularly with respect to a horizontal conveyor and are fed downwardly into a slicing plane defined by a moving slicing blade. A roll of web material such as paper is arranged beneath the slab and has a length of web continuously fed toward and beneath a cut face of the slab such that when the cutting blade slices a slice from the slab the cutting blade simultaneously slices off a leading end portion of the web, forming a sheet. The sheet with the overlying slice fall to the conveyor or onto a previously cut slice already deposited onto the conveyor to form a stack. The web is continuously fed such that successive sheets are interleaved with successive cut slices.

Both of these patents described the use of air jets to assist in coupling the lead end portion of the web to the front face of the slice to be cut. Both of the patents incorporate driven rollers to dispense the web from a roll of web material.

The present inventors have recognized that it would be desirable to improve the reliability of the placement of sheets for interleaving with product slices, particularly for high-speed slicing operations.

SUMMARY OF THE INVENTION

The present invention provides an improved web dispensing arrangement for interleaving sheets with sliced food product. The invention pertains to high-speed slicing machines wherein web material is dispensed in synchronism with the slicing operation and the leading end portion of the web material is arranged on a downstream side of the cut face of the product and the remaining portion of the web material is arranged on an opposite side of the cutting plane than the leading end portion such that the slicing blade slices not only the product but the leading end portion of the web material. The cut leading end portion of the web material forms a sheet that fronts the cut slice and both fall to a conveyor or onto a stack previously deposited on the conveyor. Thus a stack of interleaved slices and sheets can be formed and conveyed away for packaging.

According to one aspect of the invention, a sheet interleaver is provided for a slicing machine that includes a slicing plane for slicing an elongated food product and a sheet from web material beneath the elongated product. The interleaver includes a supply of web material, a drawing station, a feed station, and a controller. The drawing station has a first driver for drawing web material from the supply. The feed station has a second driver for receiving web material from the drawing station and driving the web material through a cutting nip into the slicing plane. The controller is in signal-communication with at least one of the first and second drivers to drive web material at select differential speeds by the first and second drivers such that tension between the drawing station and the feed station is controlled.

Preferably, the tension is controlled by the controller to allow a slackened length of web material between the drawing station and the feed station that is greater than a straight line distance of the web material spanning between the drawing station and the feed station.

As a further aspect of the invention, a tensioning station is provided between the supply of web material and the drawing station such that tension of the web material between the drawing station and the supply is controlled.

As a further aspect of the invention, a sensor is provided that senses the slackened length of web material between the drawing station and the feed station and is in signal-communication with the controller to adjust the differential speed of the first and second drivers to maintain the slackened length at a pre-selected amount.

As a further aspect of the invention a pressurized air dispenser is provided that is configured to direct an air stream onto a side of the slackened length to maintain a tension on the slackened length of web material.

As a further aspect of the invention, the second driver comprises opposing rollers wherein at least one of the rollers is motor driven and the rollers are pressed together with a resilient interface and roll in opposite directions to form a pinch nip for receiving and driving the web material.

Preferably, the resilient interface is discontinuous along a lateral direction of the pinch nip, wherein one of the opposing rollers comprises annular recesses spaced apart along the lateral direction and a respective other of the opposing rollers has a smooth annular surface. A comb plate is provided hav-

ing a base portion fixed in close proximity to the pinch nip. The comb plate has finger portions that fit into the recesses, the comb plate configured to prevent the web material from wrapping around the one roller. Also, a bottom deflecting surface can be provided. The bottom deflecting surface fixed in position in close proximity to the pinch nip and having a portion that partially curves around the other roller, the deflecting surface plate configured to prevent the web material from wrapping around the other roller.

According to another aspect of the invention, a web dispensing apparatus is arranged on a slicing machine having a drive roller and a pinch roller with the web material fed therebetween. The drive roller and the pinch roller rotate in opposite directions to drive an extended end portion of the web material through a cutting nip. The lower frame member rotatably mounts one of the drive roller and pinch roller. An upper frame member mounts the other of the drive roller and pinch roller. The lower frame member is pivotally mounted to the upper frame member. The cuffing nip includes a lower edge of the plastic loaf guide mounted to the upper frame member and a plastic cutting edge mounted to the lower frame member. Pivoting the lower frame member away from the upper frame member opens the cutting nip and the space between the drive and pinch rollers to allow the web material to be threaded between the drive and pinch rollers and through the cutting nip.

The drive roller is driven by a servomotor. The servomotor drives the web material in a closely controlled and precise manner. The servomotor can be controlled to interleave a sheet between every cut slice or only interleave sheets between some cut slices but not others, such as between every other cut slice. Alternatively, the servomotor can be controlled to interleave a sheet between every cut slice for a number of slices and then change to interleave sheets less frequently, such as allowing a group of slices to be accumulated without sheets and then interleaving the next group of slices with sheets. The servomotor and associated control allows a great flexibility on the pre-programmed selection of interleaving slices without manual intervention.

According to another aspect of the invention, the web material is dispensed by opposing rollers that not only drive the end portion through the cutting plane but also bend the end portion into a corrugated cross-section. The corrugated cross-section stiffens the web material to project forwardly in cantilever fashion, from the drive rollers without drooping. The corrugated cross-section increases the beam strength of the cantilevered end portion of the web material.

The end portion projects from the corrugated cross-section through the cutting nip and is substantially flattened in the cutting nip. It is advantageous that the corrugation not be present outside the cutting nip to a significant degree if an undulating cut edge of the end portion is not desired.

Numerous other advantages and features of the present invention will become readily apparent from the following detailed description of the invention and the embodiments thereof, from the claims and from the accompanying drawings.

BRIEF DESCRIPTION OF THE DRAWINGS

FIG. **1** a perspective view of a high-speed slicing apparatus incorporating the sheet interleaving mechanism of the present invention;

FIG. **2** is a diagrammatic sectional view of the slicing apparatus of FIG. **1**;

FIG. **3** is a fragmentary sectional view taken generally along line **3-3** of FIG. **2**;

FIG. **4** is a fragmentary side view taken along line **4-4** of FIG. **3**;

FIG. **5** is a fragmentary side view taken along line **5-5** of FIG. **3**;

FIG. **6** is a fragmentary, enlarged view taken from figure three;

FIG. **7** is a fragmentary perspective view of the interleaving mechanism of FIG. **2** shown in an operating condition;

FIG. **8** is a fragmentary perspective view of the interleaving mechanism of FIG. **7** shown in an open, refill condition;

FIG. **9** is a fragmentary, enlarged elevational view of a portion of the interleaving mechanism shown in FIG. **2**;

FIG. **10** is a rear elevational view of the portion shown in FIG. **9**;

FIG. **11** is a right side view of the portion shown in FIG. **9** taken generally along line **11-11** of FIG. **9**;

FIG. **12** is a sectional view taken generally along line **12-12** of FIG. **9**;

FIG. **13** is a sectional view taken generally along line **13-13** of FIG. **9**;

FIG. **14** is a left side view of the portion shown in FIG. **9** taken generally along line **14-14** of FIG. **9**;

FIG. **15** is a fragmentary sectional view taken generally along line **12-12** of FIG. **9** with portions removed for clarity;

FIG. **16** is a schematic control diagram;

FIG. **17** is a schematic, fragmentary sectional view taken generally along line **17-17** of FIG. **4**;

FIG. **18** is a diagrammatic sectional view of the slicing apparatus of FIG. **1** incorporating an alternate embodiment sheet interleaving mechanism of the invention;

FIG. **19** is an enlarged diagrammatic sectional view of a tension controlling station of the sheet interleaving mechanism of FIG. **18**;

FIG. **19**A is a schematic diagram of a spool tension control system of the invention;

FIG. **20** is an enlarged diagrammatic sectional view of an unwinding station of the sheet interleaving mechanism of FIG. **18**;

FIG. **21** is a fragmentary enlarged view of a feed station of the sheet interleaving mechanism of FIG. **18**;

FIG. **22** is a further enlarged view of the feed station of the sheet interleaving mechanism of FIG. **21**;

FIG. **23** is a sectional view taken generally along line **23-23** of FIG. **22**;

FIG. **23**A is a sectional view taken generally along line **23**A-**23**A of FIG. **23**;

FIG. **24** is a sectional view taken generally along line **24-24** of FIG. **23**;

FIG. **25** is a top view of FIG. **23**;

FIG. **26** is a sectional view similar to FIG. **22** but showing the feed station of FIG. **22** in an open configuration;

FIG. **27** is a view taken generally along line **27-27** of FIG. **26**; and

FIG. **28** is a sectional view taken generally along line **28-28** of FIG. **27**.

DETAILED DESCRIPTION OF THE PREFERRED EMBODIMENT

While this invention is susceptible of embodiment in many different forms, there are shown in the drawings, and will be described herein in detail, specific embodiments thereof with the understanding that the present disclosure is to be considered as an exemplification of the principles of the invention and is not intended to limit the invention to the specific embodiments illustrated.

FIG. **1** illustrates one embodiment of a food loaf slicing machine **50** that may incorporate the sheet interleaver of the present invention. The slicing machine can be a high speed slicing machine such as disclosed in U.S. Pat. Nos. 6,484,615; 5,628,237; 5,649,463; 5,704,265; 5,724,874; herein incorporated by reference, or as commercially available as a FX180™, FXPlus™ or SNS® slicing machine and/or system available from Formax, Inc. of Mokena, Ill., USA.

Slicing machine **50** comprises a base **51** that is mounted upon four fixed pedestals or feet **52** (three of the feet **52** appear in FIG. **1**) and has a housing or enclosure **53** surmounted by a top **58**. Base **51** typically affords an enclosure for a computer **54**, a low voltage supply **55**, a high voltage supply **56**, and a scale mechanism **57**. Base enclosure **53** may also include a pneumatic supply or a hydraulic supply, or both (not shown).

The slicing machine **50** may include a conveyor drive **61** utilized to drive an output conveyor/classifier system **64**.

The slicing machine **50** of the illustrated embodiment further includes a computer display touch screen **69** in a cabinet **67** that is pivotally mounted on and supported by a support **68**. Support **68** is affixed to and projects outwardly from a member **74** that constitutes a front part of the housing of slicing station **66**.

The upper right-hand portion of slicing machine **50**, as seen in FIG. **1**, comprises a loaf feed mechanism **75** which, in machine **50**, includes a manual feed from the right-hand (far) side of the machine and an automated feed from the left-hand (near) side of the machine. Loaf feed mechanism **75** has an enclosure that includes a far-side manual loaf loading door **79** and a near-side automatic loaf loading door **78**.

Referring first to conveyor/classifier system **64** at the left-hand (output) end of slicing machine **50** as illustrated in FIG. **2**, it is seen that system **64** includes an inner stacking or receiving conveyor **130** located immediately below slicing station **66**. Conveyor **130** is sometimes called a "jump" conveyor. From conveyor **130** groups of food loaf slices, stacked or shingled, are transferred to a decelerating conveyor **131** and then to a weighing or scale conveyor **132**. From the scale conveyor **132** groups of food loaf slices move on to an outer classifier conveyor **134**. On the far side of slicing machine **50** the sequence is substantially the same.

Slicing machine **50** may further include a vertically movable stacking grid comprising a plurality of stack members joined together and interleaved one-for-one with the moving elements of the inner stack/receive conveyor **130**. Stacking grid can be lowered and raised by a stack lift mechanism. Alternatively, food loaf slices may be grouped in shingled or in stacked relationship directly on the receive/stack conveyor **130**, with a series of stacking pins replacing the grid. When this alternative is employed, lift mechanism is preferably connected directly to and is used for vertical positioning of conveyor **130**.

Loaf feeding mechanism **75** preferably includes a back-clamp **205** respectively associated with each food loaf. The back-clamps **205** secure the rear portion of each loaf and assist in advancing each loaf at individually determined rates into the slicing station **66**. The loaf feeding mechanism **75** also preferably comprises a system of short conveyors for advancing food loaves from loaf feed mechanism **75** into slicing station. FIG. **2** shows a short lower loaf feed conveyor **163**. The short lower conveyor **163** is located immediately below a short upper feed conveyor **165**. A loaf cutting guide **166** (FIG. **3**) is disposed adjacent the conveyors **163**, **165** with a recess **167** for guiding the loaf to the blade.

The slicing machine **50** of FIG. **1** is shown in a state ready for operation. There is a food loaf **91** on tray **85**; waiting to be loaded into loaf feed mechanism **75** on the near-side of machine **50**. Machine **50** produces a series of stacks **92** of food loaf slices that are fed outwardly of the machine, in the direction of the arrow A, by conveyor classifier system **64**. Machine **50** also produces a series of stacks **93** of food loaf slices that move outwardly of the machine on its output conveyor system **64** in the direction of arrow A.

The loaf feed mechanism **75** drives the loaves into the slicing station where they are sliced by a rotating knife blade **100** (FIG. **2**) that is disposed at the output portions of the short conveyors. The thickness and total weight of the slices are controlled by computer **54** which actuates various mechanical components associated with the slicing operation. The slice thickness and total weight for each sliced group are programmed through the touch screen **67** which interfaces with computer **54**. As the blade slices the loaves, the slices are deposited on receiving conveyor **130** where the proper numbers of slices are either stacked or shingled. The receiving conveyor **130** then drives the groups from the slicing station for subsequent classifying and packaging.

The drive motor for the blade in slicing station **66** is preferably a D.C. variable speed servo motor mounted in the machine base **51**. The receiver lift mechanism is driven by a stacker lift motor, again preferably a variable speed D.C. servo motor. The loaf feed drive mechanism comprising the back-clamp **205** and the short loaf feed conveyors **163** and **165** is driven by a servo motor.

FIG. **2** illustrates the sheet interleave apparatus **300** of the present invention. For purposes of description, a single sheet interleaving apparatus is described for a slicing machine set up for slicing only one loaf. It should be understood that for a slicing machine that slices two or more side-by-side loaves, multiple sheet interleaving apparatuses **300** can be provided in a corresponding side-by-side arrangement.

The apparatus **300** includes a web material supply **301** such as a spool **306** for dispensing web material **312** from a roll **308**. The spool **306** is supported on a column **310** that allows the roll **308** to revolve to dispense web material **312**. The web material **312** extends from the roll **308** and is threaded through a web material drawing station such as an unwind station **316**. The web material extends from the unwind station **316** into a feed station **330**. The unwind station **316** is described in detail below.

FIGS. **3-8** illustrate the feed station **330** in more detail. The feed station **330** includes an idle roller **336** that deflects the web material **312** upwardly to be threaded through a roller drive that comprises a drive roller **342** and an opposing pinch roller **346**. The drive roller **342** is rotatably mounted at a first end thereof to a first support plate **352** and at a second end to a second support plate **354**. The support plates **352**, **354** are fixedly attached to the framework of the slicing machine. The support plate **352** extends downward to form a motor support portion **355** that mounts a servomotor or stepper motor **360**. The pinch roller **346** is rotatably mounted at a first end thereof to a first inside support plate **362** and at a second end to a second inside support plate **364**. The inside support plates **362**, **364** are spaced apart by a pinch roller axle **366**, a bridge plate **367** and a strut **368**. The strut **368** also acts as a pivot for the inside support plates **362**, **364**. The inside support plates **362**, **364** can be pivoted on the strut **368** to swing the pinch roller **346** from a working position (FIG. **7**) to an open, web material refill or maintenance position (FIG. **8**). A plastic cutting guide **370** is mounted to the bridge plate **367** beneath the pinch roller **346** and extends in an angular upward direction, when in the working position, from the inside support plates **362**, **364**. The plastic cutting guide **370** forms a cutting nip with the loaf guide **166**.

The servo motor **360** includes a housing **420** that is fastened to the motor support portion **355**. A motor output shaft is coupled to a drive pulley **424** (FIGS. **3** and **4**). The drive roller **342** includes a driven pulley **428**. A drive belt **432** is wrapped around the pulleys **424**, **428**. Thus the motor **360** when energized drives the drive roller to rotate. A belt tensioner **438** presses an outside surface of the belt **432** to maintain a proper tension of the belt on the pulleys.

FIGS. **4** and **17** illustrate a pressurized air manifold **439** that direct a plurality of air streams in the direction F toward the blade **100**. The manifold includes a tubular body **439***b* with an air inlet **439***a*. The tubular body is closed at opposite ends and includes a series of orifice outlets **439***c*, such as ten, which direct the air in the direction F.

As illustrated in FIG. **6**, the drive roller **342** includes a plurality of circumferential grooves or annular recesses **442** spaced apart by rings **443** along a length of the drive roller **342**. The pinch roller includes a plurality of circumferential shoulders or rings **448** that correspond in axial position to the grooves **442**. On a select group of the shoulders **448**, rubber drive rings **452** are applied, tightly gripping the outside surface of the respective shoulders **448**. When the inside support plates **362**, **364** are swung upward into working position, the shoulders **448** nest into the grooves **442**. The rubber drive rings **452** approach the radial bottom of the grooves to a close tolerance corresponding to a thickness of the web material **312**.

The web material **312** is pinched and bent to be forced into the grooves **442** and over and around the drive rings **452**. The web material **312** is bent into a corrugated shape in the region of the grooves **442**. This corrugated shape flattens out along a length of an extended end portion **312***a* in a forward direction as the extended end portion **312***a* exits a cutting nip **455** formed between a top edge **370***a* of the cutting guide **370** and a bottom edge **166***a* of the loaf guide **166** but is present sufficiently to provide an increased bending moment of inertia or beam strength to the extended end portion **312***a* that extends unsupported from the cutting nip **455**. This additional beam strength prevents the extended end portion **312***a* from drooping before the cut slice falls with the sheet cut from the extended end portion **312***a* onto the conveyor or onto a previously cut slice.

The support plates **352**, **354** are fixedly attached to machine brackets **453**, **454** respectively via plastic spacers **456**, **458** and an axle of the idle roller **336** between the plates **352**, **354**. The guide **166** is also fastened to and between the machine brackets **452**, **454**.

In operation, the web material **312** is driven forwardly by the drive roller **342** to a position where the extended end portion **312***a* of the web material having a length approximately equal to a height of the sliced product loaf or slab **470**. The air from the orifices **439***c* of the manifold **439** assist in holding the extended end portion **312***a* adjacent to the end of the loaf. The blade **100** slices through both the loaf **470** and the extended end portion **312***a* and a sheet formed of the extended end portion **312***a* and a slice **472** fall together onto the conveyor **130**, the sheet underlying the slice. The process is repeated for the next slice resulting in an interleaved stacking of sheets and slices.

FIGS. **9-15** illustrate the unwind station **316** for unwinding web material **312** from the roll **308**. The web material **312** is pinched between a drive roller **502** and a pinch roller **504**. The drive roller **502** is driven by a servomotor or stepper motor **506**. The servomotor **506** has an output shaft that rotates a drive pulley **510** that circulates a belt **512** that rotates a driven pulley **514** connected to the drive roller **502** (FIG. **12**). The drive roller **502** is mounted by bearings **516**, **518** between a front sidewall **520** and a rear sidewall **524**. The servomotor **506** is also mounted to the rear sidewall **524**. The sidewalls **520**, **524** are fastened to a top base of the machine cabinetry.

The pinch roller **504** is mounted by bearings **530**, **532** (FIG. **13**) to a front L-shaped lever **536** and a rear plate **538**. The lever **536** and the rear plate **538** are arranged substantially in parallel and connected to each other by a first strut **540** and a second strut **544**. The second strut **544** also rotationally connects the lever **536** and a rear plate **538** to the sidewalls **520**, **524** via bearings **550**, **552** (FIG. **11**).

A pneumatic cylinder **560** is pivotally fastened to the front sidewall **520** by a fastener **562**. The pneumatic cylinder **560** includes a cylinder body **566** that has pressurized air inlet/outlets **570**, **572** wherein pressurized air is selectively communicated to/from these inlets/outlets to move a piston (not shown) that acts on a actuator rod **576** extending from the cylinder body **566**. The actuator rod **576** is pivotally connected to a substantially vertical leg **536***a* of the L-shaped lever **536** at a pivot connection **577**. Pressurized air within the cylinder **560** can exert an extending force on the actuator rod **576** that will urge the lever **536** clockwise (FIG. **9**) about the strut **544** to cause in the pinch roller **504** to exert a clamping force on the web material **312** against the drive roller **502**. Given typical surrounding parameters, the pressure can be about 30 psig. The drive roller **502** includes an outer sleeve **502***a* and the pinch roller **504** includes an outer sleeve **504***a*, wherein the outer sleeves **502***a*, **504***a* are composed of a gripping material to effectively, frictionally, transport the web material **312** that is pinched therebetween.

The front wall **520** and the rear wall **524** are further braced by a plurality of struts **580**, **582**, **584**.

A typical configuration of a strut and strut connection of the station **316** is shown in FIG. **13**, demonstrated by the strut **584**. A typical strut includes a tubular body **588** that has an outside diameter greater than a hole **590** formed in each of the sidewalls **520**, **524**. The tubular body **588** includes tapped end holes **592**. Fasteners **594** insert through the holes **590** and are threaded tightly into the end holes **592**. The tubular body **588** is thus clamped tightly to an inside surface of the sidewalls **520**, **524**.

In operation, the servomotor **506** is a motor sized to unwind the roll **308** at a sufficient speed, such as a 20-500 RPM, 7.9 lb-in. motor. The servomotor **360** is sized to deliver the extended end portion **312***a* at a rapid rate for the succession of slices.

FIG. **16** illustrates in schematic form three degrees of slackness of the web material **312**, shown represented by the line or curves **312***b*, **312***c* and **312***d*. Without a sufficient slackness in the web material **312** upstream of the roller **342**, the delivery of the extended end portion **312***a* can be hampered during high speed operation. Additionally, too much slackness can hamper the delivery of the extended end portion **312***a*. The line **312***b* representing zero accumulation, and the parabola **312***c* representing maximum accumulation, represent the desired limits of operation. The intermediate parabola **312***d* represents a preferred operating condition.

A sensor **600** is used to sense the slackness, or accumulation, of the web material **312** between the rollers **342** and **502**. The sensor can be an ultrasonic sensor, an optical sensor, such as a laser or photoeye, or other type of sensor. The sensor **600** can project an ultrasonic or optical beam signal upwardly. The sensor **600** communicates the web material lowest position, for example the lowest positions on the line or curves **312***b*, **312***c* or **312***d* with the machine control or computer **54** which is in signal-communication with the servomotors **360**, **506**. If the slackness approaches the condition **312***b*, the motor **506** can be increased in speed to unwind material at a greater rate.

If the slackness condition approaches condition **312***c* the motor **506** can be slowed. The speed of the motor **360** could also be adjusted in coordination with the slicing speed, if desired, to adjust the slackness.

FIG. **18** illustrates an alternate embodiment sheet interleave apparatus **600** of the present invention. This embodiment is identical to the sheet interleave apparatus **300** except as noted. Identical reference numbers indicate like components.

The apparatus **600** includes a modified web material supply **601** that includes the spool **306** for dispensing web material **312** from a roll **308**. The spool **306** is supported on a bracket **602** that allows the roll **308** to revolve to dispense web material **312**. A non-contact sensor **604**, such as an ultrasonic or optical sensor senses the diameter of the roll **308** and communicates to machine control or to an alarm when the roll is depleted.

The spool **306** is fixed to a disc **605** to rotate therewith. A disc brake assembly **606** is fixed to the bracket **602** and is selectively engageable to the disc **605** to stop the disc **605** and spool **306** from rotating as described below.

The web material **312** extends from the roll **308** and is threaded through a tension control station **610** and then to a draw station such as an unwind station **616**. The web material **312** extends from the unwind station **616** into a feed station **630**. The unwind station **616** is described in detail below.

FIG. **19** illustrates the tension control station **610** in more detail. The station **610** includes a housing or frame **611**. The web material **312** is first threaded around a first fixed lower idle roller **632** and is then directed upward to wrap around a first upper fixed idle roller **634**. The web material **312** is then directed downward to wrap a dancer roller **636** and then directed upward to wrap a second upper fixed idle roller **638**. The web material **312** is then directed downward to wrap a second lower fixed idle roller **640** and then directed substantially horizontally out of the station **610**. The dancer roller **636** is mounted on a lever **642** that can be pivoted about a pivot attachment **646** to the frame **611** of the station **610**. A lever arm **656** is clamped and pinned to the lever **642** to rotate therewith. The lever arm **656** includes a tail portion **657** below the attachment **646**. The rollers **632**, **634**, **638**, and **640** are all rotatably attached to the frame **611**.

The lever arm **656** is rotatably attached at connection **660** to an extendable rod **662** of a pneumatic actuator **664**. The pneumatic actuator **664** includes a cylinder **666** that is pinned at connection **667** to the frame **611**. Controlled pneumatic pressure delivered into the cylinder **666** extends or retracts the rod **662**. Pressurized air is pneumatically connected by a circuit to the cylinder **666**. The circuit includes a pressure compensating pressure regulator **669** (shown schematically) delivering pressurized air into an inlet **671** to maintain a consistent pressure in the pneumatic cylinder **666** regardless of the travel of the rod **662**. The air pressure within the cylinder **666** urges the rod **662** to the right in the figure. Given typical surrounding parameters, this pressure can be about 12 psig. This consistent force on the arm **656** creates a consistent tension in the web material **312** by the downward force from the dancer roller **636** on the web material **312** caused by torque on the arm/lever assembly **656**, **642** from the actuator **664**. End-of-travel shock absorbers **680**, **682** are contacted and engaged by extreme positions of the lever arm **656** or the tail portion **657**. These shock absorbers **680**, **682** cushion the end of travel of the arm **656** and tail portion **657** resulting in better tension control. Two extreme positions of the components **662**, **656**, **657**, **642**, **636** are shown. An intermediate, normal position of the components **642**, **636** is also shown.

Additionally, grounding tabs **688** are applied to the idle rollers to eliminate any static buildup produced during the feeding of the web material **312** over metal rollers. Static buildup can have a negative effect on any solid-state machine controls.

A manually activated valve **670** is provided within the frame **611**. This valve includes a switch arm or lever **671** that is located to be triggered when the lever arm **656** reaches close to its extreme clockwise rotation, when the rod **662** is drawn to an extreme position to the right, fully retracted into the cylinder **666**, and the dancer roller **636** is located at a low position. The valve **670** is pneumatically connected to a source of pressurized air and to the disc brake assembly **606** of the web material supply **601** as shown in FIG. **19**A.

FIG. **19**A illustrates a spool control circuit **672**. The valve **670** of the tensioning station is connected to a supply of pressurized air. Preferably, a pressure regulator **673** delivers pressurized air into the valve **670**. The valve **670** is configured to be normally closed, such as by a spring, blocking air flow through the valve **670**. The disc brake assembly **606** of the web material supply **601** includes opposing brake pads **674***a*, **674***b* that are carried by a housing **675**. The pad **674***b* is movable toward and away from the disc **605** by a pneumatic cylinder actuator **676**. The outlet of the valve **670** is pneumatically connected to the actuator **676**. When the lever arm **656** pushes the lever or switch arm **671** the valve **670** is opened, and the actuator **676** receives pressurized air from the valve **670**. The force of the pressurized air within the actuator **676** causes the pad **674***b* to overcome the urging of a spring **677** that urges the pad **674***b* away from the disc **605**, to clamp the pads **674***a*, **674***b* onto the disc **605** to stop spinning of the spool. The dancer roller **636** will begin to rise from tension force from the web material **312** and the lever arm **656** will disengage the switch arm or lever **671** which will close the valve **670**. The spring **677** will move the pad **674***b* away from the disc **605** and the disc **605** will be free to spin and dispense more web material **312**. The dancer roller **636** will begin to fall until the lever arm **656** once again opens the valve **670** and the process repeats.

The valve **670** can be a solenoid electric/pneumatic type valve wherein the switch arm **671** is an electrical switch, or it can be a pneumatic valve wherein the lever **671** is a mechanical valve actuator.

Although the described control system provides for an oscillating movement of the dancer roller **636** and an oscillating engagement of the brake **606**, it is encompassed by the invention that a set-point type control of the dancer roller position could be employed wherein the braking force on the disc is substantially continuous but modulated in force or duration to keep the dancer roller **636** at a desired position or within a desired range of positions.

FIG. **20** illustrates the web material draw station or unwind station **616**. The unwind station **616** includes modifications to the previously described unwind station **316**. Particularly, the web material **312** entering the unwind station is wrapped around an upper fixed idle roller **690** and then a lower fixed idle roller **692** which are mounted to a station frame **700**. After the lower fixed idle roller **692**, the web material **312** is wrapped around the driven roller **502**. By the use of the two idle rollers **690**, **692**, the web material **312** can be wrapped around the driven roller **502** to a greater extent for more traction and control.

Also, a bracket **706** is mounted to the lever **536** and extends to a clamp arrangement **708**. An air dispensing tube **710** is mounted to the bracket **706** and is configured to have orifices to dispense pressurized air in one or more streams **712** directed downward into the web material **312** that is located

between the unwind station **616** and the feed station **630**. Impingement or pressure from the streams **712** causes a slight tension in the slackened web material **312** to enhance the controllability and functionality of the sensor **600**. The slight tension results in a uniform tension of the web material **312** to the feed station **630**.

Additionally, grounding tabs **716**, **718** are applied to the idle roller **690**, **692** to eliminate any static buildup produced during the feeding of the web material **312** over metal rollers. Static buildup can have a negative effect on any solid-state machine controls.

FIGS. **21-25** illustrate the modified feed station **630** compared to the prior described feed station **330**. The pinch roller **346** of the prior described embodiment is replaced with a pinch roller **846** having a resilient outer layer for interaction with the web material **312** pinched between the drive roller rings **443** and the pinch roller **846**. The pinch roller **846** can have the resilient outer layer over the entire length or only located at the rings **443** of the driven roller **342**.

A scraper or comb plate **850** is mounted stationary in close proximity to the driven roller **342**. The comb plate has a base **852** and finger portions **854**. The finger portions **854** are spaced apart to correspond to the positions of the grooves or recesses **442**. The fingers **854** each proceed into a groove **442** as shown in FIG. **23**A. The fingers **854** act to separate the web material **312** from the surface of the driven roller **342** and direct the web material **312** straight into an alternate cutting nip **855**. A modified shearbar or cutting guide **860** can have a curved, concave groove **862** that forms a deflecting surface that closely conforms to the pinch roller **846** to also help separate the web material **312** from the pinch roller **846** and direct the web material **312** straight into the cutting nip **855**. The cutting nip **855** is defined between the loaf guide **166** and the comb plate **850**, and the cutting guide **860**.

FIGS. **26-28** illustrate further aspects of the modified feed station **630**. The feed station **630** is shown in both the closed (solid) and open positions (dashed). The open position is for the purpose of initially threading the web material **312** between the elements of the cutting nip **855** and between the rollers **342**, **846**. The cutting guide **860** is mounted to opposite inside support plates **862**, **864** by being clamped between a bridge plate **866** that is fastened to the support plates **862**, **864**, and a clamp plate **868**. Three fasteners **870** clamp the clamp plate **868** to the bridge plate **866**, capturing the shear bar **860**, which can be dovetailed into the clamp plate **870**. To replace the shearbar **860**, when the feed station **630** is opened, the fasteners **870** are loosened. This loosens the clamp plate **868** and the shearbar **860** can be slid out to the side. For simplicity, the concavity **862** is not shown in FIG. **28**. Also, the pinch roller **846** spans between and is rotatably mounted to the support plates **862**, **864**.

As shown in FIG. **27**, the support plates **862**, **864** include perpendicular arms **862***a*, **864***a* that rotatably mount opposite ends of an idle roller **876**. The idle roller **876** is an additional roller compared to the prior described feed station **330**. When in the open condition, the web material **312** is pulled over the idle roller **876** and over the shearbar **860**. When closed, the shearbar **860** forms the cutting nip with the loaf guide **116**, the rollers **342**, **846** pinch the web material **312**, and the idle roller **376** wraps the web material **312** and directs the web material over the idle roller **336**.

Numerous modifications may be made to the foregoing system without departing from the basic teachings thereof. Although the present invention has been described in substantial detail with reference to one or more specific embodiments, those of skill in the art will recognize that changes may be made thereto without departing from the scope and spirit of the invention as set forth in the appended claims.

The invention claimed is:

1. A sheet interleaver for a slicing machine that provides a slicing plane for slicing an elongated food product and a sheet from web material beneath said elongated product, comprising:

a supply of web material;

a drawing station having a first driver for drawing web material from said supply;

a feed station having a second driver for receiving web material from said drawing station and driving said web material through a cutting nip into said slicing plane;

a controller in signal-communication with said first and second drivers to drive web material at select differential speeds by said first and second drivers such that tension of the web material between said drawing station and said feed station is controlled; and

a non-contact sensor that senses tension of web material between said drawing station and said feed station and is in signal-communication with said controller to adjust the differential speed of said first and second drivers to maintain said tension within a pre-selected range.

2. The sheet interleaver according to claim **1**, wherein said tension is controlled by said controller to allow a slackened length of web material between said drawing station and said feed station that is greater than a straight line distance of the web material spanning between said drawing station and said feed station.

3. The sheet interleaver according to claim **2**, further comprising

a tensioning station between said supply and said drawing station such that tension of said web material between said drawing station and said supply is controlled.

4. The sheet interleaver according to claim **1**, wherein said supply comprises a roll of web material on a spool.

5. The sheet interleaver according to claim **4**, wherein said supply comprises a non-contact sensor that sends a signal to said controller corresponding to the amount of web material on said spool.

6. The sheet interleaver according to claim **1**, further comprising

a tensioning station between said supply and said drawing station such that tension of said web material between said drawing station and said supply is controlled, wherein said tensioning station comprises a dancer roller mounted on a pivotable lever and a urging device that exerts a controllable force on said lever.

7. The sheet interleaver according to claim **6**, wherein said urging device comprises a pneumatic cylinder actuator having a body and an extendable cylinder rod, one of said body and said rod fixed in position and the respective other of said body and said rod connected to said lever.

8. The sheet interleaver according to claim **1**, wherein said tension is controlled by said controller to allow a slackened length of web material between said drawing station and said feed station that is greater than a straight line distance of the web material spanning between said drawing station and said feed station; and

wherein said non-contact sensor senses the slackened length of web material between said drawing station and said feed station and is in signal-communication with said controller to adjust the differential speed of said first and second drivers to maintain said slackened length at a pre-selected amount.

9. A sheet interleaver for a slicing machine that provides a slicing plane for slicing an elongated food product and a sheet from web material beneath said elongated product, comprising:

a supply of web material;

a drawing station having a first driver for drawing web material from said supply;

a feed station having a second driver for receiving web material from said drawing station and driving said web material through a cutting nip into said slicing plane;

a controller in signal-communication with at least one of said first and second drivers to drive web material at select differential speeds by said first and second drivers such that tension of the web material between said drawing station and said feed station is controlled;

wherein said second driver comprises opposing rollers wherein at least one of said rollers is motor driven and said rollers are pressed together with a resilient interface and roll in opposite directions to form a pinch nip for receiving and driving said web material; and

wherein said resilient interface is discontinuous along a lateral direction of said pinch nip.

10. The sheet interleaver according to claim 9, wherein one of said opposing rollers comprises annular recesses spaced apart along said lateral direction and a respective other of said opposing rollers has annular rings that are arranged to fit within said annular recesses, wherein the interaction of said annular recesses and annular rings causes said web material driven by said pinch nip to assume a corrugated profile downstream of said pinch nip.

11. The sheet interleaver according to claim 9, wherein one of said opposing rollers comprises annular recesses spaced apart along said lateral direction and a respective other of said opposing rollers has a smooth annular surface.

12. The sheet interleaver according to claim 11, further comprising

a comb plate having a base portion fixed in close proximity to said pinch nip and finger portions that fit into said recesses, said comb plate configured to prevent said web material from wrapping around said one roller.

13. The sheet interleaver according to claim 12, further comprising

a bottom deflecting surface, said bottom deflecting surface fixed in position in close proximity to said pinch nip and having a portion that partially curves around said other roller, said deflecting surface plate configured to prevent said web material from wrapping around said other roller.

14. A sheet interleaver for a slicing machine that provides a slicing plane for slicing an elongated food product and a sheet from web material beneath said elongated product, comprising:

a supply of web material;

a drawing station having a first driver for drawing web material from said supply;

a feed station having a second driver for receiving web material from said drawing station and driving said web material through a cutting nip into said slicing plane;

a controller in signal-communication with at least one of said first and second drivers to drive web material at select differential speeds by said first and second drivers such that tension of the web material between said drawing station and said feed station is controlled; and

a tensioning station between said supply and said drawing station such that tension of said web material between said drawing station and said supply is controlled.

15. A sheet interleaver for a slicing machine that provides a slicing plane for slicing an elongated food product and a sheet from web material beneath said elongated product, comprising:

a supply of web material;

a drawing station having a first driver for drawing web material from said supply;

a feed station having a second driver for receiving web material from said drawing station and driving said web material through a cutting nip into said slicing plane;

a controller in signal-communication with at least one of said first and second drivers to drive web material at select differential speeds by said first and second drivers such that tension of the web material between said drawing station and said feed station is controlled;

wherein said tension is controlled by said controller to allow a slackened length of web material between said drawing station and said feed station that is greater than a straight line distance of the web material spanning between said drawing station and said feed station; and

a pressurized air dispenser that is configured to direct an air stream onto a side of said slackened length to maintain a tension on said slackened length of web material.

* * * * *