UNITED STATES PATENT AND TRADEMARK OFFICE

_____

BEFORE THE PATENT TRIAL AND APPEAL BOARD

_____

PROVISUR TECHNOLOGIES, INC.,
Petitioner,

v.

WEBER FOOD TECHNOLOGY GMBH,
Patent Owner

_____

Case IPR2024-00258
Patent No. 10,647,013

_____

DEPOSITION OF THOMAS R. KURFESS, Ph.D.

_____

Pursuant to Notice and the Federal Rules of Civil Procedure, the deposition of THOMAS R. KURFESS, Ph.D., taken by Petitioner, was held at 717 17th Street, Suite 1400, Denver, Colorado 80202, on Wednesday, December 11, 2024, at 9:06 a.m., before Jason T. Meadors, RPR, CRR, CRC, in the State of Colorado.

_____

DIGITAL EVIDENCE GROUP
1730 M Street, NW, Suite 812
Washington, D.C. 20036
(202) 232-0646

Provisur EX1038
IPR2024-00269
U.S. Patent No. 11,331,823

1 APPEARANCES

2 Henry Thomas, Esq.

3 Kennon Wales, Esq. (by Zoom videoconference)

4 Ren-How Harn, Esq. (by Zoom videoconference)

5 WILKIE FARR & GALLAGHER LLP

6 300 North Lasalle Drive

7 Chicago, Illinois 60654-3406

8 (312)728-9147

9 hthomas@wilkie.com

10 kwales@wilkie.com

11 rharn@wilkie.com

12 For the Petitioner

13

14 Paul Hart, Esq.

15 ERISE IP

16 717 17th Street, Suite 1400

17 Denver, Colorado 80202

18 (720)689-0679

19 paul.hart@eriseIP.com

20 For the Patent Owner

21

22 Also present: Angelina DiNorcia

1 TABLE OF CONTENTS

2 EXAMINATION Page

3 BY MR. THOMAS 4

4

5 EXHIBITS Page

6 Exhibit 1004 Kurfess drawing 155

7

8 EXHIBITS (Previously Marked) Page

9 Exhibit 1001 US Patent No. 11,331,823 5

10 Exhibit 1005 US Patent No. 10,647,013 5

11 Exhibit 1006 US Patent No. 4,253,597 64

12 Exhibit 1006 US Patent No. 11,331,823 76

13 Exhibit 2007 Declaration of Professor Thomas R. 5

14 Kurfess, Ph.D. in Support of Patent

15 Owner's Responses to Inter Partes

16 Review of U.S. Patent Nos. 10,647,013

17 and 11,331,823

18 Exhibit 2008 Sensor Technology Handbook 104

19

20

21

22

1 MR. THOMAS: For the record, my name's Henry
2 Thomas. I am an attorney with Wilkie Farr & Gallagher.
3 I am representing petitioner Provisur Technologies
4 Incorporated in this matter. Joining me remotely from
5 our Chicago office is Ren Harn and Kennon Wales, also
6 attorneys with Wilkie Farr & Gallagher.
7 Counsel, if you want to introduce yourself.
8 MR. HART: Paul Hart with Erise IP for patent
9 owner in the proceedings. With me today is Angie
10 DiNorcia, also with Erise IP.
11 THOMAS R. KURFESS, Ph.D.,
12 having been first duly sworn, testified as follows:
13 EXAMINATION
14 BY MR. THOMAS:
15 Q All right. Good morning. Would you state
16 your full name for the record?
17 A Sure. Full name is Thomas, middle initial R,
18 last name, Kurfess.
19 Q And you understand that you're here today to
20 provide testimony in connection with the proceeding of
21 the US Patent Office Patent Trial Appeal Board called
22 Inter Partes Review, correct?

1 A Yes, correct.
2 Q And there are two proceedings involved. One
3 is IPR 2024 00258. The other is IPR 2024 00269?
4 A Okay.
5 Q And you understand that your testimony
6 relates to a declaration you submitted in both of those
7 proceedings regarding two US patents, US Patent Number
8 10,647,013 and US Patent Number 11,331,823. Is that
9 right?
10 A Yes, correct.
11 Q Today, if I refer to the '013 Patent or '013
12 Patents, will you know what I mean?
13 A Yes.
14 Q And what about the '823 patents?
15 A That's fine.
16 Q You understand that these IPRs are between
17 Weber Food Technology GmbH and Provisur Technologies,
18 Inc.?
19 A Yes.
20 Q If I refer to Weber Food Technology as Weber
21 or Patent Owner, will you know what I mean?
22 A Yep.

1 Q And if I refer to Provisur Technologies,
2 Inc., as Provisur or Petitioner, will you understand
3 who I'm referring to?
4 A Sure.
5 Q Have you been asked to perform any work for
6 Weber in relation to the District Court proceedings
7 involving the -- either the '013 or '823 patents?
8 A No, I don't believe so.
9 Q Okay. But you did do some work for Weber in
10 District Court proceedings about two years ago. That's
11 right?
12 A Yes. A couple years ago. Yes.
13 Q You appeared live at trial in Kansas City,
14 Missouri?
15 A I did.
16 Q Have you read any materials such as briefs,
17 motions or orders from the current District Court
18 proceedings which would be Case Number 521-CV-06113?
19 A No, I don't believe so.
20 Q Okay. Are you aware of what, if any,
21 products are accused by Weber of infringing either the
22 '013 or '823 patents?

1 A No, not that I'm aware of.
2 Q Do you have any awareness of any Provisur
3 product that uses a paper interleaver?
4 A Not that I can recall. I've looked at some.
5 Not for this case, but in the past. But I don't
6 remember when they had paper interleavers or not.
7 Q Okay. You don't remember any specific
8 details about Provisur paper interleaver?
9 A No, I do not.
10 Q What about, you know, not talking about
11 what's drawn in the patents here but what about Weber
12 interleavers of actual physical machines? Have you
13 seen any of those?
14 A I mean, I've seen Weber machines. I can't
15 recall whether they had interleavers on them or not.
16 We weren't focusing on interleavers at that point in
17 time.
18 Q Okay. So sitting here today, no knowledge of
19 how either Weber or Provisur interleavers, if they
20 exist in the wild, how they actually work.
21 A Yes. I haven't seen the particular machines
22 and so forth, correct.

1 Q How many times have you had your deposition
2 taken before, Dr. Kurfess?
3 A I don't know. Maybe 30 times or so. So
4 between once or twice a year or so.
5 Q Always as an expert or ever as a fact
6 witness?
7 A I believe always as an expert, yes.
8 Q And what sort of legal areas have those cases
9 been?
10 A Typically, a lot of work in mechanical
11 systems, electrical mechanical systems. So all the
12 sensing, interconnection, you know, communications
13 between the sensors and actuators, et cetera,
14 et cetera. Like for mechanical systems, I would say in
15 general.
16 Q Okay. But in terms of areas of the law, have
17 been mostly patent cases, product liability?
18 A Mostly, I want to say almost exclusively,
19 patent cases, yes.
20 Q And a mix of, you know, A to Z IPR
21 proceedings as well as District Court proceedings?
22 A Yes. So IPR, District Court, then some ITC

1 and so forth, yes.
2 Q Do you tend to represent the patent owner
3 more than the either patent challenger or accused
4 infringer?
5 A Yeah, I couldn't really say. I've done both.
6 It's kind of half and half. Maybe it's 30/70,
7 something like that. I mean, I've done both.
8 Q Is there one you enjoy more?
9 A No, not really.
10 Q I'm sure it's all so fun and so hard to pick
11 favorites.
12 A I just like looking at the technology. It's
13 good stuff.
14 Q What about specifically as a witness for
15 Weber or its affiliates? How many times have you had a
16 deposition taken in a Weber matter?
17 A So I think in the Weber matter, it was just
18 the last one. I think it was once, maybe it was twice,
19 but once or twice. Yeah. I can't recall specifically.
20 But definitely had it at least once.
21 Q Would you describe the sort of work as
22 litigation consulting? Is that a fair way of

1 characterizing it? Or how would you --
2 A Yeah, when people ask me, just expert for
3 intellectual property and really the focus of the
4 technical side of things. Yes.
5 Q How much of your body of work today is
6 comprised of being an expert in litigation versus other
7 activities?
8 MR. HART: Object to form.
9 A One more time on that, please?
10 MR. THOMAS: Yes. Today, one of the things
11 you do professionally is you give expert testimony in
12 litigation; is that right?
13 A Yes.
14 Q Do you do other things professionally?
15 A Oh, yes.
16 Q And what are those?
17 A Well, so my primary job is being a professor
18 of mechanical engineering over at Georgia Tech. So
19 there I teach mechanical engineering courses, a lot of
20 design courses, manufacturing courses. I also do a
21 fair amount of research in manufacturing and the
22 machine area and so forth.

1 We support a number of -- of course, I get
2 paid for being a professor but then there are a lot of
3 unpaid things I do, including -- so I sit on the
4 Advisory Committee for Nuclear Security for the
5 Department of Energy. I sit on the Science and
6 Technology committee for the Navy. Et cetera,
7 et cetera. So, and those chew up a huge -- all of that
8 chews up a huge amount of time.
9 I would say that this work here is a pretty
10 small, you know, time constraints. Every so often, it
11 sort of spikes when you have to come in and do this or
12 work on a report and so forth.
13 Q Sure.
14 A But the bulk of it is other things in the
15 professional area.
16 Q If you were going to quantify that bulk as a
17 percentage, what would you say the percentage of your
18 work spent on litigation consulting is?
19 A Oh. Maybe 4 or 5 percent. It's a pretty
20 small number.
21 Q Okay. That's by hours worked?
22 A Yeah. I would say, you know, if I take a

1 look at days and so forth, you know, of the year, how
2 many days, yeah.
3 Q Yes.
4 A And even today, before I came here, I had
5 several hours with Navy an hour with the Department of
6 Energy and so forth. So it's been a busy day already.
7 Q Yes. I saw the National Laboratory work in
8 your report, which, you know, I won't ask about in case
9 there's nuclear secrets, but it sounds pretty cool.
10 How much or is anything that you're working
11 on research-wise today, is that in the food industry?
12 A Well, we actually do support a fair amount so
13 I also oversee all of manufacturing over at Georgia
14 Tech. So it's a fair amount of food processing and
15 agriculture and so forth that our operations encompass.
16 So I would say that -- I mean, I'm very well
17 aware of what we're doing there. Sometimes we provide
18 input in terms of a lot of similarities on design and
19 capability and processing and so forth. But I don't
20 have any, at present, current projects sponsored, let's
21 say, in the food processing area.
22 Q Okay. You're not the food guy at Georgia

1 Tech but folks who are doing that work might work under
2 your department umbrella. Is that what you're saying?
3 A Yes, they work under my institute, but you
4 could consider it a department if you want. And, yeah,
5 so they will -- they'll typically head up the project,
6 but they'll bring myself in or various teams in to help
7 them out in certain areas, you know, in terms of a lot
8 of the high-speed processing and things like that and
9 so forth.
10 Q When's the last time you worked directly on a
11 high-speed food processing project outside of
12 litigation?
13 A Oh, outside of litigation? I'm just trying
14 to think. We probably had several discussions of
15 those, like -- like I was supposed to give a seminar to
16 a team which was canceled just because it's so close to
17 Christmas. They said we're not going to get enough
18 people to join up. But probably within the past few
19 months, we were engaged with our food processing
20 people. We're actually putting together a large
21 proposal right now on AI and manufacturing. And so
22 we're bringing together our food people and so forth

1 and how do we weave that in and move that forward into
2 the overall proposal.
3 Q Okay. But your role then is more management,
4 supervisory, rather than actually doing the research
5 into food technology?
6 A It's technology integration. Yeah, I have
7 some of the management stuff but, yeah, they bring me
8 in there to say, Okay, how do we integrate it together
9 and use the technology, and so forth. Yeah.
10 Q Just to quickly touch on a few deposition
11 ground rules. You understand, as I have been saying,
12 that today I'll be asking you questions and unless your
13 counsel instructs you not to answer, you'll be giving
14 me truthful answers to those questions?
15 A That's fine, yes. Of course.
16 Q If you don't understand any of the questions
17 that I ask, you'll let me know that so I can clarify?
18 A Yes.
19 Q And I'll probably be trying to take a break
20 every hour or so, but if you need a break at a
21 different schedule, just let me know. And the only
22 thing I'd ask is that you finish asking whatever

1 questions is on the table at the moment. Does that
2 work?
3 A That's fine. Thank you.
4 Q Anything today that would keep you from
5 giving truthful or accurate testimony?
6 A No. Nothing.
7 Q What did you do to -- what did you do to
8 prepare for today's deposition?
9 A Went over my declaration. Went over several,
10 you know, whatever the reports, from the expert. Of
11 course, reviewed all of the material, the different
12 patents that are cited in the -- in the other expert's
13 report. Conversations with lawyers. Just reviewed my
14 notes and put together different notes and reviewed
15 those and refined those. That's about it.
16 Q And I see you have in front of you one copy
17 of your declaration. Your understanding is that that's
18 identical to -- withdrawn.
19 I see you have one copy of your declaration
20 and I believe it has an exhibit stamp. What matter is
21 that stamped from?
22 A When you say, "what matter," do you want the

1 IPR?
2 Q Yes, please.
3 A Yes. IPR 2024-00269.
4 Q Okay. And your understanding is that in IPR
5 2024-00258, you filed a completely identical expert
6 declaration; is that right?
7 A Yes, I believe so.
8 Q All right. So we'll work off this one. And
9 I don't think there will be any need to distinguish,
10 but if there is, just please let me know, if you need
11 to say, this is my '013 declaration; this is my '823.
12 But again, I think they're one and the same.
13 How long did you spend reviewing your
14 declaration?
15 A Well, probably -- I don't know. I should
16 have actually added it all up. I'd probably say in
17 terms of reviewing all the different materials,
18 probably 15, 20 hours or so. I don't know, just a few
19 hours here, a few hours there.
20 Q Over the course of about a week or so?
21 A Couple of weeks.
22 Q Couple of weeks?

1 A Yeah.
2 Q Do you recall specifically which exhibits you
3 reviewed for this deposition?
4 A Well, again, certainly, my report. We looked
5 at the other experts -- I looked at the other experts'
6 report. Definitely several of the different patents
7 that are referenced. And I think -- I also did take a
8 look at the transcript from the deposition, I think,
9 from the expert.
10 Q When you said you reviewed some of the
11 patents, do you recall which ones those were that you
12 reviewed?
13 A Oh. Let's see. So there was the -- the
14 Muller patent. The Waffner patent. GEA patent.
15 The -- I'll have to go back now and -- let's see. I
16 can pop in here and tell you. But the ones we talked
17 about in here, I did review.
18 Q Okay. So the ones that are specifically
19 listed in the section headings?
20 A Yes. Yeah. I mean, yeah. That makes it
21 easy, right? And I know I'm supposed to go and take a
22 look at my report and so forth. Yeah, so there's

1 Muller, GEA, I always called it, G-E-A, but I guess
2 everybody calls it GEA. DePoi. We've got Jordan in
3 there. And -- I think -- I think that was it, if I'm
4 not missing any.
5 Q Did you review any document or other
6 materials that were not disclosed in your declaration?
7 A No, I don't believe so.
8 Q Oh, have you reviewed any of the briefing
9 submitted as papers in either of these two IPRs?
10 A So just the initial briefings? Or -- I'm
11 not. . .
12 Q Yes. So -- right. There was the initial
13 petition.
14 A Yes.
15 Q There was a patent owner preliminary
16 response. There was a patent owner response. And
17 there was an institution decision by the board. Of
18 those four documents, I guess eight documents, because
19 there's two cases, do you recall reviewing those?
20 A Yeah. I don't recall one or the other. I
21 really focused on expert reports and what the expert --
22 that was my, as you know, my task, was to review that

1 report and comment on it, opine on it.
2 Q During the course of your review, did you
3 speak with any attorneys?
4 A Yes.
5 Q Who?
6 A Well, with the two attorneys here and then,
7 Nina, what's the --
8 MR. HART: Canina [phonetic].
9 A Canina, yeah.
10 Q (By Mr. Thomas) And about how long did you
11 spend meeting with them?
12 A Well, I spent the bulk of the day yesterday
13 and then we probably had several -- several web
14 meetings, you know, right around an hour apiece or so.
15 Q I recall earlier you said you don't believe
16 you've considered any of the materials from the
17 co-pending District Court proceeding. That's right?
18 A Yeah, I don't -- I don't think so. Pretty
19 much, it was whatever was in the expert's report and
20 the material that he relied on. As well as his
21 deposition.
22 Q Do you see on the face of both of these

1 patents that a Mr. Tobias Einloft-Velte and a
2 Mr. Thomas Nispel are listed as inventors?
3 A Yes.
4 Q Were you aware that those two inventors had
5 their deposition taken in the District Court?
6 A I don't think so.
7 Q So you don't recall reviewing any of their
8 deposition testimony about their inventions?
9 A No. No, I don't think so.
10 Q Do you think that deposition testimony from
11 an inventor would be useful information in determining
12 how a person of skill would interpret these patents or
13 the prior art?
14 MR. HART: Object to form.
15 A Yeah, I don't know. I haven't really thought
16 about it, so -- yeah.
17 Q (By Mr. Thomas) You didn't ask to speak with
18 the inventors or read their depositions?
19 A No. You know, I was, again, just asked to
20 take a look at the report of experts and comment on
21 that or opine on that report.
22 Q Do you have any understanding of who Weber

1 hires as engineers or machine designers?
2 A No. I don't -- I don't believe I have much
3 of an understanding there.
4 Q So you wouldn't be able to tell one way or
5 the other if Mr. Einloft-Velte or Mr. Nispel was a
6 person of ordinary skill?
7 A Once again, given the information that I
8 have, no, but I think that's a pretty clear definition,
9 and so I would say if they met that definition that's
10 been agreed upon, then they would be a person of
11 ordinary skill in the art.
12 Q Were you aware that another expert was hired
13 by Weber to provide opinions regarding the validity of
14 the '013 and '823 patents?
15 A So I know that there are other experts. I
16 don't know what their particular jobs are.
17 Q Have you ever met Dr. Claire Sands?
18 A No, I don't think so.
19 Q Have you ever read an expert report that
20 she's authored?
21 A Not -- not that I can recall. At least for
22 this. Yeah, I don't recall.

1 Q Do you have any awareness of the positions on
2 invalidity that Weber is taking from through experts in
3 the District Court proceedings?
4 A No, huh-uh.
5 Q Would it surprise you if your opinions were
6 inconsistent with theirs?
7 A You know, my opinions are based on -- I keep
8 tapping over here, but my opinions in here are based on
9 the reports. So I'm just commenting on the reports.
10 So I don't know what their opinions are or what they're
11 working on and so forth. So I couldn't tell if I'd be
12 surprised one way or the other.
13 Q But you have confidence in your opinions?
14 A Yes, I do.
15 Q You believe they're correct to a reasonable
16 degree of engineering certainty?
17 A Yes. I do.
18 Q Before your involvement in the litigation
19 between Provisur and Weber, either this IPR litigation
20 or the previous one, had you ever heard of the company
21 Weber?
22 A So before, by -- this one or the previous one

1 I was in. I don't know. It doesn't particularly sort
2 of stick out. But we do see a lot of different
3 equipments and machines across the board, so -- but
4 nothing particular sticks out.
5 Q What about Provisur?
6 A Again, I don't believe so. But. . . may have
7 come across it in the past 35, 40 years.
8 Q Formax?
9 A Again, same answer. Don't recall, but
10 nothing in particular sticks out.
11 Q GEA? G-e-a?
12 A G-e-a. Oh, not "Geea," "Geiya." Is that
13 right?
14 Q That's I think that's how the Germans say it,
15 and I defer to that.
16 A No, I have not.
17 Q What about CFS?
18 A No, I don't think so.
19 Q Had you ever seen a high-speed industrial
20 meat or cheese slicer?
21 A So before the previous one in 2022. I've
22 been to plenty of processing plants, but I don't think

1 one where we were actually taking a look at specific
2 meat and cheese slicers at high speed.
3 Q What about any high-speed interleaving
4 machines?
5 A So you mean where we're putting the paper
6 down in between product.
7 Q Yeah, I guess we should start there. What is
8 your understanding of the term "interleaving" as a
9 verb?
10 A So my understanding is we've got product, in
11 this particular case it's, you know, meat or cheese or
12 food slicers. And you want to put that piece of paper
13 or sheet of something in between the pods. So in terms
14 of interleaving with food products, no. We have had a
15 lot of paper handling type of machines with a lot of
16 research projects with International Paper or Georgia
17 Pacific.
18 Certainly, when you pack, let's say,
19 bearings, at least in the old days, we used to pack
20 them with oil paper covering them. And so you would
21 interleave the oil paper in between the bearings and so
22 forth. And that would happen at pretty high rates.

1 Q By hand or by machine?
2 A Oh, by machine.
3 Q So what sort of paper machines have you
4 examined?
5 A Well, everything from things like copy
6 machines and printers all the way to big roll-to-roll
7 printers and paper processors, the types of machines
8 that actually make the papers and so forth.
9 Q Okay. And in what years have you had those
10 paper handling experiences?
11 A Well, it's probably up to ending -- it was
12 probably -- I want to say probably pre-COVID. So last
13 round in that area was probably in the late teens,
14 2017, '18, '19. And some of the students and I went
15 off to Department of Energy in Oak Ridge. I still had
16 some students wrapping up the project while I was
17 there. So 2019, 2020.
18 Q What about earlier experiences, sort of
19 getting prior to at the time of the patent, did you see
20 in the paper handling?
21 A Yeah. So in terms of paper handling as I
22 mentioned with bearing, packaging and so forth,

1 material handling, that would have been -- I'm just
2 trying to think -- probably all the way back into the
3 mid-to-late '80s.
4 Q Okay. How did the bearing packaging machine
5 insert those oil paper interleaves between the
6 bearings?
7 MR. HART: Object to form.
8 A So -- so a bearing typically have a -- these
9 would be roller bearings that I'll talk about. They
10 have an inter raceway, which looks like a cone, and
11 you've got a bunch of rollers that are on top of a cone
12 that are held on by a cage. And typically, you would
13 put a -- so you've got -- I apologize.
14 You know, without the video, right, but
15 you've got a bearing. You sort of stack them together.
16 And then the cup goes on top of it and that's the part
17 that sort of comes apart. You would typically put --
18 you would put an oil paper below the bearing, then
19 between the cup and the rollers.
20 And then you put the cup down and then you
21 put the paper on top of the -- on top of the cup and
22 then it would go into the box for shipping.

1 Q (By Mr. Thomas) And in terms of the machine
2 that was actually putting the paper in, how would that
3 work?
4 A Oh, gosh. Well, it was basically, it was
5 a -- it was a paper dispensing machine. We had a big
6 roll. It was a pretty heavy oil paper. And yeah, you
7 would feed the paper through, typically you would
8 have -- you would have a -- you'd want to control the
9 unrolling, because those rolls are enormous.
10 They had a lot of inertia, so you would
11 control the speed of the roll and the paper was pretty
12 robust. So you could do a little bit of pulling on it
13 with tension. And then you would have some type of
14 buffer to make sure that you didn't pull on the roll
15 too hard to tear the paper.
16 And then you would go into a separate system
17 that would isolate the big roll area into the separate
18 piece of paper where you would actually -- I can't
19 remember exactly how we would -- where we would cut it
20 off and so forth, but you'd have a little bit of a
21 buffer there. And then drop it directly on top of the
22 packaging area.

1 Q Okay. So it sounds like you were describing
2 a machine that had two buffers? Or just one buffer?
3 A You know, it's been some time, but I am
4 pretty sure that we had a -- we certainly had the big
5 buffer at the roll and then we would have a -- you
6 know, we would certainly have a big buffer with the
7 roll. And we would probably have something -- I don't
8 know. But there was a big buffer with the roll. We
9 had our dancer, and so forth with our serpentine belts,
10 et cetera, et cetera.
11 Q Okay.
12 A Not unlike the machines we're looking at
13 today, right?
14 Q Do you recall -- an order of magnitude, I
15 think, is fine, but do you recall sort of what tension
16 setting that dancer was at in terms of adding tension
17 to the buffer?
18 A No, absolutely not. Yeah. That's a long
19 time ago, and so forth. And, you know, I said you make
20 sure it didn't rip and these are pretty robust pieces
21 of paper. If you think about the paper that we were
22 looking at, was kind of on the order of how a brown

1 paper bag would be, like a grocery bag, so a little bit
2 thicker.
3 Q A little bit thicker and more robust than the
4 types of interleaf you find in meat and cheese?
5 A I think so, yes. I haven't run any types of
6 tests or anything like that, but they tend to be more
7 flimsy.
8 Q And in that machine, was there a high
9 accelerations and high decelerations as paper was being
10 fed to be cut?
11 A Again, I'm not -- you know, I don't know what
12 high accelerations and decelerations were, but we were
13 packing a fairly -- you know, a fairly large quantity
14 of bearings, an hour per minute and so forth. So
15 things were moving along pretty quickly.
16 Q Do you think the interleaves per minute, that
17 rate would be higher than in the food processing prior
18 art in this case? Lower? About the same?
19 A Oh, I couldn't really tell you.
20 Q Is there any vacuums used in that machine?
21 A I don't recall.
22 Q You don't recall if it was one buffer loop or

1 two?
2 A No, I don't recall the inner workings and so
3 forth.
4 Q Okay. Do you think either could have been
5 used?
6 MR. HART: Object to form.
7 A Again, I don't know. I don't have a good
8 feel for that. It's been some time since those
9 machines. Yeah.
10 Q (By Mr. Thomas) I think you already said.
11 What year was this?
12 A It would have been mid-to-late '80s, maybe in
13 the early '90s.
14 Q Okay. Do you recall any of the sensors that
15 were used in that machine?
16 A Yeah. Some. There were proximity sensors.
17 So is something close or not, is it -- we had light
18 sensors, so does it break the beam of light? Yes. Is
19 there a material there or not? Which would tell you if
20 the roll had gone off track. Certainly, we had a
21 tachometer, which tells us the speed of the roll and so
22 forth.

1 But that's about it. I'm sure there was a
2 whole bunch more. It was a very complicated machine.
3 A lot of things going on with it, but, yeah, I don't
4 recall the details there.
5 Q Was it controlled by integrated circuits
6 because of central machine control?
7 A So I would guess that there was an integrated
8 circuit, you know, on there, but I would say that it
9 was probably controlled by a PLC, a programmable logic
10 controller.
11 Q Okay. That 1980s period seems like a turning
12 point between machines being controlled by chips and
13 machines not being controlled by chips. Is that a fair
14 takeaway I've gotten from this all?
15 A Well, no. We had, back in the '70s, we had
16 computer controlled machines and things like that. It
17 sort of depends on how much you wanted to do with --
18 with the computer and so forth.
19 Certainly, today, the machines do a lot more
20 with the computer than we did, let's say, back in the
21 '70s and '80s.
22 Q Oh, do you recall if in that ball bearing or

1 bearing interleaving machine, were there any brakes
2 used on the paper?
3 A That, I -- I don't recall.
4 Q I think you describe in your report earlier
5 today as well that your background is in high-precision
6 manufacturing and meteorology systems; is that correct?
7 A Metrology.
8 Q Metrology.
9 A Yes. Metrology is the science of
10 measurement. Meteorology is the weather.
11 Q I think I split the difference there.
12 A You did. Yes, you did. So people -- they
13 hear, you're so -- so you're a weatherman. No, I'm an
14 engineer and so forth. Yes.
15 Q Could you just describe in your own words
16 what that means, precision manufacturing and metrology?
17 A Metrology.
18 Q Metrology.
19 A We'll get there. It's okay. I know what
20 you're talking about.
21 Yes. So if you take a look at any
22 high-precision system, and these exist across the

1 board, certainly, automotive, aerospace. But a lot of
2 the sensors and so forth and capabilities, even in the
3 food processing area, how do you control an
4 electro-mechanical system to give you a part, whether
5 that part is a high-precision bearing or it's a finely
6 tuned and controlled slice of meat or cheese to give
7 you an exact weight, how do you implement that?
8 How do you design a machine to do that? What
9 sensors are needed? So what types of measurements do
10 you have to take and how do you take those measurements
11 and then control your system to give you your desired
12 outcome?
13 Q Okay. How would you describe your experience
14 level in the field of web handling?
15 A So in terms of web handling, we've done a lot
16 of work on the machines and web handling, the focus has
17 been more on the diagnostics. You know, how is the web
18 handling doing? What types of sensors do we have? Or
19 even taking information off of the sensors that are
20 there, and understanding the process better.
21 So in general, my team comes in to take a
22 look at those types of machines and figure out how to

1 improve their capabilities, reduce their down time, or
2 improve their up time. And make sure that, in fact,
3 really, the overall goal is improve consistency.
4 That's really what manufacturing is all
5 about. You just want the machine to do the same thing
6 every time. Hopefully, that same thing is make a good
7 part.
8 Q What are some of the variables that are
9 important in improving consistency in web handling?
10 A Oh, gosh, you know. There are a number of
11 them. It depends on the type of web you're using and
12 so forth. But certainly, things like the tension on
13 the -- on the material going through the machine. If
14 you're actually doing paper processing, you've got --
15 you're taking a look at -- if I think in processing, I
16 mean in terms of making the paper, you're looking at
17 things like water content and so forth of the paper.
18 Humidity. Temperature.
19 You're going to have to be careful about any
20 vibration that goes on in your web. You can get
21 standing waves, so you can get bouncing in your
22 material and everything like that. Certainly, the

1 velocity of the material going through. I think
2 acceleration. I think we all remember back in high
3 school, Newton, F = ma.
4 So a lot of times, the tension does relate
5 to, in a big way, to accelerations. Not just velocity,
6 but acceleration. And there may be positional issues
7 as well. What is the position of the web, whether
8 it's, you know, along the path of the web or
9 dynamically as it aligns to the roller and so forth.
10 Q In what ways does the tension relate to
11 acceleration?
12 A Well, if you pull on something harder, it
13 will accelerate more. F = ma. Force equals mass times
14 acceleration, for the record. But, yes. So again, you
15 know, you're pulling something along. If you pull
16 harder, I mean, we've all, I think, unrolled paper in
17 various operations, right? If you pull slowly, it
18 doesn't move very fast. If you pull faster -- I mean
19 if you pull harder, it moves faster. And if you really
20 give it a yank, you can actually just tear the paper.
21 Q But the tension would increase too much if
22 you gave it a yank?

1 A Yes, and you'd cause the tension to be too
2 high in the paper and you'd cause it to tear.
3 Q And one way to avoid that would be to hold
4 the paper in a low-tension buffer so even when you gave
5 it a yank, the tension wouldn't increase to a tearing
6 point. Is that fair?
7 MR. HART: Object to form.
8 A I'm not sure what a low-tension buffer is.
9 If you -- I guess -- could you clarify that in terms of
10 what you're thinking there? I know there are all sorts
11 of different buffers and things like that. So. . .
12 Q (By Mr. Thomas) Sure. So it would be
13 possible to have your web material in a buffer before
14 whatever roller or motor is accelerating it quickly; is
15 that right?
16 A Yes. So if you had a buffer, you know,
17 where, let's say, the -- the paper is loose and there
18 was no tension on it. And then if you would pull on
19 it, certainly, if you accelerated rapidly, there's
20 still some force through the acceleration but you're
21 not trying to pull, you know, off of the roll.
22 Again, I think about paper towels. I can

1 have five paper towels and we've got the perforation in
2 a roll and if they're not attached to the roll and I
3 pull it really fast, probably not going to tear along
4 the perforations unless you pull very, very hard and
5 accelerate a lot. If it's attached to the roll, and I
6 think we do this all the time. You give it a quick
7 yank and it'll tear right at the perforation. So. . .
8 Q So you'd want a low-tension area isolating
9 the high-inertia roll from the high acceleration
10 downstream process.
11 A I think you do not want to have that high
12 acceleration -- that variation, all right, in terms of
13 acceleration. You don't want that pulling on the roll,
14 on that high inertial roll. These rolls can be pretty
15 big, you know.
16 And so, yeah, if you'd really accelerate that
17 material and try to move that roll quickly, if --
18 again, you might drive the roll with a motor. Okay,
19 that's fine and so forth. But, yes, it's nice to have
20 a buffer in there to make life a little bit easier.
21 Q So the buffer would lower the tension and the
22 driving accelerations would raise the tension but not

1 enough to break it.
2 A So -- it's not quite -- so the buffer -- it
3 decouples the high-inertia part of the roller. Again,
4 F = ma. Force equals mass times acceleration. If I've
5 got a high acceleration and I've got a large mass over
6 here, I'm going to get a large force. If I've got a
7 buffer in between, and so I'm only accelerating a small
8 piece of paper, then my force is smaller, a lot
9 smaller, so I'm not going to tear.
10 So what you're doing is you're making sure
11 that you don't have the high-speed acceleration that
12 drops off a piece of paper the size of, let's say, a
13 slice of cheese in this case.
14 So you're going to accelerate it a little bit
15 but you're not yanking on the big or pulling on the big
16 roller at the time. So that's what the buffer is
17 doing.
18 Q And if that buffer were controlled with, for
19 example, a dancer roller, would you want a high-inertia
20 dancer roller or low-inertia roller for that purpose?
21 MR. HART: Object to form.
22 A Yeah, I don't know. I'd have to take a look

1 at -- you know, what your definition of high inertia,
2 low inertia and the whole bit. It's getting a little
3 bit -- I'm happy to talk about some of the simple
4 design stuff. We start to get into high inertia
5 dancers, low inertia dancers, I haven't thought too
6 much about that.
7 Q (By Mr. Thomas) Without doing the math and
8 knowing the numbers, you can't really give an opinion?
9 A Exactly, yeah. Because again, if you think
10 about it, what is a high-inertia roller, what are the
11 tension levels that you need, and so forth. And so
12 there's a lot of -- a lot of information that has to
13 get in there.
14 Q All right. You have in front of you
15 the '013 Patent, right?
16 A I sure do, yes.
17 Q And you've reviewed and analyzed this patent
18 before?
19 A Yes.
20 Q How would you describe the invention claimed
21 in this patent?
22 MR. HART: Object to form.

1 A Yeah, I mean, I -- I guess I would say, look,
2 the patent speaks for itself. You know, I wasn't
3 really just asked to analyze the patent and so forth.
4 So I'll just say the patent is what it is. You know,
5 my job was to take a look at the expert's report and
6 comment on the combinations that the expert put
7 forward.
8 Q (By Mr. Thomas) It's an interesting point.
9 Your report doesn't take the position that the proposed
10 combination is missing any of the claimed elements from
11 the patent, right?
12 MR. HART: Object to form.
13 A My -- my report is really taking a look at
14 what the -- what the expert wrote and then just
15 commenting on -- on the concepts put forth by the
16 expert.
17 Q (By Mr. Thomas) And so I think, for example,
18 one of the things that comes through very clearly to me
19 in your report, is that you disagree that the
20 motivations that Mr. Jobin identified, you disagree
21 that a person of skill would be motivated in that way,
22 right?

1 A Yes, through the combinations that he put
2 forward, yes.
3 Q But I don't see any opinion in here that,
4 assuming for argument's sake that that combination was
5 made, I don't see you take the position that that
6 combination would not meet the claimed elements of
7 the '013 Patent. Is that a correct understanding of
8 your opinions?
9 MR. HART: Object to form.
10 A Again, I wasn't asked to -- I don't have an
11 opinion on that. I wasn't asked to opine.
12 Q (By Mr. Thomas) Okay.
13 A On that, yeah.
14 Q No -- I guess as a lawyer, I would call it a
15 missing element. No opinions that there are missing
16 patents and elements from the proposed combination.
17 MR. HART: Object to form.
18 A Yeah, once again, I was only asked to take a
19 look at Mr. Jobin -- Jobin; is that right? His report
20 and his combinations, so that's what I focused on.
21 Q (By Mr. Thomas) And the same is true for the
22 '823 patent. You don't have an opinion that the

1 proposed combination is missing elements claimed by the
2 '823 patent.
3 MR. HART: Object to form.
4 A Again, yeah, I was only asked to comment on
5 Mr. Jobin's report. So I did not take a look at those
6 at all.
7 Q (By Mr. Thomas) You did not take a look at
8 what at all?
9 A The question you asked. If you could read
10 back the question.
11 THE REPORTER: "And the same is true for the
12 '823 patent. You don't have an opinion that the
13 proposed combination is missing elements claimed by the
14 '823 patent."
15 A Right. I wasn't asked to do that, so I
16 didn't do that.
17 Q (By Mr. Thomas) Okay. So to what extent did
18 you review the '013 Patent?
19 MR. HART: Object to form.
20 A Again, I read it over, but my main focus was
21 on the report and the combinations that were put
22 forward in the report.

1 Q (By Mr. Thomas) Have you looked at the
2 claims of the '013 Patent?
3 A Some time ago.
4 Q In doing so, did you come to a conclusion on
5 how a person of skill in the arts would understand the
6 meaning and scope of those claims?
7 MR. HART: Object to form.
8 A Again, I wasn't asked to think about that, so
9 I really did not focus on -- I keep putting it over
10 here. This is my declaration. But on the report, yes.
11 Q (By Mr. Thomas) Did you read the file
12 history that preceded the issuance of the '013 Patent
13 and '823 Patent?
14 A You know, I can't recall. I may have. My
15 main focus, again, I know I keep repeating myself, but
16 just so to be clear. It was really on Mr. -- what's
17 his name again?
18 Q Jobin.
19 A Jobin. I keep wanting -- I had a colleague
20 named Tobin. I keep wanting to call him Tobin. But
21 Mr. Jobin's report is what the focus was on and the
22 various patents that he put in his report.

1 Q Can you turn to the end of the '013 Patent
2 and find claim 2?
3 A Yes.
4 Q What's a material store as it's used here?
5 MR. HART: Object to form.
6 A Again, I -- I don't have an opinion on that.
7 I was not asked to look at it. And I'm just not ready
8 to give you an opinion on that, just off the cuff here.
9 Q (By Mr. Thomas) Okay. What about a removal
10 device for a removal of a material web from the
11 material store?
12 MR. HART: Object to form.
13 A Again, same thing. I was really asked to
14 comment on Mr. Jobin's report, and not on the patents
15 or the claims themselves.
16 Q (By Mr. Thomas) Okay. What about a loop
17 store defining a space for the material web --
18 withdrawn.
19 What about a loop store defining a space for
20 the removed material web to form a loop, the loop store
21 located between the material store and the cutting
22 region? What's your understanding of the scope of that

1 term as used in this patent?
2 A Once again, I wasn't asked to take a look at
3 scopes and understanding and hone in on the particular
4 patents. So I don't have an opinion at this point in
5 time on that.
6 Q Okay. What about a contact surface having at
7 least a portion thereof that is air permeable, the
8 contact surface at least partially bounding the loop
9 store and at least partially covered by the loop that
10 contacts the contact surface?
11 A And once again, and I'll just, really, if
12 it's not in my declaration, then I'm really not -- I
13 wasn't asked to take a look at it. So I'm not
14 comfortable at this point in time saying, here's an
15 opinion on these types of things. My understanding is
16 we're going to focus on the declaration.
17 Q What about a device for determining a size of
18 the loop formed in the loop store, the device detecting
19 changes in at least one of a pressure differential in a
20 flow condition, the pressure differential being a
21 difference in pressure between a first side of the
22 contact surface and a second side of the contact

1 surface, the flow condition being a change of the flow
2 of air through the air permeable portion of the contact
3 surface, wherein the changes in the pressure
4 deferential and/or the flow conditions represent a
5 varying influence of the material loop on the air
6 permeable portion on the contact surface that is
7 provided as a measure for the loop size?
8 MR. HART: Object to form.
9 A Quite the sentence. But once again, I really
10 haven't formed an opinion there. I wasn't asked to do
11 so, so I did not do that.
12 Q (By Mr. Thomas) It is quite the sentence.
13 Any idea of what is meant by that?
14 MR. HART: Object to form.
15 A Again, I think I'm going to pass on that
16 question, because I really haven't thought about it,
17 and I just -- you know, I know this is very important
18 and in order to give you an opinion there, that's
19 something that I would have to think about.
20 Q (By Mr. Thomas) Okay. On pages 12 and 13 of
21 your report, you give a, what you describe as a Brief
22 Overview of the '013 and '823 Patents?

1 A Yes.
2 Q And in your position, sitting here, is that
3 you did not perform any claim construction of any claim
4 term from either of those two patents in order to
5 opine -- to opine on the '013 and '823 patents?
6 MR. HART: Object to form.
7 A Again, I just focused on responding to
8 Mr. Jobin's report. So I didn't put anything like that
9 together.
10 Q (By Mr. Thomas) Do you have any
11 understanding of the legal standard for interpreting
12 claim terms?
13 A No, I'm not a -- I'm not a legal expert. I
14 leave that to the lawyers.
15 Q I guess for -- and one moment.
16 And in your report on pages 8 through 12, you
17 provide an overview of Relevant Legal Principles?
18 A Yes.
19 Q And I don't see there any legal principles
20 about claim instruction.
21 THE REPORTER: Instruction or construction?
22 MR. THOMAS: I may have said instruction.

1 Withdrawn.
2 Q (By Mr. Thomas) There's no paragraph in this
3 section for relevant legal principles about claim
4 construction. That's correct?
5 A Yes. Unless I'm missing it and so forth.
6 Yeah. I don't think it's there, yeah.
7 Q The attorneys didn't instruct you on how to
8 construct a claim?
9 A No, I don't believe so.
10 Q I do see, though, in paragraph 21, you write
11 that you understand that a patent claim is invalid if
12 it is anticipated or obvious in view of prior art, and
13 that a claim can be unpatentable even if all of the
14 requirements of the claim cannot being found in a
15 single prior art reference. Do you see that sentence?
16 A Yes.
17 Q How can you determine the requirements of the
18 claim without knowing what those claim terms mean?
19 MR. HART: Object to form.
20 A You know, again, I'm not a legal expert. My
21 job was to take a look at Mr. Jobin's report and
22 address what he -- you know, give an opinion of what he

1 wrote in his report, in particular with the
2 combinations that he put forward.
3 Q (By Mr. Thomas) Do you think that your
4 declaration and your opinions relate to obviousness?
5 A I -- you know, I don't -- again, we'd have to
6 go back and take a look. There's obviousness there, so
7 if you want me -- to point me to a spot where we talk
8 about it, I'm happy to talk about it in my report.
9 Q Paragraph 21 talks about obviousness. Why is
10 that?
11 A I think that that's just laying some of the
12 background information. If you want to specifically
13 talk about where I opine on obviousness, that would be
14 great. I'd be happy to talk about it.
15 Q Your understanding, though, is that this
16 report is not giving an opinion on obviousness.
17 MR. HART: Object to form.
18 A My report is to take a look at Mr. Jobin's
19 combinations. And that's what I did and talk about
20 what he did. So my report was focused on his report.
21 Q (By Mr. Thomas) Did you understand from
22 Mr. Jobin's report that he was giving an opinion that

1 the challenged patents claims were obvious?
2 A I'd have to go back and take a look. Again,
3 my job was to say, Look, you know, do these come
4 together? Do they make sense? You know. And would
5 they -- would they work and, you know, would a person
6 of ordinary skill in the art, you know, have thought
7 about combining these? And that's what I commented on
8 in my report.
9 Q You don't have an opinion that any claim of
10 the '013 Patent is patentable; is that right?
11 MR. HART: Object to form.
12 A Again, I did not go through the '013 Patent
13 and do any analysis along these lines.
14 Q (By Mr. Thomas) So that's a "no." You have
15 no opinion as to whether any claim of the '013 Patent
16 is patentable.
17 MR. HART: Object to form.
18 A Again, I -- I couldn't say one way or the
19 other. I don't have an opinion because I wasn't asked
20 to form an opinion.
21 Q (By Mr. Thomas) You have no opinion one way
22 or the other as to whether Provisur has met its burden

1 of showing unpatentability for any claim of
2 the '013 Patent; is that right?
3 MR. HART: Object to form.
4 A Once again, I was not asked to look at that.
5 I was simply asked to look at Mr. Jobin's report and
6 comment on, form opinions in his report.
7 Q (By Mr. Thomas) Okay. And you have no
8 opinion one way or the other as to whether any
9 challenge claim of the '823 patent is patentable.
10 MR. HART: Object to form.
11 A Once again, I was not asked to look at that,
12 so I did not form an opinion.
13 Q (By Mr. Thomas) And no opinion one way or
14 the other whether Provisur has met its burden of
15 showing that any challenged claim of the '823 patent is
16 unpatentable?
17 MR. HART: Object to form.
18 A And once again, I was not asked to look at
19 that, and so I did not form any opinions on that.
20 Q (By Mr. Thomas) Can we go back to paragraph
21 27 of your report?
22 A Yes.

1 Q You see you use the term "cutting region" in
2 paragraph 27. Do you see that?
3 A Yes.
4 Q What's a cutting region?
5 A So a cutting region is where cutting is being
6 done.
7 Q That's your opinion as a person of skill in
8 the art as to how you use that term?
9 A Yes. You're cutting -- excuse me?
10 MR. HART: Object to form.
11 A Yeah. You're cutting the -- the paper, the
12 interleave, or you're cutting the food product in the
13 cutting region.
14 Q (By Mr. Thomas) Does the cutting region have
15 to cut both paper and food product?
16 MR. HART: Object to form.
17 A So I was not, at least in this general term,
18 in the view of the '013 and '823 patents, I was not
19 asked to determine if that was the case or not. I
20 think we do have a -- I think we do have -- I think
21 it's Jordan, correct? I'd have to go back and take a
22 look.

1 But there is an instance where, you know,
2 that is an issue, and certainly, we can talk about that
3 specific issue as I respond to Mr. Jobin's report.
4 Q (By Mr. Thomas) By you used these words,
5 "cutting region," in your report, right?
6 A Yes, to provide background.
7 Q Okay. What about material store? What's a
8 material store, as you use it?
9 MR. HART: Object to form.
10 A Again, that's just a general term. It
11 doesn't have any specific meaning here. If we want to
12 discuss that with respect to Mr. Jobin's report and his
13 combination of different technologies, I'm happy to do
14 that.
15 Q (By Mr. Thomas) Do you disagree that a roll
16 of paper is an example of a material store?
17 A Once again, I'd have to take a look at what
18 the context is. What the context is and so forth, you
19 know. I know that there's a lot of -- what I would
20 call it, pickiness, in terms of all sorts of different
21 definitions and so forth.
22 So I would have to be given a very specific,

1 you know, content in terms of what we're talking about
2 for material store.
3 Q The context, I think, is paragraph 27. You
4 write a material store, i.e., a roll of paper. You'd
5 agree that a roll of paper is an example of a material
6 store?
7 A Okay. If that's the example, sure.
8 Q And what about a loop store, which you use in
9 paragraph 27? What did you mean by a loop store?
10 A Again, I'd rather not get into generalities.
11 This is a brief overview of the '013 and '823 patents
12 to really set the stage. Really, my focus, if you want
13 to talk about a loop store with any of the patents or
14 technologies that Mr. Jobin brought up, I'm happy to do
15 that.
16 Q Well, I want to talk about a loop store as it
17 relates to your other overview of the '013 and '823
18 patents. So what did you mean by loop store?
19 A If you want, we can go through the '013 -- I
20 am I'm sorry, the '013 and '823 patents and find loop
21 store in here. If it's in here then, you know, it is
22 what it is and so forth.

1 So this is sort of a brief overview to get us
2 to the, you know, to get us to the discussion of, you
3 know, of the report.
4 Q I think I understand that. But when you use
5 the term "loop store" in your brief overview, what did
6 you mean by it?
7 MR. HART: Object to form.
8 A Well, I mean, I think if you want, we can go
9 into and take a look at -- you know, we can take a look
10 within the context of the patents and so forth. If you
11 wanted to zero in on a particular text in the patents.
12 But really, this was setting the stage to discuss the
13 other technologies that were brought up. This was what
14 my focus was on.
15 Q (By Mr. Thomas) So sitting here -- and
16 you're welcome to review the '013 or '823 patents. But
17 sitting here, are you going to give me any meaning for
18 what you meant by a loop store as you used that in
19 paragraph 27?
20 MR. HART: Object to form.
21 A Again, I used that as a general term. If we
22 want to zero in on some specific technologies that were

1 discussed in the -- in the report, that is really where
2 I'd be very happy to engage there, but again, this is
3 general term.
4 I didn't want to provide anything, to say,
5 well, this is conflicting with this other one and so
6 forth, because loop store could be multiple things in
7 some of the different technologies. And so. . .
8 Q (By Mr. Thomas) Right, and I'm asking you
9 for your understanding of how you used that term in
10 paragraph 27. Are you prepared to answer that
11 question?
12 A It's just a general term. Let me go through
13 the patents here and take a look at what it may be.
14 Again, I wasn't asked to opine on the patents. It was
15 a brief overview. But I'm happy to go through the
16 patent and see if we can get to -- you know, see if we
17 can get you an answer to that.
18 (Examines a document.) Yeah. So if -- if --
19 let's see. We'll go back to the report here.
20 So I think if -- components of material
21 store, a roll of paper or a cutting region. So where
22 something is cut, and again, I know there were

1 discussions on cutting region, so I want to be careful.
2 There are going to be very specific questions on the
3 loop store between the store and the cutting region.
4 So this is where you might have a loop of material
5 that's in between the cutting region and the material
6 region, let's say the roll of paper.
7 And again, I'm very careful about this. I
8 want to make it very clear because there are all sorts
9 of different definitions floating around and so forth.
10 And I want to make sure that coming down the road, you
11 don't say, Well, gosh, I think you already said that.
12 Or you said something different.
13 Because there are different loops that are
14 discussed in the various patents and, you know,
15 technologies that are brought up. And this is why I'm
16 being very cautious.
17 Q But as far as how you, Dr. Kurfess, use those
18 two words in this paragraph, that explanation that you
19 just gave, that's your opinion.
20 MR. HART: Object to form.
21 A Again, I wasn't asked to form an opinion on
22 this. I'm just telling you, yeah, when I say that's

1 what we're talking about, that's what we're talking
2 about. This is a brief overview, right? So is the
3 brief overview part of my report? Yes.
4 You know, my main technical focus really
5 starts when I take a look at the, you know, the
6 proposed grounds and so forth.
7 MR. HART: Can we take a bathroom break?
8 MR. THOMAS: That works for me.
9 THE WITNESS: Sure.
10 THE REPORTER: We're off the record.
11 (Recess 10:12 a.m. to 10:21 a.m.)
12 THE REPORTER: We're on the record.
13 Q (By Mr. Thomas) Welcome back, Dr. Kurfess.
14 Did you discuss the substance of your testimony with
15 counsel on that last break?
16 A No.
17 Q Okay. And you understand that the IPR
18 proceeding, you're not permitted to do that while
19 you're on the clock for the deposition?
20 A Yes.
21 Q In the course of preparing for this -- for
22 your declaration and for this deposition, you've read a

1 number of publications that relate to web handling; is
2 that right?
3 A Yes.
4 Q For example, Muller, Jordan, Waffner,
5 Fukuchi, Freyer, Fessler, Krohnert, GEA438 and DePoi
6 all have web handling disclosures?
7 A Yeah, I believe so. Uh-huh.
8 Q And you were saying earlier that
9 independently, you have some industry experience with
10 web handling machines?
11 A Yes.
12 Q You'd agree that using a buffer before a
13 high-acceleration process was known in the art prior to
14 the inventions in these patents, right?
15 MR. HART: Object to form.
16 A So, you know, I think it's somewhat of a
17 relative term, high-acceleration buffer and the whole
18 bit. I'd really rather focus on -- on what I have
19 written in my report. If there's a question with
20 respect to a specific technology that we go over in the
21 report that you want to point to, I'd be happy to
22 integrate it in terms of that discussion.

1 Q (By Mr. Thomas) Muller has a buffer before
2 the cutting area?
3 A Sure. You want to turn to -- shall we pull
4 up Muller and go over it?
5 Q Eventually, but at a high level, you'd agree
6 to that, right?
7 MR. HART: Object to form.
8 A Yes. Muller has a couple of buffers in it.
9 Q (By Mr. Thomas) Jordan has a buffer before a
10 cutting area, right?
11 MR. HART: Object to form.
12 A Again, I'd have to -- I'd really -- my
13 preference before we get into sort of the high level,
14 let's go right to the details. If you'd like to pull
15 it out and take a peek at it, we can take a look at it
16 and pull it out, I'd be happy to do that.
17 Q (By Mr. Thomas) Understood. But I'd
18 appreciate if you answered my questions as I asked
19 them. You'd agree that Jordan has a buffer before its
20 cutting area?
21 MR. HART: Object to form. The witness has
22 asked for a copy of the reference. If he's going to be

1 asked questions about the reference, are you refusing
2 to provide him a copy of the reference?
3 MR. THOMAS: Yes, at this point, I'm going to
4 ask my questions and you're welcome to consult your
5 report to answer them. The witness is.
6 MR. HART: He's asked for the reference
7 specifically that you're asking him about. Are you not
8 going to give him a copy of that reference? We talked
9 earlier about what you had for exhibits and what you
10 did not have. I thought you said you had copies of
11 everything you'd talk about. Do you not have copies of
12 Jordan that you could provide?
13 MR. THOMAS: At this time, I'm going to ask
14 him based on the substance of his reports and if I give
15 him copies of the references, it'll be later in the
16 day.
17 MR. HART: Okay. I think that's a clear
18 record.
19 Q (By Mr. Thomas) So based on your
20 understanding of Jordan, does Jordan have a buffer
21 before its cutting region?
22 MR. HART: Object to form.

1 A That I -- this is very important, and I would
2 rather not try and go through this out of memory.
3 Let's take a look at the documents and so forth. And
4 I'm happy to talk about it with the documents. But I
5 mean, that's why we have the information in the
6 documents in front of us, to make sure that we
7 understand what we're talking about here.
8 Q (By Mr. Thomas) On page 46 of your report.
9 This is a figure from Jordan, right, with your
10 annotations?
11 A Yes.
12 Q Does Jordan have a buffer before where the
13 paper is cut?
14 A So if I -- if I look at Jordan, we've got a
15 loop of paper that's highlighted in green. I think
16 that is 29. Yes, that loop, I would consider that a
17 buffer.
18 Q Excellent.
19 A And this, I just want to make sure, there's
20 so many different designs and what's a buffer and
21 what's -- I'm not trying to be difficult. I just want
22 to make sure that I answer the question correctly.

1 Q I understand. What about Waffner? Does
2 Waffner have a buffer?
3 MR. HART: Object to form.
4 A Again, where would you like to go to?
5 Q (By Mr. Thomas) I mean, you're welcome to
6 your report where you give your overview of Waffner.
7 A (Examines a document.) Actually, it would be
8 just so much easier. This is Waffner. Waffner Figure
9 1. It's so much easier with all these different
10 figures and all the similarities, if I could have the
11 patent right in front of me.
12 Here's Waffner, yes, we'd zero right in on it
13 and it would be so much easier.
14 Q Sure. So from that figure 1 of Waffner that
15 you're looking at right now, can you tell whether
16 Waffner has a buffer?
17 MR. HART: Object to form.
18 A Yes. So -- so here, we do have a -- a
19 buffer. You know, that's down here in 31. This is a
20 loop. Or, you know, a -- that allows sort of higher
21 acceleration without having to accelerate. And again,
22 this is figure 1. I would sure like to see -- yeah,

1 can I just have the patent, the Waffner patent? Is
2 there a problem with not showing me the patent?
3 Q (By Mr. Thomas) I'm curious what you need
4 the patent for.
5 A So I can take a look at the bigger picture of
6 things and so forth.
7 Q Sure.
8 A Thanks.
9 MR. THOMAS: Let me know if you all want a
10 copy.
11 MR. HART: I do, thank you.
12 Q (By Mr. Thomas) So the version I have is
13 marked as Exhibit 1006 from the '013 proceedings.
14 A Thank you.
15 (Examines a document.)
16 Q Take a look through that and let me know if
17 it changes your opinion on whether or not Waffner has a
18 buffer.
19 A No, it does not. But again, it's good to
20 have the whole context here. I know these are so
21 important and I want to make sure that we do it right.
22 Thank you.

1 Q All right. Just so the record reflects, you
2 spent probably, what, about 30 seconds looking at that
3 to make a confirmation?
4 A Yes. And that was just to make sure that I
5 understood where this was, because different systems
6 showed different elements and so forth. And I wanted
7 to make sure I'm not confusing them with any of the
8 other patents and elements in the patents, so.
9 Q I'm glad you could quickly orient yourself.
10 A Yes. I was pretty sure. I was pretty sure
11 but I wanted to be, you know, a hundred percent for
12 you.
13 Q All right. So Muller has a buffer. Jordan,
14 you point out, a buffer. Waffner, you just pointed out
15 a buffer. Fair to say, the buffers were known in the
16 art.
17 A So, again, buffers are in -- you know,
18 buffers are in the system, so clearly, if they're in
19 the systems and that's the art we're looking at, then
20 they're known in the art.
21 Q Excellent. And these buffers are all in the
22 form of a loop of material, right?

1 A At least the ones that you have brought up,
2 yes.
3 Q And in those three that we just looked at,
4 the -- the loop is not tensioned with a dancer roller
5 or a similar tensioning device, right?
6 A Yes. Correct. The loop is -- you know,
7 it's -- it is a loose loop, so it's open, and it can
8 flop around, if you will.
9 Q So loose loops were known in the art?
10 A Again, if that's our definition of a loose
11 loop. This loop that we see here, say, 31 on Waffner,
12 sure, if it's there, then it's known.
13 Q Was monitoring the length of a loose loop
14 known in the art?
15 A So, yes. You could monitor the length of a
16 loop, sure.
17 Q What were some of the known ways of doing
18 that?
19 A Well, in some instances, so, for example,
20 with Waffner, we've got -- we've got -- probably the
21 easiest thing to do is take a look at how it's
22 described here and make sure we get the numbers right.

1 (Examines a document.) So it's a vacuum
2 chamber. So it's basically an air permeable vacuum
3 chamber and as the loop gets shorter, more air is going
4 to flow through there. So more air is going to tell
5 you that, yes, the loop is getting shorter.
6 You have, for example, in Muller -- do you
7 have a copy of Muller?
8 Q That would help you understand how the loose
9 loop in Muller is specified?
10 A Well, you asked about how we sense the size
11 of a loop. And so -- I just want to specifically point
12 out where it would be, for example, in Muller.
13 Q How did Muller sense the position or size of
14 its loose loop?
15 MR. HART: Object to form.
16 A Well, I was looking at -- let's see. Oh,
17 yeah.
18 Oh, there you go. In 12, really, focusing on
19 12, there's a contacting sensor. So 12 is a smaller
20 loop on Muller. And they have a contacting sensor that
21 says, yes, when I'm -- when I'm down and I'm contacting
22 at this point, then I have got the size that I need.

1 So that's how you're measuring the size of that
2 particular small loop on Muller.
3 Q (By Mr. Thomas) Is the -- withdrawn.
4 You were, before discussing Muller's loop
5 sensing, you were discussing Waffner's, right?
6 A Yes.
7 Q Does Waffner disclose a contacting sensor for
8 sensing the position of its loose loop?
9 A No, I don't believe it does. I believe that
10 it uses the -- the pressure sensor or the vacuum sensor
11 in the flow that is in the vacuum chamber.
12 Q Why is that not a contacting sensor?
13 A Well, typically, a contacting sensor is
14 something that you would say, well, we're contacting,
15 am I making contact or not, right? So it's typically a
16 binary on-off, it can be represented by one bit of
17 information. Do I make contact, yes, no. That's the
18 real issue of a contacting sensor.
19 Q So you know, based on your skills and
20 expertise, you define a contacting sensor as a binary
21 yes/no sensor.
22 A In this particular application, sure.

1 Q And what do you mean by "in this particular
2 application"? Web handling?
3 A For measuring the length of -- for measuring
4 of length of a loop, as you asked. So. . .
5 Q You'd agree that in Waffner, the loose loop
6 does contact the sensor, right?
7 A Yes. It does contact the sensor. But that
8 is not a -- I mean, it's a sensor that makes contact,
9 but the contacting sensor basically says, do I make
10 contact or not. It's a binary sensor. And certainly,
11 the sensor in Waffner is not a contact or no-contact
12 sensor.
13 Q Because it -- it's essentially an analog
14 signal. As opposed to a binary.
15 A As opposed to -- yes, just a binary, digital,
16 on-off, one-zero signal.
17 Q Do you think a person of skill could design
18 Waffner sensor to be binary?
19 MR. HART: Object to form.
20 A Yeah, I'm not -- maybe if you could clarify
21 that question. Because I'm thinking that could go all
22 sorts of different directions. Could you clarify that

1 in terms of what you would like to see in input versus
2 output?
3 Q (By Mr. Thomas) Yes, so in Waffner, where
4 the loose loop is small, the pressure in, looks like,
5 box 50 is relatively close to atmospheric pressure
6 because the holes are opened, right?
7 A Yes.
8 Q And when Waffner's loop is big, the pressure
9 in box 50 is relatively close to a vacuum pressure
10 because the holes are clogged. Covered.
11 A Yes.
12 Q And I'm certainly not a skilled person in
13 this art, but it seems to me, like, you could put a
14 binary sensor in there if the pressure is above a set
15 point, it's returning false. If the pressure drops
16 below that set point, it returns true, and there's your
17 true-false value of, is the loop big enough.
18 A Yeah, I -- yeah, I see what you're getting
19 at. I think a person who's got some background like,
20 you know, a POSITA or a POSA or whatever we're calling
21 them now, they wouldn't go that direction because when
22 you open up -- first of all, you mention the holes.

1 So when you've got multiple holes, are you
2 going to say, yeah, it's covered or not covered. If
3 you would go down to a single hole, you'd say, covered
4 or not covered. But the response, and it depends on
5 what the vacuum looks like and the whole bit.
6 But the response time is going to be very,
7 very slow in comparison to, let's say, an optical
8 trigger and so forth. And by the way, it's going to be
9 an awful lot more expensive. These things are probably
10 pennies but certainly less than a dollar. The
11 electrical one. The contacting sensor.
12 So, yeah, I mean, possibly it could be done
13 with lots of caveats, but I don't see where you would
14 do it.
15 Q So maybe not the best way? Maybe not the
16 cheapest way. But could be done?
17 A Definitely not the best way. Definitely not
18 the cheapest way. And I would think if somebody said,
19 Hey, we'd going to do it this way, they'd be a little
20 bit embarrassed because people would say, No, you don't
21 want to do it that way. Just stick your sensor in here
22 and go for it.

1 Q Embarrassment aside, it would be within their
2 skills to do it.
3 MR. HART: Object to form.
4 A Again, anything is possible. But nothing is
5 easy. And so the reality is, it just wouldn't be done
6 that way. I mean, I would design -- even with my
7 undergraduate students I would bounce it back and say,
8 No, you don't need this.
9 Q (By Mr. Thomas) Sure. I think you were
10 speaking metaphorically, but certainly, it's not true
11 that anything is possible. There were limits to the
12 skill and ability of a person of skill, right?
13 A Yes. Yes.
14 Q There are some things that a person of skill
15 just simply could not do of ordinary skill.
16 A Oh, certainly.
17 Q Are you saying that converting Waffner's
18 sensor into what you described as, your words,
19 "contacting sensor," but which you've explained as a
20 binary sensor, are you saying that converting Waffner's
21 sensor into a binary sensor is beyond the skill of an
22 ordinary skilled person?

1 MR. HART: Object to form. Lacks foundation.
2 Lacks relevance.
3 A So I think the real question is, well, what
4 are the specifications? What do you want out of it?
5 You know, What's the response time? You know, what are
6 the specifications? I can tell you, if you said, I'm
7 just going to use an optoelectronic, just, I'm covered,
8 I'm not covered, it's going to be able to respond much
9 faster than any of your mechanical systems, no doubt
10 about it.
11 With what you're proposing, I would really
12 need to know, well, okay, how fast do you need to
13 respond? What's your budget? All sorts of different
14 things.
15 So if you want to provide that type of
16 information, we could probably go back and say, here
17 are the type of calculations you need to do to see if
18 you could do that, even the size of the hole, the power
19 of the motor and so forth. It does get to be a very
20 complicated thing that you're asking because it's --
21 it's not a particularly good approach.
22 Q You haven't done those calculations.

1 A Absolutely not.
2 Q So fair to say that you don't have an opinion
3 on whether a person of skill would expect success in
4 making that modification?
5 MR. HART: Same objections.
6 A I think a person of ordinary skill in the art
7 would not do it that way, period. And if they would do
8 it that way with design review, it would be chopped
9 down pretty quickly.
10 But if they have the right skill set, they
11 could pull it off. Whether it would meet the needs of
12 this machine is quite questionable, but we don't know
13 what those specifications are.
14 Q (By Mr. Thomas) But aside from that
15 modification, you agree that this type of sensor -- you
16 know, unmodified, as an analog sensor, would work for
17 detecting the position of the loop, right?
18 MR. HART: Object to form.
19 A It certainly, in this particular case, for a
20 Waffner system, yeah, it's great that detecting the
21 position of the loop, that's what they use it for. If
22 we're talking about something, you know, like, Muller,

1 there's a very small space there, putting that in
2 there. There's no vacuum space in Muller. It wouldn't
3 make sense to put it in there at all.
4 It's great for what it's used for in Waffner,
5 but it wouldn't make sense to put it in this region
6 where 12 is identified.
7 Q (By Mr. Thomas) Okay. Detecting the
8 position of a loose loop in these web handling
9 applications, a person of skill would understand that
10 that's a -- some sort of a known problem, a known thing
11 that has to be solved in engineering these systems,
12 right?
13 A Well, I think detecting or estimating, right?
14 Because I think that we have some that don't have
15 detection in them, but they've got to estimate the size
16 of the loop because you don't want to have it too large
17 and run over. Or you don't want to have it too small
18 and tear. So that's important, yes.
19 Q Maybe another way of coming at that.
20 The Weber inventors of the '013 and '823
21 patent, their innovation wasn't the idea that you
22 should be detecting the position of your loose loop.

1 Is that correct?
2 A You know, I have not really looked at those
3 patents to say, yeah, what's the innovation. My job
4 was to take a look at, you know, Jobin's report and
5 just take a look at the combinations that he put
6 together. So I'm not ready to comment on that question
7 or opine on that question.
8 Q Okay. What about using a vacuum to add a
9 breaking force on web material as it's exiting a loose
10 loop. Is that known from the art?
11 MR. HART: Object to form.
12 A Again, if you want to zero in on a
13 specific -- one of the specific patents, I know one of
14 them uses it, happy to talk about that, yes.
15 Q (By Mr. Thomas) Sure.
16 A Right.
17 Q I'll hand you -- a good example of that is
18 DePoi. And that is -- was Exhibit 1006 in the '823
19 proceeding, is that the version I'm handing you.
20 A (Examines a document.) Yes. Yes. So I
21 agree, yes. You do have a braking capability in that
22 at the exit of the -- of the loop.

1 Q Looking at -- I think it's figure 3 of the
2 DePoi -- it's the one that's on the cover as well. The
3 web here is traveling from left to right, right?
4 A Correct.
5 Q And on the right, there's -- looks like a
6 nipped pair of 30 nipping rollers?
7 A Yes.
8 Q And you understand that those nipping rollers
9 are relatively rapidly accelerating and decelerating
10 the paper out of the loop and feeding it toward a
11 cutter?
12 A Yes.
13 Q And you know, a POSA would know and
14 understand that one problem with doing that at the
15 rapid accelerations is, when those nip rollers came to
16 a rapid stop, the paper itself might have inertia and
17 continue to rise out of the loop store, right?
18 A Yes.
19 Q And so it was known to address that problem
20 by using a vacuum to apply a braking force right at
21 where the paper is exiting the loop.
22 A Yes. Correct.

1 Q Okay. Would that vacuum break provide
2 additional stability to the paper leaving the loop?
3 A Yes, I would think that it would provide some
4 additional stability, sure.
5 Q And it would provide sort of a zero-tension
6 situation where paper is bunching up behind the nip
7 roller 30.
8 A Could you restate that one? Because when it
9 bunches up, that tells you that there is no tension
10 that it's more compression.
11 Q Yes, I'll restate.
12 A Please.
13 Q That would provide sort of a -- withdrawn.
14 That would prevent sort of a zero-tension
15 situation where the paper is bunching up.
16 A Yes, the zero-tension situation. I think
17 that that -- yes, or at least pressure situation. Yes.
18 Q A person in skill would understand that the
19 pressure situation, low tension result, is undesirable.
20 A Yes.
21 Q And could you turn to page 8 of your
22 declaration.

1 A Yes.
2 Q And your opinion is, and you state this in
3 paragraph 19, that you are at least a person of
4 ordinary skill in the art, as reflected in the '013
5 patent, right?
6 A Yes, correct.
7 Q And because they share a specification and
8 are similar, would you say that also applies to
9 the '823 patent?
10 A Yes.
11 Q Not specifically mentioned here, but you're a
12 person of skill in both. That's your opinion?
13 A Yes.
14 Q How would you define a person of ordinary
15 skill in the art with respect to these patents?
16 A Well, I think that it was -- I don't think
17 actually it's in my report. I think I just agreed with
18 what we had stated before. And -- or not with what we
19 had said. I think the parties have agreed with it. I
20 think it was a bachelor's degree with a couple of years
21 experience or maybe less than a bachelor's degree in
22 the area, but with several more years of experience. I

1 can't recall off the top of my head on that one.
2 Q Is that something you reviewed before writing
3 this declaration?
4 A Yes. It was in a couple of different
5 documents.
6 Q And I believe for purposes of this IPR, the
7 board, in granting institution of IPR, that they
8 adopted this definition of a person of skill, which is,
9 1: a bachelor's degree or equivalent in mechanical
10 engineering or a similar field and at least two years
11 of experience working as an engineer or similar role on
12 food processing and/or packaging systems or in a
13 similar field.
14 Or 2: at least seven years of experience
15 working as an engineer or similar role on food
16 processing and/or packaging systems or in a similar
17 field. Do you recall that?
18 A Yes, I do.
19 Q Certainly, you have a bachelor's degree --
20 A Yes.
21 Q -- in mechanical engineering?
22 A Yes.

1 Q And have you spent two years, at least,
2 working as an engineer?
3 A Yes. Easy question.
4 Q Have you spent two years working as an
5 engineer on food processing systems?
6 A I'd say probably at this point in my career.
7 I mean, I've been in -- I've been an engineer at least
8 in my bachelor's -- '86. I'd say over these 38 years,
9 I've had at least two years of experience in engaging
10 with some of the food processing equipment but
11 certainly way more than that on the packaging side.
12 Q Okay. So you're not relying on the little or
13 in a similar field parenthetical. You're hitting this
14 definition from at least the packaging system and
15 probably also food processing?
16 A Yes.
17 Q Okay.
18 A But we could do it more or in a similar
19 field, too. There's lots of similarities as we talked
20 about.
21 Q An impressive resume.
22 A I keep busy.

1 Q Do you have any disagreement, by the way,
2 with how the Board drafted or defined a person of skill
3 in this manner?
4 A No. I -- I thought it was quite fine. Yeah.
5 Q Can you take a look at paragraph 28 of your
6 report.
7 And I think in this paragraph, you're
8 describing somewhat how the system that the patents
9 shared specification sets out, right?
10 A Yes.
11 Q How does the loop sensor in the patent
12 function?
13 MR. HART: Object to form.
14 A Not a hundred percent sure. So the -- how
15 does it -- can you be a little bit -- first of all, I
16 actually didn't look at loop sensor functions or
17 anything like that. My job was to look at Mr. Jobin's
18 report and take a look at what he had to say and opine
19 on what he had to say there. Not so much on how the
20 loop sensor functions.
21 Q You read these patents.
22 A I did.

1 Q Cover to cover?
2 A I did.
3 Q And did you develop an understanding of how,
4 in the patents, the position of this loop is sensed?
5 MR. HART: Object to form.
6 A Again, a rudimentary understanding. But my
7 focus was on what Mr. Jobin had written, so I really,
8 you know -- you know, I'm not comfortable opining
9 something -- on something I wasn't asked to put in my
10 report and discuss how this works; how the sensor
11 works.
12 Q (By Mr. Thomas) So acknowledging that
13 there's a rudimentary opinion, I would like to know
14 what your rudimentary understanding of the sensing
15 paradigm is in the patent.
16 MR. HART: Object to form.
17 A So -- so. . . one more time on that question.
18 I will do my best, but understand, this is not what I
19 was asked to do. And so I haven't thought about this
20 in quite some time. You look it over and say, okay, I
21 see that, and off you go. So, you know, and I know
22 this is an important thing, right? So I don't want to

1 have someone say, Well, this is what their expert said.
2 I think that's the key thing here, probably.
3 We can measure it, you know, and it's along these
4 lines, you know. But to sort of go to the technical
5 details, I'm just not comfortable with that at this
6 point in time.
7 Q (By Mr. Thomas) To the best of your ability.
8 How does the patent specification describe detecting
9 the position of the loop?
10 MR. HART: Object to form. Lacks foundation.
11 A (Examines a document.) Okay. So I'm just
12 going right back to the patent here. One more time on
13 the -- one more time on your question, please?
14 Q (By Mr. Thomas) Yes. Dr. Kurfess, to the
15 best of your ability, how does the patent specification
16 describe detecting the position of the loop?
17 A Okay.
18 MR. HART: Object to form.
19 A So patent specification, says right here in
20 column 13, was it line 32, The control device 39 can
21 recognize by means of mention and pressure sensors in
22 the vacuum chamber 69, which the vacuum chamber 69 is

1 covered by a material web 19, and which is not.
2 And the measure for the current size of the
3 material loop 20 in the loop region of the loop store
4 61 can be derived from this information in a simple
5 manner with sufficient accuracy. The material web 19
6 drawn as a dashed line is shared with maximum loop
7 size.
8 I think we can go on from there. Does that
9 work for you? That's how the specification describes
10 it.
11 Q (By Mr. Thomas) Okay. Is that similar to
12 how you were just discussing Waffner detects the
13 position of its loop?
14 MR. HART: Object to form.
15 A (Examines a document.) So I have not
16 compared those two. I was not asked to compare those
17 two. And so, I mean, I would have to take a look at
18 it. Yeah, I just -- I just couldn't tell you. Yes,
19 it's using pressure differential. You know, the '823
20 and the '013 patents are using multiple chambers, so
21 there's lots of different ways. I don't know. Waffner
22 doesn't talk about chambers and so forth.

1 Again, I wasn't asked to compare it to, you
2 know, I wasn't asked to look at Waffner in comparison
3 to the patent. So I really just don't have the
4 information in front of me to say, yeah, they work in
5 the same way. If you want to have a general, yes, it's
6 a pressure differential, they're using pressure.
7 But I don't know in terms of accuracy,
8 capability, what they're doing, speed of response, all
9 of those types of things. I couldn't tell you. I just
10 haven't considered it.
11 Q Okay. So if Mr. Jobin had an opinion in this
12 case that Waffner's sensor works in a similar way to
13 the sensor described in the patent, he would be the
14 only expert who has given opinion testimony on that
15 topic, right?
16 A So if -- I have no idea. I don't know if any
17 other experts have given it and so forth. But if
18 that's his opinion, that's great. That's his opinion.
19 You know, that's not what I'm addressing here.
20 Q That's his opinion. You don't have an
21 opinion on that topic?
22 A I don't have an opinion on sort of the

1 comparison between the '013 or the '823 patents.
2 Q And I'll represent that you are the only two
3 experts to have given testimony in these IPRs. Does
4 that comport with your understanding?
5 A I don't know. But if you say that's true, I
6 have no reason to doubt you.
7 Q Okay.
8 A And again, my -- just to be real clear and I
9 know you know this, but I want to make sure it's clear.
10 I wasn't asked to do anything but look at his report
11 and say, here's how I put things together. And my job
12 was to look at it and say, Does this make sense? Do
13 they fit together? And so forth.
14 Q So if Mr. Jobin has testified that a sensor
15 built according to Waffner's principles would meet
16 certain claim elements of the challenged claims, you
17 don't have a counter-opinion to that.
18 MR. HART: Object to form.
19 A Again, haven't been asked to look at it, so I
20 couldn't say whether I agree or disagree. I haven't
21 looked at what he said. I haven't looked at the
22 technologies and so forth. So I just have been asked

1 to do it.
2 Q (By Mr. Thomas) Okay. Your opinion was just
3 whether the motivations to combine that Mr. Jobin
4 discusses are valid.
5 A If -- if they're valid, if they achieve
6 what's needed to be done, if -- excuse me, a person of
7 ordinary skill in the art would do it; if it's
8 mechanically feasible; if it's economically feasible.
9 All of the things that are laid out in my report. I'm
10 happy to discuss those.
11 Q What do you mean by mechanically feasible?
12 A Well, you know, are they compatible? So, you
13 know, would you take one of these big systems, as we're
14 talking about. . .
15 So if we go back to Muller, Mr. Jobin is
16 talking about inserting this -- you know, inserting
17 these other apparatus, Waffner into the region
18 identified as 12, which I'll call the small loop area,
19 so this is small. Nominally, as I think about it, this
20 is a small buffer and it holds one interleave? Is that
21 a single interleave?
22 Q I think with an F, I've seen it, but perhaps

1 there's no convention. Interleaf?
2 A Interleaf. Yes. It holds one interleaf,
3 which I think about as a slice of cheese. So this is
4 pretty small. And he's saying, we're going to put
5 these big pieces of equipment like Waffner into that
6 small space. So how feasible is that? I don't think
7 you would look to put that in there. Do you need it?
8 No.
9 But they are addressing something that's
10 taken care of by Muller, right? Any one of those.
11 Muller has got a machine that takes care of the
12 low-frequency or the large deviations in the loop
13 with -- with 8 and then the small deviations for the
14 height -- high-level accelerations for each interleaf
15 with 12. And then there's the mention of any of the
16 vacuum systems and so forth. So now you're also
17 inserting a vacuum system.
18 Really, this is what we're looking at. What
19 I'm saying is, would you put it in there? It doesn't
20 make sense to put it in there. It doesn't fit in
21 there. Maybe you could expand the machine and then you
22 would need to add a vacuum system to put in there. It

1 would be a lot of expense to do all of that to replace
2 number 12.
3 And I think if anybody would make a
4 recommendation like that on this type of machine,
5 they'd send it back to the drawing board.
6 Q The businessmen in charge would shut them
7 down.
8 A I think the businessmen and engineers in
9 charge would shut them down and anybody who had to
10 maintain that machine would shut them down. And
11 anybody that would have to maintain that machine would
12 shut them down.
13 Q Okay.
14 A Yes.
15 Q One of the things you did consider, form an
16 opinion on, was whether the embodiments of the prior
17 art references would be put together.
18 A Yes.
19 Q Whether the parts that you believe Mr. Jobin
20 identified were physically combinable?
21 A Yes. Yes. So let's say putting Waffner into
22 Muller.

1 Q Okay. Another thing you looked at is
2 whether -- what a person in skill would have a reason
3 to do that.
4 A Yes.
5 Q Okay.
6 A And then, and of course, the other thing is
7 how to do it. And I'm really not so concerned about
8 how to do it. My understanding is that Mr. Jobin --
9 did I pronounce his name right?
10 Q I think so.
11 A Mr. Jobin should have provided that, this is
12 how you would do it, and he really didn't provide that
13 type of information. That's pretty vague.
14 Q So he left some details of the implementation
15 up to the POSA and didn't --
16 A He left a lot of details of the
17 implementation up to the POSA, yeah.
18 Q Okay.
19 A This was not a plug-and-play type of thing,
20 like sticking the USB stick and getting an extra five
21 gigabytes of RAM on your system or memory on your
22 system, yeah.

1 Q You have no opinion as to whether the claims
2 of either patent required a pressure sensor?
3 A No. I wasn't asked to opine on that. I
4 really didn't look into that.
5 Q Okay. So paragraph 42 of your report or I
6 guess the section heading immediately before that
7 subsection B.
8 Do you know why it's relevant whether or not
9 Waffner does or does not teach a pressure sensor?
10 A You know, I couldn't tell you off the top of
11 my head. I just know that Waffner doesn't teach it.
12 So. . .
13 Q Why doesn't Waffner teach a pressure sensor?
14 A Because there is no pressure sensor in there.
15 I did not see a pressure sensor in Waffner.
16 Q What's a pressure sensor?
17 A It's a sensor that then senses pressure and
18 provides you with -- you know, with a reading on the
19 pressure.
20 Q Does it have to be electronic?
21 A Well, at some point in time, you know, at
22 some point in time, you probably converted it into an

1 electrical signal, you know, that goes into your
2 control system.
3 Q Okay. But a pressure sensor doesn't have to
4 be electronic.
5 A Well, I mean, I think you have a -- you have
6 your -- you've probably taken your tire gauge, right,
7 and you're there, you've taken a look at it and say,
8 Okay, I see what the pressure is, although your reality
9 is, your eyes are turning that reading into an
10 electronic signal that goes to your brain. So yeah.
11 Q So what's the sensor there? The thing I
12 stick on my tire or my eyes?
13 A I think it's a combination. Your eyes are
14 your digital converter.
15 Q Maybe, right? Speaking outside the contents
16 of the patent, I'm sure.
17 A Yes, indeed. I did not opine on that.
18 So. . .
19 Q Okay. Waffner does have the, I think it's
20 called, like, a bellows that expands when there's low
21 pressure and contracts at high pressure?
22 A Yes.

1 Q That's not a pressure sensor?
2 A No, I mean, that's just a -- it's an
3 actuator. So you're just responding to the physical
4 presence of that. It's like a spring and so forth.
5 Yeah.
6 Q What if I was looking at it? Would my eyes,
7 combined with the bellows, be a sensor?
8 A You know, if you could turn around and say,
9 yeah, here's the pressure that we have and the whole
10 bit and do something with it. But I think the reality
11 is, no, that's a closed pneumatic system that we've
12 been talking about. It just functions based on laws of
13 physics. There's no signal coming out that's going to
14 a controller to make any modifications to the process.
15 Q If a pressure transducer was added to
16 Waffner's system, would that be a pressure sensor?
17 A I mean, it depends on what you want to do
18 with the transducer. A transducer converts energy from
19 one form to another. A transducer, that bellows could
20 be your transducer, right, because you're putting
21 pressure in there and it's expanding and it's moving a
22 little lever, right? So that's a pressure transducer,

1 not a pressure sensor. So you're not sensing pressure
2 and so forth.
3 Q Okay. What could you add to Waffner to sense
4 the pressure levels that are changing as that loop
5 changes?
6 A So, I mean, there are a variety of pressure
7 sensors that you have. I mean, it -- a typical
8 pressure sensor is -- it's like a little tin can and
9 it's got a membrane on it. The higher the pressure the
10 more the membrane deflects. And you measure that
11 deflection and it's calibrated to a level.
12 And so then the question is -- and that
13 sensor would output typically an electric signal that
14 you would typically pipe into your wire into your
15 control system and take some action from that -- from
16 that signal into the control system.
17 Q And if Waffner, if the sort of sensing
18 principles of Waffner were used, with that design,
19 where there is actually a pressure sensor that is
20 outputting a voltage in response to those holes being
21 covered, would that be a contact sensor or not?
22 MR. HART: Object to form.

1 A One more time. You took a turn that I was
2 not -- was not expecting.
3 Q (By Mr. Thomas) We're going back to contact
4 sensor.
5 A No worries. A full-contact discussion here.
6 Q That's right. So if Waffner's technique,
7 instead of incorporating the tubes and bellows and
8 variable sheets, which is not something I know what it
9 means, but I assume you might.
10 A I saw that terminology and I did look it up.
11 I can't recall what it does, but I have an idea. Go
12 ahead.
13 Q If Waffner's technique were to instead use
14 sort of this voltage based pressure sensors that you
15 described, would that be a contact sensor?
16 MR. HART: Object to form.
17 A Again, I do not think so. You're going to
18 have an analog voltage signal coming out, not yes, I'm
19 contacting or, no, I'm not contacting. So this would
20 be a much more complex system than, you know, just a --
21 you know, than a pressure sensor outputting a voltage.
22 And that pressure sensor is also going to be

1 a whole lot more expensive and it's going to be
2 expensive to read because you have an analog to digital
3 conversion. With a contact, just yes/no, I can feed it
4 into my digital system, my computer, that says 1 or 0,
5 and the computer's happy with that.
6 Q (By Mr. Thomas) So as the paper is
7 contacting the surface and covering the holes and
8 there's the change in pressure, as the voltage sensor
9 is -- is detecting that change --
10 A Pressure sensor. As the pressure sensor is
11 detecting that change.
12 Q Good correction. So as the paper is
13 contacting the surface and covering the holes and
14 there's the changing pressure and the pressure sensor
15 is detecting that change, that would not be a
16 contacting sensor, as you use the term.
17 MR. HART: Object to form.
18 A Again, that -- that is -- it's detecting the
19 change. It's creating a voltage that is somehow
20 related to the pressure. So that's going to be a
21 numerical range as opposed to contact or no contact.
22 Q (By Mr. Thomas) So not a contacting

1 sensor?
2 A Not a contacting sensor.
3 Q Do you think that an ordinary -- withdrawn.
4 Do you think that an ordinarily skilled
5 person would agree with that assessment?
6 A Yes, I think so, especially if you're talking
7 about it being inserted in 12. I don't think anybody
8 would put that type of an arrangement into Muller to
9 replace the contacting sensor.
10 It just -- it's way too big. It's way too
11 expensive. And it just doesn't make sense.
12 Q So not getting into the motivations, but just
13 in terms of definitionally, you think that an
14 ordinarily skilled person would agree that detecting
15 the pressure change continuously as those holes are
16 covered, a skilled person would not call that a -- a
17 contact sensor.
18 A Yes.
19 MR. HART: Object to form.
20 THE WITNESS: Sorry.
21 A You know, certainly not in this context,
22 right. We've got a contacting sensor that just says,

1 yeah, I'm covered; no, I'm not. To put the whole
2 vacuum chamber, the vacuum that pumps, the sensors,
3 everything in there, I mean, you're talking in orders
4 of magnitude more expense in size and everything.
5 Q (By Mr. Thomas) If someone told you that, in
6 their view, detecting the pressure change as these
7 holes are covered did meet the definition of a contact
8 sensor, would you question their qualifications as an
9 ordinarily skilled person?
10 MR. HART: Object to form.
11 A I -- I would question their reasoning, you
12 know, and then hear them through, and depending on
13 their answer, then I might question their skill set.
14 But I would question their reasoning and ask them for
15 more exploration, because, again, that's something that
16 doesn't make sense.
17 Q (By Mr. Thomas) Can you flip to paragraph 34
18 of your report?
19 A Yes.
20 Q And paragraph 35, I think. But it's on the
21 same page. At the bottom of that page, you talk about,
22 you quote from Muller contacting sensor, right?

1 A Yes.
2 Q What does Muller say about its contacting
3 sensor?
4 A I'd have to go back and take a look at -- I
5 have to take a look at what Muller says.
6 Q Please do. It's paragraph 48 of Muller.
7 A Thank you. Save some time.
8 (Examines a document.) There's one long full
9 paragraph I'm seeing. Do you have a line number I can
10 get to it?
11 Q Not really --
12 A That's okay.
13 Q I can find it pretty close from memory.
14 I believe it's on the top of page 4, line 3.
15 A Oh, my gosh. Paragraph 48 goes into page --
16 Q It's a three-column long paragraph or it
17 spans three, at least.
18 A The length of the loop, so here, they're
19 talking about -- yeah, the length of loop in 12 is
20 monitored by a contacting sensor. Yeah. So the length
21 of the loop is preferably monitored in particular by a
22 contacting sensor. This buffer preferably has nearly

1 scrip guide 13, et cetera, et cetera.
2 Q Right. So it looks like there's one sentence
3 in Muller that talks about preferably monitored in
4 particular by a contacting sensor, right?
5 A Yes.
6 Q In particular, does it say it has to be a
7 contacting sensor, right? It's just a suggestion?
8 A Yeah. But it's a great suggestion. I mean,
9 you know, as we've already discussed, you know, there
10 are other ways to do it, but you just can't beat this
11 one. I mean, really. You're talking -- this cannot
12 cost more than a dollar to implement.
13 Q Muller's found the cheapest way to do it.
14 A I would agree with that.
15 Q And doing something that's, you know,
16 detecting pressure, instead that's going to raise your
17 price a little bit.
18 MR. HART: Object to form.
19 A So the one -- I think it's the cheapest way.
20 There might be cheaper, but this is a really
21 inexpensive way to do it. It is really easy to
22 implement. It's very robust. For all sorts of

1 reasons. And this is why you would use a contacting
2 sensor here. Yeah.
3 Q (By Mr. Thomas) Does Muller say anything
4 else about preferably using a contacting sensor other
5 than just in this one sentence?
6 A That, I don't know. If you found it, you
7 could let me know, but I don't recall. But it's been
8 some time since I've gone through all the details of
9 Muller.
10 Q Yes, I'll represent that I haven't found it,
11 and I don't see any citation in your report to a
12 different --
13 A Okay.
14 Q Do you think that this sentence in Muller
15 would teach a person of skill away from exploring other
16 types of sensors?
17 A What do you mean by teach away?
18 Q Would it discourage further investigation?
19 A I mean, I think you look at it and say, yes,
20 okay. It's -- it's like any simple switch in the
21 machine. You would look at it and say, oh, that's a
22 switch, yes, of course. Unless there's really some

1 very good reason for doing it another way.
2 But in general, you'd look at this and you'd
3 just check the box.
4 Q Okay. So Muller states a preference for this
5 type of contacting sensor which you believe means a
6 yes/no --
7 A Yes.
8 Q But it doesn't warn against other types of
9 sensors.
10 MR. HART: Object to form.
11 A Yeah, I don't know. I think it says what it
12 says. They're going to use a contacting sensor, and
13 you read that, and you're saying, of course.
14 Q (By Mr. Thomas) And what it says is, that's
15 the preference.
16 MR. HART: Object to form.
17 A Again, it's -- yeah, it says the length of
18 loop is preferably monitored in particular by a
19 contacting sensor. So. . . maybe the length of loop is
20 preferably monitored, so that's the preference, is to
21 monitor it. And you do that, in particular, using a
22 contact sensor. You know, there's a comma in there and

1 I know you guys love punctuation.
2 Q (By Mr. Thomas) That's true. It's why I
3 chose law school.
4 A Oh, boy.
5 Q In any event, references like Waffner show
6 that there were other ways to measure the position of a
7 loop.
8 A Yes. They show that there are other ways to
9 measure the loop, which is great. But again, you know,
10 that doesn't make a whole lot of sense, trying to
11 insert that into Muller. There are lots of ways to do
12 it. But I think Muller has got it pretty much down pat
13 in trying to install this system from Waffner into 12
14 over in Muller. Just -- it just doesn't make sense
15 across the board.
16 Q I'm going to hand you what's been previously
17 marked as Weber Exhibit 2008 in the -- this version is
18 from the '258 proceeding.
19 A Okay.
20 Q But I believe it's the exhibit to both of
21 them. And this is an excerpt from the sensor
22 technology handbook as edited by John S. Wilson. Is

1 that right?
2 A Looks like it, yeah.
3 Q All right. And if you turn to page 322.
4 Page 4 of the exhibit, I suppose. 322 of the book?
5 A Yes.
6 Q You see that there is a grouping of
7 noncontact device?
8 A You mean in these bullets over here
9 (indicating)?
10 Q That's right.
11 A Yes.
12 Q And I guess whoever drafted this chapter, but
13 as edited by editor in chief, Mr. Wilson, included in
14 the noncontact devices is a photoelectric sensor.
15 A Yes.
16 Q So this reference suggests that a
17 photoelectric sensor is a noncontact sensor; is that
18 right?
19 A So I think you have to take a look at the
20 photoelectric sensor. What you're looking at is when
21 is it contacting the sensor. So, yes, it's not
22 contacting it. In fact, you wouldn't contact the

1 sensor. That photoelectric sensor would probably be
2 behind a plate of Plexiglas or a Lexan or something
3 like that. But, it's detecting that, you know, it's on
4 top of it. It's just a nontouching sensor, but it's
5 saying, yes, I am there.
6 Q So it's a binary sensor, yes/no.
7 A Yes.
8 Q But regardless of the folks who put this
9 reference together, grouped it with the noncontact
10 sensors.
11 A Yes. Again, it's listed under noncontacting
12 sensors, but, you certainly, when you're using it, hey,
13 am I contacting this part of the machine and am I
14 contacting at this length and so forth.
15 Q And maybe coming at it from the other end,
16 this chapter has a type of position sensor also has a
17 group called contact devices?
18 A Yes.
19 Q And one of those is a resistive position
20 transducer.
21 A Yes.
22 Q Would that be a binary, yes/no?

1 A No, that's something like a potentiometer.
2 So it would change -- the resistance changes as you
3 either move linearly or rotated if you put a -- and if
4 you use it in a voltage divider situation. We won't
5 get into the details here, but that is pretty much
6 analog, and it will give you a range of resistances.
7 Q So authors of this chapter, they thought the
8 analog sensor, that would still count as a contact
9 sensor.
10 A Yes, but I guess you have to be contacting
11 and driving this up and down. Although, again -- yes.
12 It's moving the resistor around, sure.
13 Q So it seems to me like the grouping that
14 these authors used was, if the material being detected
15 has to touch the sensor, that's a contacting sensor.
16 If the material being detected does not need to touch
17 the sensor, that's a noncontact sensor.
18 A So I think, yeah. I think there's some
19 semantics going on here. If I'm not going to contact,
20 then it's noncontacting. If I'm going to contact, it's
21 contacting. But what we're looking at here in Muller
22 is, do we contact this point, and we're putting this

1 loop in 12, I believe, in when that small loop gets to
2 this point, it's contacting that point, and then you
3 say, yes, it's big enough, the interleaf is big enough
4 and be ready to be ejected and sliced. Or sliced and
5 ejected, however it goes.
6 But the idea is not so much, am I contacting
7 the sensor; it's not that I'm contacting the sensor,
8 but I'm contacting the particular point and I'm using
9 the sensor to identify that I've contacted that point.
10 Q Okay. But your opinion is that a person of
11 ordinary skill in the contacting sensor from Muller
12 would take from that that it's your dichotomy of, is it
13 binary? Is it analog? And would not interpret that as
14 appears to be the dichotomy used in the handbook, which
15 is, does the sensor touch the paper? Or does the
16 sensor use something like ultrasound, lights,
17 induction, to detect the paper without touching it?
18 MR. HART: Object to form.
19 A So once again, if you look at -- if you look
20 at the -- at the -- at the patent, in the segment, the
21 length of the loop that is preferably monitored, in
22 particular, by a contacting sensor, yes, that's exactly

1 what they would -- that's exactly what they would say.
2 And, you know, it's not going to be, for
3 example, a limit switch. A limit switch is going to,
4 that's one of your contacting sensors, you're certainly
5 not going to use a limit switch there. It's too slow,
6 too high mass. You're going to use that photoelectric
7 sensor because it is -- you could all say it's a prox
8 sensor.
9 The difference between a prox sensor and
10 photoelectric sensor, that's going to be a matter of
11 interpretation because a proximity sensor says, Yes,
12 I'm in proximity. So that could be a photoelectric
13 sensor as well.
14 So I think here, this is -- this is really
15 taking it out of context. You have to look at it in
16 the context of what they have, you know, what he's
17 written over here. And I'm using a contact sensor.
18 Yes, it's long enough and it's going to be a
19 photoelectric. Could be, you know, also be called a
20 proximity sensor.
21 Q (By Mr. Thomas) So then the person of skill
22 you sort of put yourself in the shoes, then, would see

1 in Muller, hey, the preference is use a contacting
2 sensor. And then they would open the sensor technology
3 handbook and ignore the two options listed under
4 contact devices and instead choose one of the options
5 listed under noncontact devices.
6 MR. HART: Object to form.
7 A Yeah, no. I don't agree with that. Here's
8 the bottom line. That person would look at it and say,
9 Oh, contacting sensor. Must be photo-optical sensor.
10 They wouldn't bother opening the book. If they opened
11 the book, they would not have the right skill set.
12 There's no doubt about it.
13 Q (By Mr. Thomas) Why did you cite the book as
14 an exhibit, then?
15 A This is an example.
16 Q That contradicts your POSA.
17 MR. HART: Object to form.
18 A No, the POSA is not -- if the POSA opens the
19 book up and, like, yeah, photoelectric. They're not
20 going to say, Oh, gosh, this is non-contacting, this is
21 contacting, so it can't be. It's photoelectric. And
22 again, you've got a contact sensor, but I guarantee you

1 that the actual sensor, all right, and this is really,
2 you know, I want to really make this point.
3 The actual sensor that's doing the actual
4 photoelectric sensing if it's sitting right there in
5 the machine, it's not contacting that paper. There's
6 going to be some protective coating on it that's going
7 to keep it from, you know, from the environment and so
8 forth. So still a contacting sensor. When it comes in
9 contact with this position, we're good to go.
10 Q (By Mr. Thomas) Right. Your POSA would use
11 a contacting sensor that, you wanted to be clear, would
12 have no contact with the paper. Right?
13 A The question is, when are we making contact
14 with this point? Let's use photoelectric sensor.
15 We're determining contact at that point. Of course,
16 it's not going to contact it. You've got to have
17 something protecting the sensor and so forth, from the
18 environment and from where and so forth.
19 I think this is really a discussion of
20 semantics. I think Mr. Wilson, Dr. Wilson, whoever he
21 is, it's not touching it. But you're interested in
22 when you made contact with at that point. And this

1 sensor says, yes, making contact at that point. I
2 don't think even my students wouldn't argue that one.
3 Q In Muller's buffer 12, when the loop is
4 basically depleted, it's still touching, still
5 contacting the strip guide, right?
6 MR. HART: Object to form.
7 A So strip guide. Is strip guide 13? Is that
8 right?
9 Q That's right?
10 A Yes, I believe so.
11 Q And as the loop gets longer, it remains in
12 contact with the strip guide?
13 A Yes, I guess.
14 Q So what's changing is the degree of contact?
15 A What's -- yeah. And again, as I've already
16 said, what the contacting sensor says, is when am I
17 getting to contact a certain point on the strip guide.
18 That means my interleaf length is I've got my size of
19 piece of cheese there and I'm ready to go for the next
20 one.
21 Q I think it's been another hour. I don't know
22 if lunch is on the way.

1 MR. HART: It's here.
2 THE WITNESS: Oh.
3 MR. THOMAS: If you're up for a break, I am.
4 THE WITNESS: Sure.
5 THE REPORTER: We're off the record.
6 (Recess from 11:33 a.m. to 12:09 p.m.)
7 THE REPORTER: We're on the record.
8 Q (By Mr. Thomas) Welcome back.
9 A Thank you.
10 Q Hope you had a nice lunch.
11 A I did. I hope you had a nice lunch, too.
12 Q It was delightful. Thank you.
13 All right. Can you turn to paragraph 28 of
14 your report? And in this paragraph, you talk about the
15 dynamic needs of the cutting area. What did you mean
16 by that?
17 A So I think what I'm talking about there is
18 the fact that things are moving very quickly in the
19 cutting area, so you've got to be able to deploy the
20 interleaf as a pretty high frequency there.
21 Q Okay. So it's high-speed is one -- it's
22 moving quickly, like you said, yes?

1 A Yes.
2 Q Also, high acceleration?
3 A Yes.
4 Q And I think the next derivative is --
5 A Jerk.
6 Q Jerk. High jerk as well?
7 A Yes.
8 Q And we don't have to get into jouts
9 [phonetic], which might come back or might not.
10 Okay. So high jerk, high acceleration, and
11 high speed and those are the dynamic needs of the
12 cutting area.
13 A Yes.
14 Q Later on, you say the system has to maintain
15 tension over the loose loop; is that right?
16 A Yes.
17 Q And that gets at what we were addressing
18 earlier, is that there's a known issue that when you
19 are having those high dynamic needs, high accelerations
20 out of the loop, the paper might get pulled out a
21 little too far and tension my drop below optimal.
22 MR. HART: Object to form.

1 A Yes. I mean, a couple of things can happen
2 and they talk about it in the other patents as well.
3 You could actually go from tension to compression and
4 things could crumple up. The other thing, though, is
5 the tension could get too high and then you could tear
6 the paper and so forth.
7 Q (By Mr. Thomas) Okay. Go to paragraph 48.
8 And you see sort of in the middle of that page, you
9 talk about or you quote, I believe, from the Bryer 2024
10 reference, mechanically isolates mechanisms having
11 different acceleration and deceleration
12 characteristics?
13 A Yes.
14 Q So similarly, there's a -- there are
15 different dynamic needs on one side of the buffer from
16 the other?
17 A Yes.
18 Q And Bryer uses a tape transport system to
19 maintain a tension there?
20 A I'd have to go back and -- and take a look at
21 Bryer.
22 Q I think I brought that one.

1 A Great. I haven't thought about Bryer in a
2 long time.
3 (Examines a document.) Okay.
4 Q All right. So is that right? That Bryer
5 uses a vacuum as well to control tension in that loop?
6 A (Examines a document.) I think -- if it's
7 written there and I could go through this. I really
8 haven't thought about Bryer in a long time, but if it's
9 there in my report, I believe my report.
10 Q Do you see the Bryer has a vacuum system,
11 though, right?
12 A That's what it says in my report, yes.
13 Again, my focus here, this is the background and the
14 whole bit, focus is really on, you know, responding to
15 Mr. Jobin's report.
16 Q Got it. Do you recall if you reviewed the
17 Krohnert reference?
18 A Not off the top of my head.
19 Q I'll hand you over Krohnert --
20 A Okay.
21 Q -- which is in the '823 IPR was Exhibit 1017.
22 And I think looking at the front page of the abstract

1 in that picture, it should orient you. But Krohnert's
2 another example where there is a loose loop before a
3 cutter, right?
4 A I guess. I would really have to go back
5 and -- and take a look at that and my focus. Take a
6 look at this here.
7 (Examines a document.) Is the severing unit,
8 27.
9 Q Yes.
10 A And. . .
11 (Examines a document.) Yes, so we've got
12 a -- we've got a loop. Looks like a 15 before the --
13 before the cutter at 27. Looks like things are flowing
14 left to right.
15 Q So that cutting region would have -- that
16 would also have higher accelerations, higher jerk, than
17 the regions before?
18 MR. HART: Object to form. Lacks foundation.
19 A Yeah, I'd have to go through this. I don't
20 know -- I have to go through this one again to -- my
21 focus, once again, was really on responding to
22 Mr. Jobin's report.

1 Q (By Mr. Thomas) The abstract talks about
2 continuously and discontinuously operated regions with
3 a buffer region separating them?
4 A Yes, it does. It doesn't talk anything about
5 acceleration and so forth.
6 Q Discontinuous would imply acceleration,
7 starting and stopping, right?
8 A Sure. And whether that's a high degree of
9 acceleration or not, yeah. I mean, typically --
10 anyways. Yeah.
11 Q And then exiting the loop and I think this is
12 shown in figures 4 and figures 3 A, but there's a
13 vacuum break, 26?
14 MR. HART: Object to form.
15 A Yeah, again, you know, and we can go through
16 this. I'm not quite sure where you're going with this,
17 but certainly, I didn't focus on this. These are just
18 exemplars to talk about what's going on. The focus for
19 me is on this combination that Mr. Jobin put together.
20 Q Did you see in page 3, the bottom of the
21 paragraph 44, that breaking of the respective paper web
22 is realized at the same time by the generation of a

1 negative pressure?
2 A You could tell me what line it is. I'm sure
3 it's in there.
4 Q Three lines from the bottom of the first
5 column.
6 A Yeah, again, I don't understand how it has
7 anything to, you know, go back to the combinations that
8 Jobin put together, but it's in the patent, sure.
9 Q Sure. So this would be an example of a loop
10 before a cutting area, and then the paper is braked on
11 its way out of the loop by a vacuum.
12 A Again, I have to go through this. You know,
13 I -- I mean, you're reading different sections and so
14 forth. I have to go through this. I used this as,
15 look, here's different things that are out there.
16 My focus, again, is on these patents over
17 here. We can go through these but I'm not ready to
18 start opining on these types of things. It's not what
19 I was asked to do.
20 Q Yes, fair answer. Let's look at the DePoi in
21 paragraph 88 of your report next.
22 A Okay.

1 Q And you quote from DePoi that there's
2 inertial load and then you talk, from rapid start-stop
3 motion?
4 A Yes.
5 Q That would be acceleration-deceleration?
6 A Yes.
7 Q And high jerk as well, because it's rapid
8 starting and stop?
9 A Well, I don't know, right? Rapid start and
10 stop is high acceleration but, you know, it depends,
11 so, right? The derivative of acceleration is, you
12 know, it depends, right? If -- if -- so it depends.
13 But certainly, rapid start and stop, you do have high
14 acceleration or deceleration.
15 Q Okay. And in DePoi, as you say, This rapid
16 deceleration results in a high inertia load on the web?
17 That's in paragraph 89?
18 A (Examines a document.) Yes.
19 Q And then I think still, that paragraph with
20 the next page, DePoi has a brake 28 between -- between
21 the drive 30 and -- or withdrawn.
22 But you'd agree that DePoi has a brake 28 to

1 maintain sufficient web tension during this rapid
2 deceleration?
3 A Yes.
4 Q So DePoi is another reference, with a cutter,
5 a loop, and a vacuum brake.
6 MR. HART: Object to form.
7 A Again, DePoi -- I don't know. Let's see.
8 Does it have a. . . cutter? Well, they do show a
9 cutter. So that it feeds into and so forth. So it's
10 got a feeder, it's got a cutter and it's got a brake
11 that uses vacuum. All those are there.
12 Again, my issue is, you don't insert that in
13 the Muller. It just doesn't make sense, right? So
14 it's got all these components, it's great and it
15 doesn't make sense, economically, technically, but you
16 can put it forward. But I agree. It's great stuff.
17 Q (By Mr. Thomas) Muller has a cutter, right?
18 A Yeah. I want to -- you want to make sure, in
19 terms of interleaf cutter making the leaves, yes.
20 Q And paper is rapidly accelerated and
21 decelerated into that cutter?
22 A Yes. The cutter which occurs after the small

1 buffer 12.
2 Q And there's, yes, the small buffer is a loose
3 loop before the cutter?
4 A A very small loop.
5 MR. HART: Objection, form.
6 THE WITNESS: Sorry about that.
7 A It is a very small loop in there that's the
8 size of a leaf, an interleaf.
9 Q (By Mr. Thomas) Okay. But what Muller
10 doesn't disclose is any sort of vacuum brake after that
11 small loose loop and before the high
12 acceleration/deceleration of the cutter.
13 MR. HART: Object to form.
14 A One more time.
15 Q (By Mr. Thomas) What Muller does not
16 disclose is a vacuum brake after the small loose loop
17 but before the cutter.
18 MR. HART: Object to form.
19 A Right. They don't disclose that because they
20 don't need it, based on the design, and you wouldn't
21 put that in there, right? Nobody would think about
22 putting one in there.

1 Q (By Mr. Thomas) Okay. So to kind of go
2 through the ones we talked about. The folks who
3 designed Bryer thought it would be useful to put a
4 vacuum brake before the cutter and after the loose
5 loop.
6 The folks who designed DePoi thought it would
7 be useful to put a vacuum brake before the cutter and
8 after the loose loop. But your opinion, as a person of
9 skill, would look at Muller and conclude that it would
10 not benefit it the same way.
11 MR. HART: Object to form. Lacks foundation.
12 A You know, once again, I can't say, especially
13 with, what was the other one, the -- DePoi, we've --
14 you know, we've studied and so forth. It's a
15 completely different system. That system is what it
16 is. It's a separate system from Muller. You wouldn't
17 put that system into Muller.
18 I don't think anybody would put that system
19 into Muller, because Muller doesn't need that system.
20 You're just putting in something that's not needed and
21 doesn't fit and would cost a lot of money and would be
22 a pretty price to maintain, too.

1 Q (By Mr. Thomas) Pricey to maintain?
2 A Oh, yeah. You've got to throw in a vacuum
3 system and the whole bit. I mean, let's put it this
4 way: It is more price to you. Any anytime you move
5 more equipment in, more components in, anything like a
6 vacuum system, it's going to cost you more to maintain;
7 more parts to break down.
8 Q Can you look at page 37 of your report.
9 A Sure.
10 Q And is it an accurate statement of -- your
11 opinions that Muller's loop 12 has sufficient tension
12 control that it does not need a vacuum brake.
13 A Yes. I mean, Muller -- so there is not --
14 yes. It has actually sufficient control in terms of
15 just the size. It's one interleaf that's going along
16 and it doesn't need a vacuum brake in terms of moving
17 things along. You're just not going to see it crumple
18 up and so forth because you've got a big flow of
19 material going.
20 Q Did you run any tests or experiments to see
21 if when drawing paper from a loop like Muller's at high
22 accelerations into a cutting regions whether there

1 would be adverse tension effects?
2 A No, I don't really think you need to. You're
3 talking about a small piece of paper. So in terms of
4 adverse tension effects like from accel/decel, it's not
5 going to be there. It's the dynamics demonstrated.
6 Yeah, so, no, I didn't run any experiments.
7 And again, my job wasn't to run the
8 experiments. My job was to take a look at what
9 Mr. Jobin said and basically agree or disagree with his
10 recommendations.
11 And you know, he is putting systems in that
12 physically wouldn't fit in there that don't have the
13 support to put in there, and that would just be very
14 expensive.
15 In fact, it would have been useful if he had
16 run those experiments then I could have at least
17 disputed it. But he didn't do that, and I don't even
18 know how he puts them in there. So it would be great
19 to understand that.
20 Q I think just to be clear, I'm not at this
21 point asking about whether what's disclosed in DePoi
22 would fit or whether it would be expensive. But just

1 your basis for believing that at the acceleration
2 profiles used in Muller, a POSA would not expect to
3 experience any tension-related issues of either
4 overrun, out of loop, causing low tension. Or running
5 out of loop and causing a high tension. Your POSA
6 would just not expect that to happen.
7 MR. HART: Object to form.
8 A Again, if you look at it, the machine, the
9 machine runs properly and so forth. You know, it's
10 going to be fine. But my -- my job wasn't to take a
11 look at what the POSA would expect in terms of tension
12 or not and so forth. It's whether what Mr., you know,
13 Jobin states make sense and if it goes together, to
14 comment on his report.
15 So my focus is on his report, not whether the
16 tension levels are high enough and so forth. In fact,
17 I would expect the onus is on him to say, it would
18 actually improve it and here are the levels. But I
19 don't see any of that in his report.
20 Q (By Mr. Thomas) So regardless of what is or,
21 you know, may not be in Mr. Jobin's report, are you not
22 coming to the affirmative opinion that Muller's

1 apparatus teaches sufficient tension control?
2 A So number one is, I can't -- I don't like the
3 statement regardless of what Mr. Jobin said because
4 that was my job, is to review what Mr. Jobin said. So
5 I mean, that's -- that's my task, and that's what I've
6 done and that's where this report is about.
7 Q Okay. But -- for example, in paragraph 56,
8 you say, Mr. Jobin describes a situation in which the
9 loose loop is under too low of tension will tend to
10 "flop and flutter." And then you cite Mr. Jobin's
11 report?
12 A Right.
13 Q And then you say, Muller's small loop, on the
14 other hand, is not subject to the same issues. You
15 seem to be taking an opinion on whether Muller's loop,
16 as you understand it, would be subject to issues of
17 flop and flutter.
18 A Sure. That's fine. Yeah. I mean, something
19 the size of an interleaf, the size of a piece of
20 cheese, is just not going to flop and flutter.
21 Q And you didn't run any experiments to
22 determine what that size was.

1 A I didn't need to run those experiments.
2 Again, I go back to what Mr. Jobin said. Mr. Jobin is
3 putting in systems. He's saying, we need to insert
4 systems that are way bigger than a piece of paper
5 that's the size of a piece of cheese. So it's a
6 completely different approach and discussion, the whole
7 bit.
8 My comments aren't so much not to whether
9 this small piece of paper is going to have flutter and
10 so forth. He's putting in material because you've got
11 very long pieces of paper, if you will, very long
12 strips. And it just doesn't make sense, because here,
13 we're dealing with strips that are much shorter and the
14 system works just fine.
15 Q Okay. So you're disclaiming the sentence in
16 here where you say, Muller's small loop, on the other
17 hand, is not subject to these same issues. You're
18 saying that wasn't really your job to figure out.
19 MR. HART: Object to form.
20 A No, that's not what I said. I said that
21 Mr. Jobin is putting in these systems that have very
22 large pieces of paper, if you will. Very large strips.

1 That is not what Muller has in 12. These are very
2 small. That's my statement there. And those very
3 small strips are not subject to the same, what's the
4 terminology, flop and flutter that the, you know, that
5 the systems that Mr. Jobin wants to stick in there.
6 Q (By Mr. Thomas) Are they subject to any flop
7 and flutter?
8 A You know, it -- at that size, they're not
9 going to be flopping and fluttering. It's the size of
10 a piece of cheese. It's like a copy paper. You just
11 don't see a lot of flopping around in your copy
12 machines and so forth.
13 Q Copy machines aren't running at, you know,
14 tens of cycles a second, are they?
15 A Some of the high-speed ones do, in terms of
16 printing systems. Sure.
17 Q And no flopping and fluttering that needs to
18 be controlled in this.
19 A I think if you talk about small sheets, no,
20 the dynamics aren't there.
21 Q At what size does flopping and fluttering
22 stop being an issue, in this sort of situation we're

1 describing, with high accelerations and decelerations
2 out of the loop?
3 A So, again, I haven't analyzed that. I know
4 of the small sizes we're talking about, it's not going
5 to be an issue. At what size, I don't know. But
6 certainly, once you get to the size of the very large
7 systems that, again, wouldn't fit into that space on
8 Muller, you know, then you probably start running into
9 issues. You know, that's what they're talking about in
10 there.
11 But for the small -- for the small size of
12 that interleaf, single interleaf, you just don't have
13 that issue. That's why the machine is designed that
14 way.
15 Q You understand that Muller is not a machine,
16 right? It's a piece of paper with disclosures that a
17 person of skill might find useful?
18 MR. HART: Object to form.
19 A So Muller is a patent, yes. It's a concept.
20 But it's -- you know, it's been reviewed. Yes, we're
21 not looking at a machine here.
22 Q (By Mr. Thomas) Okay. And you believe that

1 a person looking at the disclosures of Muller would not
2 think that tension issues in its loop 12 could be
3 improved in any way by adding a brake at the outlet of
4 the loop to provide an additional tension.
5 MR. HART: Object to form.
6 So my statement is, by adding any of the
7 systems that Mr. Jobin has, like, the way it has
8 uprights, but those systems are big, larger loop
9 systems and so forth; no, they would not give you an
10 advantage in this particular case.
11 Q (By Mr. Thomas) Is the material in Muller's
12 loop 12 held at low tension or high tension?
13 MR. HART: Object to form.
14 A Could you be a little bit more clear on that?
15 Q (By Mr. Thomas) What do you require clarity
16 of?
17 A When you say, low tension, high tension.
18 Always? Sometimes?
19 Q Does the tension change during operation?
20 A Of course.
21 Q Okay. What is the range of tension that a
22 person of skill would expect to find in Muller's loop

1 12?
2 MR. HART: Object to form.
3 A Once again, I wasn't asked to answer that.
4 It's tension that's less than what's ripping the paper
5 and it's not going to be crumbling up. I couldn't
6 answer that. I wasn't asked to determine that.
7 Q (By Mr. Thomas) How were you able to
8 determine that the tension would be low enough that
9 it's not going to rip and high enough that it's not
10 going to crumple up?
11 A I mean, that is how the machine works. You
12 would not -- or how the system is described. If -- if
13 it doesn't work that way, then the system doesn't work.
14 So you have an assumption that here's a working system.
15 The Patent Office went through it, and said, okay, this
16 is a good system and we're good to go. It's a patent.
17 So there are some basic assumptions I made
18 there to say this is the system we're looking at. It's
19 the same thing that I think Mr. Jobin said we've got to
20 insert this in here because we can do all sorts of
21 things and help it out.
22 Q Do you have an understanding of whether the

1 grant of a patent -- actually, withdrawn.
2 Do you understand that that Muller reference
3 is not a granted patent?
4 A I don't know one way or the other. I just
5 know that Mr. Jobin uses this patent combined -- uses
6 the concepts in the patent, combined with other ones
7 and says, this is how we'd do it. And my job was to
8 opine on those combinations.
9 Q Do you believe that every patent application
10 published by the US Patent Office has a written
11 description that describes the enabled invention?
12 A I have no idea on that. That's something
13 that I have not thought about that I'm sure there's a
14 great legal answer to it, but I'm not a lawyer.
15 Q I mean, you're an engineer and a person of
16 skill. Do you think it's a fair assumption if
17 something is printed on a pad or document that a
18 machine built, you know, with sort of strict literalism
19 to the pictures and words of that patent, is it a safe
20 assumption that that machine would work?
21 MR. HART: Object to form. Lacks foundation.
22 Lacks relevance.

1 A Again, I haven't thought about it. It seems
2 more of a legal question. I do know, if I could reach
3 back in terms of what I remember in all the legal
4 stuff, is, look, the patent's got a disclosed
5 out-of-practice concept.
6 So if you can't do it, well, then, it doesn't
7 do anybody any good to disclose it, so you've got to
8 put that out there. But all the other information,
9 what the details are there, I don't know.
10 Q (By Mr. Thomas) Do you have an understanding
11 one way or the other as to whether prior art is prior
12 art for all that it teaches, even if it is not enabling
13 prior art?
14 MR. HART: Object to form.
15 A Once again, I'm not a lawyer. I was asked to
16 take a look at Mr. Jobin's report and the combinations
17 and just opine on those. So I'm not -- you know, I
18 don't really have a good answer there. I haven't
19 thought about it. Wasn't asked to opine on it.
20 Q (By Mr. Thomas) Okay. And instruction on
21 the law relevant to that question was not one of the
22 summaries of law that is included in your report,

1 right?
2 A I don't recall if -- if you'd like to point
3 it out, we could take a look at it. Really, my job was
4 to take a look at what Mr. Jobin said and to see if it
5 made sense. And it didn't make sense.
6 (Off the record.)
7 Q (By Mr. Thomas) So you were operating from
8 the assumption that what is disclosed in the Muller
9 reference would function without tension issues if
10 built according to the description in Muller.
11 MR. HART: Object to form.
12 A Again, I didn't assume anything one way or
13 the other. I am taking a look at what Mr. Jobin put
14 down and comment on or opined on combining these
15 different references in a sensical manner.
16 And again, as I've said multiple times and
17 I'll continue to say it, because it's important to be
18 clear on it, it just doesn't make sense to put these
19 together from a variety of different perspectives and
20 it doesn't help Muller's machine. It doesn't enhance
21 its performance.
22 Q (By Mr. Thomas) So when you told me earlier

1 that, that is how the machine works. You would not --
2 or the system is described. If it doesn't work that
3 way, then the system doesn't work, so you have an
4 assumption that here's a working system. When you told
5 me that, that wasn't you making an assumption that what
6 is disclosed in Muller is a working system?
7 MR. HART: Object to form.
8 A Boy. That was pretty bad English there.
9 I'll just clarify it.
10 Look, you know, I'm not assuming whether
11 these systems work or not. I'm assuming this is how --
12 I mean, this is how the systems work. I don't -- you
13 know, my job is to take a look at what Mr. Jobin said
14 and how he inserts it into these systems, and if it
15 makes sense or not.
16 If it works, you know, and I can tell you
17 that it is not an economical, not an engineering, it's
18 not a good solution across the board and a POSA just
19 would not do something like this. You don't need it,
20 either. Inserting any of these other systems into
21 Muller just does not make sense.
22 Somebody would not say, I don't know how much

1 it costs, but let's spend another hundred, thousand,
2 $5,000 trying to squeeze something into this little
3 space, which I don't think you can, and spend money to
4 improve it? No. It's not going to improve the system,
5 just add to the system.
6 Q (By Mr. Thomas) Do you disagree that Muller
7 has a specific teaching of that issues in particular,
8 of the interleaver strip are prevented at least
9 somewhat?
10 MR. HART: Object to form.
11 A I don't know. If you wanted to point me to
12 that, and I could take a look at it and say, yes, it's
13 there, or no, it's not.
14 Q (By Mr. Thomas) That's not something you
15 recall considering, though, when you formed your belief
16 that there are zero flopping and fluttering issues in a
17 system built to Muller's specification.
18 MR. HART: Object to form.
19 A Again, you've zeroed in on the flopping and
20 fluttering. The bottom line is, my job is to take a
21 look at what Jobin put down and whether it makes sense
22 and it does not make sense. This, the addition of

1 Jobin is not going to change anything in terms of
2 fluttering or flopping in the area depicted by 12, the
3 small loop.
4 Q (By Mr. Thomas) So a brake helps with
5 flopping and fluttering in DePoi, not in Muller?
6 A DePoi is a larger loop system. It's not a
7 small loop system.
8 Q And you can't tell me, sitting here, what
9 length that transition happens at, when it becomes a
10 large loop? When it becomes a small loop?
11 A I cannot. But I can tell you that it
12 wouldn't fit in there. That is not a large loop. That
13 is taken out -- the large loop aspect are taken out by
14 the dancer, serpentine dancer belt in Item 8, in
15 Muller.
16 So once again, what I can tell you is
17 sticking DePoi into 12 doesn't make sense. It's
18 expensive. It would cause a lot of operational issues
19 in terms of maintenance on the machine and a POSA would
20 not put it in there. They would not even recommend it.
21 Q Paragraph 56, you say that, The tension on
22 buffer 12 allows the material to move with ease.

1 Right?
2 A Yes.
3 Q Is that because it has a relatively low
4 tension or a relatively high tension?
5 A When you say a relative, you mean what?
6 Q I mean, so you wrote that sentence. What did
7 you mean by that, the tension on buffer 12 allows
8 the materials to move with ease?
9 A Well, the tension on buffer 12 would be the
10 relative tension that you'd need to move a small loop,
11 right, so it's going to be a pretty low tension.
12 Q Okay.
13 A You know, again, if you wanted to accelerate
14 it and so forth, maybe a higher tension, but it's not
15 going to be significant.
16 Q So that's your expert opinion, looking at
17 Muller's buffer 12, is that the paper in there is held
18 to a pretty low tension.
19 MR. HART: Object to form.
20 A Once again, I'm not, you know, my opinion
21 here is, you know, the same thing that -- look, it's
22 not going to tear it, so it's low enough tension that

1 it's not going to tear it. The critical opinion here
2 is you're not going to be replacing 12 with any of
3 these other patents or concepts because it doesn't make
4 sense.
5 Q (By Mr. Thomas) I mean, are you able to
6 compare the tension in Muller's buffer 12 to the
7 tension in a loop like DePoi's? One's higher? One's
8 lower?
9 A Again, I don't think I need to do that
10 comparison. My job was to take a look at what
11 Mr. Jobin had written down and to say whether it made
12 sense or not.
13 Q Do you think you could do that comparison?
14 A I am sure I could, given the time and the
15 information and the whole bit. But certainly not
16 today, not in the time we have left.
17 Q So you can't say one way or the other whether
18 the tension in Muller's buffer 12 would be relatively
19 higher or relatively lower than the tension in DePoi's
20 buffer.
21 MR. HART: Object to form.
22 A Again, I wasn't asked to do that. One thing

1 I can say is, these are both functioning systems and
2 the tension is going to be below the tear tension for
3 the strip of paper and that's the limiting issue there.
4 Q (By Mr. Thomas) They both have relatively
5 low tensions?
6 MR. HART: Object to form.
7 A Paper could be fairly strong, yes, but keep
8 it below the tension that is there. Again, I'm not
9 really looking at the relatively low or high tension or
10 so forth. It's what Mr. Jobin has written and what he
11 combined, and my job was to take a look at his report
12 and comment on his report.
13 Q (By Mr. Thomas) And then just to go through
14 the exercise, as compared Muller's buffer 12 to
15 Waffner's loop, can you say one way or the other
16 Muller's buffer 12 would be at a relatively higher or
17 relatively lower tension than Waffner's loop?
18 A Yeah, I don't have an opinion on that. I
19 wasn't asked to comment on that. Again, I was asked to
20 respond to Mr. Jobin's report in terms of -- in terms
21 of the combination of those two. And again, once
22 again, that combination just doesn't make sense,

1 economically, mechanically, and it doesn't add to
2 Muller's system at all in terms of performance.
3 Q So it's not your opinion that a small loop
4 would be at an inherently greater tension than a large
5 loop.
6 A I wasn't asked to opine on that. It's my
7 opinion that those systems don't go together, right?
8 That's the issue. I wasn't asked to opine on tension
9 levels, small loop, large loop, and so forth.
10 Q And knowing that you can't do it with perhaps
11 mathematical rigor, sitting here today, do you have a
12 sense of whether a small loop would be at an inherently
13 higher tension or lower tension than a larger loop?
14 A Yes, I haven't even thought about it, and I'm
15 not going to go in that direction. That was not what I
16 was supposed to be doing, so. . .
17 Q Okay. Are you aware that for a loop like the
18 loop in Muller, hanging under the force of gravity,
19 that that can be described what I think is called a
20 catenary equations?
21 A Yes.
22 Q You didn't attempt to model Muller's loop

1 using catenary equations?
2 A No, it wasn't necessary in reading, you know,
3 Mr. Jobin's report and so forth. You know, I didn't
4 have to use any catenary equations to understand that
5 you would not put those systems together.
6 Q Right. I don't know if I have it as an
7 exhibit for you. Maybe I do. Maybe I don't. But I
8 recall reading in one of the references that a -- when
9 a loop is held only under catenary tension, that is
10 typically a very low tension compared to a loop held
11 either under draw tension or dancer tension. Is that
12 something you agree with?
13 A Yes, I think especially when you use the term
14 "relatively." Yes.
15 Q So you didn't need to do any equations to
16 come to a conclusion that Muller's buffer 12 is held at
17 a relatively low tension.
18 MR. HART: Objection, form.
19 A You know, once again, I think that that's --
20 it's a very complicated question, because to say, it's
21 a catenary, but are we accelerating? I think we talked
22 about the fact that when we accelerate paper, we're

1 generating tension and so forth. So I don't think it's
2 a particularly good question that you can say yes or no
3 to.
4 And I'll just go back to the fact that I
5 really didn't take a look at what the tensions look
6 like. I went back to what Mr. Jobin wrote and, you
7 know, the fact that you just cannot put these -- well.
8 It doesn't make sense to put these together from a
9 variety of different reasons, including the fact it
10 just wouldn't enhance Muller's system to do so.
11 Q (By Mr. Thomas) Right. Because you don't
12 believe that there would be the low tension flops and
13 flutters or the high tension risk of tears in Muller's
14 system?
15 A Because I don't believe that the addition of
16 any of those systems, which are typically large loop
17 systems, make a lot of sense, you know, in the area of
18 12, which is a small loop system and has a very
19 different function. You just don't need that system in
20 there. It's not of use.
21 Q Take a look at paragraph 76 of your report.
22 The GEA438 references discloses a high

1 acceleration/high deceleration cutting zone, right?
2 A Yes.
3 Q And there's a more sluggish material spool on
4 the left?
5 A 11, yes.
6 Q Yes. And in GEA, there's a brake that
7 separates the -- and again, called a delay device that
8 separates the high dynamic cutting zone from the
9 sluggish spool, right?
10 A Yeah. Actually, if you wouldn't mind -- can
11 you dig that patent out? This is an okay figure, but I
12 think there's a nicer figure.
13 Q I'll hand that over to you once I pull it
14 out. And this was marked as Exhibit 1005 in the '823.
15 And I guess my question was, in GEA, there's
16 a brake that separates the high dynamic cutting zone
17 from the sluggish spool, right?
18 A Yes.
19 Q Paragraph 67 of your report, you write that
20 GEA lacks any loop at all. Is that right?
21 A Yes.
22 Q Okay. But GEA does have a vacuum brake,

1 right?
2 A Yes.
3 Q And that brake is designed to keep the
4 material at all times tensioned.
5 A Yes. That's correct.
6 Q Okay. So GEA has no loop at all. And still,
7 in your opinion, GEA has no loop at all, and still uses
8 a vacuum brake to impart a tension.
9 A And I still -- my opinion is still that you
10 wouldn't take this system, and I'm looking at figure 1,
11 but any of the figures in there, you wouldn't take that
12 system and insert it into 12 on the Muller patent. It
13 just doesn't make sense to put in there.
14 Q So DePoi is a big loop and it makes sense to
15 use a vacuum brake. GEA has no loop. Makes sense to
16 put in a vacuum brake. But your opinion is that
17 Muller, because it's in between -- it's not a big loop,
18 and it's a little loop. It's the perfect size that it
19 doesn't need a vacuum brake at all.
20 MR. HART: Object to form.
21 A That's not what I said, right?
22 Q (By Mr. Thomas) Explain it to me.

1 A I sure will. So what I said is you take
2 either, you know, DePoi or you take GEA and you stick
3 it into where 12 is. So first of all, the Muller
4 system accomplishes everything on its own that GEA or
5 DePoi have, so why would you put a redundant system in
6 there.
7 The next thing is they're both using vacuum
8 systems and you see this in the Muller system, so now
9 you've got to add a vacuum system. The next thing is,
10 you take a look at these systems and they're big.
11 They're not going to fit in the small loop area 12.
12 So you're going to have to refigure, redesign
13 the machine, make it bigger, if you can do if at all.
14 And I wasn't asked to do it. In fact it
15 would have been wonderful if Mr. Jobin would have said,
16 Here's how I would do it. But he doesn't even show us
17 how to do it. He just says, No, you can do it. And to
18 me, I don't see how this is the way to go.
19 Q Other than the, I guess, size difference of
20 the loop, that mesh's loop is bigger than no loop at
21 all. But you say, smaller than DePoi's loop. That's
22 what you're relying on to come to the conclusion that

1 all the tension control benefits that you see from
2 these vacuum brakes are redundant to what Muller
3 discloses.
4 MR. HART: Object to form.
5 A Once again, my statement here is, Mr. Jobin
6 is saying, put these in there, in location 12, to
7 replace location 12. And what I'm saying is, you don't
8 need it there. It's not necessary. It's already taken
9 care of. These are really big systems. They don't fit
10 in there. You need to put in pneumatic systems or
11 packing systems in there to try to make these work.
12 And frankly speaking, it just doesn't make sense.
13 And once again, it would have been great if
14 Mr. Jobin said, Here's why you put them in there,
15 because we've got this lacking. Or here's what we need
16 to do to fit this in there. But he doesn't give us any
17 idea. He just says, This can go in there.
18 Q (By Mr. Thomas) You say the issue of tension
19 in the loop is already taken care of in Muller. What's
20 taking care of it?
21 A The -- I mean, it's the -- the -- in terms of
22 the small loop, it's addressed by having the small loop

1 in there. And the small loop is the size of an
2 interleaf. And the interleaf, that size is measured by
3 the contact sensor.
4 Q Right. So at the root of it, your opinion
5 is, you have determined that that loop is, because of
6 the size that you believe it to be, already taken care
7 of these tension issues.
8 A So in my opinion, the root of it is that
9 Mr. Jobin is recommending combinations that don't make
10 sense. That don't -- that don't address -- they don't
11 fit into this area 12 for the small loop, which is
12 already working just fine, and he's sticking in larger
13 loop type of systems into this area.
14 And he's not telling us how to do it or how
15 one would move forward with it. And he's recommending
16 things that just don't make sense. That's my opinion.
17 And that's what I was asked to opine upon.
18 Q And I think that the particular part of that
19 answer that I'm interested in is when you say, Muller's
20 is working just fine. What did you do to reach that
21 opinion?
22 A So Muller takes care of -- of the large loop,

1 the small loop, and again, I am looking at this and
2 saying, Mr. Jobin is inserting. He's inserting these
3 larger systems into the smaller loop, and I was asked
4 to opine on that. And he doesn't make sense. It
5 doesn't make sense to replace it. You know. That was
6 my -- that was my job.
7 Q How is Muller taking care of its small loop?
8 A I don't understand the --
9 MR. HART: Object to form.
10 A I don't understand the question.
11 Q (By Mr. Thomas) You say that Muller takes
12 care of the small loop. You say that, you know,
13 Muller's is working just fine. You say Muller, you
14 know, is working, and wouldn't be improved with a
15 brake.
16 What is your basis of saying Muller is
17 working just fine?
18 A I think that's not the right question. The
19 real question is, what is the improvement that comes
20 through by inserting these other systems? You know,
21 how are these systems improving Muller, and they don't.
22 They don't address anything that, you know, that isn't

1 already addressed in terms of the large loop, small
2 loop system. And Mr. Jobin hasn't said anything about
3 it.
4 My job was to say, well, is -- you know, what
5 has he done here? Has he given us how to do it? Why
6 it makes sense and the whole bit. And he hasn't
7 convinced me there. He hasn't said how it takes care
8 of 12. Why would you put it in there? I was asked to
9 opine about what he said. And he didn't give me the
10 information. He didn't tell me how to do it.
11 Q Okay. Can you look at paragraph 31 of your
12 report?
13 And then you used the terms in paragraph 31,
14 and this is the second page of it, but a coarse level
15 of control and a finer level of control.
16 A Yes.
17 Q Those aren't terms from Muller, right?
18 A No. I don't believe so.
19 Q So it's more of a scare quotes around
20 "coarse" there? It's you not actually quoting from
21 Muller that it describes it as a coarse level?
22 A Yes, I think so. We can go back and take a

1 look. You've got 8 which is the coarse level that
2 deals with the big roll that's going along and then you
3 have 12 which is dealing with a very small lever on the
4 size of an interleaf.
5 Q So what's your definition? How are you using
6 these phrases, "coarse level" and "finer level"?
7 A So the finer level would be the size of an
8 interleaf. Right around there. Interleaf or two. And
9 then the coarse level would be sort of be bigger than
10 that.
11 Q So it's just a size thing? Coarse and fine?
12 Big and small?
13 A It's the, yeah, sort of the length of the
14 strip, if you will. Size of the loop; small loop,
15 large loop. Same type of thing.
16 Q Buffer 8 in Muller, it's not subject on
17 either end to sort of a high acceleration/high
18 deceleration movement profile, right?
19 A I mean, normally, no. That's why I have
20 buffer 8 in there.
21 Q Right. So buffer 8 is, it's isolated from
22 the cutting area.

1 A Yes.
2 Q And the buffer 12, is in turn, isolated from
3 buffer 8. In terms of tension.
4 A Yes, well, that would be -- yes, that's the
5 idea.
6 Q So I guess, and I think in figure 1, either
7 in your report or in Muller, there's sort of one zone
8 of tension leaving the spool and going to drive 6?
9 A Yes.
10 Q Then there would be a second zone of tension
11 which is buffer 8 that's held under tension by, you
12 know, festoons or a series of dancers, right?
13 A Yes.
14 Q And that is -- that goes up to drive 11,
15 between drive 6 and drive 11, buffer 8?
16 A Yes.
17 Q And then beginning at drive 11 and going
18 through drive 15, that is a third tension zone, and
19 which include buffer 12, right?
20 A Yes.
21 Q And it's that third tension zone that is
22 subject to the high acceleration/high deceleration, at

1 drive 14.
2 A Yes. The start and stop.
3 Q And it's the first tension zone, so between
4 the spools and drive 6, that's known as what's subject
5 to the sluggishness and high inertia of the rolls,
6 right?
7 A Of the rolls, yes, whatever they are. Number
8 3, I think -- 2. I see. There's 2. Yeah.
9 Q Okay. So it's three zones to isolate those
10 specific issues.
11 A Well, you have two buffers. One side of the
12 first buffer then between the two buffers and then to
13 the left and this figure of the second buffer. So
14 you've got your three zones.
15 Q Okay. Can you look at paragraph 58 of your
16 report?
17 Actually, before you do that. You can read
18 through your report at your leisure, of course. I was
19 going to try and write down what we had just discussed.
20 You can keep going.
21 A Shall I go to 58?
22 Q If you want to, but no need at the moment. I

1 was going to keep talking about the figure 1.
2 A Okay.
3 Q And if you could take your own copy of
4 Muller. Have you got a pen or something to write with?
5 A Yes.
6 Q Black pen?
7 A Yes.
8 Q Could you draw sort of curly brackets around
9 these three tension zones we just discussed?
10 A (Complies.)
11 Q Okay. And so just to confirm that you have
12 what I've expected, zone 1 is between the top of the
13 spool and drive section, right?
14 A Yes.
15 Q And zone 2 is between drive 6 and drive 11?
16 A God, where did I put it? Yeah. I -- I did
17 not have between 6 and 11 because, you've got various
18 tension happening as the dancer is moving around. But,
19 yeah, I mean, that's fine by me. We can put it in
20 there as well.
21 Q Yes, so the tension might not be constant
22 through that, but it's not isolated.

1 A Right.
2 Q It's treated as a zone.
3 A Right.
4 Q And the final zone would start at drive 11
5 and go up to drive 14, right?
6 A Yeah. So that's fine. We're going through
7 the small loop buffer in there, too. 15, yes.
8 Q Okay. Those are the three isolated zones in
9 this machine.
10 A Right.
11 Q If you could take a look at paragraph 58.
12 And you write toward the middle of that paragraph,
13 Muller explains its -- sorry.
14 A This. . .
15 Q Page 38, which is paragraph 58?
16 A Okay. Yes. This kind of goes there -- all
17 right. We're over here. Good.
18 Q Muller explains its interleaf reel is braked
19 automatically as soon as there is no need for the
20 interleaver strip. For example, when a product change
21 is taking place in the cutting device, you cite Muller
22 and you say, More specifically, Muller avoids the need

1 for braking on the ascending portion of the loop by
2 including, deliberately, so much friction that in the
3 event of a consumption stop or a reduction in
4 consumption of the interleaver strip, the reel overruns
5 only so slightly. Did you see all that?
6 A Yes.
7 Q So fair to characterize this as you're
8 pointing to a disclosure in the Muller reference as
9 some sort of brake.
10 MR. HART: Object to form.
11 A I think what I'm pointing on -- you know, in
12 that, it's got friction, right, so there's enough
13 friction. So there's no active braking. You've just
14 got friction so there's rubbing. If you want to call
15 that breaking, that's you know, yeah.
16 Q (By Mr. Thomas) And shockingly, I don't want
17 to fight you on semantics here. You're describing
18 friction at the spools, right?
19 A Yes.
20 Q So could you draw an arrow to where in the
21 Muller system this sort of friction phenomenon you're
22 describing in figure 8, where that is acting on.

1 A Let's see. I'll have to take a look over
2 here to make sure we get it right.
3 Q Of course.
4 A (Examines a document.) Okay. Now I've got
5 to go find -- he talks about the interleaver reel?
6 Q Reference number 1, I believe, is the helpful
7 list of designations at the bottom of page 4.
8 A Okay. So when they're talking about friction
9 to the interleaver reel, that would be the friction on
10 this reel over here (indicating).
11 Q Can you draw an arrow pointing to that and
12 label it paragraph 58, Friction?
13 A (Complies.)
14 Q Thanks. And so you agree that the friction
15 you're describing in paragraph 58 is --
16 A I believe so. Yeah. That's the interleaver
17 reel, and that's number 1. We're pretty good there.
18 Q Excellent. If you look at paragraph --
19 actually, now is a fine time for a break if you want to
20 take one or we could keep going. It's up to you.
21 MR. HART: Yeah, a break's good.
22 THE WITNESS: Okay.

1 THE REPORTER: We're off the record.
2 (Recess 1:13 p.m. to 1:20 p.m.)
3 THE REPORTER: We're on the record.
4 Q (By Mr. Thomas) Could you take a look at
5 paragraph 28 of your report?
6 A Okay.
7 Q Did you do any analysis on how large of a
8 loop is disclosed in the patents?
9 MR. HART: Object to form.
10 A As I said before, my job was to take a look
11 at Mr. Jobin's report and comment or opine on the
12 combinations that he put forward. So, no, I didn't do
13 any analysis there. I wasn't asked to do any analysis
14 there.
15 Q (By Mr. Thomas) And do you know whether the
16 patent claims require a loop of a particular size?
17 A Once again, I didn't look at that, so I don't
18 know off the top of my head.
19 Q What about paragraph 35, if you could take a
20 look that.
21 A Uh-huh.
22 Q I think this is something you've been

1 referring back to all day. But it's your opinion that
2 Muller's buffer 12 comprises substantially less
3 material than the amount in buffer 8; is that right?
4 A Yes, I believe so.
5 Q Does Muller state that buffer 12 has to be
6 substantially smaller? Or is that just a preference?
7 MR. HART: Object to form.
8 A I -- I don't know. I'd have to go back and
9 take a look at it. But normally, the way it's drawn,
10 it's a much smaller loop than 8. And again, I think
11 the key thing here, is not so much which one is bigger
12 and smaller and so forth, but where Mr. Jobin is
13 inserting these large-loop systems into the small loop
14 element of Muller into that small space. You know, I
15 think that that's the key point here, not the
16 difference, the size, between 12 and 8.
17 Q (By Mr. Thomas) Okay. So you based your
18 understanding of the size of buffer 12 on what's shown
19 in that picture?
20 MR. HART: Object to form.
21 A I didn't base my size, my estimation of the
22 size of buffer 12. It's the small loop buffer, so it's

1 going to be smaller. And in a small loop, we're
2 looking at something the size of an interleaf, which is
3 the size of a piece of cheese. So that's sort of what
4 we're looking at, which, again, is substantially
5 smaller than any of the systems that Mr. Jobin wants to
6 insert in there.
7 Q (By Mr. Thomas) On looking at, staying with
8 Muller, but the bottom of page 3, last line and on to
9 the top of page 4, first line.
10 A Hang on, two seconds.
11 Q Yes.
12 A Bottom of 3. Okay.
13 Q Provided downstream of the first buffer 8 is
14 a further buffer 12, a loop here, which preferably has
15 a substantially lower capacity than the buffer 8 and
16 preferably buffers only as much interleaver material as
17 is needed for the injection of an interleaver. Is that
18 right?
19 A Yes, that is correct.
20 Q So that sentence uses preferably twice,
21 right?
22 A Yes, I believe so.

1 Q So Muller expresses a preference that buffer
2 12 is substantially lower capacity than buffer 8 and a
3 preference that buffer 12 buffers only as much
4 interleaver material as is needed, right?
5 A As is needed for an interleaf, right?
6 Q You agree with that?
7 A I would say 12 is of that size, yes.
8 Q And that's the stated preference in Muller.
9 A Yes. And that that's the stated preference
10 in Muller, and again, we're -- I'm not super-concerned
11 about sort of the preferences of 8 and 12 and so forth.
12 But the fact that we're going to stick in the
13 DePoi or Waffner or so forth in 12, which as they say,
14 is about the size of an interleaf.
15 Q Preferably about the size.
16 A Preferably about the size of an interleaf.
17 Q There's no teaching in Muller that buffer 12
18 cannot be larger, correct?
19 A Again, if you're looking at -- I mean,
20 normally, they talk about a small loop. So if you're
21 looking at it and you want to talk about the figure
22 being somewhat accurate, your large loop is going to be

1 8. Your small loop is going to be 12. 12 is going to
2 be significantly smaller than 8.
3 And some of these systems, in fact, these
4 systems, DePoi, Waffner, and so forth, they are
5 replacing -- excuse me, large loop, and so they are
6 going to be big.
7 And I think any POSA looking at this, looking
8 at large versus small, is going to say, yes, it's going
9 to be significantly smaller and those systems are going
10 to have a very hard time fitting in that small area.
11 Q Unpacking that a little bit.
12 A Sure.
13 Q I think you said Muller is nominally
14 referring to a small buffer. Do you recall just saying
15 something along those lines?
16 A Something along those lines, yes, in terms of
17 12 being a smaller buffer.
18 Q Is it your opinion that Muller describes
19 buffer 12 as a small buffer?
20 A So it's described, you talk about enough for
21 an interleaf, right? So this is going to be smaller.
22 The other with an dancer and so forth is going to be

1 much bigger if you take a look at it with their
2 function and the whole bit. I don't know how anybody
3 would turn around and say, Oh, no, no, one is the same
4 size, or one is smaller or bigger. My interpretation
5 in the figures is that they're somewhat to scale.
6 Q Do you know if that's legally supportable in
7 patent law that these figures are drawn to scale?
8 MR. HART: Objection. Form and foundation.
9 A Again, I think if a POSA would look at this
10 and say, yes, of course, this is going to be smaller.
11 And if you just take a look at -- I mean, for example,
12 I would look at the roll in -- this is Waffner, right,
13 the roll in Waffner, the roll in Muller, you know. Are
14 they the same size?
15 Well, at least their width, you would say
16 there's the width, which is the width of a piece of
17 cheese, so it looks like they're about the same size.
18 And so I would say that that roll is about the same
19 size as 8 and it's much smaller than 12.
20 So I think looking at these things is,
21 there's an indication there. But again, you know, it
22 gets back to what Mr. Jobin wrote, and he said, hey,

1 we're going to put these into the small buffer, in
2 the -- would you say in buffer 12? We don't have to
3 say small buffer 12.
4 It doesn't make sense to put this big roll
5 system in there. You've already got the roll here with
6 the high-capacity, you know, dancer in 8. So it just
7 doesn't make sense.
8 Q (By Mr. Thomas) Some of your analysis
9 depends on assuming that the figures in the patent are
10 drawn to scale.
11 A Well, and that they're -- I mean, some of
12 the -- so the answer is no. My analysis was to go
13 to -- I mean, what I just talked about, yes, drawn to
14 scale. What I was asked to do was to see what
15 Mr. Jobin said and to agree or disagree with it.
16 And I think what Mr. Jobin said doesn't make
17 sense. He doesn't show us how he would do it. You
18 have to put a systems in there, your vacuum system and
19 so forth in there, and a POSA just wouldn't do this.
20 Q Okay. The bottom of page 4, there's a list
21 of designations on Muller.
22 A Which, 4 of? Muller?

1 Q Yes.
2 A Thank you. Column. . .
3 Q It's at the very bottom of page 4, the
4 right-hand column.
5 A I'm sorry. Which. . .
6 Q So list of designations --
7 A Oh, column 4. I'm sorry. I'm getting --
8 those are page numbers. I'm sorry. I was thinking
9 columns. My apologies. Yes.
10 Q And in this list of designations, feature 8
11 is called the buffer, right?
12 A Feature 8 is called the buffer, yes.
13 Q Feature 12 is called the buffer kind of loop?
14 A Yes.
15 Q It's not called the small buffer?
16 A It's called the buffer loop and that is where
17 Mr. Jobin was saying he was going to put these other
18 large systems in there, correct.
19 Q And under that one sentence at the top of
20 page 4, that's preferably, that buffer 12 is smaller
21 than buffer 8. So there's a preference for a smaller
22 buffer.

1 MR. HART: Objection. Form.
2 A Again, it's going to be smaller than buffer
3 8. Buffer 8 is -- is, you know, deals with the large
4 inertia in there, just by the physics and definition.
5 But I'm not really here to talk about all these
6 different designs. What I'm talking about here is what
7 Mr. Tobin -- Jobin has put forward, it doesn't make
8 sense in the 12 area.
9 But clearly, because you're dealing with the
10 high inertia rollers and stuff, 8 is going to be bigger
11 than 12.
12 Q (By Mr. Thomas) Does Muller say anywhere
13 that making buffer 12 larger would be incompatible with
14 the nature of Muller's design?
15 A Once again, Muller doesn't say it, but it's
16 specifically designed to deal with pieces of paper the
17 size of an interleaf. So it doesn't make a whole lot
18 of sense to make it bigger unless you're trying to
19 insert one of these systems that Mr. Jobin says he
20 wants to insert, which, again, doesn't make a lot of
21 sense.
22 And again, I'll point out, I wish he had

1 shown us how to do it, because it would have given us a
2 little bit more to talk about today.
3 Q So also the top of page 4.
4 A Yes.
5 Q Muller describes that its preference is for
6 buffer 12 to buffer only as much interleaver as needed
7 for the injection of an interleaver. Is that right?
8 A I'm sure it is.
9 (Examines an exhibit.) Where is that over
10 here? Let me put my glasses on. I'm sorry. I do not
11 doubt that you're correct on that.
12 Q Right after the bold numeral 8 on the next
13 line?
14 A There we go. Yes.
15 Q And you understand that to mean that in
16 this -- in this embodiment, buffer 12, the amount of
17 paper in that buffer would be basically exactly equal
18 to the length of your piece of cheese interleaf.
19 A Yes. About. Sometimes they're bigger or
20 smaller when you open up a pack of cheese and the paper
21 is sticking out.
22 Q Right.

1 A But roughly the same size.
2 Q But if the interleaf is 3 inches, then there
3 would be 3 inches of material in the loop.
4 A Yes.
5 Q Okay. Wouldn't that result in the material
6 being drawn taut when the paper is fed? Like, the
7 buffer would be completely empty?
8 A Oh. So -- you know, so if you say exactly, I
9 would say that there's probably tolerance on it, from
10 exact down to, you know, instead of plus or minus this
11 distance, it's probably this distance plus some.
12 Q Okay. You didn't do any calculations as to
13 what that tolerance would be?
14 A No. I mean, the contacting sensor would be
15 set up such that you have the right amount of material
16 every time. So, in one instance, you would be a little
17 bit too much and then index some more and give you the
18 right amount every time.
19 Q Got it.
20 A Roughly speaking, within the spec tolerance.
21 Q Do any of the proposed patent claims of
22 Muller claim a loop of a certain size?

1 A I don't know. I actually, I -- I don't know
2 that I went through the proposed patent claims. I
3 basically looked at Mr. Jobin's report and looked at
4 what he wrote about integrating the different concepts
5 together. And just opined on if it made sense and if
6 he gave us enough information to do that integration,
7 which I think we've said, he did not.
8 Q You've said that.
9 A I know.
10 Q Muller doesn't describe its invention as
11 being a small buffer loop, right?
12 A I don't know.
13 Q Do you -- withdrawn.
14 Would you look at paragraph 42.
15 MR. HART: In the declaration or Muller?
16 MR. THOMAS: Great clarification.
17 Q (By Mr. Thomas) Could you look at paragraph
18 42 of your declaration, particularly the portion that
19 leads on to page 26.
20 A (Examines a document.) Yes.
21 Q And you write -- you're talking about
22 eliminating the need to modify buffer 12?

1 A Yes. I think this goes to Mr. Jobin's point
2 of inserting pressure sensors and things like that from
3 some of the other patents in there.
4 Q So you agree, at least, though, that it would
5 be at least possible to modify buffer 12. A person of
6 skill could do that.
7 MR. HART: Object to form.
8 A So if you have the budget to do it, if you
9 could expand out, it's not clear -- in fact, it's
10 pretty clear that the systems they're talking about in
11 Waffner or DePoi and so forth are not going to fit into
12 that small little area. So you'd have to be able to
13 expand that area out.
14 But I mean, mechanically, I think it could be
15 done. And once again, it would be great to know how,
16 you know, if -- you know, Mr. Jobin had an idea how to
17 do it in that small little space and insert vacuum
18 components and the whole bit, it would have been very
19 useful to hear that from him.
20 Q (By Mr. Thomas) You don't know what, if any,
21 maximum size Muller's buffer 12 could be at which point
22 it would stop functioning, do you?

1 MR. HART: Object to form.
2 A No, once again, I wasn't asked to take a look
3 at that. I was asked to see if these different systems
4 would fit in there and make sense. And they don't, if
5 Mr. Jobin provided us with a means to do that.
6 Q (By Mr. Thomas) You didn't analyze whether
7 Muller would be operable if buffer 12 was sort of
8 longer than your assumption of what buffer 12 is?
9 MR. HART: Object to form.
10 A No, I mean, I would have analyzed it if, you
11 know, Mr. Jobin would have said, here's how we put it
12 in there and here's how to modify buffer 12. But there
13 was no basis for me to do that analysis.
14 Q (By Mr. Thomas) How long is the strip guide
15 in Muller?
16 A So the. . .
17 Q Yes. As you see it, how long is that strip
18 guide, length-wise?
19 A Drawn on -- this is strip guide 13? Is that
20 right?
21 Q It is, yes.
22 A You know, it's roughly the size of a piece of

1 cheese, right? So an interleaf, roughly speaking.
2 Q So how many inches?
3 A I -- I don't know. I guess it depends on how
4 big of a piece of cheese you're going to cut. You
5 know, I don't know. I wouldn't -- again, I wasn't
6 really asked to opine on the size of that thing.
7 But again, we know what the block of cheese
8 or a stack of cheese that you buy in a store and so
9 it's roughly on that scale. But in inches, I don't
10 know. I haven't gone -- I should have maybe gone to
11 the store and taken a ruler out and measured some
12 cheese before I came here.
13 But in all reality, it's about that size. My
14 thinking here is, again, Mr. Jobin said, we can stick
15 these big enormous vacuum systems in here, and
16 certainly, they're not going to fit in there, whether
17 they're 6 inches, 9 inches, or 4 inches, right?
18 Q Do you think that Mr. Jobin ever referred to
19 the system as "big enormous vacuum systems"?
20 A No. I don't think so. Because if he did, he
21 would not have written -- he wouldn't have put down
22 this recommendation.

1 Q That's your gloss on his --
2 A It is. Yes. That's fair enough. That's
3 fair enough. We can put that in italics, yes.
4 Q Is it possible that the strip guide in
5 Muller's buffer 12 is a foot long?
6 A I just don't know. I haven't been asked to
7 think about it and so forth. Yeah, I couldn't tell
8 you. Foot, 11 inches, 11 and a half, 12 and a half
9 inches. I just don't have a good feel for that.
10 Q 10 feet long?
11 A I don't think -- I don't think 10 feet long.
12 Q 1 inch long?
13 A We could venture on numbers all day, but
14 really, I wasn't asked to take a look at the size. I
15 was asked to take a look at what Mr. Jobin said, and,
16 you know, what he said just doesn't make sense.
17 Q But order of magnitude, you think less than
18 10 feet.
19 A I would say --
20 MR. HART: Object to form.
21 A -- less than 10 feet, sure.
22 THE WITNESS: Sorry about that.

1 Q (By Mr. Thomas) How much space does an edge
2 take up?
3 MR. HART: Object to form.
4 A I don't quite understand the question.
5 Q (By Mr. Thomas) Sure. Can you look at
6 paragraph 39?
7 A Okay.
8 Q Page 22 of your report. And I think one of
9 the things you're talking about in paragraph 39 is the
10 longitudinal edges that are a part of Waffner's
11 teaching.
12 A (Examines a document.) Okay.
13 Q And so how much space does the longitudinal
14 edge require?
15 MR. HART: Object to form.
16 A (Examines a document.) So. . . so I think
17 there are a couple of things we look at here. If you
18 look at Waffner, figure 1. We've got this longitudinal
19 edge that this is the surface, I guess it would be, 8.
20 And there's sort of 8 and 6 and so forth. This big
21 long surface here that is going vertically. And so
22 that -- I don't know. I really don't have a good

1 estimate there.
2 If we take a look at 5, that's our interleaf.
3 And you see the width there. So it's multiple widths
4 of an interleaf long. You've got 8 -- what is 8 -- 8
5 is -- 9 is the fan. I know that. But let's get down
6 to. . .
7 (Examines a document.)
8 Q (By Mr. Thomas) And I guess to clarify, I
9 think your paragraph 39 was talking about Waffner, and
10 you have GEA --
11 A Do I have GEA? I'm sorry. Thank you very
12 much. Thank you.
13 So -- so here, you know, in terms of edge and
14 space and so forth, I mean, you've got. . .
15 (Examines a document.) Yes. So again, to
16 your point, the figures are to scale and so forth, but
17 you've got the width of the interleaver going over the
18 pressure sensor and so forth. So that's, you know,
19 height-wise, probably 2, 3, interleaver widths.
20 But if you look at -- if you look at -- then
21 the cross-section figure 1, you've got the roller
22 system driven by motor 39; another motor system driven

1 by motor 38. You've got the loop in there. That's, as
2 you correctly pointed out is going to be a catenary.
3 So there's a length issue. So top to bottom.
4 And there's also a width issue in there. So it's going
5 to take a fair amount of space. And then you're going
6 to have to bring in all of the connections for the
7 vacuum and so forth to drive this, and then actually,
8 integrate it back into -- well, they don't show you
9 integrating it back into, I guess, the dancer would be
10 farther to the left.
11 So it sort of depends on if you're really
12 talking about taking this whole system here, which I
13 think you probably are, and squeezing down into 12.
14 Q So I think maybe getting away from the
15 specific chamber in Waffner, but generally speaking, a
16 vacuum chamber with longitudinal edges, do you know if
17 there's a minimum size for that?
18 MR. HART: Object to form. Lacks foundation.
19 A You know, certainly, there's going to have to
20 be some minimum. I don't know what it is, but I wasn't
21 asked to opine on the minimum. In fact, it would have
22 been very useful if, you know, Mr. Jobin would have

1 said, yes, this will all fit in here because I can put
2 this little vacuum chamber in there, et cetera,
3 et cetera, et cetera.
4 But I don't think it's going to fit in there.
5 I could give you an opinion on it, but he hasn't told
6 me how he's going to do this. Just put it in.
7 Q (By Mr. Thomas) Do you think a vacuum
8 chamber could be designed to be less than 1 inch
9 tall?
10 A Tall. Well, I think with a vacuum chamber
11 the key thing is going to be volume not just height.
12 Q Do you think a vacuum chamber could be
13 designed to be less than 1 inch cubed?
14 A It depends on, you know, your vacuum
15 specifications and how big your holes are and things
16 like that, and what you're trying to do with it.
17 Again, I -- I was not asked to give an
18 instruction, but I'm thinking about this and if you
19 want to use this in terms of controlling and breaking
20 and so forth, you've going to have to have holes of
21 enough size to create suction in there.
22 And you're going to have to have enough

1 volume so when the holes open up, you know, or they're
2 clogged up, you know, that you can change that pressure
3 pretty rapidly given the fan system that you have.
4 Q You're not able to put a number, though, in
5 terms of inches on what that minimum size would be.
6 A My hope would be, again, that Mr. Jobin could
7 have done that so I could have agreed or disagreed with
8 him, but I didn't see that at all. I was only asked to
9 opine on what he recommended.
10 Q So that's a no. You can't put a size --
11 A I wasn't asked to do that. I was asked to
12 look at what he recommended. He didn't put a
13 recommendation on there, so I can't do that analysis.
14 Q You mentioned the longitudinal edges of a
15 vacuum box. Would the length of the latitudinal edges
16 matter in whether the vacuum box could fit in the
17 buffer 12 space?
18 A I think it gets back to, you're talking about
19 volume, so I think there would be a fair amount of work
20 you'd have to do, which appreciated, you know, that I
21 could take a look at. But the reality is, it's going
22 to go back to the volume and so forth.

1 I think you have to be careful not only to
2 talk about just the box, but okay, how are you going to
3 connect it? What about the holes? What about the
4 guides that sort of keep the paper along this thing.
5 So there are a lot of things you have to take into
6 consideration.
7 Q Okay. So going back to your comment about
8 the volume. Volume is a variable there. If you
9 increase the volume, that's, all else equal, what is
10 going to increase the braking effect and if you
11 decrease the volume, decrease the braking effect?
12 A No, I don't think so.
13 Q Does the volume have any impact on braking
14 effect?
15 A So the volume is going to give you what one
16 might call a fluid capacitance, right? If you had a
17 volume the size of this room, you know, you'd still
18 drill those little holes there and still have a braking
19 effect as a volume half size of this room.
20 But if you have something the size of a soda
21 can and you took the paper off the holes, well, that
22 vacuum would go away much faster than if we had to

1 vacuum the size of this room.
2 Q Okay. So in terms of the braking effect to
3 the variables that matter, are the size, the number of
4 holes, and the strength of the suction.
5 A Yeah, I would say the pressure differential,
6 but sure.
7 Q And increasing the pressure differential
8 decreases the force, all else being equal?
9 A Yes, I would think so.
10 Q Increasing the area that is holes --
11 A Making holes bigger.
12 Q Making the holes bigger?
13 A There you go.
14 Q Makes the braking stronger?
15 A Yes. Nominally. You can only make them so
16 big before you suck paper. These are the things that I
17 would hope that Mr. Jobin would have put forth to say,
18 here's how you do it.
19 Q You don't think his analysis should have left
20 setting those variables up to the POSA?
21 A I would've loved to have seen some analysis.
22 So, I mean, yeah. I would have just -- I mean, I don't

1 think this is analysis. It's there's not much analysis
2 there. Just, we'll put these things together.
3 Q And in terms of the ability to detect
4 pressure changes. What are the variables that impact
5 the magnitude of pressure change?
6 A I'm not quite sure I understand that one.
7 That question. Excuse me.
8 Q So is that where the volume of the chamber
9 comes into play, that a smaller chamber will more
10 rapidly respond to or more rapidly have a measurable
11 pressure change where the holes are plugged?
12 A Yes. Yes.
13 Q Okay. And all else equal, a larger chamber
14 would have a less detectable or less rapidly detectable
15 pressure changes when the holes are plugged.
16 A Yes.
17 Q Okay. Any other variables that impact --
18 A I don't know. I mean, they're lots. Your
19 motor size and, you know, the whole bit in terms of it.
20 How much vacuum you could pull and so forth. Again, I
21 didn't get into that. That was not what I was asked to
22 do. Would have been great if I had some of those

1 numbers to do a few more calculations, but I was not
2 asked to do that.
3 Q Okay. And just, in terms of which direction
4 those variables take us, is a stronger vacuum, would
5 that lead to a more detectable vacuum signal or a less
6 detectable vacuum signal as those holes are covered?
7 MR. HART: Object to form.
8 A So if I had a stronger vacuum pump, so I
9 could evacuate more air, then as the holes would be
10 covered, of course, you would pull more air out,
11 generating a bigger pressure differential or faster.
12 But again, you know, I want to remind you that means
13 that we have to put in a vacuum system and so forth in
14 there.
15 And so it's not just an issue of inserting a
16 box with some holes in it. You've got to connect the
17 vacuum system up. You've got to buy the vacuum system.
18 You have to run the vacuum system. You have to
19 maintain the vacuum system. And none of those issues
20 were discussed by Mr. Jobin.
21 Q (By Mr. Thomas) He didn't discuss the
22 expense of the vacuum system?

1 A No.
2 Q Maintenance. The expense of maintenance.
3 And you think he should have.
4 A I think if you're saying, hey, you could
5 substitute these together and the POSA would have done
6 this, you would have said, yes, it's obvious. It's
7 cost-effective and here's how you do it to make it real
8 easy, and there you go. I'm going to hand it off to
9 you with a nice little ribbon on top of it.
10 Q You'd agree that the vacuum source can be
11 located remotely from the vacuum chamber and attached
12 with a vacuum line, right?
13 A So I think at least most of the systems, but
14 I'm not sure -- this has a vacuum line but the other
15 two didn't have a fan right there. But, yes, you can
16 have a vacuum line attached to it, yes. But you still
17 need a vacuum system.
18 Q Can you look at paragraph 83 of your report?
19 A (Examines a document.)
20 Q And in paragraph 83, you are discussing the
21 vacuum manifold 44, the pneumatic manifold 44 in DePoi.
22 That's one of the things you discuss?

1 A Let's get DePoi here. Yes.
2 Q And do you have an opinion on whether there
3 is a minimum size that a vacuum manifold has to be to
4 provide a braking effect as taught in DePoi?
5 A No, I wasn't asked to analyze that.
6 Q Okay.
7 A In fact, it would have been great if I had
8 something to analyze to say this meets the minimum or
9 doesn't meet the minimum. But no such information from
10 Mr. Jobin.
11 Q And I think you're actually already begun
12 talking about it when you had the GEA reference pulled
13 up. But on paragraph 69, you're talking about the
14 suction plate 6 and negative pressure generating unit
15 of GEA, right?
16 A I think we've been there before. Yes.
17 Q And just to confirm, you haven't come up with
18 some sort of minimum size that a suction plate has to
19 be in order to apply a braking force as taught by GEA.
20 A And you know, same as my other answers. It
21 would have been great if I could have done that
22 calculation and so forth because that's what Mr. Jobin

1 recommended.
2 But, no, my job was to take a look at what he
3 wrote. And he didn't make any mention of that in terms
4 of how you would integrate these together.
5 Q And you didn't independently try to determine
6 a minimum size for a suction plate or for a vacuum
7 manifold or for a vacuum chamber that would work
8 according to the teaching of Waffner, DePoi or GEA.
9 A Right. That wasn't part of my charge. My
10 charge was to review what Mr. Tobin -- anyway. Boy, I
11 really have a hard time with his name. But, anyway,
12 yes. Jobin. There he is, right there. I have to
13 write this down so I don't forget it.
14 Q I promise I won't have to make that an
15 exhibit. That can be here.
16 A You can take my napkin. If you want to take
17 my napkin, that's pretty funny.
18 Q I don't have any stamps for it anyway.
19 Paragraph 39. This is where it leads over onto the
20 second page.
21 A Got it. Would you like to do the first page
22 or the second page?

1 Q Second page. And you have sort of a
2 composite picture there of --
3 A Yes.
4 Q You cut and paste a portion of Waffner's
5 figures and paste them over a portion of Muller's
6 figures, right?
7 A Yes.
8 Q You didn't do any calculations to determine
9 the scale at which you copied that over, did you?
10 A I think no, with the exception that the width
11 of the interleavers are the same. You know. But maybe
12 they have different interleaver widths. I don't know.
13 But should be sort of roughly the right scale.
14 But the idea here is to show the complexity
15 and so forth of trying to slip something in there that
16 is basically a small loop system with a contact sensor.
17 Yes. Just the photoelectric contact sensor as opposed
18 to all of this other stuff in there.
19 Q So that picture shows what would happen if
20 you physically incorporated Waffner's buffer, took it
21 out of Waffner and stuck it into the electric --
22 A This is what you've have to -- I think it's

1 more these are things you'd have to consider and so
2 forth, and it's nontrivial.
3 Q Yes. Is that going to be a similar answer to
4 your picture in paragraph 83 of, I suspect, no.
5 Withdraw that.
6 Is that going to be similar to your picture
7 in paragraph 70?
8 MR. HART: Object to form.
9 Q (By Mr. Thomas) Of -- here, you've
10 superimposed the GEA delay unit on top of the buffer 12
11 in Muller.
12 A (Examines a document.) Yes. This is
13 showing -- that's exactly right. So putting the GEA
14 unit in there. The idea, I don't know how you would
15 do. My expectation was that Mr. Jobin was supposed to
16 provide that to us.
17 But this is saying, look, this is what you
18 have to do. Here are the difficulties you're being
19 faced with. This is not, this is how you do it,
20 because, you know, I don't know how you do it and I'm
21 not asked how you do it. But these are the things
22 you'd have to think about and look at and this is what

1 it would entail.
2 Q So if you were to incorporate Gea's delay
3 unit bodily into Muller's buffer, this is what it would
4 look like.
5 MR. HART: Object to form.
6 A Again, it is a schematic of what it would
7 look like. These are things you would have to
8 consider. Whether you have to do some reconfiguration.
9 You have to make this area 12 larger and so forth.
10 Where you would put your vacuum, et cetera, et cetera,
11 the fans and so forth, you know, that's all up to
12 design. But the idea was, here are all the different
13 things you've got to consider. This is not a trivial
14 insertion.
15 Q And all the different things are a negative
16 pressure units, fluid line, and suction openings and a
17 suction plate. Those three things?
18 MR. HART: Object to form.
19 A Again, I don't know if that's all of them but
20 the ideas we're highlighting are, look, this is all of
21 the things you have to be thinking about. Frankly
22 speaking, this is pretty simple, right? A pretty

1 simple schematic.
2 I suspect you really get into it and say,
3 let's figure it out. It's not as easy as saying, let's
4 throw a few things in there and then you're good to go.
5 Again, I'm not here to say this is how you do
6 it. I'm here to say, Tell me how you're going to do it
7 and I'll agree or disagree with you.
8 Q (By Mr. Thomas) Do you think it would be
9 beyond a skilled person's ability to add a vacuum brake
10 to Muller that included a negative pressure unit, a
11 fluid line, and suction openings in a plate?
12 A So I think it's just going to depend on how
13 well you can shoehorn that in there, and I just don't
14 know. You know, I just don't know. Technically, if
15 you had the space and so forth, sure. Financially,
16 you're asking for it. And again, trying to maintain
17 it.
18 The question you have to ask when you
19 redesign something is to say, Well, how is this
20 benefiting the system? And the answer is, it doesn't.
21 So it doesn't make sense to put it in there. Yeah,
22 maybe if the space is there, you could insert this

1 thing, but you wouldn't do it.
2 Q Okay. And I guess, similar question as to a
3 sensor according to Waffner's vacuum sensing technique.
4 Technically, you could do it, but financially, it
5 wouldn't make sense and you're not convinced that there
6 would be a motivation to do.
7 A Yeah, the other thing is, why would you have
8 a vacuum sensor in your system if you don't have a
9 vacuum system. You're asking me about the vacuum
10 sensor in Muller?
11 Q According to Muller's teachings, yeah.
12 A But there's no vacuum in Muller, so. . .
13 Q I probably misspoke.
14 A Or maybe I'm -- maybe I'm getting the wrong
15 one here.
16 Q My question was about Waffner's technique of
17 sensing loop position using vacuum.
18 A Oh.
19 Q Would you have a similar opinion that it
20 would be technically possible to build that technique
21 into a buffer like Muller's buffer 12, but it would be
22 economically not justified and you don't think that

1 there would be a motivation to make that change?
2 MR. HART: Object to form.
3 A Yeah, so -- so if you were to put
4 Waffner's -- I've got to get these names right.
5 Waffner's system in -- excuse me, Waffner's system into
6 Muller and say, all right, we've got a vacuum going on
7 here. We're going to use a vacuum sensor and so forth.
8 Well, again, that's if you've got the vacuum
9 sensor there and the whole bit. I mean, I could use a
10 sensor there, but why would you do that when I could
11 take a 50-cent --
12 Q Yeah.
13 A -- you know, photoelectric sensor and just do
14 it with a small loop like they're doing it now.
15 Q (By Mr. Thomas) You teach undergraduate
16 engineers or graduate?
17 A Both.
18 Q You think if you took one of your graduate
19 engineers and said, hey, your project for this
20 semester, unlimited budget, but I want you to take an
21 interleaver like Muller's and design it to work with a
22 vacuum-based loop-like sensor. Do you think they would

1 be able to do that?
2 A So I think if I said, yes, I will give you an
3 A if you do this, they would go and do it, yes. If I
4 would ask them, you know, what the advantages are, you
5 know. But, yeah, we have them do all sorts of things
6 in the labs in our classes that don't make sense out in
7 the real world. But we have them do it because they're
8 simple, safe, easy, low-cost exemplars of, you know, to
9 give them some experience in certain areas.
10 Yeah. I think -- I think that they -- I
11 think that they could do it. But it's going to be a
12 lot of thinking about it and so forth. And part of the
13 key there is a unlimited budget and as long as we have
14 enough space to put it in there. It's amazing what you
15 can do with unlimited budget.
16 Q Still no fusion, but maybe the labs are
17 working on that.
18 A Well, we can talk about something like that.
19 Yes. It seems to be a universal constant that fusion
20 is 30 years away.
21 Q Do you think that in a hypothetical situation
22 or -- I'll withdraw that. Let's go a little bit more

1 grounded.
2 Looking to Waffner, which does disclose the
3 technique of using vacuum signal as a proxy for loop
4 length, right?
5 A Okay.
6 Q And figure 3 of Waffner shows, it looks like,
7 one, two, three, four, five, six holes over the vacuum
8 chamber?
9 A Oh, yeah. Uh-huh.
10 Q How many of those holes would need to go from
11 covered to uncovered for there to be a detectable
12 vacuum signal?
13 A You know, I really haven't thought about it.
14 I'd have to take a look at all the different
15 configurations, sensitivity of the sensor. What the
16 pressure differential looks like. The size. As we
17 said, right, those are three small or six small little
18 holes in this wall over here, it's going to be a long
19 time before you get it to have anything. So, yeah,
20 there's not a simple answer to that one and I really
21 haven't thought about it.
22 Q Got it. Can you look at paragraph 54 of your

1 report?
2 A Got it.
3 Q Yes. And then the second page of this
4 paragraph, so page 36 of your report.
5 A Okay.
6 Q A POSITA, P-O-S-I-T-A, would understand that
7 at most, having a vacuum system on the ascending side
8 of the loop would impact threading only at that portion
9 of the web handling device. Do you see where you wrote
10 that?
11 A Yes.
12 Q So you would agree that adding a vacuum
13 system would impact threading at least at that portion?
14 A Yes. I think adding a vacuum would impact
15 threading. It impacts threading in both a positive way
16 and a negative way. You're trying to thread your paper
17 through. And so if you -- if you slip, it's going to
18 hold the paper on there. On the other hand, you've got
19 to push the paper through.
20 So you know, there are pluses and minuses to
21 having vacuum running during threading operation.
22 Q Okay. And then paragraph 55, the first

1 sentence there, is that adding a vacuum chamber system
2 to strip guide 13 in Muller would likely hinder the
3 movement of the strip guide.
4 A Sure.
5 Q Do you see where you wrote that? Do you
6 believe it would be beyond the skill of a POSA to add a
7 vacuum chamber system to strip guide 13 that still
8 permitted the rotation up and down of the strip guide?
9 A No, I mean, I think you could move it up and
10 down. You'd have to be careful, of course, because
11 you're going to have some connections one way or the
12 other, if you've got the fan right on there.
13 Then you're going to have electrical
14 connections or you're going to have some vacuum
15 connections on there. So you'd have things like
16 fatigue and so forth to catch it on certain things.
17 But I think it's possible.
18 Again, it would be great if Mr. Jobin would
19 have said that's how he would have done it one way or
20 the other. That would have been very useful.
21 Q Did you do any quantification of how much
22 adding a vacuum system would cost?

1 A No. In terms of cost, no. I did not.
2 Q You don't look at any catalogs to determine
3 what vacuum generators cost at this time?
4 A You know, I don't think that would have been
5 particularly useful. But I had no idea what this thing
6 would look like. Again, if Mr. Jobin had said, This is
7 what we're going to do, I could have gone and looked at
8 the cost of some of the components and so forth. And
9 made an estimate, yeah, this is going to be expensive
10 or not.
11 But the reality is, it's going to add
12 expense. And I can tell you with my work in industry
13 every time you say, you ask a plant manager to add cost
14 to a piece of equipment or to one of his lines, they're
15 not going to be happy with you. And you have to
16 determine the return on investment, ROI. This is not
17 going to give you an ROI.
18 Q No, you say it's an important part of the
19 engineering process for things used in industry as, you
20 know, whether it's good business?
21 A Technoeconomic analysis.
22 Q Is that the same thing I said?

1 A Yes, but without geeky terms, yes.
2 Q That's true. I'd take your class. How much
3 does a fan cost?
4 A Again, it depends on what kind of fan you
5 want and so forth. Does it look like a computer fan?
6 Is it a bigger fan? You know, and again, if I had a
7 feel for what he was calling out we could get a
8 better -- I mean, I can't tell you off the top of my
9 head anyway, but I could go to the catalog and look it
10 up pretty quick.
11 Q You didn't do that for your report?
12 A No. It doesn't make sense if I don't know
13 what he's talking about.
14 Q The GEA438 that's in the reference. That's a
15 food processing space, right? It's a food interleaver?
16 A Yes. I have to go back and take a look,
17 but. . .
18 This is the one where he -- this is -- Bader,
19 is that right? "Bauder"?
20 Q I think he might have been the inventor, yes.
21 A Okay. I keep looking for GEA. Everything I
22 have is all electronic, so I see the GEA and click on

1 it, and there it is, but I keep hearing, we've heard
2 about Bader, or Bader.
3 Q Bader. Never thought of it before, but I
4 assume he's German if he's working for GEA.
5 A Well, think, but never know.
6 Q The GEA438 interleaver is for a food slicer.
7 A Yes.
8 Q And there's no caution in there that adding
9 the suction unit is cost-prohibitive, is there?
10 A No, not in here. But again, you know, I
11 would've, I think the key thing is if you're going to
12 implement it, this is my expectation, this is what
13 Mr. Jobin would have said, Yeah, here's the cost and
14 here's what you're going to do.
15 Q I need a moment to arrange my exhibits here.
16 All right. While you still have the GEA
17 reference open, can you look at figure 1?
18 A Yes.
19 Q Does figure 1 show a loop?
20 MR. HART: Object to form.
21 A If you look at figure 1, and this is
22 something that we had a lot of discussion on because

1 you have figure 1, and then you have figure 2 right
2 below it.
3 And so in one instance, you see number 4 and,
4 I don't know what do they call number 4 here, rolls.
5 Technical term for them. Deflection roll. So, and
6 then you look at figure 1 and you don't see the
7 deflection rollers there. So then the statement is,
8 well, at 2, is that a loop?
9 And I think really what we're looking at here
10 is not so much a loop control but we're actually doing
11 tension control on this. So we're generating the
12 appropriate amount of force, you know, along this, you
13 know, along sort of 6 and 8 over here. And if the
14 force goes higher, if we want to roll more material
15 off, we slowed the fan down. I believe that's how it
16 works on fan number 9.
17 You slow down to slow the suction so the
18 things move faster with the same amount of tension;
19 move faster and then the roll 11 will speed up. So
20 back to this loop thing, you can look at that and say
21 that's a loop, but I don't think that's a loop in the
22 classic sense of what we've been calling loop

1 control.
2 Q (By Mr. Thomas) Okay.
3 A Which is more of a tension control system.
4 Q The supply roll 11 would have an inertia to
5 it? It would be sluggish?
6 A Yes.
7 Q So would you expect, as this system operates,
8 that as the speed to the cutting blade increased, that
9 speed might change faster than the speed of material
10 leaving the roll would change?
11 MR. HART: Object to form.
12 A Well, and in -- so, again, I'm not -- I'm not
13 really here to opine on how this works, just that you
14 insert it and, you know, it's -- it's, you know, it
15 doesn't fit in particularly well, you know, in the
16 small loop 12 of Muller.
17 But I think that the two things, like I said,
18 this is a tension control and so you'll control the
19 rotational velocity of 11 in conjunction with the
20 tension on the machine. So it's a different approach
21 to control, but again, I didn't get too much into it.
22 It was really -- you know, does this fit in?

1 How do you fit it in? Does it make sense to fit in?
2 You know, to integrate it in. And I don't see it, you
3 know, and it's not explained to me how it's done.
4 Q (By Mr. Thomas) How the combination is
5 done?
6 A Yes, how you would physically insert this
7 into Muller.
8 Q Okay. Just sticking with GEA reference. So
9 as the paper travels down and then reaches a lowest
10 point, it begins traveling up. That's what this figure
11 shows?
12 A Yeah. I mean, if we look at it, it goes over
13 roller 4, it travels down over roller 4, a second
14 roller 4, and goes through -- what is that called,
15 number 1, in all this great terminology. Yeah, two
16 deflection rollers.
17 So I think those deflection rollers probably
18 bounce around a little bit to give you a little bit of
19 a buffering capability to delay unit 1, right? So to
20 delay unit 1 is what you're looking at. Yes.
21 Q All right. So a skilled person reading this
22 would not assume that that length is perfectly static.

1 They would assume some buffering capability around
2 those rollers.
3 A Again --
4 MR. HART: Object to form.
5 THE WITNESS: Pardon me?
6 MR. HART: Object to form.
7 A Yeah. Again, I -- I don't know what somebody
8 would assume and so forth. I really wasn't, you know,
9 looking at all the technical details on this. You've
10 got deflection rollers. That tells me there's some
11 deflection going on. But in general, you're
12 controlling this.
13 It's a tension control on this -- on this --
14 you know, on this strip of paper and you're controlling
15 it with a combination of the speed of your roller 11
16 and the amount of friction that you're generating in
17 the -- in the delay unit. Delay unit 1, right?
18 Q (By Mr. Thomas) So when you just told me
19 that the deflection rollers probably bounce around a
20 little bit to give you a little bit of buffering
21 capability, do you stand by that?
22 A Again, I don't know if they're called

1 deflection rollers, so I would think they must deflect,
2 but I don't know. Again, my job wasn't to say how does
3 it work or does it fit in and so forth. It was
4 actually, Mr. Jobin is the one who said this works, how
5 this fits in and how you would do it, and I didn't see
6 that.
7 Q So you don't think your job here was to
8 determine how the GEA interleaver worked?
9 A My job was to take a look at what Mr. Jobin
10 wrote and to say it makes sense or not. And it doesn't
11 make sense in terms of what he wrote and also to say,
12 you know, how do we put this together? Does that work?
13 And in there, I don't know. He hasn't told me how we
14 put this together.
15 Q And as part of your process for analyzing
16 Mr. Jobin's opinions, you didn't determine what Bader
17 is teaching?
18 A So Bader is teaching tension control system.
19 So they're controlling the tension on the strip of
20 paper. Basically -- yeah. Go ahead.
21 Q You read Bader.
22 A Yes.

1 Q Cover to cover?
2 A Yes.
3 Q You understand Bader?
4 A Yes.
5 Q So I'm curious from your understanding, do
6 you think that the bottom of that loop is static? Or
7 do you think, as I believe you told me earlier, that
8 you think there's at least some buffering capability as
9 it moves up and down?
10 A Well, it's called a -- let's see what it
11 says -- I think it only calls out a deflection roller
12 number 4. But it is really controlling it. The
13 control is -- it is a tension control system.
14 So it is not a loop control system. It's not
15 controlling a loop. There is no feedback on the loop.
16 The feedback is all on the tension that is going on.
17 (Examines a document.) Yes. So it doesn't
18 talk about a loop and deflection rollers. Deflection
19 rollers, one would say they probably deflect. Nothing
20 it perfectly rigid, so they would probably move around
21 a little bit.
22 But the reality is, this talks about a

1 tension control system that's controlled by a
2 combination of the suction fan on number 1 and the
3 rotational velocity on the roller which is 11, or the
4 roll of paper, right, which is roller 11.
5 Q Okay. But understanding the focus of Bader,
6 I certainly agree, it's on the delay unit. But Bader
7 does describe in his pictures of the path the paper
8 takes to reach that delay unit. And I'd like to know,
9 you know, yes or no, does that path include a portion
10 that is looped and moves up and down to provide a
11 buffering capability?
12 MR. HART: Objection.
13 A Again, the only thing I can tell you is what
14 the patent says. It's got deflection rollers on it and
15 so forth, and you know, it is -- this is a tension
16 control system. It's not a buffer control system.
17 It's not a buffering system. There is always some
18 compliance in the system. Also compliance in the paper
19 itself. So one could say that's the buffer as well.
20 So given that there might be some compliance
21 in there, if you want to call it a buffer, that's fine
22 from a physics perspective. But, you know, the design

1 of this system is for tension control on the paper.
2 Q (By Mr. Thomas) So after reading through
3 Bader -- withdraw that.
4 After reading through the GEA reference and
5 developing an understanding of what it discloses, and
6 drawing on your own background as an expert, as a more
7 than skilled person in this, yes or no, do you believe
8 that the bottom of that loop moves up and down during
9 the operation of the GEA interleaver?
10 A So the bottom line, I was not asked to opine
11 on that. It doesn't say on the patent, but I'm not
12 here to say whether it does or not. I wasn't asked to
13 opine on that. I was asked to understand how this
14 works and it's a tension control system and that's what
15 I took it at face value for.
16 Q I mean, you recall in your report that you
17 say that the GEA438 does not have any loop.
18 A Yes.
19 Q And is that based on a determination that you
20 came to that the bottom of that looped area does not
21 move up and down?
22 A So I think you're asking a couple of

1 different questions and I want to be clear about this.
2 There's deflection roller. Maybe that moves. Maybe it
3 doesn't. I don't know. I didn't look into it. Every
4 system has compliance. There is no loop. This is not
5 a loop control system. There's no a large loop; no
6 small loop; no loose loop. Bader has tension control
7 on it. So -- and that was it. So that was my opinion.
8 I wasn't asked to determine if the motion of
9 a deflection roller could be considered a loop. The
10 system's going to have some compliance. There's going
11 to be some kind of motion there. But I don't know what
12 it is. I wasn't asked to opine on it.
13 Q Can you look at paragraph 89 of your report?
14 A Pardon me?
15 Q Could you look at paragraph 89 of your
16 report.
17 A Sure.
18 Q You'd agree that in DePoi, the vacuum brake
19 is used to maintain sufficient web tension during rapid
20 deceleration?
21 A Right. You know, before roller 30, correct?
22 Q Yes.

1 A Yeah.
2 Q And in DePoi, if there were no vacuum brake,
3 would you agree that web 18 could continue to travel up
4 and above the loop even after rapid deceleration?
5 A Yes, I think given the appropriate
6 circumstances and so forth, sure.
7 Q That would change the amount of material in
8 the loop? If more paper exited?
9 A Yes, if more paper exited, sure.
10 Q So in DePoi, the brake helps ensure that the
11 loop doesn't become too small, right?
12 A Yes, I think that's fair enough.
13 Q Okay. Going back to paragraph 78 of your
14 report. You'd agree that the purpose of the brake in
15 the GEA438 reference is to control the transporting
16 speed, right?
17 A Yes. So -- yeah. I mean, I think all these
18 are great with the brakes and so forth for each
19 individual patent. But when you want to insert them
20 into Muller, it doesn't matter, brake or no brake. It
21 doesn't make sense to put them in there.
22 Q And in a system like Muller's now with that

1 sort of loop as in buffer 12, the transporting speed of
2 paper out of that loop would determine how much paper
3 is left in the loop, right?
4 A The transporting speed of the paper out of
5 the loop -- sure, that would be one of things that
6 would determine how much paper is left in the loop.
7 Q So controlling the transport speed of paper
8 out of Muller's loop would help ensure that the correct
9 amount of paper remains in the loop?
10 MR. HART: Object to form.
11 A I think the combination of controlling the
12 speed and the duration of, you know, the -- it's
13 basically the integral of the speed, right? Integral
14 to the velocity over time, in combination with your
15 position sensor to make sure you have the appropriate
16 amount of material in there would ensure that you'd be
17 good to go there.
18 Q (By Mr. Thomas) So, yes, in addition to
19 those other variables, one thing that would impact how
20 much paper is in the loop is the transporting speed of
21 paper out of the loop.
22 A Well, the transporting speed and the time

1 that you're transporting at the speed.
2 Q Okay. Perfect. Thanks. Fair to say that in
3 your work on this case, you've reviewed a lot of
4 material about interleaving in the food processing
5 space?
6 A Yeah, I would say so.
7 Q Would you agree that by 2017, it was known by
8 POSAs to use the same blade to cut both food and
9 interleaf?
10 A I'd have to think about that. I just don't
11 know.
12 Q The system in GEA shows food at interleaf
13 being cut by --
14 A The same blade? Okay.
15 Q Do you agree with that? I think figure 2
16 shows food coming in.
17 A Yeah (Examines a document.) Yes. Cover
18 figure 2. Sure.
19 Q Yes.
20 A And that was, what, 2019, or is it some
21 other -- no, there it is. The file date is 2017. Just
22 barely made it. December 20th, huh.

1 Q And in Muller, that's another reference where
2 food and paper are both cut by the same blade?
3 A Well, I don't -- if you could point that one
4 out to me. Again, I didn't really focus on food and
5 paper getting cut by the same blade. I just focused on
6 what Mr. Jobin was writing down. So that's, I'm a
7 little reticent to say, yes, of course.
8 Q Maybe paragraph 2 would be a good place to
9 look. The interleaver being cut off from a interleaver
10 strip preferentially simultaneously with the respective
11 slices of food?
12 A Okay. Sure.
13 Q Is that enough to give you assurances that
14 Muller discloses preferentially cutting off food and
15 interleaver at the same time with the same blade?
16 A Yes, I think that's fine. Sure.
17 Q And Muller is a 2016 reference?
18 A It sure is.
19 Q And Bader is also a 2016 reference if you
20 look at that foreign application priority dates. At
21 GEA '438.
22 A Oh, I'm sorry. 438, Bader. Yes, there it

1 is. Yes.
2 Q So in 2016, we have two references where
3 food, paper, cut with the same blade, right?
4 A Yes.
5 Q Have there been improvements in web handling
6 since 1970s?
7 A Oh, I would say so, yes.
8 Q Have there been improvements in industrial
9 food processing since the 1970s?
10 A Yes, I would say so.
11 Q What are some of the most important
12 improvements, in your opinion?
13 MR. HART: Object to form. Foundation.
14 Relevance.
15 A You know, I -- again, I really haven't been
16 asked to opine about this and haven't really thought
17 much about it. But I would say things like speed and
18 accuracy and so forth. I mean, that's typically any
19 manufacturing process is what you look at in terms of
20 improvement.
21 Q (By Mr. Thomas) More effective machine
22 control?

1 A Well, that would give you your speed and
2 accuracy, sure, or precision.
3 Q Can you say one way or the other if,
4 generally speaking, there are benefits to adding
5 additional points of tension control in web handling
6 machines?
7 A I really haven't thought much about that in
8 terms of what I was asked to do. So I'm not ready to
9 opine on anything like that.
10 Q Even from your own personal work on paper
11 handling machines? Have you considered whether there
12 are benefits to adding tension control points?
13 A Again, I haven't thought about it and how it
14 would apply here, so it just doesn't -- yeah, I'm just
15 not comfortable answering that.
16 Q I think earlier today, you had told me that
17 you didn't really consider the claim elements of the
18 challenged patents, what the scope of those claims
19 were, right?
20 MR. HART: Object to form.
21 A Yeah, once again, I was asked to review
22 Mr. Jobin's report and comment on if it made sense; how

1 things came together. And if a POSA would have thought
2 about doing things that way. And that's what I stuck
3 to in terms of my efforts.
4 Q (By Mr. Thomas) Okay. So sort of
5 specifically following on to that, you didn't form an
6 opinion one way or the other whether the Fukuchi
7 reference discloses a removal device in the manner
8 claimed by the patents, did you?
9 A No, I don't think -- that's not in my report.
10 I would not have an opinion on it.
11 Q Okay. You didn't offer any opinions on
12
13
14
15
16
17
18
19
20
21
22

1
2
3
4
5
6 whether a person of skill would see a benefit or not in
7 making a removal device? So removing material from the
8 spool with a two-part device instead of a one-part
9 device? You don't have opinions on that, correct?
10 A Yeah, again, if it's not in my report, I
11 don't have an opinion on it.
12 Q You don't recall that being in your report?
13 A I don't, but if it's there, you can point it
14 out to me. And we can talk about.
15 Q I -- I didn't see it. And it sounds like you
16 spent a lot of time looking at your report, and you
17 didn't --
18 A Yeah, I like this report.
19 Q You haven't offered an expert opinion in this
20 case whether the tension control in Fukuchi is
21 redundant of the tension control in Jordan?
22 A No, I don't believe that I've talked about

1 that.
2 Q Do you understand that Jordan discloses a
3 magazine roll 23, that's what they call that spool?
4 A I don't know. We could take a peek at that
5 and so forth.
6 Q Take a quick peek.
7 A Sure. And if you could point to in my report
8 where we discuss it, that would be great too.
9 Thank you.
10 Q So do you see feature 23 in Jordan?
11 A There it is. Yes.
12 Q And then I think toward the end of Jordan,
13 column 5, it talks about the paper feed?
14 A For a magazine roll 23. Yes.
15 Q Yes. And then, the Fukuchi reference, do you
16 recall if that also discloses a roll of web material?
17 A No, that, I don't recall at all.
18 Q Let's see if I can get that one for you.
19 Here's Fukuchi, and I think it's feature 16,
20 which is called a delivery bottom.
21 A (Examines a document.) Delivering a
22 belt-like material, paper 16, bound in a roll. It's

1 column 5.
2 Q Okay. And to preface, I don't see it in your
3 report.
4 A Yeah, I don't recall having it in my report.
5 Q Do you believe you offer any opinion in this
6 case as to whether there's material differences between
7 the roll in Fukuchi, which is feature 16, and the roll
8 in Jordan, which is feature 23?
9 A Not that I recall.
10 Q They both appear to be spooled web material,
11 that is drawn off of, right?
12 A Yes.
13 MR. HART: Object to form. Foundation.
14 A So I mean, they are, this is sort of chip
15 material and so forth, but if they are paper that goes
16 in between the food then, you know, I think they're
17 pretty similar in nature.
18 Q (By Mr. Thomas) I think Fukuchi might
19 actually be tobacco. I think it's filter paper as I
20 recall?
21 A Yes.
22 Q Anyway, it's a roll of paper products?

1 A Yes.
2 Q And sitting here today, do you think there's
3 sort of a material difference between those two rolls
4 as far as they affect patentability?
5 MR. HART: Object to form. Lacks foundation.
6 A I tell you, you know, that sounds like a
7 legal question. I'm not a lawyer, and it's not part of
8 what I had to do.
9 Q (By Mr. Thomas) Not an opinion you formed?
10 A Right.
11 Q All right. Excellent.
12 MR. THOMAS I could probably take a little
13 break now.
14 MR. HART: Okay. Sounds good.
15 THE WITNESS: Sure.
16 THE REPORTER: We're off the record.
17 (Recess 2:40 p.m. to 2:48 p.m.)
18 THE REPORTER: We're on the record.
19 Q (By Mr. Thomas) All right. Can you take a
20 look at paragraph 63 of your report?
21 A Yes.
22 Q You have a sentence in there, put simply,

1 Jordan describes what it describes. Do you see that?
2 A (Examines a document.) Yes.
3 Q And by that, do you mean that you're focused
4 on what is specifically mentioned in the Jordan
5 reference?
6 MR. HART: Object to form.
7 A I think it kind of speaks for itself. It
8 describes what it describes. I'm not sure how else to
9 say it. It's got a description, and that's what it is.
10 Q (By Mr. Thomas) So what is specifically
11 written in Jordan, that is a description?
12 A Yes. I mean, that's -- yeah.
13 Q Can you turn back to your section on legal
14 standards toward the beginning of your report,
15 paragraph 20?
16 A (Examines a document.)
17 Q There are a couple of these I want to just
18 make sure I understand what opinions you've given in
19 this case. So if you look at paragraph 26, about
20 secondary considerations. You don't believe you've
21 provided opinions on secondary considerations, have
22 you?

1 A (Examines a document.) Yeah, I don't think
2 so. Yeah. I'm not a lawyer and so forth. I've looked
3 at what Mr. Jobin has said. And my job was to
4 understand what he wrote and to agree, disagree, and
5 comment on that. So --
6 Q Okay.
7 A Yeah, none of these legal terms.
8 Q All right. Can you read through paragraph 25
9 about when a reference teaches away?
10 A (Examines a document.) Okay.
11 Q Does that paragraph accurately capture your
12 understanding of the legal doctrine of teaching away?
13 A Yes, my poor nonlawyer engineer understanding
14 of it.
15 Q Do you believe that you offer opinions in
16 this report of any of the reference teach-away from the
17 patented combination?
18 MR. HART: Object to form.
19 A One more time on the question? I'm sorry.
20 MR. THOMAS: Actually, if you could explain
21 your objection so I could ask a better question.
22 MR. HART: Yes. So I think you said, you

1 asked whether he had proffered an opinion that the
2 prior art teaches away from the patented combination?
3 I think the standard for teaching away is from the
4 combination, the proposed combination, not the
5 challenged claims, but the combination of prior art
6 references.
7 MR. THOMAS: Got it.
8 MR. HART: Does that make sense?
9 MR. THOMAS: In hindsight, perfect sense. So
10 I'll reask my question.
11 Q (By Mr. Thomas) Do you believe you offer any
12 opinions that any of the references you considered
13 teach away from the proposed combination?
14 A Yeah, I'm sort of struggling, because there
15 are definitions here and the whole bit. So let's be
16 clear. Teach away is --
17 Q As you understand it from paragraph 25?
18 A It's unlikely to be productive --
19 reference -- yeah. So -- reference will teach away.
20 So the combinations, yeah, the combinations that were
21 proposed are -- well, at least as far as I can tell,
22 they're not going to work particularly well and you

1 wouldn't implement them and so forth.
2 If there was more detail, say, yeah, this is
3 how you're going to do it and maybe he has a clever way
4 of doing it and I'm just not seeing it. But, you know,
5 then okay, that would be fine. But there's just not
6 enough information to say, yeah, that's going to work.
7 So based on everything that I've seen, these
8 combinations don't make a lot of sense.
9 Does that give you the right answer? Or does
10 that give you the answer you're looking for?
11 Q Maybe. So you're not saying that the Muller
12 reference would teach a person of skill away from
13 exploring that vacuum sensors.
14 A Oh. I mean, in the sense that -- you know,
15 the question comes up, why would you put a vacuum
16 sensor on there. The vacuum sensor doesn't improve
17 Muller in any way. So if that counts as teaching away,
18 you know, it doesn't say you can't do a vacuum sensor.
19 But it certainly doesn't make sense to put
20 the vacuum sensor on there, at least as far as I can
21 tell, and I just don't get any relief of that from
22 Mr. Jobin's report.

1 Q Yes, I think cutting through the legalese a
2 bit, that's maybe the distinction there, is the
3 difference between -- how did you say it -- the
4 difference between saying you can't or you shouldn't do
5 the vacuum sensor, versus in your opinion, whether
6 there's a motivation to do it. That's not a question.
7 So withdrawn. But. . .
8 You don't believe that you're applying the
9 teaching away doctrine.
10 A Yeah, not saying don't do this -- I guess I'm
11 saying don't do this, but for reasons that you just
12 wouldn't do it.
13 Q Paragraph 23, the second bullet point. You
14 said you understand that it's necessary to specifically
15 identify which elements of the patent claim appear in
16 each of the asserted references.
17 A Which one are we looking at here?
18 Q Paragraph 23.
19 A Okay. There it is. Yes.
20 (Examines a document.)
21 Q So focusing on what you mean by appearing in,
22 as you use it there, for an element to appear in the

1 reference, do you believe that the reference has to
2 specifically talk about or mention that element?
3 MR. HART: Object to form.
4 A One more time. Which bullet are we looking
5 at?
6 Q (By Mr. Thomas) Bullet 2. Specifically
7 identified --
8 A 2. Sorry.
9 (Examines a document.) And now your question
10 once again is?
11 Q Is, when you talk about whether an element
12 appears in an asserted reference. And your
13 understanding for an element to appear in the
14 reference, does that mean that the reference is
15 specifically mentioning the existence of that element?
16 MR. HART: Object to form. Foundation.
17 Relevance.
18 A And again, I -- I'm not a lawyer here. You
19 know. I wasn't asked to sort of do the legal part of
20 it. I was told to look at Mr. Tobin's -- or, I'm
21 sorry, Jobin's report, but my engineering understanding
22 is that, you know, the elements of a claim, hey, the

1 claim says this, and yeah, here it is in this
2 particular invention or system.
3 Q (By Mr. Thomas) So in coming to an
4 understanding of what these references taught, you
5 focused on what was specifically written, mentioned,
6 talked about, in those references.
7 MR. HART: Object to form.
8 A I focused on what Mr. Jobin said and how you
9 would put it together. And my job was, do they go
10 together? Does it make sense, you know. And would
11 somebody do it. And would it really improve the
12 system, right? So you can bolt a whole bunch of things
13 on there, but if it doesn't change how the system
14 operates or if it doesn't give the system advantage or
15 improve its performance then, you know, how does it all
16 come together.
17 So that was my job, to look at those things.
18 I don't think -- I don't think that I looked at claims
19 and said, Here's this claim, here's that claim, and
20 sort of element, and so forth.
21 Q (By Mr. Thomas) So do you believe that there
22 are any elements that Mr. Jobin said were taught by a

1 reference and you disagree. You say, no, that
2 reference doesn't teach the existence of that element?
3 A I can't recall saying that, but if it's in my
4 report and you want to bring it up, that would be fine
5 to do that. Again, I think I've told you what I was
6 hired to do and that's what's in the report.
7 Q Yes. A specific example I'm thinking about
8 is with Jordan. I think Mr. Jobin's opinion is that
9 Jordan teaches the element of a single cutting area
10 that cuts both food and --
11 A Right.
12 Q -- interleaf. Is your opinion that Mr. Jobin
13 is incorrect in that Jordan does not teach that
14 element?
15 A Well, I think it's -- I think the term was
16 preamble, but I can go back and take a look.
17 (Examines a document.) Make sure I'm going
18 through the right stuff here. Yeah.
19 So and again, a lot of this is -- the legal
20 terminology and so forth, but it's, you know, if you
21 take a look at paragraph 60, it says I've been asked to
22 assume that the preambles of each independent

1 challenged claim are limiting.
2 And so we go through the whole explanation
3 and so forth. But my understanding is that this is
4 talking about cutting the paper or the interleaver and
5 the food product in the same area. And so if you do
6 that, if we look at Jordan, Jordan talks about, we --
7 and I'm looking here on the -- on the cover page of
8 Jordan. But I think that's what figure 2 -- oh, no,
9 it's figure 1 all squished together. But that is
10 figure 1.
11 And so the assumption with Jordan is that a
12 sliced food product is going to come in, it's going to
13 be weighed, and then it's going to be carried over,
14 vacuum system, so sort of an inverted conveyor belt.
15 And then if it's of the right size, it'll get dropped
16 down and then the paper is sliced, and the interleaver
17 is dropped on top -- yes, on top of the food product,
18 and the next one is put together.
19 So my understanding is that both the food
20 product and the paper are not sliced in the same area.
21 And in order to do that -- I think it's my figure. . .
22 Yeah. In order to have that in place, you'd

1 have to take out -- so the slicing of the food would
2 have to come after the weighing and sort of depositing
3 and so forth of the material. You'd have to take all
4 of this out and you'd really pretty much eliminate what
5 you have going on with Jordan.
6 That was sort of my understanding and I was
7 told, this is how it works. That's the preamble and so
8 forth, think about it this way, and that's how I
9 thought about it.
10 Q So in terms of your understanding of what the
11 Jordan reference teaches about where cutting is taking
12 place, you came to that understanding by focusing on
13 what is specifically written down and drawn in Jordan,
14 rather than considering generally what a person of
15 skill in this area would know about food slicers in
16 early 2017.
17 MR. HART: Object to form.
18 A So I -- I think that I -- I came to an
19 understanding of Jordan by reading Jordan, right? And
20 so I mean, I guess, the document says what it says,
21 right? So there's no food slicing in here. You say,
22 okay, well, there's no food slicer on here.

1 And I was told with the preamble, et cetera,
2 et cetera, that, you know, the food product and the
3 paper need to be sliced in the same area. So that's,
4 well, there is no food slicing here.
5 So it's that -- yeah. I mean it's -- I think
6 it's pretty straightforward. I read this. No food
7 slicing. Okay.
8 Q (By Mr. Thomas) Got it. You can go through
9 section 4, the relevant legal principles, to confirm.
10 But it's correct that you have not been provided a
11 legal definition of reasonable expectation of success,
12 right?
13 A Yeah, I don't recall, but -- I don't recall
14 getting that information. We can go look at it if you
15 want me to go look at my report. If my report says it,
16 I agree with my report.
17 Q You don't believe you've offered any opinions
18 regarding reasonable expectation of success in this
19 report, correct?
20 A Expectation of success of? Like -- like,
21 what Mr. Jobin's been writing about, that this is going
22 to work? Because I don't believe he's going to be

1 successful on it. But if he gave me some more
2 information, maybe he'd be successful. Is that what
3 we're talking about? Clearly not.
4 Q No, not who is more reasonable to be
5 successful in litigation. That's the context there.
6 No. What I'm asking is, do you offer any opinions on
7 whether a person of skill asked to make this
8 combination, the proposed combination, would have a
9 reasonable expectation that they could succeed in
10 making that combined system?
11 A With your one addition of an infinite budget,
12 or no?
13 Q Can you answer both ways?
14 A I can answer -- yeah, if I have an infinite
15 budget and I could expand the machine out and so forth,
16 I think that, yeah. . . yeah. I think it might take a
17 little bit more than a bachelor's with a couple of
18 years experience, but it could be done.
19 I think someone with six years of experience,
20 or six or seven years of experience, could do it with a
21 big budget and the whole bit. But the question is:
22 Would they do it? And the answer is no.

1 Q And as far as could they do it, that's just
2 you sort of speculating across the table today. You
3 don't have a opinion written down in your reports.
4 A No. No, I mean, you know the reality is it
5 would be great because I could give you a better
6 opinion if they showed us how to do it.
7 Q Okay. But no opinions on expectation of
8 success.
9 A No.
10 Q Okay. I think this topic has probably come
11 up at the margins throughout today, but if you look at
12 paragraph 29, for example, you -- it's -- you write
13 that the, Petitioner fails to explain with
14 particularity the proposed combination.
15 Do you understand the degree of particularity
16 required in a petition to be a legal issue or an
17 engineering issue?
18 A Look, I'm not a lawyer, so I'm looking at it
19 from an engineering perspective.
20 Q Okay. Do you believe that that's the correct
21 standard for the Board of Administrative Patent Law
22 judges to be looking at it from?

1 MR. HART: Object to form.
2 A Again, I'm not a lawyer, so I just don't have
3 an opinion on that.
4 Q (By Mr. Thomas) Okay. Do you feel like you
5 came to an opinion based on your engineering background
6 as to whether the petition was reasonably particular?
7 Sufficiently particular?
8 A Yes.
9 Q And what sort of engineering knowledge did
10 you apply to reach that conclusion?
11 A Well, much of what, and I agree, we've sort
12 of touched on this around the borders and so forth.
13 You know, what are the sizes of certain things. You
14 know, how would they fit together. You know, what
15 additions would you need. I think the other thing --
16 and, you know, to give you a feel for costs, will it
17 fit in -- in the space that's provided.
18 And I think the other important part is,
19 really, what does it add to the system? And again, I
20 think that Muller is sort of the foundational system or
21 basis of what you want to look over. You know, what is
22 the inserted system added to Muller when you put them

1 together? So how do you get a better system? It just
2 wasn't really described.
3 Q So I think we can break that down into two
4 parts. You understand that Jobin, Mr. Jobin, opines
5 that the system would be improved because of better
6 control of the length of loop, better control of the
7 tension on the loop, and threading benefits. Correct?
8 A That's his opinion, yes. And the question
9 that I have is, well, what's the improvement? How much
10 improvement is it, right? And so he doesn't -- it will
11 be improved. You know, there's no metric there to
12 understand what that improvement is or how it's going
13 to come about.
14 Q But he's at least particular about the three
15 areas of improvement.
16 MR. HART: Object to form.
17 A Again, he talks about the areas of
18 improvement but he doesn't say what those improvements
19 are.
20 Q (By Mr. Thomas) In terms of like a
21 magnitude?
22 A This car is better than this other car. What

1 does that mean? Is it got better fuel efficiency? Is
2 it faster? Better acceleration? You know, what is it?
3 And do you really need it? Right? This car can go 300
4 miles an hour as opposed of 200 miles an hour. I'm
5 never going to go 200 miles an hour on these roads
6 anyway. You know, the reality is, would you do that?
7 I don't know. What's the improvement and how much
8 improvement do we see.
9 Q So you view Mr. Jobin's declaration as just
10 saying the proposed Cognex combination would be a
11 better interleaver and giving no specific reasons why.
12 A No, I don't think that I said that. He said,
13 Well, I'm going to improve the loop control. And my
14 question would be, Well, how is it going to improve the
15 loop control? To what extent is it going to improve
16 the loop control? And, you know, does that make the
17 machine better.
18 And if, by the way, I would put all of this
19 in there and it would cost me X dollars, would a
20 customer pay that extra money to get that extra
21 improvement and control, whatever it might be?
22 Q I guess I'm struggling to compare that to the

1 car analogy you just gave, because it seems you would
2 be fine with someone saying the benefits of my new car
3 are better speed and better gas mileage.
4 But you have a problem with Mr. Jobin saying
5 the benefits of the modified interleaver are better
6 tension control, better loop length determination, and
7 better threading.
8 A So let's get more specific. Better gas
9 mileage. What gas mileage are you looking for? You
10 know, are we going from 1 mile per gallon to 2 miles
11 per gallon? Are we going from 20 to 30 or 40? In
12 terms of what he's talking about in terms of loop
13 control, how much improvement is it going to be and are
14 we really going to benefit from it? I don't know,
15 right?
16 Is it a tighter loop by a meter? A
17 centimeter? A micron? A nanometer? You know? And
18 what's it worth paying for? So it's great to say I'm
19 going to do this and move it forward, but what's the
20 metric? If -- even if you say it's going to improve by
21 50 percent, 50 percent of what? This is always a
22 question.

1 When we do a review, whether it's over on a,
2 you know, on an industrial system or a military system,
3 you want to know what the improvement is and what's
4 your metric. And typically, there are several metrics
5 and you're going to see the trade-offs. In this
6 particular case, trade-off is going to be performance,
7 downtime, maintenance, cost, you know, and speed. So,
8 look, or precision. If I can slice things more
9 precisely, okay.
10 Q So you would have liked to see Mr. Jobin
11 quantify his proposed benefits with numbers.
12 A So I, number one, numbers would be great, but
13 at least say, were these great, okay, better loop
14 control. What is that going to give me? Is it going
15 to reduce the amount of paper that I'm going to be
16 using?
17 I mean, again, I realize if you've got
18 thousands of slices or tens of thousands of slices a
19 day and you can save a millimeter of paper on each
20 slice because I've got tighter loop control. I don't
21 know, right, what the answer is, but that would be
22 something that I would love to see.

1 And he doesn't need to say a millimeter. He
2 would just need to say tighter loop control would allow
3 you to get more accurate on your paper instead of more
4 consistent with that. But I didn't see any of that in
5 there.
6 Q Did you read the institution decisions for
7 these two cases?
8 A I don't think so. I may have, but I don't --
9 I don't recall.
10 Q Are you aware that in their preliminary
11 response, Weber argued that the two petitions lacked
12 particularity?
13 A No, I'm not aware of that.
14 Q Were you aware that in their institution
15 decision, the Board made the determination that the
16 petitions were sufficiently particular to institute?
17 MR. HART: Object to form. Foundation.
18 Relevance.
19 A Yeah, once again, I don't recall. I mean, I
20 know something went on there, but I don't -- you know,
21 my focus was on Mr. Jobin's report. So. . .
22 Q (By Mr. Thomas) Yes. I'll hand you what is

1 page 9 in the '013. It's the institution decision.
2 Can you turn to page 8 of this?
3 A (Examines a document.)
4 Q And can you read the paragraph underneath the
5 table?
6 A Sure. Provisur also enumerates the specific
7 elements of independent claims and explains in greater
8 detail with annotated figures, how Muller and/or
9 Waffner teaches each of those claim elements, See ID at
10 28 through 38 claim 2, 47 through 52, claim 17, 53
11 claim 19.
12 And Provisur provides credible and unrebutted
13 testimony from its expert as to why one of ordinary
14 skill in the art would have combined the teachings of
15 Muller and Waffner with an expectation of success.
16 See ID at 38 through 42, citing Exhibit -- is that
17 right, Exhibit 1003, 199 -- paragraphs 199 through 228
18 and 233 through 238.
19 Q Do you disagree with the conclusion in that
20 paragraph?
21 MR. HART: Object to form. Foundation.
22 Relevance.

1 A Yeah, I mean, this is the first time I've
2 looked at it, so I have -- you know, I haven't thought
3 about it and so forth. And you know, I -- you know, I
4 just really haven't, you know, looked at this or
5 anything. So I'm not going to agree or disagree with
6 this.
7 Q (By Mr. Thomas) But sitting here today, it's
8 your opinion that the petition was not sufficiently
9 particular?
10 A I. . . I don't know. I mean, I really don't
11 know. This is the first time I've seen it, this one
12 paragraph, so I just don't know.
13 Q Okay. The corresponding document. This is
14 paper 9 from the -- what did I just do with it. This
15 is paper 8 from the '823.
16 A Thank you.
17 Q And can you turn to page 16 of this document?
18 A Yes.
19 Q And you see where it discusses in regard to
20 independent claim 1 of the '823 patent using Provisur's
21 number designation that are above, Provisur maps the
22 claim preamble and limitations 1.1 material store and

1 1.2 removal device to Muller. Petition 24 through 28.
2 In addition, Provisur maps limitations 1.3, a
3 loop store having a break for the material web that
4 actively increases the friction for the material web
5 and 1.4, wherein the loop store comprises a contact
6 surface belonging to the brake for the material web to
7 the combination of Muller and GEA438 in at 28 through
8 31.
9 Provisur's arguments regarding the alleged
10 impediment ability of the claim 1 of the '823 Patent
11 are further supported by the as yet unrebutted
12 declaration testimony of Mr. Jobin, see petition 24
13 through 36, who has 32 years of experience in product
14 and technology development as a mechanical engineer,
15 consultant, and entrepreneur.
16 Do you see that paragraph?
17 A Yes.
18 Q That, today, is the first time you're reading
19 that?
20 A Yes, I'm pretty sure.
21 Q And you understand that the Board considered
22 the issue -- I'll withdraw that.

1 You have no understanding as to whether the
2 Board previously considered the issue of particularity
3 and institute of petition, correct?
4 A Correct.
5 MR. THOMAS: Probably close to wrapping up,
6 but if I could take five to make sure I didn't miss
7 anything.
8 THE REPORTER: We're off the record.
9 (Recess 3:20 p.m. to 3:26 p.m.)
10 THE REPORTER: We're on the record.
11 MR. THOMAS: I really appreciate your time
12 today. I don't have any further questions for you.
13 THE WITNESS: Oh, okay. Thank you very much.
14 MR. HART: Nothing from Patent Owner in the
15 proceeding.
16 THE REPORTER: Reading and signing?
17 MR. HART: Sure.
18 (Deposition adjourned at 3:27 p.m.)
19 * * *
20
21
22

1 REPORTER CERTIFICATE

2 I, JASON T. MEADORS, Registered Professional
3 Reporter, Certified Realtime Reporter, Certified
4 Realtime Captioner in the State of Colorado, appointed
5 to take the deposition of
6 THOMAS R. KURFESS, Ph.D.,
7 certify that prior to the deposition the witness was
8 sworn by me to tell the truth; that the deposition was
9 taken by me at 717 17th Street, Suite 1400, Denver,
10 Colorado, on December 11, 2024.
11 I certify that the proceedings were reduced to
12 typewritten form by computer-aided transcription
13 consisting of 215 pages herein; that the foregoing is
14 an accurate transcript of the proceedings.
I certify that I am not related to, employed
15 by, of counsel to any party or attorney herein, nor
interested in the outcome of this litigation.
16 I further certify review of the transcript was
requested.
17 Attested to by me this December 15, 2024.
18
Jason T. Meadors, RPR, CRR, CRC
for Digital Evidence Group
19
20 Re: Provisur Technologies v. Weber Food Technology
21 Reporter: JM
22 Proofer: SLM

1 Thomas R. Kurfess, Ph.D., c/o
ERISE IP
2 717 17th Street, Suite 1400
Denver, Colorado 80202
3
4 Case: Provisur Technologies, Inc., v. Weber Food Technology GMBH
Date of deposition: December 11, 2024
5 Deponent: Thomas R. Kurfess, Ph.D.
6
7 Please be advised that the transcript in the above
8 referenced matter is now complete and ready for signature.
9 The deponent may come to this office to sign the transcript,
10 a copy may be purchased for the witness to review and sign,
11 or the deponent and/or counsel may waive the option of
12 signing. Please advise us of the option selected.
13 Please forward the errata sheet and the original signed
14 signature page to counsel noticing the deposition, noting the
15 applicable time period allowed for such by the governing
16 Rules of Procedure. If you have any questions, please do
17 not hesitate to call our office at (202)-232-0646.
18
19
20 Sincerely,
Digital Evidence Group
21 Copyright 2024 Digital Evidence Group
Copying is forbidden, including electronically, absent
22 express written consent.

1 Digital Evidence Group, L.L.C.
1730 M Street, NW, Suite 812
2 Washington, D.C. 20036
(202) 232-0646
3
4 SIGNATURE PAGE
Case: Provisur Technologies, Inc., v. Weber Food Technology GMBH
5 Witness Name: Thomas R. Kurfess, Ph.D.
Deposition Date: December 11, 2024
6
7 I do hereby acknowledge that I have read
and examined the foregoing pages
8 of the transcript of my deposition and that:
9
10 (Check appropriate box):
( ) The same is a true, correct and
11 complete transcription of the answers given by
me to the questions therein recorded.
12 ( ) Except for the changes noted in the
attached Errata Sheet, the same is a true,
13 correct and complete transcription of the
answers given by me to the questions therein
14 recorded.
15
16 _____ _____
17 DATE WITNESS SIGNATURE
18
19
20
21 _____ _____
22 DATE NOTARY

1 Digital Evidence Group, LLC
2 1730 M Street, NW, Suite 812
3 Washington, D.C. 20036
4 (202)232-0646
5
6 ERRATA SHEET
7
8 Case: Provisur Technologies, Inc., v. Weber Food Technology GMBH
9 Witness Name: Thomas R. Kurfess, Ph.D.
10 Deposition Date: December 11, 2024
11 Page No. Line No. Change
12
13
14
15
16
17
18
19
20
21 _____ _____
22 Signature Date

A
a.m 1:17 58:11 58:11 113:6
ability 72:12 84:7 84:15 182:3 190:9 241:10
able 21:4 73:8 113:19 132:7 140:5 171:12 179:4 193:1
absent 244:21
absolutely 28:18 74:1
abstract 116:22 118:1
accel/decel 125:4
accelerate 35:13 37:5,16 38:14 63:21 139:13 143:22
accelerated 36:19 121:20
accelerating 36:14 38:7 77:9 143:21
acceleration 35:2 35:6,11,14 36:20 37:9,12 37:13 38:4,5,11 63:21 114:2,10 115:11 118:5,6 118:9 120:10 120:11,14 126:1 235:2
acceleration-de... 120:5
acceleration/de... 122:12
acceleration/hi... 145:1 152:17 153:22
accelerations 29:9,12 35:5 37:22 77:15 89:14 114:19 117:16 124:22 130:1
accomplishes 147:4
accuracy 85:5 86:7 213:18 214:2
accurate 15:5 124:10 162:22 238:3 243:14
accurately 221:11
accused 6:21 9:3
achieve 88:5
acknowledge 245:7
acknowledging 83:12
acting 157:22
action 95:15
active 157:13
actively 241:4
activities 10:7
actual 7:12 111:1 111:3,3
actuator 94:3
actuators 8:13
add 76:8 89:22 95:3 137:5 142:1 147:9 190:9 196:6 197:11,13 233:19
added 16:16 94:15 233:22
adding 28:16 131:3,6 195:12 195:14 196:1 196:22 199:8 214:4,12
addition 137:22 144:15 210:18 231:11 241:2
additional 78:2,4 131:4 214:5
additions 233:15
address 48:22 77:19 149:10 150:22
addressed 148:22 151:1
addressing 86:19 89:9 114:17
adjourned 242:18
Administrative 232:21
adopted 80:8
advantage 131:10 226:14
advantages 193:4
adverse 125:1,4
advise 244:12
advised 244:7
Advisory 11:4
aerospace 33:1
affect 219:4
affiliates 9:15
affirmative 126:22
ago 6:10,12 28:19 43:3
agree 54:5 59:12 60:5,19 69:5 74:15 76:21 87:20 98:5,14 101:14 110:7 120:22 121:16 125:9 143:12 158:14 162:6 165:15 171:4 184:10 190:7 195:12 206:6 208:18 209:3 209:14 211:7 211:15 221:4 230:16 233:11 240:5
agreed 21:10 79:17,19 179:7
agriculture 12:15
ahead 96:12 204:20
AI 13:21
air 45:7 46:2,2,5 67:2,3,4 183:9 183:10
aligns 35:9
alleged 241:9
allow 238:2
allowed 244:15
allows 63:20 138:22 139:7
amazing 193:14
amount 10:21 11:8 12:12,14 160:3 168:16 169:15,18 177:5 179:19 200:12,18 203:16 209:7 210:9,16 237:15
analog 69:13 74:16 96:18 97:2 107:6,8 108:13
analogy 236:1
analysis 50:13 159:7,13,13 165:8,12 172:13 179:13 181:19,21 182:1,1 197:21
analyze 40:3 172:6 185:5,8
analyzed 39:17 130:3 172:10
analyzing 204:15
and/or 46:4 80:12,16 239:8 244:11
Angelina 2:22
Angie 4:9
annotated 239:8
annotations 62:10
answer 14:13 23:9 56:10,17 61:5 62:22 99:13 119:20 132:3,6 133:14 134:18 149:19 165:12 188:3 190:20 194:20 223:9,10 231:13,14,22 237:21
answered 60:18
answering 214:15
answers 14:14 185:20 245:11 245:13
anticipated 48:12
anybody 90:3,9 90:11 98:7 123:18 134:7 164:2
anytime 124:4
anyway 186:10 186:11,18 198:9 218:22 235:6
anyways 118:10
apart 26:17
apiece 19:14
apologies 166:9
apologize 26:13
apparatus 88:17 127:1
Appeal 1:2 4:21
appear 218:10 224:15,22 225:13
APPEARANC... 2:1
appeared 6:13
appearing 224:21
appears 108:14 225:12
applicable 244:15
application 68:22 69:2 133:9 212:20
applications 75:9
applies 79:8
apply 77:20

185:19 214:14 233:10
applying 224:8
appointed 243:4
appreciate 60:18 242:11
appreciated 179:20
approach 73:21 128:6 201:20
appropriate 200:12 209:5 210:15 245:10
area 10:22 11:15 12:21 25:13 27:17,22 33:3 37:8 60:2,10,20 79:22 88:18 113:15,19 114:12 119:10 138:2 144:17 147:11 149:11 149:13 152:22 163:10 167:8 171:12,13 181:10 189:9 207:20 227:9 228:5,20 229:15 230:3
areas 8:8,16 13:7 193:9 234:15 234:17
argue 112:2
argued 238:11
argument's 41:4
arguments 241:9
arrange 199:15
arrangement 98:8
arrow 157:20 158:11
art 20:13 21:11 29:18 48:12,15 50:6 52:8 59:13 65:16,19,20 66:9,14 70:13 74:6 76:10 79:4 79:15 88:7 90:17 134:11 134:12,13 222:2,5 239:14
arts 43:5
ascending 157:1 195:7
aside 72:1 74:14
asked 6:5 20:19 40:3 41:10,11 41:18 42:4,9,15 43:8 44:7,13 45:2,13 46:10 50:19 51:4,5,11 51:18 52:19 56:14 57:21 60:18,22 61:1,6 67:10 69:4 83:9 83:19 85:16 86:1,2 87:10,19 87:22 92:3 119:19 132:3,6 134:15,19 140:22 141:19 141:19 142:6,8 147:14 149:17 150:3 151:8 159:13 165:14 172:2,3 173:6 174:6,14,15 177:21 178:17 179:8,11,11 182:21 183:2 185:5 188:21 207:10,12,13 208:8,12 213:16 214:8 214:21 222:1 225:19 227:21 231:7
asking 14:12,22 56:8 61:7 73:20 125:21 190:16 191:9 207:22 231:6
aspect 138:13
asserted 224:16 225:12
assessment 98:5
assume 96:9 135:12 199:4 202:22 203:1,8 227:22
assuming 41:4 136:10,11 165:9
assumption 132:14 133:16 133:20 135:8 136:4,5 172:8 228:11
assumptions 132:17
assurances 212:13
atmospheric 70:5
attached 37:2,5 184:11,16 245:12
attempt 142:22
Attested 243:17
attorney 4:2 243:15
attorneys 4:6 19:3,6 48:7
authored 21:20
authors 107:7,14
automatically 156:19
automotive 33:1
avoid 36:3
avoids 156:22
aware 6:20 7:1 12:17 20:4 21:12 142:17 238:10,13,14
awareness 7:2 22:1
awful 71:9

B

B 92:7
bachelor's 79:20 79:21 80:9,19 81:8 231:17
back 17:15 26:2 31:15,20 35:2 42:10 49:6 50:2 51:20 52:21 56:19 58:13 72:7 73:16 84:12 88:15 90:5 96:3 100:4 113:8 114:9 115:20 117:4 119:7 128:2 134:3 144:4,6 151:22 160:1,8 164:22 177:8,9 179:18,22 180:7 198:16 200:20 209:13 220:13 227:16
background 32:5 49:12 53:6 70:19 116:13 207:6 233:5
bad 136:8
Bader 198:18 199:2,2,3 204:16,18,21 205:3 206:5,6 207:3 208:6 212:19,22
bag 29:1,1
ball 31:22
barely 211:22
base 160:21
based 22:7,8 61:14,19 68:19 94:12 96:14 122:20 160:17 207:19 223:7 233:5
basic 132:17
basically 27:4 67:2 69:9 112:4 125:9 168:17 170:3 187:16 204:20 210:13
basis 126:1 150:16 172:13 233:21
bathroom 58:7
Bauder 198:19
beam 30:18
bearing 25:22 26:4,8,15,18 31:22 32:1 33:5
bearings 24:19 24:21 26:6,9 29:14
beat 101:10
beginning 153:17 220:14
begins 202:10
begun 185:11
belief 137:15
believe 6:8,19 8:7 15:20 16:7 18:7 19:15 21:2 22:15 23:6 48:9 59:7 68:9,9 80:6 90:19 100:14 103:5 104:20 108:1 112:10 115:9 116:9 130:22 133:9 144:12 144:15 149:6 151:18 158:6 158:16 160:4 161:22 196:6 200:15 205:7 207:7 216:22 218:5 220:20 221:15 222:11 224:8 225:1 226:21 230:17 230:22 232:20
believing 126:1
bellows 93:20 94:7,19 96:7
belonging 241:6
belt 138:14 228:14
belt-like 217:22
belts 28:9
benefit 123:10

216:6 236:14
benefiting 190:20
benefits 148:1 214:4,12 234:7 236:2,5 237:11
best 71:15,17 83:18 84:7,15
better 33:20 198:8 221:21 232:5 234:1,5,6 234:22 235:1,2 235:11,17 236:3,3,5,6,7,8 237:13
beyond 72:21 190:9 196:6
big 25:6 27:5,17 28:4,6,8 35:5 37:15 38:15,15 70:8,17 88:13 89:5 98:10 108:3,3 124:18 131:8 146:14 146:17 147:10 148:9 152:2,12 163:6 165:4 173:4,15,19 175:20 178:15 181:16 231:21
bigger 64:5 128:4 147:13,20 152:9 160:11 164:1,4 167:10 167:18 168:19 181:11,12 183:11 198:6
binary 68:16,20 69:10,14,15,18 70:14 72:20,21 106:6,22 108:13
bit 27:12,20 29:1 29:3 37:20 38:14 39:2,3 59:18 68:16 71:5,20 82:15 94:10 101:17 116:14 124:3 128:7 131:14 140:15 151:6 163:11 164:2 168:2 169:17 171:18 182:19 192:9 193:22 202:18,18 203:20,20 205:21 222:15 224:2 231:17 231:21
Black 155:6
blade 201:8 211:8,14 212:2 212:5,15 213:3
block 173:7
board 1:2 4:21 18:17 23:3 33:1 80:7 82:2 90:5 104:15 136:18 232:21 238:15 241:21 242:2
bodily 189:3
body 10:5
bold 168:12
bolt 226:12
book 105:4 110:10,11,13 110:19
borders 233:12
bother 110:10
bottom 99:21 110:8 118:20 119:4 137:20 158:7 161:8,12 165:20 166:3 177:3 205:6 207:8,10,20 217:20
bounce 72:7 202:18 203:19
bouncing 34:21
bound 217:22
bounding 45:8
box 26:22 70:5,9 103:3 179:15 179:16 180:2 183:16 245:10
boy 104:4 136:8 186:10
brackets 155:8
brain 93:10
brake 120:20,22 121:5,10 122:10,16 123:4,7 124:12 124:16 131:3 138:4 145:6,16 145:22 146:3,8 146:15,16,19 150:15 157:9 190:9 208:18 209:2,10,14,20 209:20 241:6
braked 119:10 156:18
brakes 32:1 148:2 209:18
braking 76:21 77:20 157:1,13 180:10,11,13 180:18 181:2 181:14 185:4 185:19
break 14:19,20 30:18 38:1 58:7 58:15 78:1 113:3 118:13 124:7 158:19 219:13 234:3 241:3
break's 158:21
breaking 76:9 118:21 157:15 178:19
brief 46:21 54:11 55:1,5 56:15 58:2,3
briefing 18:8
briefings 18:10
briefs 6:16
bring 13:6 14:7 177:6 227:4
bringing 13:22
brought 54:14 55:13 57:15 66:1 115:22
brown 28:22
Bryer 115:9,18 115:21 116:1,4 116:8,10 123:3
budget 73:13 171:8 192:20 193:13,15 231:11,15,21
buffer 27:14,21 28:2,5,6,8,17 29:22 36:4,8,13 36:16 37:20,21 38:2,7,16,18 59:12,17 60:1,9 60:19 61:20 62:12,17,20 63:2,16,19 64:18 65:13,14 65:15 88:20 100:22 112:3 115:15 118:3 122:1,2 138:22 139:7,9,17 140:6,18,20 141:14,16 143:16 152:16 152:20,21 153:2,3,11,15 153:19 154:12 154:13 156:7 160:2,3,5,18,22 160:22 161:13 161:14,15 162:1,2,3,17 163:14,17,19 163:19 165:1,2 165:3 166:11 166:12,13,15 166:16,20,21 166:22 167:2,3 167:13 168:6,6 168:16,17 169:7 170:11 170:22 171:5 171:21 172:7,8 172:12 174:5 179:17 187:20 188:10 189:3 191:21,21 206:16,19,21 210:1
buffering 202:19 203:1,20 205:8 206:11,17
buffers 28:2 36:11 60:8 65:15,17,18,21 154:11,12 161:16 162:3
build 191:20
built 87:15 133:18 135:10 137:17
bulk 11:14,16 19:12
bullet 224:13 225:4,6
bullets 105:8
bunch 26:11 31:2 226:12
bunches 78:9
bunching 78:6,15
burden 50:22 51:14
business 197:20
businessmen 90:6,8
busy 12:6 81:22
buy 173:8 183:17

C

c/o 244:1
cage 26:12
calculation 185:22
calculations 73:17,22 169:12 183:1 187:8
calibrated 95:11
call 41:14 43:20

53:20 88:18 98:16 157:14 180:16 200:4 206:21 217:3 244:17
called 4:21 18:1 93:20 106:17 109:19 142:19 145:7 166:11 166:12,13,15 166:16 202:14 203:22 205:10 217:20
calling 70:20 198:7 200:22
calls 18:2 205:11
canceled 13:16
Canina 19:8,9
capabilities 33:2 34:1
capability 12:19 76:21 86:8 202:19 203:1 203:21 205:8 206:11
capacitance 180:16
capacity 161:15 162:2
Captioner 243:4
capture 221:11
car 234:22,22 235:3 236:1,2
care 89:10,11 148:9,19,20 149:6,22 150:7 150:12 151:7
career 81:6
careful 34:19 57:1,7 180:1 196:10
carried 228:13
case 1:8 6:18 7:5 12:8 24:11 29:18 38:13 52:19 74:19 86:12 131:10 211:3 216:20 218:6 220:19 237:6 244:4 245:4 246:8
cases 8:8,17,19 18:19 238:7
catalog 198:9
catalogs 197:2
catch 196:16
catenary 142:20 143:1,4,9,21 177:2
cause 36:1,2 138:18
causing 126:4,5
caution 199:8
cautious 57:16
caveats 71:13
centimeter 236:17
central 31:6
certain 13:7 87:16 112:17 169:22 193:9 196:16 233:13
certainly 17:4 24:18 28:4,6 30:20 31:19 33:1 34:12,22 36:19 53:2 69:10 70:12 71:10 72:10,16 74:19 80:19 81:11 98:21 106:12 109:4 118:17 120:13 130:6 140:15 173:16 177:19 206:6 223:19
certainty 22:16
CERTIFICATE 243:1
Certified 243:3,3
certify 243:7,11 243:14,16
cetera 8:13,14 11:6,7 28:10,10 101:1,1 178:2,3 178:3 189:10 189:10 230:1,2
CFS 23:17
challenge 51:9
challenged 50:1 51:15 87:16 214:18 222:5 228:1
challenger 9:3
chamber 67:2,3 68:11 84:22,22 99:2 177:15,16 178:2,8,10,12 182:8,9,13 184:11 186:7 194:8 196:1,7
chambers 85:20 85:22
change 46:1 97:8 97:9,11,15,19 98:15 99:6 107:2 131:19 138:1 156:20 179:2 182:5,11 192:1 201:9,10 209:7 226:13 246:11
changes 45:19 46:3 64:17 95:5 107:2 182:4,15 245:12
changing 95:4 97:14 112:14
chapter 105:12 106:16 107:7
characteristics 115:12
characterize 157:7
characterizing 10:1
charge 90:6,9 186:9,10
cheaper 101:20
cheapest 71:16 71:18 101:13 101:19
check 103:3 245:10
cheese 23:20 24:2 24:11 29:4 33:6 38:13 89:3 112:19 127:20 128:5 129:10 161:3 164:17 168:18,20 173:1,4,7,8,12
chew 11:7
chews 11:8
Chicago 2:7 4:5
chief 105:13
chip 218:14
chips 31:12,13
choose 110:4
chopped 74:8
chose 104:3
Christmas 13:17
circuit 31:8
circuits 31:5
circumstances 209:6
citation 102:11
cite 110:13 127:10 156:21
cited 15:12
citing 239:16
City 6:13
Civil 1:14
claim 44:2 47:3,3 47:12,20 48:3,8 48:11,13,14,18 48:18 50:9,15 51:1,9,15 87:16 169:22 214:17 224:15 225:22 226:1,19,19 228:1 239:9,10 239:10,11 240:20,22 241:10
claimed 39:20 40:10 41:6 42:1 42:13 215:8
claims 43:2,6 44:15 50:1 87:16 92:1 159:16 169:21 170:2 214:18 222:5 226:18 239:7
Claire 21:17
clarification 170:16
clarify 14:17 36:9 69:20,22 136:9 176:8
clarity 131:15
class 198:2
classes 193:6
classic 200:22
clear 21:8 43:16 57:8 61:17 87:8 87:9 111:11 125:20 131:14 135:18 171:9 171:10 208:1 222:16
clearly 40:18 65:18 167:9 231:3
clever 223:3
click 198:22
clock 58:19
clogged 70:10 179:2
close 13:16 30:17 70:5,9 100:13 242:5
closed 94:11
co-pending 19:17
coarse 151:14,20 151:21 152:1,6 152:9,11
coating 111:6
Cognex 235:10
colleague 43:19
Colorado 1:16,19 2:17 243:4,10 244:2
column 84:20

119:5 166:2,4,7 217:13 218:1
columns 166:9
combinable 90:20
combination 40:10 41:4,6,16 42:1,13 53:13 93:13 118:19 141:21,22 202:4 203:15 206:2 210:11 210:14 221:17 222:2,4,4,5,13 231:8,8 232:14 235:10 241:7
combinations 40:6 41:1,20 42:21 49:2,19 76:5 119:7 133:8 134:16 149:9 159:12 222:20,20 223:8
combine 88:3
combined 94:7 133:5,6 141:11 231:10 239:14
combining 50:7 135:14
come 11:11 23:7 43:4 50:3 114:9 143:16 147:22 185:17 226:16 228:12 229:2 232:10 234:13 244:9
comes 26:17 33:21 40:18 111:8 150:19 182:9 223:15
comfortable 45:14 83:8 84:5 214:15
coming 57:10 75:19 94:13 96:18 106:15 126:22 211:16 226:3
comma 103:22
comment 19:1 20:20 40:6 42:4 44:14 51:6 76:6 126:14 135:14 141:12,19 159:11 180:7 214:22 221:5
commented 50:7
commenting 22:9 40:15
comments 128:8
committee 11:4,6
communications 8:12
company 22:20
compare 85:16 86:1 140:6 235:22
compared 85:16 141:14 143:10
comparison 71:7 86:2 87:1 140:10,13
compatible 88:12
complete 244:8 245:11,13
completely 16:5 123:15 128:6 169:7
complex 96:20
complexity 187:14
compliance 206:18,18,20 208:4,10
complicated 31:2 73:20 143:20
Complies 155:10 158:13
components 56:20 121:14 124:5 171:18 197:8
comport 87:4
composite 187:2
compression 78:10 115:3
comprised 10:6
comprises 160:2 241:5
computer 31:16 31:18,20 97:4 198:5
computer's 97:5
computer-aided 243:12
concept 130:19 134:5
concepts 40:15 133:6 140:3 170:4
concerned 91:7
conclude 123:9
conclusion 43:4 143:16 147:22 233:10 239:19
condition 45:20 46:1
conditions 46:4
cone 26:10,11
confidence 22:13
configurations 194:15
confirm 155:11 185:17 230:9
confirmation 65:3
conflicting 56:5
confusing 65:7
conjunction 201:19
connect 180:3 183:16
connection 4:20
connections 177:6 196:11 196:14,15
consent 244:22
consider 13:4 62:16 90:15 188:1 189:8,13 214:17
consideration 180:6
considerations 220:20,21
considered 19:16 86:10 208:9 214:11 222:12 241:21 242:2
considering 137:15 229:14
consistency 34:3 34:9
consistent 238:4
consisting 243:13
constant 155:21 193:19
constraints 11:10
construct 48:8
construction 47:3,21 48:4
consult 61:4
consultant 241:15
consulting 9:22 11:18
consumption 157:3,4
contact 45:6,8,10 45:22,22 46:2,6 68:15,17 69:6,7 69:8,10,11 95:21 96:3,15 97:3,21,21 98:17 99:7 103:22 105:22 106:17 107:8 107:19,20,22 109:17 110:4 110:22 111:9 111:12,13,15 111:16,22 112:1,12,14,17 149:3 187:16 187:17 241:5
contacted 108:9
contacting 67:19 67:20,21 68:7 68:12,13,14,18 68:20 69:9 71:11 72:19 96:19,19 97:7 97:13,16,22 98:2,9,22 99:22 100:2,20,22 101:4,7 102:1,4 103:5,12,19 105:21,22 106:13,14 107:10,15,21 108:2,6,7,8,11 108:22 109:4 110:1,9,21 111:5,8,11 112:5,16 169:14
contacts 45:10
content 34:17 54:1
contents 3:1 93:15
context 53:18,18 54:3 55:10 64:20 98:21 109:15,16 231:5
continue 77:17 135:17 209:3
continuously 98:15 118:2
contracts 93:21
contradicts 110:16
control 27:8,11 31:6 33:3,11 84:20 93:2 95:15,16 116:5 124:12,14 127:1 148:1 151:15,15 200:10,11 201:1,3,18,18 201:21 203:13 204:18 205:13

205:13,14 206:1,16,16 207:1,14 208:5 208:6 209:15 213:22 214:5 214:12 216:20 216:21 234:6,6 235:13,15,16 235:21 236:6 236:13 237:14 237:20 238:2
controlled 31:5,9 31:12,13,16 33:6 38:18 129:18 206:1
controller 31:10 94:14
controlling 178:19 203:12 203:14 204:19 205:12,15 210:7,11
convention 89:1
Conversations 15:13
conversion 97:3
converted 92:22
converter 93:14
converting 72:17 72:20
converts 94:18
conveyor 228:14
convinced 151:7 191:5
cool 12:9
copied 187:9
copies 61:10,11 61:15
copy 15:16,19 25:5 60:22 61:2 61:8 64:10 67:7 129:10,11,13 155:3 244:10
Copying 244:21
Copyright 244:21
correct 4:22 5:1 5:10 7:22 22:15 32:6 41:7 48:4 52:21 66:6 76:1 77:4,22 79:6 146:5 161:19 162:18 166:18 168:11 208:21 210:8 216:9 230:10,19 232:20 234:7 242:3,4 245:10 245:13
correction 97:12
correctly 62:22 177:2
corresponding 240:13
cost 101:12 123:21 124:6 196:22 197:1,3 197:8,13 198:3 199:13 235:19 237:7
cost-effective 184:7
cost-prohibitive 199:9
costs 137:1 233:16
counsel 4:7 14:13 58:15 243:15 244:11,14
count 107:8
counter-opinion 87:17
counts 223:17
couple 6:12 16:21,22 60:8 79:20 80:4 115:1 175:17 207:22 220:17 231:17
course 11:1 14:15 15:11 16:20 19:2 58:21 91:6 102:22 103:13 111:15 131:20 154:18 158:3 164:10 183:10 196:10 212:7
courses 10:19,20 10:20
Court 6:6,10,17 8:21,22 19:17 20:5 22:3
cover 77:2 83:1,1 205:1,1 211:17 228:7
covered 45:9 70:10 71:2,2,3 71:4 73:7,8 85:1 95:21 98:16 99:1,7 183:6,10 194:11
covering 24:20 97:7,13
CRC 1:18 243:18
create 178:21
creating 97:19
credible 239:12
critical 140:1
cross-section 176:21
CRR 1:18 243:18
crumbling 132:5
crumple 115:4 124:17 132:10
cubed 178:13
cuff 44:8
cup 26:16,19,20 26:21
curious 64:3 205:5
curly 155:8
current 6:17 12:20 85:2
customer 235:20
cut 27:19 29:10 52:15 56:22 62:13 173:4 187:4 211:8,13 212:2,5,9 213:3
cuts 227:10
cutter 77:11 117:3,13 121:4 121:8,9,10,17 121:19,21,22 122:3,12,17 123:4,7
cutting 44:21 52:1,4,5,5,9,11 52:12,13,14 53:5 56:21 57:1 57:3,5 60:2,10 60:20 61:21 113:15,19 114:12 117:15 119:10 124:22 145:1,8,16 152:22 156:21 201:8 212:14 224:1 227:9 228:4 229:11
cycles 129:14

D

D.C 1:21 245:2 246:3
dancer 28:9,16 38:19,20 66:4 138:14,14 143:11 155:18 163:22 165:6 177:9
dancers 39:5,5 153:12
dashed 85:6
date 211:21 244:4 245:5,17 245:22 246:10 246:22
dates 212:20
day 12:6 19:12 61:16 160:1 174:13 237:19
days 12:1,2 24:19
deal 167:16
dealing 128:13 152:3 167:9
deals 152:2 167:3
decelerated 121:21
decelerating 77:9
deceleration 115:11 120:14 120:16 121:2 145:1 152:18 153:22 208:20 209:4
decelerations 29:9,12 130:1
December 1:17 211:22 243:10 243:17 244:4 245:5 246:10
decision 18:17 238:15 239:1
decisions 238:6
declaration 3:13 5:6 15:9,17,19 16:6,11,14 18:6 43:10 45:12,16 49:4 58:22 78:22 80:3 170:15,18 235:9 241:12
decouples 38:3
decrease 180:11 180:11
decreases 181:8
defer 23:15
deferential 46:4
define 68:20 79:14
defined 82:2
defining 44:17,19
definitely 9:20 17:6 71:17,17
definition 21:8,9 39:1 66:10 80:8 81:14 99:7 152:5 167:4 230:11
definitionally 98:13
definitions 53:21 57:9 222:15

deflect 204:1 205:19
deflection 95:11 200:5,7 202:16 202:17 203:10 203:11,19 204:1 205:11 205:18,18 206:14 208:2,9
deflects 95:10
degree 22:16 79:20,21 80:9 80:19 112:14 118:8 232:15
delay 145:7 188:10 189:2 202:19,20 203:17,17 206:6,8
deliberately 157:2
delightful 113:12
Delivering 217:21
delivery 217:20
demonstrated 125:5
Denver 1:16 2:17 243:9 244:2
department 11:5 12:5 13:2,4 25:15
depend 190:12
depending 99:12
depends 31:17 34:11 71:4 94:17 120:10 120:12,12 165:9 173:3 177:11 178:14 198:4
depicted 138:2
depleted 112:4
deploy 113:19
DePoi 18:2 59:5 76:18 77:2 119:20 120:1 120:15,20,22 121:4,7 123:6 123:13 125:21 138:5,6,17 146:14 147:2,5 162:13 163:4 171:11 184:21 185:1,4 186:8 208:18 209:2 209:10
DePoi's 140:7,19 147:21
deponent 244:5,9 244:11
depositing 229:2
deposition 1:10 1:14 8:1 9:16 14:10 15:8 17:3 17:8 19:21 20:5 20:8,10 58:19 58:22 242:18 243:5,7,8 244:4 244:14 245:5,8 246:10
depositions 20:18
derivative 114:4 120:11
derived 85:4
describe 9:21 32:4,15 33:13 39:20 46:21 84:8,16 170:10 206:7
described 66:22 72:18 86:13 96:15 132:12 136:2 142:19 163:20 234:2
describes 85:9 127:8 133:11 151:21 163:18 168:5 220:1,1,8 220:8
describing 28:1 82:8 130:1 157:17,22 158:15
description 133:11 135:10 220:9,11
design 10:20 12:18 33:8 39:4 69:17 72:6 74:8 95:18 122:20 167:14 189:12 192:21 206:22
designation 240:21
designations 158:7 165:21 166:6,10
designed 123:3,6 130:13 146:3 167:16 178:8 178:13
designers 21:1
designs 62:20 167:6
desired 33:11
detail 223:2 239:8
details 7:8 31:4 60:14 84:5 91:14,16 102:8 107:5 134:9 203:9
detect 108:17 182:3
detectable 182:14,14 183:5,6 194:11
detected 107:14 107:16
detecting 45:18 74:17,20 75:7 75:13,22 84:8 84:16 97:9,11 97:15,18 98:14 99:6 101:16 106:3
detection 75:15
detects 85:12
determination 207:19 236:6 238:15
determine 48:17 52:19 127:22 132:6,8 186:5 187:8 197:2,16 204:8,16 208:8 210:2,6
determined 149:5
determining 20:11 45:17 111:15
develop 83:3
developing 207:5
development 241:14
deviations 89:12 89:13
device 44:10 45:17,18 66:5 84:20 105:7 145:7 156:21 195:9 215:7 216:7,8,9 241:1
devices 105:14 106:17 110:4,5
diagnostics 33:17
dichotomy 108:12,14
difference 32:11 45:21 109:9 147:19 160:16 219:3 224:3,4
differences 218:6
different 14:21 15:11,14 16:17 17:6 23:2 36:11 53:13,20 56:7 57:9,12,13 62:20 63:9 65:5 65:6 69:22 73:13 80:4 85:21 102:12 115:11,15 119:13,15 123:15 128:6 135:15,19 144:9,19 167:6 170:4 172:3 187:12 189:12 189:15 194:14 201:20 208:1
differential 45:19 45:20 85:19 86:6 181:5,7 183:11 194:16
difficult 62:21
difficulties 188:18
dig 145:11
digital 1:20 69:15 93:14 97:2,4 243:19 244:20 244:21 245:1 246:1
DiNorcia 2:22 4:10
direction 70:21 142:15 183:3
directions 69:22
directly 13:10 27:21
disagree 40:19 40:20 53:15 87:20 125:9 137:6 165:15 190:7 221:4 227:1 239:19 240:5
disagreed 179:7
disagreement 82:1
disclaiming 128:15
disclose 68:7 122:10,16,19 134:7 194:2
disclosed 18:6 125:21 134:4 135:8 136:6 159:8
discloses 144:22 148:3 207:5 212:14 215:7

217:2,16
disclosure 157:8
disclosures 59:6 130:16 131:1
Discontinuous 118:6
discontinuously 118:2
discourage 102:18
discuss 53:12 55:12 58:14 83:10 88:10 183:21 184:22 217:8
discussed 56:1 57:14 101:9 154:19 155:9 183:20
discusses 88:4 240:19
discussing 68:4,5 85:12 184:20
discussion 55:2 59:22 96:5 111:19 128:6 199:22
discussions 13:14 57:1
dispensing 27:5
disputed 125:17
distance 169:11 169:11
distinction 224:2
distinguish 16:9
District 6:6,10,17 8:21,22 19:17 20:5 22:3
divider 107:4
doctrine 221:12 224:9
document 18:5 56:18 63:7 64:15 67:1 76:20 84:11 85:15 100:8 116:3,6 117:7 117:11 120:18 133:17 158:4 170:20 175:12 175:16 176:7 176:15 184:19 188:12 205:17 211:17 217:21 220:2,16 221:1 221:10 224:20 225:9 227:17 229:20 239:3 240:13,17
documents 18:18 18:18 62:3,4,6 80:5
doing 12:17 13:1 14:4 33:18 34:14 38:10,17 39:7 43:4 66:17 77:14 86:8 101:15 103:1 111:3 142:16 192:14 200:10 215:2 223:4
dollar 71:10 101:12
dollars 235:19
doubt 73:9 87:6 110:12 168:11
downstream 37:10 161:13
downtime 237:7
Dr 8:2 21:17 57:17 58:13 84:14 111:20
drafted 82:2 105:12
draw 143:11 155:8 157:20 158:11
drawing 3:6 90:5 124:21 207:6
drawn 7:11 85:6 160:9 164:7 165:10,13 169:6 172:19 218:11 229:13
drill 180:18
drive 2:6 37:18 120:21 153:8 153:14,15,15 153:17,18 154:1,4 155:13 155:15,15 156:4,5 177:7
driven 176:22,22
driving 37:22 107:11
drop 27:21 114:21
dropped 228:15 228:17
drops 38:12 70:15
duly 4:12
duration 210:12
dynamic 113:15 114:11,19 115:15 145:8 145:16
dynamically 35:9
dynamics 125:5 129:20

E

earlier 19:15 25:18 32:4 59:8 61:9 114:18 135:22 205:7 214:16
early 30:13 229:16
ease 138:22 139:8
easier 37:20 63:8 63:9,13
easiest 66:21
easy 17:21 72:5 81:3 101:21 184:8 190:3 193:8
economical 136:17
economically 88:8 121:15 142:1 191:22
edge 175:1,14,19 176:13
edges 175:10 177:16 179:14 179:15
edited 104:22 105:13
editor 105:13
effect 180:10,11 180:14,19 181:2 185:4
effective 213:21
effects 125:1,4
efficiency 235:1
efforts 215:3
eight 18:18
Einloft-Velte 20:1 21:5
either 6:7,21 7:19 9:3 18:9 22:19 30:4 47:4 92:2 107:3 126:3 136:20 143:11 147:2 152:17 153:6
ejected 108:4,5
electric 95:13 187:21
electrical 8:11 71:11 93:1 196:13
electro-mecha... 33:4
electronic 92:20 93:4,10 198:22
electronically 244:21
element 41:15 160:14 224:22 225:2,11,13,15 226:20 227:2,9 227:14
elements 40:10 41:6,16 42:1,13 65:6,8 87:16 214:17 224:15 225:22 226:22 239:7,9
eliminate 229:4
eliminating 170:22
embarrassed 71:20
Embarrassment 72:1
embodiment 168:16
embodiments 90:16
employed 243:14
empty 169:7
enabled 133:11
enabling 134:12
encompass 12:15
energy 11:5 12:6 25:15 94:18
engage 56:2
engaged 13:19
engaging 81:9
engineer 32:14 80:11,15 81:2,5 81:7 133:15 221:13 241:14
engineering 10:18,19 22:16 75:11 80:10,21 136:17 197:19 225:21 232:17 232:19 233:5,9
engineers 21:1 90:8 192:16,19
English 136:8
enhance 135:20 144:10
enjoy 9:8
enormous 27:9 173:15,19
ensure 209:10 210:8,16
entail 189:1
entrepreneur 241:15
enumerates

239:6
environment 111:7,18
equal 168:17 180:9 181:8 182:13
equals 35:13 38:4
equations 142:20 143:1,4,15
equipment 81:10 89:5 124:5 197:14
equipments 23:3
equivalent 80:9
Erise 2:15 4:8,10 244:1
errata 244:13 245:12 246:6
especially 98:6 123:12 143:13
Esq 2:2,3,4,14
essentially 69:13
estimate 75:15 176:1 197:9
estimating 75:13
estimation 160:21
et 8:13,14 11:6,7 28:10,10 101:1 101:1 178:2,3,3 189:10,10 230:1,2
evacuate 183:9
event 104:5 157:3
Eventually 60:5
everybody 18:2
Evidence 1:20 243:19 244:20 244:21 245:1 246:1
exact 33:7 169:10
exactly 27:19 39:9 108:22 109:1 168:17 169:8 188:13
EXAMINATI... 3:2 4:13
examined 25:4 245:7
Examines 56:18 63:7 64:15 67:1 76:20 84:11 85:15 100:8 116:3,6 117:7 117:11 120:18 158:4 168:9 170:20 175:12 175:16 176:7 176:15 184:19 188:12 205:17 211:17 217:21 220:2,16 221:1 221:10 224:20 225:9 227:17 239:3
example 38:19 40:17 53:16 54:5,7 59:4 66:19 67:6,12 76:17 109:3 110:15 117:2 119:9 127:7 156:20 164:11 227:7 232:12
Excellent 62:18 65:21 158:18 219:11
exception 187:10
excerpt 104:21
exclusively 8:18
excuse 52:9 88:6 163:5 182:7 192:5
exemplars 118:18 193:8
exercise 141:14
exhibit 3:6,9,10 3:11,12,13,18 15:20 64:13 76:18 104:17 104:20 105:4 110:14 116:21 143:7 145:14 168:9 186:15 239:16,17
exhibits 3:5,8 17:2 61:9 199:15
exist 7:20 32:22
existence 225:15 227:2
exit 76:22
exited 209:8,9
exiting 76:9 77:21 118:11
expand 89:21 171:9,13 231:15
expanding 94:21
expands 93:20
expect 74:3 126:2 126:6,11,17 131:22 201:7
expectation 188:15 199:12 230:11,18,20 231:9 232:7 239:15
expected 155:12
expecting 96:2
expense 90:1 99:4 183:22 184:2 197:12
expensive 71:9 97:1,2 98:11 125:14,22 138:18 197:9
experience 33:13 59:9 79:21,22 80:11,14 81:9 126:3 193:9 231:18,19,20 241:13
experiences 25:10,18
experiments 124:20 125:6,8 125:16 127:21 128:1
expert 8:5,7 10:2 10:6,11 15:10 16:5 17:9 18:21 18:21 21:12,19 40:6,14,16 47:13 48:20 84:1 86:14 139:16 207:6 216:19 239:13
expert's 15:12 19:19 40:5
expertise 68:20
experts 17:5 20:20 21:15 22:2 86:17 87:3
experts' 17:5
explain 146:22 221:20 232:13
explained 72:19 202:3
explains 156:13 156:18 239:7
explanation 57:18 228:2
exploration 99:15
exploring 102:15 223:13
express 244:22
expresses 162:1
extent 42:17 235:15
extra 91:20 235:20,20
eyes 93:9,12,13 94:6

F

F 35:3,13 38:4 88:22
face 19:22 207:15
faced 188:19
fact 8:5 34:2 105:22 113:18 125:15 126:16 143:22 144:4,7 144:9 147:14 162:12 163:3 171:9 177:21 185:7
fails 232:13
fair 9:22 10:21 12:12,14 31:13 36:6 65:15 74:2 119:20 133:16 157:7 174:2,3 177:5 179:19 209:12 211:2
fairly 29:13,13 141:7
false 70:15
fan 176:5 179:3 184:15 196:12 198:3,4,5,6 200:15,16 206:2
fans 189:11
far 57:17 114:21 219:4 222:21 223:20 232:1
Farr 2:5 4:2,6
farther 177:10
fast 35:18 37:3 73:12
faster 35:18,19 73:9 180:22 183:11 200:18 200:19 201:9 235:2
fatigue 196:16
favorites 9:11
feasible 88:8,8,11 89:6
feature 166:10 166:12,13 217:10,19 218:7,8
fed 29:10 169:6
Federal 1:13
feed 27:7 97:3 217:13
feedback 205:15 205:16
feeder 121:10
feeding 77:10
feeds 121:9

198:7 233:4,16
feet 174:10,11,18 174:21
Fessler 59:5
festoons 153:12
field 33:14 80:10 80:13,17 81:13 81:19
fight 157:17
figure 33:22 62:9 63:8,14,22 77:1 128:18 145:11 145:12 146:10 153:6 154:13 155:1 157:22 162:21 175:18 176:21 190:3 194:6 199:17 199:19,21 200:1,1,6 202:10 211:15 211:18 228:8,9 228:10,21
figures 63:10 118:12,12 146:11 164:5,7 165:9 176:16 187:5,6 239:8
file 43:11 211:21
filed 16:5
filter 218:19
final 156:4
financially 190:15 191:4
find 29:4 44:2 54:20 100:13 130:17 131:22 158:5
fine 5:15 14:15 15:3 28:15 37:19 82:4 126:10 127:18 128:14 149:12 149:20 150:13 150:17 152:11 155:19 156:6 158:19 206:21 212:16 223:5 227:4 236:2
finely 33:5
finer 151:15 152:6,7
finish 14:22
first 4:12 45:21 70:22 82:15 119:4 147:3 154:3,12 161:9 161:13 186:21 195:22 240:1 240:11 241:18
fit 87:13 89:20 123:21 125:12 125:22 130:7 138:12 147:11 148:9,16 149:11 171:11 172:4 173:16 178:1,4 179:16 201:15,22 202:1,1 204:3 233:14,17
fits 204:5
fitting 163:10
five 37:1 91:20 194:7 242:6
flimsy 29:7
flip 99:17
floating 57:9
flop 66:8 127:10 127:17,20 129:4,6
flopping 129:9 129:11,17,21 137:16,19 138:2,5
flops 144:12
flow 45:20 46:1,1 46:4 67:4 68:11 124:18
flowing 117:13
fluid 180:16 189:16 190:11
flutter 127:10,17 127:20 128:9 129:4,7
fluttering 129:9 129:17,21 137:16,20 138:2,5
flutters 144:13
focus 10:3 33:16 42:20 43:9,15 43:21 45:16 54:12 55:14 58:4 59:18 83:7 116:13,14 117:5,21 118:17,18 119:16 126:15 206:5 212:4 238:21
focused 18:21 41:20 47:7 49:20 212:5 220:3 226:5,8
focusing 7:16 67:18 224:21 229:12
folks 13:1 106:8 123:2,6
following 215:5
follows 4:12
food 1:6 5:17,20 12:11,14,21,22 13:11,19,22 14:5 24:12,14 29:17 33:3 52:12,15 80:12 80:15 81:5,10 81:15 198:15 198:15 199:6 211:4,8,12,16 212:2,4,11,14 213:3,9 218:16 227:10 228:5 228:12,17,19 229:1,15,21,22 230:2,4,6 243:20 244:4 245:4 246:8
foot 174:5,8
forbidden 244:21
force 35:13 36:20 38:4,6,8 76:9 77:20 142:18 181:8 185:19 200:12,14
foregoing 243:13 245:7
foreign 212:20
forget 186:13
form 10:8 20:14 26:7 30:6 36:7 38:21 39:22 40:12 41:9,17 42:3,19 43:7 44:5,12,20 46:8 46:14 47:6 48:19 49:17 50:11,17,20 51:3,6,10,12,17 51:19 52:10,16 53:9 55:7,20 57:20,21 59:15 60:7,11,21 61:22 63:3,17 65:22 67:15 69:19 72:3 73:1 74:18 76:11 82:13 83:5,16 84:10,18 85:14 87:18 90:15 94:19 95:22 96:16 97:17 98:19 99:10 101:18 103:10 103:16 108:18 110:6,17 112:6 114:22 117:18 118:14 121:6 122:5,13,18 123:11 126:7 128:19 130:18 131:5,13 132:2 133:21 134:14 135:11 136:7 137:10,18 139:19 140:21 141:6 143:18 146:20 148:4 150:9 157:10 159:9 160:7,20 164:8 167:1 171:7 172:1,9 174:20 175:3 175:15 177:18 183:7 188:8 189:5,18 192:2 199:20 201:11 203:4,6 210:10 213:13 214:20 215:5 218:13 219:5 220:6 221:18 225:3 225:16 226:7 229:17 233:1 234:16 238:17 239:21 243:12
Formax 23:8
formed 45:18 46:10 137:15 219:9
forth 7:22 9:1 10:22 11:12 12:1,6,15,19 13:9,22 14:9 17:22 22:11 24:22 25:8,22 27:20 28:9,19 29:14 30:3,22 31:18 32:14 33:2 34:12,17 35:9 37:19 39:11 40:3,15 48:5 53:18,21 54:22 55:10 56:6 57:9 58:6 62:3 64:6 65:6 71:8 73:19 85:22 86:17 87:13,22 89:16 94:4 95:2 106:14 111:8 111:17,18 115:6 118:5

119:14 121:9 123:14 124:18 126:9,12,16 128:10 129:12 131:9 139:14 141:10 142:9 143:3 144:1 160:12 162:11 162:13 163:4 163:22 165:19 171:11 174:7 175:20 176:14 176:16,18 177:7 178:20 179:22 181:17 182:20 183:13 185:22 187:15 188:2 189:9,11 190:15 192:7 193:12 196:16 197:8 198:5 203:8 204:3 206:15 209:6 209:18 213:18 217:5 218:15 221:2 223:1 226:20 227:20 228:3 229:3,8 231:15 233:12 240:3
forward 14:1 40:7 41:2 42:22 49:2 121:16 149:15 159:12 167:7 236:19 244:13
found 48:14 101:13 102:6 102:10
foundation 73:1 84:10 117:18 123:11 133:21 164:8 177:18 213:13 218:13 219:5 225:16 238:17 239:21
foundational 233:20
four 18:18 194:7
frankly 148:12 189:21
frequency 113:20
Freyer 59:5
friction 157:2,12 157:13,14,18 157:21 158:8,9 158:12,14 203:16 241:4
front 15:16 39:14 62:6 63:11 86:4 116:22
fuel 235:1
Fukuchi 59:5 215:6 216:20 217:15,19 218:7,18
full 4:16,17 100:8
full-contact 96:5
fun 9:10
function 82:12 135:9 144:19 164:2
functioning 141:1 171:22
functions 82:16 82:20 94:12
funny 186:17
further 102:18 161:14 241:11 242:12 243:16
fusion 193:16,19

G

G-e-a 18:1 23:11 23:12
Gallagher 2:5 4:2,6
gallon 236:10,11
gas 236:3,8,9
gauge 93:6
GEA 17:14 18:1 18:2 23:11 145:6,15,20,22 146:6,7,15 147:2,4 176:10 176:11 185:12 185:15,19 186:8 188:10 188:13 198:21 198:22 199:4 199:16 202:8 204:8 207:4,9 211:12 212:21
Gea's 189:2
GEA438 59:5 144:22 198:14 199:6 207:17 209:15 241:7
Geea 23:12
geeky 198:1
Geiya 23:12
general 8:15 33:21 52:17 53:10 55:21 56:3,12 86:5 103:2 203:11
generalities 54:10
generally 177:15 214:4 229:14
generating 144:1 183:11 185:14 200:11 203:16
generation 118:22
generators 197:3
Georgia 10:18 12:13,22 24:16
German 199:4
Germans 23:14
getting 25:19 39:2 67:5 70:18 91:20 98:12 112:17 166:7 177:14 191:14 212:5 230:14
gigabytes 91:21
give 10:11 13:15 33:4,6,11 35:20 37:6 39:8 44:8 46:18,21 48:22 55:17 61:8,14 63:6 107:6 131:9 148:16 151:9 169:17 178:5,17 180:15 193:2,9 197:17 202:18 203:20 212:13 214:1 223:9,10 226:14 232:5 233:16 237:14
given 21:7 53:22 86:14,17 87:3 140:14 151:5 168:1 179:3 206:20 209:5 220:18 245:11 245:13
giving 14:13 15:5 49:16,22 235:11
glad 65:9
glasses 168:10
gloss 174:1
GmbH 1:6 5:17 244:4 245:4 246:8
go 17:15,21 26:22 27:16 49:6 50:2 50:12 51:20 52:21 54:19 55:8 56:12,15 56:19 59:20 60:4,14 62:2 63:4 67:18 69:21 70:21 71:3,22 73:16 83:21 84:4 85:8 88:15 96:11 100:4 111:9 112:19 115:3,7 115:20 116:7 117:4,19,20 118:15 119:7 119:12,14,17 123:1 128:2 132:16 141:13 142:7,15 144:4 147:18 148:17 151:22 154:21 156:5 158:5 160:8 165:12 168:14 179:22 180:22 181:13 184:8 190:4 193:3,22 194:10 198:9 198:16 204:20 210:17 226:9 227:16 228:2 230:8,14,15 235:3,5
goal 34:3
God 155:16
goes 26:16 34:20 93:1,10 100:15 108:5 126:13 153:14 156:16 171:1 200:14 202:12,14 218:15
going 11:16 13:17 31:3 34:13,19 35:1 37:3 38:6,9,14 45:16 46:15 55:17 57:2 60:22 61:3,8,13 67:3,4 71:2,6,8 71:19 73:7,8 84:12 89:4 94:13 96:3,17 96:22 97:1,20 101:16 103:12 104:16 107:19 107:19,20 109:2,3,5,6,10 109:18 110:20 111:6,6,16 118:16,18 124:6,15,17,19 125:5 126:10 127:20 128:9 129:9 130:4 132:5,9,10

137:4 138:1 139:11,15,22 140:1,2 141:2 142:15 147:11 147:12 152:2 153:8,17 154:19,20 155:1 156:6 158:20 161:1 162:12,22 163:1,1,6,8,8,9 163:21,22 164:10 165:1 166:17 167:2 167:10 171:11 173:4,16 175:21 176:17 177:2,4,5,19 178:4,6,11,20 178:22 179:21 180:2,7,10,15 184:8 188:3,6 190:6,12 192:6 192:7 193:11 194:18 195:17 196:11,13,14 197:7,9,11,15 197:17 199:11 199:14 203:11 205:16 208:10 208:10 209:13 222:22 223:3,6 227:17 228:12 228:12,13 229:5 230:21 230:22 234:12 235:5,13,14,15 236:10,11,13 236:14,19,20 237:5,6,14,14 237:15 240:5
good 4:15 9:13 30:7 34:6 64:19 73:21 76:17 97:12 103:1 111:9 132:16 132:16 134:7 134:18 136:18 144:2 156:17 158:17,21 174:9 175:22 190:4 197:20 210:17 212:8 219:14
gosh 27:4 34:10 57:11 100:15 110:20
gotten 31:14
governing 244:15
graduate 192:16 192:18
grant 133:1
granted 133:3
granting 80:7
gravity 142:18
great 49:14 74:20 75:4 86:18 101:8 104:9 116:1 121:14 121:16 125:18 133:14 148:13 170:16 171:15 182:22 185:7 185:21 196:18 202:15 209:18 217:8 232:5 236:18 237:12 237:13
greater 142:4 239:7
green 62:15
grocery 29:1
ground 14:11
grounded 194:1
grounds 58:6
group 1:20 106:17 243:19 244:20,21 245:1 246:1
grouped 106:9
grouping 105:6 107:13
guarantee 110:22
guess 18:1,18 24:7 31:7 36:9 40:1 41:14 47:15 92:6 105:12 107:10 112:13 117:4 145:15 147:19 153:6 173:3 175:19 176:8 177:9 191:2 224:10 229:20 235:22
guide 101:1 112:5,7,7,12,17 172:14,18,19 174:4 196:2,3,7 196:8
guides 180:4
guy 12:22
guys 104:1

H

half 9:6,6 174:8,8 180:19
hand 25:1 76:17 104:16 116:19 127:14 128:17 145:13 184:8 195:18 238:22
handbook 3:18 104:22 108:14 110:3
handing 76:19
handling 24:15 25:10,20,21 26:1 33:14,15 33:16,18 34:9 59:1,6,10 69:2 75:8 195:9 213:5 214:5,11
Hang 161:10
hanging 142:18
happen 24:22 115:1 126:6 187:19
happening 155:18
happens 138:9
happy 39:3 49:8 49:14 53:13 54:14 56:2,15 59:21 60:16 62:4 76:14 88:10 97:5 197:15
hard 9:10 27:15 37:4 163:10 186:11
harder 35:12,16 35:19
Harn 2:4 4:5
Hart 2:14 4:8,8 10:8 19:8 20:14 26:7 30:6 36:7 38:21 39:22 40:12 41:9,17 42:3,19 43:7 44:5,12 46:8,14 47:6 48:19 49:17 50:11,17 51:3,10,17 52:10,16 53:9 55:7,20 57:20 58:7 59:15 60:7 60:11,21 61:6 61:17,22 63:3 63:17 64:11 67:15 69:19 72:3 73:1 74:5 74:18 76:11 82:13 83:5,16 84:10,18 85:14 87:18 95:22 96:16 97:17 98:19 99:10 101:18 103:10 103:16 108:18 110:6,17 112:6 113:1 114:22 117:18 118:14 121:6 122:5,13 122:18 123:11 126:7 128:19 130:18 131:5 131:13 132:2 133:21 134:14 135:11 136:7 137:10,18 139:19 140:21 141:6 143:18 146:20 148:4 150:9 157:10 158:21 159:9 160:7,20 164:8 167:1 170:15 171:7 172:1,9 174:20 175:3 175:15 177:18 183:7 188:8 189:5,18 192:2 199:20 201:11 203:4,6 206:12 210:10 213:13 214:20 218:13 219:5,14 220:6 221:18,22 222:8 225:3,16 226:7 229:17 233:1 234:16 238:17 239:21 242:14,17
head 13:5 80:1 92:11 116:18 159:18 198:9
heading 92:6
headings 17:19
hear 32:13 99:12 171:19
heard 22:20 199:1
hearing 199:1
heavy 27:6
height 89:14 178:11
height-wise 176:19
held 1:15 26:12 131:12 139:17 143:9,10,16 153:11
help 13:6 67:8 132:21 135:20 210:8

helpful 158:6
helps 138:4 209:10
Henry 2:2 4:1
hesitate 244:17
hey 71:19 106:12 110:1 164:22 184:4 192:19 225:22
high 24:2,22 29:8 29:9,12 35:2 36:2 37:9,11,14 38:5 39:1,4 60:5,13 93:21 109:6 113:20 114:2,6,10,10 114:11,19,19 115:5 118:8 120:7,10,13,16 122:11 124:21 126:5,16 130:1 131:12,17 132:9 139:4 141:9 144:13 144:22 145:8 145:16 152:17 153:22 154:5 167:10
high-accelerati... 59:13,17
high-capacity 165:6
high-inertia 37:9 38:3,19 39:10
high-level 89:14
high-precision 32:5,22 33:5
high-speed 13:8 13:11 23:19 24:3 38:11 113:21 129:15
higher 29:17 63:20 95:9 117:16,16 139:14 140:7 140:19 141:16 142:13 200:14
highlighted 62:15
highlighting 189:20
hinder 196:2
hindsight 222:9
hired 21:12 227:6
hires 21:1
history 43:12
hitting 81:13
hold 36:3 195:18
holds 88:20 89:2
hole 71:3 73:18
holes 70:6,10,22 71:1 95:20 97:7 97:13 98:15 99:7 178:15,20 179:1 180:3,18 180:21 181:4 181:10,11,12 182:11,15 183:6,9,16 194:7,10,18
hone 45:3
hope 113:10,11 179:6 181:17
Hopefully 34:6
hour 12:5 14:20 19:14 29:14 112:21 235:4,4 235:5
hours 11:21 12:5 16:18,19,19
hthomas@wilk... 2:9
huge 11:7,8
huh 211:22
huh-uh 22:4
Humidity 34:18
hundred 65:11 82:14 137:1
hypothetical 193:21

I

i.e 54:4
ID 239:9,16
idea 46:13 75:21 86:16 96:11 108:6 133:12 148:17 153:5 171:16 187:14 188:14 189:12 197:5
ideas 189:20
identical 15:18 16:5
identified 40:20 75:6 88:18 90:20 225:7
identify 108:9 224:15
ignore 110:3
Illinois 2:7
immediately 92:6
impact 180:13 182:4,17 195:8 195:13,14 210:19
impacts 195:15
impart 146:8
impediment 241:10
implement 33:7 101:12,22 199:12 223:1
implementation 91:14,17
imply 118:6
important 34:9 46:17 62:1 64:21 75:18 83:22 135:17 197:18 213:11 233:18
impressive 81:21
improve 34:1,2,3 126:18 137:4,4 223:16 226:11 226:15 235:13 235:14,15 236:20
improved 131:3 150:14 234:5 234:11
improvement 150:19 213:20 234:9,10,12,15 234:18 235:7,8 235:21 236:13 237:3
improvements 213:5,8,12 234:18
improving 34:9 150:21
inch 174:12 178:8,13
inches 169:2,3 173:2,9,17,17 173:17 174:8,9 179:5
include 153:19 206:9
included 105:13 134:22 190:10
including 11:3 144:9 157:2 244:21
incompatible 167:13
inconsistent 22:6
incorporate 189:2
incorporated 4:4 187:20
incorporating 96:7
incorrect 227:13
increase 35:21 36:5 180:9,10
increased 201:8
increases 241:4
increasing 181:7 181:10
independent 227:22 239:7 240:20
independently 59:9 186:5
index 169:17
indicating 105:9 158:10
indication 164:21
individual 209:19
induction 108:17
industrial 23:19 213:8 237:2
industry 12:11 59:9 197:12,19
inertia 27:10 39:1,2,4,5 77:16 120:16 154:5 167:4,10 201:4
inertial 37:14 120:2
inexpensive 101:21
infinite 231:11 231:14
influence 46:5
information 20:11 21:7 33:19 39:12 49:12 62:5 68:17 73:16 85:4 86:4 91:13 134:8 140:15 151:10 170:6 185:9 223:6 230:14 231:2
infringer 9:4
infringing 6:21
inherently 142:4 142:12
initial 4:17 18:10 18:12
injection 161:17 168:7
inner 30:2
innovation 75:21 76:3
input 12:18 70:1
insert 26:5 104:11 121:12 128:3 132:20

146:12 161:6 167:19,20 171:17 190:22 201:14 202:6 209:19
inserted 98:7 233:22
inserting 88:16 88:16 89:17 136:20 150:2,2 150:20 160:13 171:2 183:15
insertion 189:14
inserts 136:14
install 104:13
instance 53:1 169:16 200:3
instances 66:19
institute 13:3 238:16 242:3
institution 18:17 80:7 238:6,14 239:1
instruct 48:7
instruction 47:20 47:21,22 134:20 178:18
instructs 14:13
integral 210:13 210:13
integrate 14:8 59:22 177:8 186:4 202:2
integrated 31:5,7
integrating 170:4 177:9
integration 14:6 170:6
intellectual 10:3
inter 3:15 4:22 26:10
interconnection 8:12
interested 111:21 149:19 243:15
interesting 40:8
interleaf 29:4 89:1,2,2,14 108:3 112:18 113:20 121:19 122:8 124:15 127:19 130:12 130:12 149:2,2 152:4,8,8 156:18 161:2 162:5,14,16 163:21 167:17 168:18 169:2 173:1 176:2,4 211:9,12 227:12
interleave 24:21 52:12 88:20,21
interleaver 7:3,8 137:8 156:20 157:4 158:5,9 158:16 161:16 161:17 162:4 168:6,7 176:17 176:19 187:12 192:21 198:15 199:6 204:8 207:9 212:9,9 212:15 228:4 228:16 235:11 236:5
interleavers 7:6 7:12,15,16,19 187:11
interleaves 26:5 29:16
interleaving 24:3 24:8,14 32:1 211:4
International 24:16
interpret 20:12 108:13
interpretation 109:11 164:4
interpreting 47:11
introduce 4:7
invalid 48:11
invalidity 22:2
invention 39:20 133:11 170:10 226:2
inventions 20:8 59:14
inventor 20:11 198:20
inventors 20:2,4 20:18 75:20
inverted 228:14
investigation 102:18
investment 197:16
involved 5:2
involvement 22:18
involving 6:7
IP 2:15 4:8,10 244:1
IPR 5:3,3 8:20,22 16:1,3,4 22:19 58:17 80:6,7 116:21
IPR2024-00258 1:8
IPRs 5:16 18:9 87:3
isolate 27:17 154:9
isolated 152:21 153:2 155:22 156:8
isolates 115:10
isolating 37:8
issuance 43:12
issue 53:2,3 68:18 114:18 121:12 129:22 130:5,13 141:3 142:8 148:18 177:3,4 183:15 232:16,17 241:22 242:2
issues 35:6 126:3 127:14,16 128:17 130:9 131:2 135:9 137:7,16 138:18 149:7 154:10 183:19
it'll 37:7 61:15 228:15
italics 174:3
ITC 8:22
Item 138:14

J

Jason 1:18 243:2 243:18
jerk 114:5,6,6,10 117:16 120:7
JM 243:21
job 10:17 40:5 48:21 50:3 76:3 82:17 87:11 125:7,8 126:10 127:4 128:18 133:7 135:3 136:13 137:20 140:10 141:11 150:6 151:4 159:10 186:2 204:2,7,9 221:3 226:9,17
Jobin 40:20 41:19,19 43:18 43:19 54:14 83:7 86:11 87:14 88:3,15 90:19 91:8,11 118:19 119:8 125:9 126:13 127:3,4,8 128:2 128:2,21 129:5 131:7 132:19 133:5 135:4,13 136:13 137:21 138:1 140:11 141:10 144:6 147:15 148:5 148:14 149:9 150:2 151:2 160:12 161:5 164:22 165:15 165:16 166:17 167:7,19 171:16 172:5 172:11 173:14 173:18 174:15 177:22 179:6 181:17 183:20 185:10,22 186:12 188:15 196:18 197:6 199:13 204:4,9 212:6 221:3 226:8,22 227:12 234:4,4 236:4 237:10 241:12
Jobin's 42:5 43:21 44:14 47:8 48:21 49:18,22 51:5 53:3,12 76:4 82:17 116:15 117:22 126:21 127:10 134:16 141:20 143:3 159:11 170:3 171:1 204:16 214:22 223:22 225:21 227:8 230:21 235:9 238:21
jobs 21:16
John 104:22
join 13:18
Joining 4:4
Jordan 18:2 52:21 59:4 60:9 60:19 61:12,20 61:20 62:9,12 62:14 65:13 216:21 217:2 217:10,12 218:8 220:1,4 220:11 227:8,9 227:13 228:6,6 228:8,11 229:5

229:11,13,19 229:19
jouts 114:8
judges 232:22
justified 191:22

K

Kansas 6:13
keep 15:4 22:7 43:9,15,19,20 81:22 111:7 141:7 146:3 154:20 155:1 158:20 180:4 198:21 199:1
Kennon 2:3 4:5
key 84:2 160:11 160:15 178:11 193:13 199:11
kind 9:6 28:22 123:1 156:16 166:13 198:4 208:11 220:7
know 5:12,21 7:10 8:3,12,20 11:10,22 12:1,8 13:7 14:17,21 15:10 16:10,15 16:18 17:21 18:22 19:14 20:15,19 21:15 21:16 22:7,10 23:1 24:11 26:14 28:3,6,8 28:19 29:11,11 29:13 30:7 31:8 32:19 33:17 34:10 35:8,15 36:10,16,21 37:15 38:22 39:1 40:2,4 43:14,15 46:17 46:17 48:20,22 49:5 50:3,4,5,6 53:1,19,19 54:1 54:21 55:2,3,9 56:16,22 57:14 58:4,5 59:16 63:19,20 64:9 64:16,20 65:11 65:17 66:6 68:19 70:20 73:5,5,12 74:12 74:16,22 76:2,4 76:13 77:13,13 83:8,8,13,21,21 84:3,4 85:19,21 86:2,7,16,19 87:5,9,9 88:12 88:13,16 92:8 92:10,11,18,21 93:1 94:8 96:8 96:20,21 98:21 99:12 101:9,9 101:15 102:6,7 103:11,22 104:1,9 106:3 109:2,16,19 111:2,7 112:21 116:14 117:20 118:15 119:7 119:12 120:9 120:10,12 121:7 123:12 123:14 125:11 125:18 126:9 126:12,21 129:4,8,13 130:3,5,8,9,20 133:4,5,18 134:2,9,17 136:10,13,16 136:22 137:11 139:13,20,21 143:2,3,6,19 144:7,17 147:2 150:5,12,14,20 150:22 151:4 153:12 157:11 157:15 159:15 159:18 160:8 160:14 164:2,6 164:13,21 165:6 167:3 169:8,10 170:1 170:1,9,12 171:15,16,16 171:20 172:11 172:22 173:3,5 173:5,7,10 174:6,16 175:22 176:5 176:13,18 177:16,19,20 177:22 178:14 179:1,2,20 180:17 182:18 182:19 183:12 185:20 187:11 187:12 188:14 188:20,20 189:11,19 190:14,14,14 192:13 193:4,5 193:8 194:13 195:20 197:4 197:20 198:6 198:12 199:5 199:10 200:4 200:12,13 201:14,14,15 201:22 202:2,3 203:7,8,14,22 204:2,12,13 206:8,9,15,22 208:3,11,21 210:12 211:11 213:15 217:4 218:16 219:6 223:4,14,18 225:19,22 226:10,15 227:20 229:15 230:2 232:4 233:13,14,14 233:16,21 234:11 235:2,6 235:7,16 236:10,14,17 237:2,3,7,21 238:20,20 240:2,3,3,4,10 240:11,12
knowing 39:8 48:18 142:10
knowledge 7:18 233:9
known 59:13 65:15,20 66:9 66:12,14,17 75:10,10 76:10 77:19 114:18 154:4 211:7
Krohnert 59:5 116:17,19
Krohnert's 117:1
Kurfess 1:10,14 3:6,14 4:11,18 8:2 57:17 58:13 84:14 243:6 244:1,5 245:5 246:9
kwales@wilkie... 2:10

L

L.L.C 245:1
label 158:12
Laboratory 12:7
labs 193:6,16
lacked 238:11
lacking 148:15
lacks 73:1,2 84:10 117:18 123:11 133:21 133:22 145:20 177:18 219:5
laid 88:9
large 13:20 29:13 38:5,6 75:16 89:12 128:22 128:22 130:6 138:10,12,13 142:4,9 144:16 149:22 151:1 152:15 159:7 162:22 163:5,8 166:18 167:3 208:5
large-loop 160:13
larger 131:8 138:6 142:13 149:12 150:3 162:18 167:13 182:13 189:9
Lasalle 2:6
late 25:13
latitudinal 179:15
law 8:16 104:3 134:21,22 164:7 232:21
laws 94:12
lawyer 41:14 133:14 134:15 219:7 221:2 225:18 232:18 233:2
lawyers 15:13 47:14
laying 49:11
lead 183:5
leads 170:19 186:19
leaf 122:8
leave 47:14
leaves 121:19
leaving 78:2 153:8 201:10
left 77:3 91:14,16 117:14 140:16 145:4 154:13 177:10 181:19 210:3,6
legal 8:8 47:11,13 47:17,19 48:3 48:20 133:14 134:2,3 219:7 220:13 221:7 221:12 225:19 227:19 230:9 230:11 232:16
legalese 224:1
legally 164:6
leisure 154:18
length 66:13,15

69:3,4 100:18 100:19,20 103:17,19 106:14 108:21 112:18 138:9 152:13 168:18 177:3 179:15 194:4 202:22 234:6 236:6
length-wise 172:18
let's 12:20 17:13 17:15 24:18 31:20 36:17 38:12 56:19 57:6 60:14 62:3 67:16 71:7 90:21 111:14 119:20 121:7 124:3 137:1 158:1 176:5 185:1 190:3,3 193:22 205:10 217:18 222:15 236:8
level 33:14 60:5 60:13 95:11 151:14,15,21 152:1,6,6,7,9
levels 39:11 95:4 126:16,18 142:9
lever 94:22 152:3
Lexan 106:2
liability 8:17
life 37:20
light 30:17,18
lights 108:16
liked 237:10
limit 109:3,3,5
limitations 240:22 241:2
limiting 141:3 228:1
limits 72:11
line 84:20 85:6 100:9,14 110:8 119:2 137:20 161:8,9 168:13 184:12,14,16 189:16 190:11 207:10 246:11
linearly 107:3
lines 50:13 84:4 119:4 163:15 163:16 197:14
list 158:7 165:20 166:6,10
listed 17:19 20:2 106:11 110:3,5
literalism 133:18
litigation 9:22 10:6,12 11:18 13:12,13 22:18 22:19 231:5 243:15
little 27:12,20 29:1,3 37:20 38:14 39:2 71:19 81:12 82:15 94:22 95:8 101:17 114:21 131:14 137:2 146:18 163:11 168:2 169:16 171:12 171:17 178:2 180:18 184:9 193:22 194:17 202:18,18 203:20,20 205:21 212:7 219:12 231:17
live 6:13
LLC 246:1
LLP 2:5
load 120:2,16
located 44:21 184:11
location 148:6,7
logic 31:9
long 16:13 19:10 28:18 100:8,16 109:18 116:2,8 128:11,11 172:14,17 174:5,10,11,12 175:21 176:4 193:13 194:18
longer 112:11 172:8
longitudinal 175:10,13,18 177:16 179:14
look 12:1 17:8,22 20:20 24:1 32:21 33:22 34:15 38:22 40:1,5,13 41:19 42:5,7 44:7 45:2,13 48:21 49:6,18 50:2,3 51:4,5,11,18 52:22 53:17 55:9,9 56:13 58:5 60:15 62:3 62:14 64:5,16 66:21 76:4,5 82:5,16,17,18 83:20 85:17 86:2 87:10,12 87:19 89:7 92:4 93:7 96:10 100:4,5 102:19 102:21 103:2 105:19 108:19 108:19 109:15 110:8 115:20 117:5,6 119:15 119:20 123:9 124:8 125:8 126:8,11 134:4 134:16 135:3,4 135:13 136:10 136:13 137:12 137:21 139:21 140:10 141:11 144:5,5,21 147:10 151:11 152:1 154:15 156:11 158:1 158:18 159:4 159:10,17,20 160:9 164:1,9 164:11,12 170:14,17 172:2 174:14 174:15 175:5 175:17,18 176:2,20,20 179:12,21 184:18 186:2 188:17,22 189:4,7,20 194:14,22 197:2,6 198:5,9 198:16 199:17 199:21 200:6 200:20 202:12 204:9 208:3,13 208:15 212:9 212:20 213:19 219:20 220:19 225:20 226:17 227:16,21 228:6 230:14 230:15 232:11 232:18 233:21 237:8
looked 7:4 17:4,5 43:1 66:3 76:2 87:21,21 91:1 170:3,3 197:7 221:2 226:18 240:2,4
looking 9:12 28:12,22 34:16 63:15 65:2,19 67:16 77:1 89:18 94:6 105:20 107:21 116:22 130:21 131:1 132:18 139:16 141:9 146:10 150:1 161:2,4,7 162:19,21 163:7,7 164:20 194:2 198:21 200:9 202:20 203:9 216:16 223:10 224:17 225:4 228:7 232:18,22 236:9
looks 26:10 70:4 71:5 77:5 101:2 105:2 117:12 117:13 164:17 194:6,16
loop 29:22 44:16 44:19,20,20 45:8,9,18,18 46:5,7 54:8,9 54:13,16,18,20 55:5,18 56:6 57:3,4 62:15,16 63:20 65:22 66:4,6,7,11,11 66:13,16 67:3,5 67:9,11,14,20 68:2,4,8 69:4,5 70:4,8,17 74:17 74:21 75:8,16 75:22 76:10,22 77:10,17,21 78:2 82:11,16 82:20 83:4 84:9 84:16 85:3,3,3 85:6,13 88:18 89:12 95:4 100:18,19,21 103:18,19 104:7,9 108:1,1 108:21 112:3 112:11 114:15 114:20 116:5 117:2,12 118:11 119:9 119:11 121:5 122:3,4,7,11,16 123:5,8 124:11 124:21 126:4,5 127:9,13,15 128:16 130:2

131:2,4,8,12,22 138:3,6,7,10,10 138:12,13 139:10 140:7 141:15,17 142:3,5,9,9,12 142:13,17,18 142:22 143:9 143:10 144:16 144:18 145:20 146:6,7,14,15 146:17,18 147:11,20,20 147:20,21 148:19,22,22 149:1,5,11,13 149:22 150:1,3 150:7,12 151:1 151:2 152:14 152:14,15 156:7 157:1 159:8,16 160:10,13,22 161:1,14 162:20,22 163:1,5 166:13 166:16 169:3 169:22 170:11 177:1 187:16 191:17 192:14 194:3 195:8 199:19 200:8 200:10,20,21 200:21,22 201:16 205:6 205:14,15,15 205:18 207:8 207:17 208:4,5 208:5,6,6,9 209:4,8,11 210:1,2,3,5,6,8 210:9,20,21 234:6,7 235:13 235:15,16 236:6,12,16 237:13,20 238:2 241:3,5
loop-like 192:22
looped 206:10 207:20
loops 57:13 66:9
loose 36:17 66:7 66:9,10,13 67:8 67:14 68:8 69:5 70:4 75:8,22 76:9 114:15 117:2 122:2,11 122:16 123:4,8 127:9 208:6
lot 8:10 10:19 11:2 12:18 13:7 23:2 24:15,15 27:10 31:3,19 33:1,15 35:4 37:5 38:8 39:12 39:12 53:19 71:9 90:1 91:16 97:1 104:10 123:21 129:11 138:18 144:17 167:17,20 180:5 193:12 199:22 211:3 216:16 223:8 227:19
lots 71:13 81:19 85:21 104:11 182:18
love 104:1 237:22
loved 181:21
low 39:2,5 78:19 93:20 126:4 127:9 131:12 131:17 132:8 139:3,11,18,22 141:5,9 143:10 143:17 144:12
low-cost 193:8
low-frequency 89:12
low-inertia 38:20
low-tension 36:4 36:8 37:8
lower 29:18 37:21 140:8,19 141:17 142:13 161:15 162:2
lowest 202:9
lunch 112:22 113:10,11

M

M 1:21 245:1 246:2
ma 35:3,13 38:4
machine 10:22 21:1 25:1,2 26:4 27:1,5 28:2 29:8,20 30:15 31:2,6 32:1 33:8 34:5 34:13 74:12 89:11,21 90:4 90:10,11 102:21 106:13 111:5 126:8,9 130:13,15,21 132:11 133:18 133:20 135:20 136:1 138:19 147:13 156:9 201:20 213:21 231:15 235:17
machines 7:12,14 7:21 23:3 24:4 24:15 25:3,6,7 28:12 30:9 31:12,13,16,19 33:16,22 59:10 129:12,13 214:6,11
magazine 217:3 217:14
magnitude 28:14 99:4 174:17 182:5 234:21
main 42:20 43:15 58:4
maintain 90:10 90:11 114:14 115:19 121:1 123:22 124:1,6 183:19 190:16 208:19
maintenance 138:19 184:2,2 237:7
making 34:16 38:10 68:15 74:4 111:13 112:1 121:19 136:5 167:13 181:11,12 216:7 231:10
management 14:3,7
manager 197:13
manifold 184:21 184:21 185:3 186:7
manner 82:3 85:5 135:15 215:7
manufacturing 10:20,21 12:13 13:21 32:6,16 34:4 213:19
maps 240:21 241:2
margins 232:11
marked 3:8 64:13 104:17 145:14
mass 35:13 38:4 38:5 109:6
material 15:11 19:20 26:1 30:19 34:13,22 35:1 36:13 37:17 44:4,10 44:11,17,20,21 46:5 53:7,8,16 54:2,4,5 56:20 57:4,5 65:22 76:9 85:1,3,5 107:14,16 124:19 128:10 131:11 138:22 145:3 146:4 160:3 161:16 162:4 169:3,5 169:15 200:14 201:9 209:7 210:16 211:4 216:7 217:16 217:22 218:6 218:10,15 219:3 229:3 240:22 241:3,4 241:6
materials 6:16 16:17 18:6 19:16 139:8
math 39:7
mathematical 142:11
matter 4:4 9:16 9:17 15:20,22 109:10 179:16 181:3 209:20 244:8
maximum 85:6 171:21
Meadors 1:18 243:2,18
mean 5:12,21 7:14 9:7 12:16 17:20 24:5 34:16 35:16,18 40:1 48:18 54:9 54:18 55:6,8 62:5 63:5 69:1 69:8 71:12 72:6 81:7 85:17 88:11 93:5 94:2 94:17 95:6,7 99:3 101:8,11 102:17,19 105:8 113:15 115:1 118:9 119:13 124:3 124:13 127:5 127:18 132:11 133:15 136:12 139:5,6,7 140:5 148:21 152:19

155:19 162:19 164:11 165:11 165:13 168:15 169:14 171:14 172:10 176:14 181:22,22 182:18 192:9 196:9 198:8 202:12 207:16 209:17 213:18 218:14 220:3 220:12 223:14 224:21 225:14 229:20 230:5 232:4 235:1 237:17 238:19 240:1,10
meaning 43:6 53:11 55:17
means 32:16 84:21 96:9 103:5 112:18 172:5 183:12
meant 46:13 55:18
measurable 182:10
measure 46:7 84:3 85:2 95:10 104:6,9
measured 149:2 173:11
measurement 32:10
measurements 33:9,10
measuring 68:1 69:3,3
meat 23:20 24:2 24:11 29:4 33:6
mechanical 8:10 8:11,14 10:18 10:19 73:9 80:9 80:21 241:14
mechanically 88:8,11 115:10 142:1 171:14
mechanisms 115:10
meet 41:6 74:11 87:15 99:7 185:9
meeting 19:11
meetings 19:14
meets 185:8
membrane 95:9 95:10
memory 62:2 91:21 100:13
mention 70:22 84:21 89:15 186:3 225:2
mentioned 25:22 79:11 179:14 220:4 226:5
mentioning 225:15
mesh's 147:20
met 21:9,17 50:22 51:14
metaphorically 72:10
meteorology 32:6 32:10
meter 236:16
metric 234:11 236:20 237:4
metrics 237:4
metrology 32:7,8 32:9,16,17,18
micron 236:17
mid-to-late 26:3 30:12
middle 4:17 115:8 156:12
mile 236:10
mileage 236:3,9,9
miles 235:4,4,5 236:10
military 237:2
millimeter 237:19 238:1
mind 145:10
minimum 177:17 177:20,21 179:5 185:3,8,9 185:18 186:6
minus 169:10
minuses 195:20
minute 29:14,16
missing 18:4 40:10 41:15,15 42:1,13 48:5
Missouri 6:14
misspoke 191:13
mix 8:20
model 142:22
modification 74:4,15
modifications 94:14
modified 236:5
modify 170:22 171:5 172:12
moment 15:1 47:15 154:22 199:15
money 123:21 137:3 235:20
monitor 66:15 103:21
monitored 100:20,21 101:3 103:18 103:20 108:21
monitoring 66:13
months 13:19
morning 4:15
motion 120:3 208:8,11
motions 6:17
motivated 40:21
motivation 191:6 192:1 224:6
motivations 40:20 88:3 98:12
motor 36:14 37:18 73:19 176:22,22 177:1 182:19
move 14:1 35:18 37:17 107:3 124:4 138:22 139:8,10 149:15 196:9 200:18,19 205:20 207:21 236:19
movement 152:18 196:3
moves 35:19 205:9 206:10 207:8 208:2
moving 29:15 94:21 107:12 113:18,22 124:16 155:18
Muller 17:14 18:1 59:4 60:1 60:4,8 65:13 67:6,7,9,12,13 67:20 68:2 74:22 75:2 88:15 89:10,11 90:22 98:8 99:22 100:2,5,6 101:3 102:3,9 102:14 103:4 104:11,12,14 107:21 108:11 110:1 121:13 121:17 122:9 122:15 123:9 123:16,17,19 123:19 124:13 126:2 129:1 130:8,15,19 131:1 133:2 135:8,10 136:6 136:21 137:6 138:5,15 142:18 146:12 146:17 147:3,8 148:2,19 149:22 150:7 150:11,13,16 150:21 151:17 151:21 152:16 153:7 155:4 156:13,18,21 156:22 157:8 157:21 160:5 160:14 161:8 162:1,8,10,17 163:13,18 164:13 165:21 165:22 167:12 167:15 168:5 169:22 170:10 170:15 172:7 172:15 188:11 190:10 191:10 191:12 192:6 196:2 201:16 202:7 209:20 212:1,14,17 223:11,17 233:20,22 239:8,15 241:1 241:7
Muller's 68:4 101:13 112:3 124:11,21 126:22 127:13 127:15 128:16 131:11,22 135:20 137:17 139:17 140:6 140:18 141:14 141:16 142:2 142:22 143:16 144:10,13 149:19 150:13 160:2 167:14 171:21 174:5 187:5 189:3 191:11,21 192:21 209:22 210:8
multiple 56:6 71:1 85:20 135:16 176:3

N

name 4:16,17,18

43:17 91:9 186:11 245:5 246:9
name's 4:1
named 43:20
names 192:4
nanometer 236:17
napkin 186:16,17
National 12:7
nature 167:14 218:17
Navy 11:6 12:5
nearly 100:22
necessary 143:2 148:8 224:14
need 14:20 16:9 16:10 39:11 64:3 67:22 72:8 73:12,12,17 89:7,22 107:16 122:20 123:19 124:12,16 125:2 128:1,3 136:19 139:10 140:9 143:15 144:19 146:19 148:8,10,15 154:22 156:19 156:22 170:22 184:17 194:10 199:15 230:3 233:15 235:3 238:1,2
needed 33:9 88:6 123:20 161:17 162:4,5 168:6
needs 74:11 113:15 114:11 114:19 115:15 129:17
negative 119:1 185:14 189:15 190:10 195:16
never 199:3,5 235:5
new 236:2
Newton 35:3
nice 37:19 113:10 113:11 184:9
nicer 145:12
Nina 19:7
nip 77:15 78:6
nipped 77:6
nipping 77:6,8
Nispel 20:2 21:5
no-contact 69:11
nominally 88:19 163:13 181:15
non-contacting 110:20
noncontact 105:7 105:14,17 106:9 107:17 110:5
noncontacting 106:11 107:20
nonlawyer 221:13
nontouching 106:4
nontrivial 188:2
normally 152:19 160:9 162:20
North 2:6
Nos 3:16
NOTARY 245:22
noted 245:12
notes 15:14,14
Notice 1:13
noticing 244:14
noting 244:14
nuclear 11:4 12:9
number 5:7,8 6:18 11:1,20 34:10 59:1 90:2 100:9 127:2 154:7 158:6,17 179:4 181:3 200:3,4,16 202:15 205:12 206:2 237:12 240:21
numbers 39:8 66:22 166:8 174:13 183:1 237:11,12
numeral 168:12
numerical 97:21
NW 1:21 245:1 246:2

O

Oak 25:15
Object 10:8 20:14 26:7 30:6 36:7 38:21 39:22 40:12 41:9,17 42:3,19 43:7 44:5,12 46:8,14 47:6 48:19 49:17 50:11,17 51:3 51:10,17 52:10 52:16 53:9 55:7 55:20 57:20 59:15 60:7,11 60:21 61:22 63:3,17 67:15 69:19 72:3 73:1 74:18 76:11 82:13 83:5,16 84:10,18 85:14 87:18 95:22 96:16 97:17 98:19 99:10 101:18 103:10 103:16 108:18 110:6,17 112:6 114:22 117:18 118:14 121:6 122:13,18 123:11 126:7 128:19 130:18 131:5,13 132:2 133:21 134:14 135:11 136:7 137:10,18 139:19 140:21 141:6 146:20 148:4 150:9 157:10 159:9 160:7,20 171:7 172:1,9 174:20 175:3,15 177:18 183:7 188:8 189:5,18 192:2 199:20 201:11 203:4,6 210:10 213:13 214:20 218:13 219:5 220:6 221:18 225:3 225:16 226:7 229:17 233:1 234:16 238:17 239:21
objection 122:5 143:18 164:8 167:1 206:12 221:21
objections 74:5
obvious 48:12 50:1 184:6
obviousness 49:4 49:6,9,13,16
occurs 121:22
offer 215:11 218:5 221:15 222:11 231:6
offered 216:19 230:17
office 1:1 4:5,21 132:15 133:10 244:9,17
oh 10:15 11:19 13:13 17:13 18:8 23:12 25:2 27:4 29:19 31:22 34:10 67:16,18 72:16 100:15 102:21 104:4 110:9,20 113:2 124:2 164:3 166:7 169:8 191:18 194:9 212:22 213:7 223:14 228:8 242:13
oil 24:20,21 26:5 26:18 27:6
okay 5:4 6:9,20 7:7,18 8:16 11:21 12:22 14:3,8 16:4 17:18 25:9 26:4 28:1,11 30:4,14 31:11 32:19 33:13 37:18 41:12 42:17 44:9,16 45:6 46:20 51:7 53:7 54:7 58:17 61:17 73:12 75:7 76:8 78:1 81:12,17 83:20 84:11,17 85:11 86:11 87:7 88:2 90:13 91:1,5,18 92:5 93:3,8,19 95:3 100:12 102:13,20 103:4 104:19 108:10 113:21 114:10 115:7 116:3,20 119:22 120:15 122:9 123:1 127:7 128:15 130:22 131:21 132:15 134:20 139:12 142:17 145:11,22 146:6 151:11 154:9,15 155:2 155:11 156:8 156:16 158:4,8 158:22 159:6 160:17 161:12 165:20 169:5 169:12 175:7 175:12 180:2,7 181:2 182:13 182:17 183:3 185:6 191:2

194:5 195:5,22 198:21 201:2 202:8 206:5 209:13 211:2 211:14 212:12 215:4,11 218:2 219:14 221:6 221:10 223:5 224:19 229:22 230:7 232:7,10 232:20 233:4 237:9,13 240:13 242:13
old 24:19
on-off 68:16 69:16
once 8:4 9:18,19 9:20 21:7 41:18 45:2,11 46:9 51:4,11,18 53:17 108:19 117:21 123:12 130:6 132:3 134:15 138:16 139:20 141:21 143:19 145:13 148:5,13 159:17 167:15 171:15 172:2 214:21 225:10 238:19
One's 140:7,7
one-part 216:8
one-zero 69:16
ones 17:11,16,18 66:1 123:2 129:15 133:6
onus 126:17
open 66:7 70:22 110:2 168:20 179:1 199:17
opened 70:6 110:10
opening 110:10
openings 189:16 190:11
opens 110:18
operable 172:7
operated 118:2
operates 201:7 226:14
operating 135:7
operation 131:19 195:21 207:9
operational 138:18
operations 12:15 35:17
opine 19:1 20:21 41:11 47:5,5 49:13 56:14 76:7 82:18 92:3 93:17 133:8 134:17,19 142:6,8 149:17 150:4 151:9 159:11 173:6 177:21 179:9 201:13 207:10 207:13 208:12 213:16 214:9
opined 135:14 170:5
opines 234:4
opining 83:8 119:18
opinion 39:8 41:3 41:11,22 42:12 44:6,8 45:4,15 46:10,18 48:22 49:16,22 50:9 50:15,19,20,21 51:8,12,13 52:7 57:19,21 64:17 74:2 79:2,12 83:13 86:11,14 86:18,18,20,21 86:22 88:2 90:16 92:1 108:10 123:8 126:22 127:15 139:16,20 140:1 141:18 142:3,7 146:7,9 146:16 149:4,8 149:16,21 160:1 163:18 178:5 185:2 191:19 208:7 213:12 215:6 215:10 216:11 216:19 218:5 219:9 222:1 224:5 227:8,12 232:3,6 233:3,5 234:8 240:8
opinions 21:13 22:5,7,8,10,13 41:8,15 49:4 51:6,19 124:11 204:16 215:11 216:9 220:18 220:21 221:15 222:12 230:17 231:6 232:7
opposed 69:14,15 97:21 187:17 235:4
optical 71:7
optimal 114:21
option 244:11,12
options 110:3,4
optoelectronic 73:7
order 28:14,22 46:18 47:4 174:17 185:19 228:21,22
orders 6:17 99:3
ordinarily 98:4 98:14 99:9
ordinary 21:6,11 50:6 72:15,22 74:6 79:4,14 88:7 98:3 108:11 239:13
orient 65:9 117:1
original 244:13
out-of-practice 134:5
outcome 33:12 243:15
outlet 131:3
output 70:2 95:13
outputting 95:20 96:21
outside 13:11,13 93:15
overall 14:2 34:3
overrun 126:4
overruns 157:4
oversee 12:13
overview 46:22 47:17 54:11,17 55:1,5 56:15 58:2,3 63:6
owner 1:7 2:20 4:9 5:21 9:2 18:15,16 242:14
Owner's 3:15

P

P-O-S-I-T-A 195:6
p.m 113:6 159:2 159:2 219:17 219:17 242:9,9 242:18
Pacific 24:17
pack 24:18,19 168:20
packaging 25:22 26:4 27:22 80:12,16 81:11 81:14
packing 29:13 148:11
pad 133:17
page 3:2,5,8 62:8 78:21 99:21,21 100:14,15 105:3,4 115:8 116:22 118:20 120:20 124:8 151:14 156:15 158:7 161:8,9 165:20 166:3,8 166:20 168:3 170:19 175:8 186:20,21,22 187:1 195:3,4 228:7 239:1,2 240:17 244:14 245:4 246:11
pages 46:20 47:16 243:13 245:7
paid 11:2
pair 77:6
paper 7:3,6,8 24:5,12,15,16 24:20,21 25:3,7 25:10,20,21 26:5,18,21 27:2 27:5,6,7,11,15 27:18 28:21,21 29:1,9 32:2 34:14,16,17 35:16,20 36:2,4 36:17,22 37:1 38:8,12 52:11 52:15 53:16 54:4,5 56:21 57:6 62:13,15 77:10,16,21 78:2,6,15 97:6 97:12 108:15 108:17 111:5 111:12 114:20 115:6 118:21 119:10 121:20 124:21 125:3 128:4,9,11,22 129:10 130:16 132:4 139:17 141:3,7 143:22 167:16 168:17 168:20 169:6 180:4,21 181:16 195:16 195:18,19 202:9 203:14 204:20 206:4,7 206:18 207:1

209:8,9 210:2,2 210:4,6,7,9,20 210:21 212:2,5 213:3 214:10 217:13,22 218:15,19,22 228:4,16,20 230:3 237:15 237:19 238:3 240:14,15
papers 18:9 25:8
paradigm 83:15
paragraph 48:2 48:10 49:9 51:20 52:2 54:3 54:9 55:19 56:10 57:18 79:3 82:5,7 92:5 99:17,20 100:6,9,15,16 113:13,14 115:7 118:21 119:21 120:17 120:19 127:7 138:21 144:21 145:19 151:11 151:13 154:15 156:11,12,15 158:12,15,18 159:5,19 170:14,17 175:6,9 176:9 184:18,20 185:13 186:19 188:4,7 194:22 195:4,22 208:13,15 209:13 212:8 219:20 220:15 220:19 221:8 221:11 222:17 224:13,18 227:21 232:12 239:4,20 240:12 241:16
paragraphs 239:17
Pardon 203:5 208:14
parenthetical 81:13
part 26:16 33:4,5 34:7 38:3 58:3 106:13 149:18 175:10 186:9 193:12 197:18 204:15 219:7 225:19 233:18
Partes 3:15 4:22
partially 45:8,9
particular 7:21 21:16 23:4,10 24:11 45:3 49:1 55:11 68:2,22 69:1 74:19 100:21 101:4,6 103:18,21 108:8,22 131:10 137:7 149:18 159:16 226:2 233:6,7 234:14 237:6 238:16 240:9
particularity 232:14,15 238:12 242:2
particularly 23:1 73:21 144:2 170:18 197:5 201:15 222:22
parties 79:19
parts 90:19 124:7 234:4
party 243:15
pass 46:15
paste 187:4,5
pat 104:12
patent 1:1,2,7,9 2:20 3:9,10,11 3:12,14,16 4:8 4:21,21 5:7,8 5:11,21 8:17,19 9:2,3 17:14,14 17:14 18:15,16 25:19 39:15,17 39:21 40:2,3,4 40:11 41:7,22 42:2,12,14,18 43:2,12,13 44:1 45:1 48:11 50:10,12,15 51:2,9,15 56:16 63:11 64:1,1,2 64:4 75:21 79:5 79:9 82:11 83:15 84:8,12 84:15,19 86:3 86:13 92:2 93:16 108:20 119:8 130:19 132:15,16 133:1,3,5,6,9 133:10,19 145:11 146:12 159:16 164:7 165:9 169:21 170:2 206:14 207:11 209:19 224:15 232:21 240:20 241:10 242:14
patent's 134:4
patentability 219:4
patentable 50:10 50:16 51:9
patented 221:17 222:2
patents 5:7,12,14 6:7,22 7:11 15:12 17:6,11 20:1,12 21:14 41:16 43:22 44:14 45:4 46:22 47:4,5 50:1 52:18 54:11,13,18,20 55:10,11,16 56:13,14 57:14 59:14 65:8,8 76:3,13 79:15 82:8,21 83:4 85:20 87:1 115:2 119:16 140:3 159:8 171:3 214:18 215:8
path 35:8 206:7,9
Paul 2:14 4:8
paul.hart@eris... 2:19
pay 235:20
paying 236:18
peek 60:15 217:4 217:6
pen 155:4,6
pennies 71:10
people 10:2 13:18,20,22 32:12 71:20
percent 11:19 65:11 82:14 236:21,21
percentage 11:17 11:17
perfect 146:18 211:2 222:9
perfectly 202:22 205:20
perforation 37:1 37:7
perforations 37:4
perform 6:5 47:3
performance 135:21 142:2 226:15 237:6
period 31:11 74:7 244:15
permeable 45:7 46:2,6 67:2
permitted 58:18 196:8
person 20:12 21:6,10 40:21 43:5 50:5 52:7 69:17 70:12,19 72:12,14,22 74:3,6 75:9 78:18 79:3,12 79:14 80:8 82:2 88:6 91:2 98:5 98:14,16 99:9 102:15 108:10 109:21 110:8 123:8 130:17 131:1,22 133:15 171:5 202:21 207:7 216:6 223:12 229:14 231:7
person's 190:9
personal 214:10
perspective 206:22 232:19
perspectives 135:19
petition 18:13 232:16 233:6 240:8 241:1,12 242:3
petitioner 1:4,15 2:12 4:3 6:2 232:13
petitions 238:11 238:16
Ph.D 1:10,15 3:14 4:11 243:6 244:1,5 245:5 246:9
phenomenon 157:21
phonetic 19:8 114:9
photo-optical 110:9
photoelectric 105:14,17,20 106:1 109:6,10 109:12,19 110:19,21 111:4,14 187:17 192:13
phrases 152:6
physical 7:12 94:3

physically 90:20 125:12 187:20 202:6
physics 94:13 167:4 206:22
pick 9:10
pickiness 53:20
picture 64:5 117:1 160:19 187:2,19 188:4 188:6
pictures 133:19 206:7
piece 24:12 27:18 38:8,12 112:19 125:3 127:19 128:4,5,9 129:10 130:16 161:3 164:16 168:18 172:22 173:4 197:14
pieces 28:20 89:5 128:11,22 167:16
pipe 95:14
place 156:21 212:8 228:22 229:12
plant 197:13
plants 23:22
plate 106:2 185:14,18 186:6 189:17 190:11
play 182:9
PLC 31:9
please 10:9 16:2 16:10 78:12 84:13 100:6 244:7,12,13,16
plenty 23:22
Plexiglas 106:2
plug-and-play 91:19
plugged 182:11 182:15
plus 169:10,11
pluses 195:20
pneumatic 94:11 148:10 184:21
pods 24:13
point 7:16 31:12 36:6 40:8 45:4 45:14 49:7 59:21 61:3 65:14 67:11,22 70:15,16 81:6 84:6 92:21,22 107:22 108:2,2 108:8,9 111:2 111:14,15,22 112:1,17 125:21 135:2 137:11 160:15 167:22 171:1 171:21 176:16 202:10 212:3 216:13 217:7 224:13
pointed 65:14 177:2
pointing 157:8 157:11 158:11
points 214:5,12
poor 221:13
pop 17:16
portion 45:7 46:2 46:6 157:1 170:18 187:4,5 195:8,13 206:9
POSA 70:20 77:13 91:15,17 110:16,18,18 111:10 126:2,5 126:11 136:18 138:19 163:7 164:9 165:19 181:20 184:5 196:6 215:1
POSAs 211:8
POSITA 70:20 195:6
position 35:7 40:9 41:5 47:2 67:13 68:8 74:17,21 75:8 75:22 83:4 84:9 84:16 85:13 104:6 106:16 106:19 111:9 191:17 210:15
positional 35:6
positions 22:1
positive 195:15
possible 36:13 72:4,11 171:5 174:4 191:20 196:17
possibly 71:12
potentiometer 107:1
power 73:18
pre-COVID 25:12
preamble 227:16 229:7 230:1 240:22
preambles 227:22
preceded 43:12
precisely 237:9
precision 32:16 214:2 237:8
preface 218:2
preferably 100:21,22 101:3 102:4 103:18,20 108:21 161:14 161:16,20 162:15,16 166:20
preference 60:13 103:4,15,20 110:1 160:6 162:1,3,8,9 166:21 168:5
preferences 162:11
preferentially 212:10,14
preliminary 18:15 238:10
prepare 15:8
prepared 56:10
preparing 58:21
presence 94:4
present 2:22 12:20
pressure 45:19 45:20,21 46:3 68:10 70:4,5,8 70:9,14,15 78:17,19 84:21 85:19 86:6,6 92:2,9,13,14,15 92:16,17,19 93:3,8,21,21 94:1,9,15,16,21 94:22 95:1,1,4 95:6,8,9,19 96:14,21,22 97:8,10,10,14 97:14,20 98:15 99:6 101:16 119:1 171:2 176:18 179:2 181:5,7 182:4,5 182:11,15 183:11 185:14 189:16 190:10 194:16
pretty 11:9,19 12:9 19:18 21:8 24:22 27:6,11 28:4,20 29:15 37:14 65:10,10 74:9 89:4 91:13 100:13 104:12 107:5 113:20 123:22 136:8 139:11,18 158:17 171:10 179:3 186:17 189:22,22 198:10 218:17 229:4 230:6 241:20
prevent 78:14
prevented 137:8
previous 22:20 22:22 23:21
previously 3:8 104:16 242:2
price 101:17 123:22 124:4
Pricey 124:1
primary 10:17
principles 47:17 47:19 48:3 87:15 95:18 230:9
printed 133:17
printers 25:6,7
printing 129:16
prior 20:13 25:19 29:17 48:12,15 59:13 90:16 134:11,11,13 222:2,5 243:7
priority 212:20
probably 13:14 13:18 14:19 16:15,16,18 19:13 25:11,12 25:12,13 26:2 28:7 31:9 37:3 65:2 66:20 71:9 73:16 81:6,15 84:2 92:22 93:6 106:1 130:8 169:9,11 176:19 177:13 191:13 202:17 203:19 205:19 205:20 219:12 232:10 242:5
problem 64:2 75:10 77:14,19 236:4
Procedure 1:14 244:16
proceeding 4:20 19:17 58:18 76:19 104:18

242:15
proceedings 4:9 5:2,7 6:6,10,18 8:21,21 22:3 64:13 243:11 243:14
process 33:20 37:10 59:13 94:14 197:19 204:15 213:19
processing 12:14 12:19,21 13:8 13:11,19 23:22 29:17 33:3 34:14,15 80:12 80:16 81:5,10 81:15 198:15 211:4 213:9
processors 25:7
product 7:3 8:17 24:6,10 52:12 52:15 156:20 228:5,12,17,20 230:2 241:13
productive 222:18
products 6:21 24:14 218:22
professional 11:15 243:2
professionally 10:11,14
professor 3:13 10:17 11:2
proffered 222:1
profile 152:18
profiles 126:2
programmable 31:9
project 13:5,11 25:16 192:19
projects 12:20 24:16
promise 186:14
pronounce 91:9
Proofer 243:22
properly 126:9
property 10:3
proposal 13:21 14:2
proposed 40:9 41:16 42:1,13 58:6 169:21 170:2 222:4,13 222:21 231:8 232:14 235:10 237:11
proposing 73:11
protecting 111:17
protective 111:6
provide 4:20 12:17 21:13 47:17 53:6 56:4 61:2,12 73:15 78:1,3,5,13 91:12 131:4 185:4 188:16 206:10
provided 46:7 91:11 161:13 172:5 220:21 230:10 233:17
provides 92:18 239:12
Provisur 1:4 4:3 5:17 6:1,2 7:2,8 7:19 22:19 23:5 50:22 51:14 239:6,12 240:21 241:2 243:20 244:4 245:4 246:8
Provisur's 240:20 241:9
prox 109:7,9
proximity 30:16 109:11,12,20
proxy 194:3
publications 59:1
published 133:10
pull 27:14 35:12 35:15,17,18,19 36:18,21 37:3,4 60:3,14,16 74:11 145:13 182:20 183:10
pulled 114:20 185:12
pulling 27:12 35:15 37:13 38:15
pump 183:8
pumps 99:2
punctuation 104:1
purchased 244:10
purpose 38:20 209:14
purposes 80:6
Pursuant 1:13
push 195:19
put 15:14 24:12 26:13,17,18,20 26:21 40:6,15 41:1 42:21 43:22 47:8 49:2 70:13 75:3,5 76:5 83:9 87:11 89:4,7,19,20,22 90:17 98:8 99:1 106:8 107:3 109:22 118:19 119:8 121:16 122:21 123:3,7 123:17,18 124:3 125:13 134:8 135:13 135:18 137:21 138:20 143:5 144:7,8 146:13 146:16 147:5 148:6,10,14 151:8 155:16 155:19 159:12 165:1,4,18 166:17 167:7 168:10 172:11 173:21 174:3 178:1,6 179:4 179:10,12 181:17 182:2 183:13 189:10 190:21 192:3 193:14 204:12 204:14 209:21 219:22 223:15 223:19 226:9 228:18 233:22 235:18
puts 125:18
putting 13:20 24:5 27:2 43:9 75:1 90:21 94:20 107:22 122:22 123:20 125:11 128:3 128:10,21 188:13

Q

qualifications 99:8
quantification 196:21
quantify 11:16 237:11
quantity 29:13
question 42:9,10 46:16 56:11 59:19 62:22 69:21 73:3 76:6 76:7 81:3 83:17 84:13 95:12 99:8,11,13,14 111:13 134:2 134:21 143:20 144:2 145:15 150:10,18,19 175:4 182:7 190:18 191:2 191:16 219:7 221:19,21 222:10 223:15 224:6 225:9 231:21 234:8 235:14 236:22
questionable 74:12
questions 14:12 14:14,16 15:1 57:2 60:18 61:1 61:4 208:1 242:12 244:16 245:11,13
quick 37:6 198:10 217:6
quickly 14:10 29:15 36:14 37:17 65:9 74:9 113:18,22
quite 38:2 46:9 46:12 74:12 82:4 83:20 118:16 175:4 182:6
quote 99:22 115:9 120:1
quotes 151:19
quoting 151:20

R

R 1:10,14 3:13 4:11,17 243:6 244:1,5 245:5 246:9
raceway 26:10
raise 37:22 101:16
RAM 91:21
range 97:21 107:6 131:21
rapid 77:15,16 120:2,7,9,13,15 121:1 208:19 209:4
rapidly 36:19 77:9 121:20 179:3 182:10 182:10,14
rate 29:17
rates 24:22
reach 134:2 149:20 206:8 233:10
reaches 202:9

read 6:16 20:18 21:19 42:9,20 43:11 58:22 82:21 97:2 103:13 154:17 204:21 221:8 230:6 238:6 239:4 245:7
reading 92:18 93:9 119:13 143:2,8 202:21 207:2,4 229:19 241:18 242:16
ready 44:7 76:6 108:4 112:19 119:17 214:8 244:8
real 68:18 73:3 87:8 150:19 184:7 193:7
reality 72:5 93:8 94:10 173:13 179:21 197:11 205:22 232:4 235:6
realize 237:17
realized 118:22
really 9:5,9 10:3 18:21 20:15 29:19 34:3,4 35:19 37:3,16 39:8 40:3,13 43:9,16 44:13 45:11,12 46:9 46:16 54:12,12 55:12 56:1 58:4 59:18 60:12 67:18 73:11 76:2 83:7 86:3 89:18 91:7,12 92:4 100:11 101:11,20,21 102:22 109:14 111:1,2,19 116:7,14 117:4 117:21 125:2 128:18 134:18 135:3 141:9 144:5 148:9 167:5 173:6 174:14 175:22 177:11 186:11 190:2 194:13 194:20 200:9 201:13,22 203:8 205:12 212:4 213:15 213:16 214:7 214:17 226:11 229:4 233:19 234:2 235:3 236:14 240:4 240:10 242:11
Realtime 243:3,4
reask 222:10
reason 87:6 91:2 103:1
reasonable 22:15 230:11,18 231:4,9
reasonably 233:6
reasoning 99:11 99:14
reasons 102:1 144:9 224:11 235:11
recall 7:4,15 9:19 17:2,11 18:19 18:20 19:15 20:7 21:21,22 23:9 28:14,15 29:21,22 30:2 30:14 31:4,22 32:3 43:14 80:1 80:17 96:11 102:7 116:16 135:2 137:15 143:8 163:14 207:16 216:12 217:16,17 218:4,9,20 227:3 230:13 230:13 238:9 238:19
Recess 58:11 113:6 159:2 219:17 242:9
recognize 84:21
recommend 138:20
recommendation 90:4 173:22 179:13
recommendati... 125:10
recommended 179:9,12 186:1
recommending 149:9,15
reconfiguration 189:8
record 4:1,16 35:14 58:10,12 61:18 65:1 113:5,7 135:6 159:1,3 219:16 219:18 242:8 242:10
recorded 245:11 245:14
redesign 147:12 190:19
reduce 34:1 237:15
reduced 243:11
reduction 157:3
redundant 147:5 148:2 216:21
reel 156:18 157:4 158:5,9,10,17
refer 5:11,20 6:1
reference 48:15 60:22 61:1,2,6 61:8 105:16 106:9 115:10 116:17 121:4 133:2 135:9 157:8 158:6 185:12 198:14 199:17 202:8 207:4 209:15 212:1,17,19 215:7 217:15 220:5 221:9,16 222:19,19 223:12 225:1,1 225:12,14,14 227:1,2 229:11
referenced 17:7 244:8
references 61:15 90:17 104:5 135:15 143:8 144:22 213:2 222:6,12 224:16 226:4,6
referred 173:18
referring 6:3 160:1 163:14
refigure 147:12
refined 15:15
reflected 79:4
reflects 65:1
refusing 61:1
regard 240:19
regarding 5:7 21:13 230:18 241:9
regardless 106:8 126:20 127:3
region 44:22 52:1 52:4,5,13,14 53:5 56:21 57:1 57:3,5,6 61:21 75:5 85:3 88:17 117:15 118:3
regions 117:17 118:2 124:22
Registered 243:2
relate 35:4,10 49:4 59:1
related 97:20 243:14
relates 5:6 54:17
relation 6:6
relative 59:17 139:5,10
relatively 70:5,9 77:9 139:3,4 140:18,19 141:4,9,16,17 143:14,17
relevance 73:2 133:22 213:14 225:17 238:18 239:22
relevant 47:17 48:3 92:8 134:21 230:9
relied 19:20
relief 223:21
relying 81:12 147:22
remains 112:11 210:9
remember 7:6,7 27:19 35:2 134:3
remind 183:12
remotely 4:4 184:11
removal 44:9,10 215:7 216:7 241:1
removed 44:20
removing 216:7
Ren 4:5
Ren-How 2:4
repeating 43:15
replace 90:1 98:9 148:7 150:5
replacing 140:2 163:5
report 11:12 12:8 15:13 17:4,6,22 19:1,19 20:20 20:21 21:19 32:4 40:5,9,13 40:19 41:19 42:5,21,22 43:10,21,22 44:14 46:21 47:8,16 48:21 49:1,8,16,18,20 49:20,22 50:8

51:5,6,21 53:3 53:5,12 55:3 56:1,19 58:3 59:19,21 61:5 62:8 63:6 76:4 79:17 82:6,18 83:10 87:10 88:9 92:5 99:18 102:11 113:14 116:9,9,12,15 117:22 119:21 124:8 126:14 126:15,19,21 127:6,11 134:16,22 141:11,12,20 143:3 144:21 145:19 151:12 153:7 154:16 154:18 159:5 159:11 170:3 175:8 184:18 195:1,4 198:11 207:16 208:13 208:16 209:14 214:22 215:9 216:10,12,16 216:18 217:7 218:3,4 219:20 220:14 221:16 223:22 225:21 227:4,6 230:15 230:15,16,19 238:21
Reporter 42:11 47:21 58:10,12 113:5,7 159:1,3 219:16,18 242:8,10,16 243:1,3,3,21
reports 15:10 18:21 22:9,9 61:14 232:3
represent 9:2 46:4 87:2 102:10
represented 68:16
representing 4:3
requested 243:16
require 131:15 159:16 175:14
required 92:2 232:16
requirements 48:14,17
research 10:21 14:4 24:16
research-wise 12:11
resistance 107:2
resistances 107:6
resistive 106:19
resistor 107:12
respect 53:12 59:20 79:15
respective 118:21 212:10
respond 53:3 73:8,13 141:20 182:10
responding 47:7 94:3 116:14 117:21
response 18:16 18:16 71:4,6 73:5 86:8 95:20 238:11
Responses 3:15
restate 78:8,11
result 78:19 169:5
results 120:16
resume 81:21
reticent 212:7
return 197:16
returning 70:15
returns 70:16
review 3:16 4:22 17:17 18:5,22 19:2 42:18 55:16 74:8 127:4 186:10 214:21 237:1 243:16 244:10
reviewed 15:11 15:13,14 17:3 17:10,12 18:8 39:17 80:2 116:16 130:20 211:3
reviewing 16:13 16:17 18:19 20:7
rharn@wilkie.... 2:11
ribbon 184:9
Ridge 25:15
right 4:15 5:9 6:11 10:12 13:21 16:6,8 17:21 18:12 19:14,17 23:13 26:14 28:13 35:17 36:15 37:7,12 39:14 39:15 40:11,22 41:19 42:15 50:10 51:2 53:5 56:8 58:2 59:2 59:14 60:6,10 60:14 62:9 63:11,12,15 64:21 65:1,13 65:22 66:5,22 68:5,15 69:6 70:6 72:12 74:10,17 75:12 75:13 76:16 77:3,3,5,17,20 79:5 82:9 83:22 84:12,19 86:15 89:10 91:9 93:6 93:15 94:20,22 96:6 98:22 99:22 101:2,4,7 105:1,3,10,18 110:11 111:1,4 111:10,12 112:5,8,9 113:13 114:15 116:4,4,11 117:3,14 118:7 120:9,11,12 121:13,17 122:19,21 127:12 130:16 135:1 139:1,11 142:7 143:6 144:11 145:1,9 145:17,20 146:1,21 149:4 150:18 151:17 152:8,18,21 153:12,19 154:6 155:13 156:1,3,5,10,17 157:12,18 158:2 160:3 161:18,21 162:4,5 163:21 164:12 166:11 168:7,12,22 169:15,18 170:11 172:20 173:1,17 180:16 184:12 184:15 185:15 186:9,12 187:6 187:13 188:13 189:22 192:4,6 194:4,17 196:12 198:15 198:19 199:16 200:1 202:19 202:21 203:17 206:4 208:21 209:11,16 210:3,13 213:3 214:19 218:11 219:10,11,19 221:8 223:9 226:12 227:11 227:18 228:15 229:19,21 230:12 234:10 235:3 236:15 237:21 239:17
right-hand 166:4
rigid 205:20
rigor 142:11
rip 28:20 132:9
ripping 132:4
rise 77:17
risk 144:13
road 57:10
roads 235:5
robust 27:12 28:20 29:3 101:22
ROI 197:16,17
role 14:3 80:11 80:15
roll 27:6,11,14,17 28:5,7,8 30:20 30:21 36:21 37:2,2,5,9,13 37:14,17,18 53:15 54:4,5 56:21 57:6 152:2 164:12 164:13,13,18 165:4,5 200:5 200:14,19 201:4,10 206:4 217:3,14,16,22 218:7,7,22
roll-to-roll 25:6
roller 26:9 35:9 36:14 38:3,16 38:19,20,20 39:10 66:4 78:7 176:21 202:13 202:13,14 203:15 205:11 206:3,4 208:2,9 208:21
rollers 26:11,19 77:6,8,15 167:10 200:7 202:16,17 203:2,10,19 204:1 205:18 205:19 206:14
rolls 27:9 37:14

154:5,7 200:4 219:3
room 180:17,19 181:1
root 149:4,8
rotated 107:3
rotation 196:8
rotational 201:19 206:3
roughly 169:1,20 172:22 173:1,9 187:13
round 25:13
RPR 1:18 243:18
rubbing 157:14
rudimentary 83:6,13,14
ruler 173:11
rules 1:13 14:11 244:16
run 29:5 75:17 124:20 125:6,7 125:16 127:21 128:1 183:18
running 126:4 129:13 130:8 195:21
runs 126:9

S

S 104:22
safe 133:19 193:8
sake 41:4
Sands 21:17
save 100:7 237:19
saw 12:7 96:10
saying 13:2 14:11 45:14 59:8 72:17,20 89:4 89:19 103:13 106:5 128:3,18 148:6,7 150:2 150:16 163:14 166:17 184:4 188:17 190:3 223:11 224:4 224:10,11 227:3 235:10 236:2,4
says 67:21 69:9 84:19 97:4 98:22 100:5 103:11,12,14 103:17 109:11 112:1,16 116:12 133:7 147:17 148:17 167:19 205:11 206:14 226:1 227:21 229:20 229:20 230:15
scale 164:5,7 165:10,14 173:9 176:16 187:9,13
scare 151:19
schedule 14:21
schematic 189:6 190:1
school 35:3 104:3
science 11:5 32:9
scope 43:6 44:22 214:18
scopes 45:3
scrip 101:1
second 45:22 129:14 151:14 153:10 154:13 186:20,22 187:1 195:3 202:13 224:13
secondary 220:20,21
seconds 65:2 161:10
secrets 12:9
section 17:19 48:3 92:6 155:13 220:13 230:9
sections 119:13
Security 11:4
see 15:16,19 17:13,15 19:22 23:2 25:19 41:3 41:5 47:19 48:10,15 52:1,2 56:16,16,19 63:22 66:11 67:16 70:1,18 71:13 73:17 83:21 92:15 93:8 102:11 105:6 109:22 115:8 116:10 118:20 121:7 124:17,20 126:19 129:11 135:4 147:8,18 148:1 154:8 157:5 158:1 165:14 172:3 172:17 176:3 179:8 195:9 196:5 198:22 200:3,6 202:2 204:5 205:10 216:6,15 217:10,18 218:2 220:1 235:8 237:5,10 237:22 238:4 239:9,16 240:19 241:12 241:16
seeing 100:9 223:4
seen 7:13,14,21 23:19 88:22 181:21 223:7 240:11
segment 108:20
selected 244:12
semantics 107:19 111:20 157:17
semester 192:20
seminar 13:15
send 90:5
sense 50:4 67:10 67:13 75:3,5 87:12 89:20 95:3 98:11 99:16 104:10 104:14 121:13 121:15 126:13 128:12 135:5,5 135:18 136:15 136:21 137:21 137:22 138:17 140:4,12 141:22 142:12 144:8,17 146:13,14,15 148:12 149:10 149:16 150:4,5 151:6 165:4,7 165:17 167:8 167:18,21 170:5 172:4 174:16 190:21 191:5 193:6 198:12 200:22 202:1 204:10 204:11 209:21 214:22 222:8,9 223:8,14,19 226:10
sensed 83:4
senses 92:17
sensical 135:15
sensing 8:12 68:5 68:8 83:14 95:1 95:17 111:4 191:3,17
sensitivity 194:15
sensor 3:18 67:19 67:20 68:7,10 68:10,12,13,18 68:20,21 69:6,7 69:8,9,10,11,12 69:18 70:14 71:11,21 72:18 72:19,20,21,21 74:15,16 82:11 82:16,20 83:10 86:12,13 87:14 92:2,9,13,14,15 92:16,17 93:3 93:11 94:1,7,16 95:1,8,13,19,21 96:4,15,21,22 97:8,10,10,14 97:16 98:1,2,9 98:17,22 99:8 99:22 100:3,20 100:22 101:4,7 102:2,4 103:5 103:12,19,22 104:21 105:14 105:17,17,20 105:21 106:1,1 106:4,6,16 107:8,9,15,15 107:17,17 108:7,7,9,11,15 108:16,22 109:7,8,9,10,11 109:13,17,20 110:2,2,9,9,22 111:1,3,8,11,14 111:17 112:1 112:16 149:3 169:14 176:18 187:16,17 191:3,8,10 192:7,9,10,13 192:22 194:15 210:15 223:16 223:16,18,20 224:5
sensors 8:13 30:14,16,18 33:2,9,18,19 84:21 95:7 96:14 99:2 102:16 103:9 106:10,12 109:4 171:2 223:13
sentence 46:9,12 48:15 101:2 102:5,14 128:15 139:6 161:20 166:19 196:1 219:22

separate 27:16 27:17 123:16
separates 145:7,8 145:16
separating 118:3
series 153:12
serpentine 28:9 138:14
set 54:12 70:14 70:16 74:10 99:13 110:11 169:15
sets 82:9
setting 28:16 55:12 181:20
seven 80:14 231:20
severing 117:7
share 79:7
shared 82:9 85:6
sheet 24:13 244:13 245:12 246:6
sheets 96:8 129:19
shipping 26:22
shockingly 157:16
shoehorn 190:13
shoes 109:22
shorter 67:3,5 128:13
show 104:5,8 121:8 147:16 165:17 177:8 187:14 199:19
showed 65:6 232:6
showing 51:1,15 64:2 188:13
shown 118:12 160:18 168:1
shows 187:19 194:6 202:11 211:12,16
shut 90:6,9,10,12
side 10:4 45:21 45:22 81:11 115:15 154:11 195:7
sign 244:9,10
signal 69:14,16 93:1,10 94:13 95:13,16 96:18 183:5,6 194:3 194:12
signature 244:8 244:14 245:4 245:17 246:22
signed 244:13
significant 139:15
significantly 163:2,9
signing 242:16 244:12
similar 66:5 79:8 80:10,11,13,15 80:16 81:13,18 85:11 86:12 188:3,6 191:2 191:19 218:17
similarities 12:18 63:10 81:19
similarly 115:14
simple 39:3 85:4 102:20 189:22 190:1 193:8 194:20
simply 51:5 72:15 219:22
simultaneously 212:10
Sincerely 244:20
single 48:15 71:3 88:21 130:12 227:9
sit 11:3,5
sitting 7:18 47:2 55:15,17 111:4 138:8 142:11 219:2 240:7
situation 78:6,15 78:16,17,19 107:4 127:8 129:22 193:21
six 194:7,17 231:19,20
size 38:12 45:17 46:7 67:10,13 67:22 68:1 73:18 75:15 85:2,7 99:4 112:18 122:8 124:15 127:19 127:19,22 128:5 129:8,9 129:21 130:5,6 130:11 146:18 147:19 149:1,2 149:6 152:4,7 152:11,14 159:16 160:16 160:18,21,22 161:2,3 162:7 162:14,15,16 164:4,14,17,19 167:17 169:1 169:22 171:21 172:22 173:6 173:13 174:14 177:17 178:21 179:5,10 180:17,19,20 181:1,3 182:19 185:3,18 186:6 194:16 228:15
sizes 130:4 233:13
skill 20:12 21:6 21:11 40:21 43:5 50:6 52:7 69:17 72:12,12 72:14,15,21 74:3,6,10 75:9 78:18 79:4,12 79:15 80:8 82:2 88:7 91:2 99:13 102:15 108:11 109:21 110:11 123:9 130:17 131:22 133:16 171:6 196:6 216:6 223:12 229:15 231:7 239:14
skilled 70:12 72:22 98:4,14 98:16 99:9 190:9 202:21 207:7
skills 68:19 72:2
slice 33:6 38:13 89:3 237:8,20
sliced 108:4,4 228:12,16,20 230:3
slicer 23:20 199:6 229:22
slicers 24:2,12 229:15
slices 212:11 237:18,18
slicing 229:1,21 230:4,7
slightly 157:5
slip 187:15 195:17
SLM 243:22
slow 71:7 109:5 200:17,17
slowed 200:15
slowly 35:17
sluggish 145:3,9 145:17 201:5
sluggishness 154:5
small 11:10,20 38:7 68:2 70:4 75:1,17 88:18 88:19,20 89:4,6 89:13 108:1 121:22 122:2,4 122:7,11,16 125:3 127:13 128:9,16 129:2 129:3,19 130:4 130:11,11 138:3,7,10 139:10 142:3,9 142:12 144:18 147:11 148:22 148:22 149:1 149:11 150:1,7 150:12 151:1 152:3,12,14 156:7 160:13 160:14,22 161:1 162:20 163:1,8,10,14 163:19 165:1,3 166:15 170:11 171:12,17 187:16 192:14 194:17,17 201:16 208:6 209:11
smaller 38:8,9 67:19 147:21 150:3 160:6,10 160:12 161:1,5 163:2,9,17,21 164:4,10,19 166:20,21 167:2 168:20 182:9
soda 180:20
solution 136:18
solved 75:11
somebody 71:18 136:22 203:7 226:11
somewhat 59:16 82:8 137:9 162:22 164:5
soon 156:19
sorry 54:20 98:20 122:6 156:13 166:5,7 166:8 168:10 174:22 176:11 212:22 221:19 225:8,21
sort 8:8 9:21 11:11 23:1 25:3

25:18 26:15,17 28:15 31:17 55:1 60:13 63:20 75:10 78:5,13,14 84:4 86:22 95:17 96:14 109:22 115:8 122:10 129:22 133:18 152:9,13,17 153:7 155:8 157:9,21 161:3 162:11 172:7 175:20 177:11 180:4 185:18 187:1,13 200:13 210:1 215:4 218:14 219:3 222:14 225:19 226:20 228:14 229:2,6 232:2 233:9,11 233:20
sorts 36:10 53:20 57:8 69:22 73:13 101:22 132:20 193:5
sounds 12:9 28:1 216:15 219:6 219:14
source 184:10
space 44:17,19 75:1,2 89:6 130:7 137:3 160:14 171:17 175:1,13 176:14 177:5 179:17 190:15 190:22 193:14 198:15 211:5 233:17
spans 100:17
speak 19:3 20:17
speaking 72:10 93:15 148:12 169:20 173:1 177:15 189:22 214:4
speaks 40:2 220:7
spec 169:20
specific 7:7 24:1 53:3,11,22 55:22 57:2 59:20 76:13,13 137:7 154:10 177:15 227:7 235:11 236:8 239:6
specifically 9:14 9:19 17:2,18 49:12 61:7 67:11 79:11 156:22 167:16 215:5 220:4,10 224:14 225:2,6 225:15 226:5 229:13
specification 79:7 82:9 84:8 84:15,19 85:9 137:17
specifications 73:4,6 74:13 178:15
specified 67:9
speculating 232:2
speed 24:2 27:11 30:21 86:8 114:11 200:19 201:8,9,9 203:15 209:16 210:1,4,7,12,13 210:20,22 211:1 213:17 214:1 236:3 237:7
spend 16:13 19:11 137:1,3
spent 11:18 19:12 65:2 81:1 81:4 216:16
spikes 11:11
split 32:11
sponsored 12:20
spool 145:3,9,17 153:8 155:13 216:8 217:3
spooled 218:10
spools 154:4 157:18
spot 49:7
spring 94:4
squeeze 137:2
squeezing 177:13
squished 228:9
stability 78:2,4
stack 26:15 173:8
stage 54:12 55:12
stamp 15:20
stamped 15:21
stamps 186:18
stand 203:21
standard 47:11 222:3 232:21
standards 220:14
standing 34:21
start 24:7 39:4 119:18 120:9 120:13 130:8 154:2 156:4
start-stop 120:2
starting 118:7 120:8
starts 58:5
state 1:18 4:15 79:2 160:5 243:4
stated 79:18 162:8,9
statement 124:10 127:3 129:2 131:6 148:5 200:7
states 1:1 103:4 126:13
static 202:22 205:6
staying 161:7
stick 23:2 71:21 91:20 93:12 129:5 147:2 162:12 173:14
sticking 91:20 138:17 149:12 168:21 202:8
sticks 23:4,10
stop 77:16 120:8 120:10,13 129:22 154:2 157:3 171:22
stopping 118:7
store 44:4,11,17 44:19,20,21 45:9,18 53:7,8 53:16 54:2,4,6 54:8,9,13,16,18 54:21 55:5,18 56:6,21 57:3,3 77:17 85:3 173:8,11 240:22 241:3,5
straightforward 230:6
Street 1:16,21 2:16 243:9 244:2 245:1 246:2
strength 181:4
strict 133:18
strip 112:5,7,7,12 112:17 137:8 141:3 152:14 156:20 157:4 172:14,17,19 174:4 196:2,3,7 196:8 203:14 204:19 212:10
strips 128:12,13 128:22 129:3
strong 141:7
stronger 181:14 183:4,8
struggling 222:14 235:22
stuck 187:21 215:2
students 25:14 25:16 72:7 112:2
studied 123:14
stuff 9:13 14:7 39:4 121:16 134:4 167:10 187:18 227:18
subject 127:14 127:16 128:17 129:3,6 152:16 153:22 154:4
submitted 5:6 18:9
subsection 92:7
substance 58:14 61:14
substantially 160:2,6 161:4 161:15 162:2
substitute 184:5
succeed 231:9
success 74:3 230:11,18,20 232:8 239:15
successful 231:1 231:2,5
suck 181:16
suction 178:21 181:4 185:14 185:18 186:6 189:16,17 190:11 199:9 200:17 206:2
sufficient 85:5 121:1 124:11 124:14 127:1 208:19
sufficiently 233:7 238:16 240:8
suggestion 101:7 101:8
suggests 105:16
Suite 1:16,21 2:16 243:9 244:2 245:1 246:2

summaries 134:22
super-concerned 162:10
superimposed 188:10
supervisory 14:4
supply 201:4
support 3:14 11:1 12:12 125:13
supportable 164:6
supported 241:11
suppose 105:4
supposed 13:15 17:21 142:16 188:15
sure 4:17 6:4 9:10 11:13 27:14 28:4,20 31:1 34:2 36:8 36:12 38:10 39:16 54:7 57:10 58:9 60:3 62:6,19,22 63:14,22 64:7 64:21 65:4,7,10 65:10 66:12,16 66:22 68:22 72:9 76:15 78:4 82:14 87:9 93:16 107:12 113:4 118:8,16 119:2,8,9 121:18 124:9 127:18 129:16 133:13 140:14 147:1 158:2 163:12 168:8 174:21 175:5 181:6 182:6 184:14 190:15 196:4 208:17 209:6,9 210:5 210:15 211:18 212:12,16,18 214:2 217:7 219:15 220:8 220:18 227:17 239:6 241:20 242:6,17
surface 45:6,8,10 45:22 46:1,3,6 97:7,13 175:19 175:21 241:6
surprise 22:5
surprised 22:12
suspect 188:4 190:2
switch 102:20,22 109:3,3,5
sworn 4:12 243:8
system 27:16 32:22 33:4,11 65:18 74:20 81:14 82:8 89:17,22 91:21 91:22 93:2 94:11,16 95:15 95:16 96:20 97:4 104:13 114:14 115:18 116:10 123:15 123:15,16,17 123:18,19 124:3,6 128:14 132:12,13,14 132:16,18 136:2,3,4,6 137:4,5,17 138:6,7 142:2 144:10,14,18 144:19 146:10 146:12 147:4,5 147:8,9 151:2 157:21 165:5 165:18 173:19 176:22,22 177:12 179:3 183:13,17,17 183:18,19,22 184:17 187:16 190:20 191:8,9 192:5,5 195:7 195:13 196:1,7 196:22 201:3,7 204:18 205:13 205:14 206:1 206:16,16,17 206:18 207:1 207:14 208:4,5 209:22 211:12 226:2,12,13,14 228:14 231:10 233:19,20,22 234:1,5 237:2,2
system's 208:10
systems 8:11,11 8:14 32:6 65:5 65:19 73:9 75:11 80:12,16 81:5 88:13 89:16 125:11 128:3,4,21 129:5,16 130:7 131:7,8,9 136:11,12,14 136:20 141:1 142:7 143:5 144:16,17 147:8,10 148:9 148:10,11 149:13 150:3 150:20,21 160:13 161:5 163:3,4,9 165:18 166:18 167:19 171:10 172:3 173:15 173:19 184:13

T

T 1:18 243:2,18
table 3:1 15:1 232:2 239:5
tachometer 30:21
take 11:22 14:19 17:7,21 20:20 32:21 33:10,10 33:21 38:22 40:5,9 41:5,18 42:5,7 45:2,13 48:21 49:6,18 50:2 52:21 53:17 55:9,9 56:13 58:5,7 60:15,15 62:3 64:5,16 66:21 76:4,5 82:5,18 85:17 88:13 95:15 100:4,5 105:19 108:12 115:20 117:5,5 125:8 126:10 134:16 135:3,4 136:13 137:12 137:20 140:10 141:11 144:5 144:21 146:10 146:11 147:1,2 147:10 151:22 155:3 156:11 158:1,20 159:4 159:10,19 160:9 164:1,11 172:2 174:14 174:15 175:2 176:2 177:5 179:21 180:5 183:4 186:2,16 186:16 192:11 192:20 194:14 198:2,16 204:9 217:4,6 219:12 219:19 227:16 227:21 229:1,3 231:16 242:6 243:5
takeaway 31:14
taken 1:15 8:2 9:16 20:5 89:10 93:6,7 138:13 138:13 148:8 148:19 149:6 173:11 243:9
takes 89:11 149:22 150:11 151:7 206:8
talk 26:9 39:3 49:7,8,13,14,19 53:2 54:13,16 61:11 62:4 76:14 85:22 99:21 113:14 115:2,9 118:4 118:18 120:2 129:19 162:20 162:21 163:20 167:5 168:2 180:2 193:18 205:18 216:14 225:2,11
talked 17:16 61:8 81:19 123:2 143:21 165:13 216:22 226:6
talking 7:10 32:20 54:1 58:1 58:1 62:7 74:22 88:14,16 94:12 98:6 99:3 100:19 101:11 113:17 125:3 130:4,9 155:1 158:8 167:6 170:21 171:10 175:9 176:9 177:12 179:18 185:12,13 198:13 228:4 231:3 236:12
talks 49:9 101:3 118:1 158:5 205:22 217:13 228:6 234:17
tall 178:9,10
tape 115:18
tapping 22:8
task 18:22 127:5
taught 185:4,19 226:4,22
taut 169:6
teach 10:19 92:9

92:11,13 102:15,17 192:15 222:13 222:16,19 223:12 227:2 227:13
teach-away 221:16
teaches 127:1 134:12 221:9 222:2 227:9 229:11 239:9
teaching 137:7 162:17 175:11 186:8 204:17 204:18 221:12 222:3 223:17 224:9
teachings 191:11 239:14
team 13:16 33:21
teams 13:6
tear 27:15 35:20 36:2 37:3,7 38:9 75:18 115:5 139:22 140:1 141:2
tearing 36:5
tears 144:13
Tech 10:18 12:14 13:1
technical 10:4 58:4 84:4 200:5 203:9
technically 121:15 190:14 191:4,20
technique 96:6 96:13 191:3,16 191:20 194:3
Technoeconomic 197:21
technologies 1:4 4:3 5:17 6:1 53:13 54:14 55:13,22 56:7 57:15 87:22 243:20 244:4 245:4 246:8
technology 1:6 3:18 5:17,20 9:12 11:6 14:5 14:6,9 59:20 104:22 110:2 241:14 243:20 244:4 245:4 246:8
teens 25:13
tell 17:16 21:4 22:11 29:19 30:19 63:15 67:4 73:6 85:18 86:9 92:10 119:2 136:16 138:8,11,16 151:10 174:7 190:6 197:12 198:8 206:13 219:6 222:21 223:21 243:8
telling 57:22 149:14
tells 30:21 78:9 203:10
Temperature 34:18
tend 9:2 29:6 127:9
tens 129:14 237:18
tension 27:13 28:15,16 34:12 35:4,10,21 36:1 36:5,18 37:21 37:22 39:11 78:9,19 114:15 114:21 115:3,5 115:19 116:5 121:1 124:11 125:1,4 126:4,5 126:11,16 127:1,9 131:2,4 131:12,12,17 131:17,19,21 132:4,8 135:9 138:21 139:4,4 139:7,9,10,11 139:14,18,22 140:6,7,18,19 141:2,2,8,9,17 142:4,8,13,13 143:9,10,11,11 143:17 144:1 144:12,13 146:8 148:1,18 149:7 153:3,8 153:10,11,18 153:21 154:3 155:9,18,21 200:11,18 201:3,18,20 203:13 204:18 204:19 205:13 205:16 206:1 206:15 207:1 207:14 208:6 208:19 214:5 214:12 216:20 216:21 234:7 236:6
tension-related 126:3
tensioned 66:4 146:4
tensioning 66:5
tensions 141:5 144:5
term 24:8 45:1 47:4 52:1,8,17 53:10 55:5,21 56:3,9,12 59:17 97:16 143:13 200:5 227:15
terminology 96:10 129:4 202:15 227:20
terms 8:16 12:18 13:7 16:17 24:13 25:21 27:1 28:16 33:15 34:16 36:9 37:12 47:12 48:18 53:20 54:1 59:22 70:1 86:7 98:13 121:19 124:14,16 125:3 126:11 129:15 134:3 138:1,19 141:20,20 142:2 148:21 151:1,13,17 153:3 163:16 176:13 178:19 179:5 181:2 182:3,19 183:3 186:3 197:1 198:1 204:11 213:19 214:8 215:3 221:7 229:10 234:20 236:12,12
testified 4:12 87:14
testimony 4:20 5:5 10:11 15:5 20:8,10 58:14 86:14 87:3 239:13 241:12
tests 29:6 124:20
text 55:11
thank 15:3 64:11 64:14,22 100:7 113:9,12 166:2 176:11,12 217:9 240:16 242:13
Thanks 64:8 158:14 211:2
theirs 22:6
thereof 45:7
they'd 71:19 90:5
thicker 29:2,3
thing 14:22 34:5 34:6 44:13 66:21 73:20 75:10 83:22 84:2 91:1,6,19 93:11 115:4 132:19 139:21 140:22 147:7,9 152:11,15 160:11 173:6 178:11 180:4 191:1,7 197:5 197:22 199:11 200:20 206:13 210:19 233:15
things 10:4,10,14 11:3,14 13:8 25:5 29:15 31:3 31:16 34:12,17 36:11 40:18 45:15 56:6 64:6 71:9 72:14 73:14 86:9 87:11 88:9 90:15 113:18 115:1,4 117:13 119:15,18 124:17 132:21 149:16 164:20 171:2 175:9,17 178:15 180:5 181:16 182:2 184:22 188:1 188:21 189:7 189:13,15,17 189:21 190:4 193:5 196:15 196:16 197:19 200:18 201:17 210:5 213:17 215:1,2 226:12 226:17 233:13 237:8
think 9:17,18 13:14 16:9,12 17:7,8 18:3,3 19:18 20:6,9,10 21:8,18 23:14 23:18,22 26:2 28:15,21 29:5 29:16 30:4,10

32:4,11 34:15 35:1,2,16 36:22 37:6,11 39:9 40:17 43:8 46:15,19 48:6 49:3,11 52:20 52:20,20 54:3 55:4,8 56:20 57:11 59:16 61:17 62:15 69:17 70:19 71:18 72:9 73:3 74:6 75:13,14 77:1 78:3,16 79:16,16,17,19 79:20 82:7 84:2 85:8 88:19,22 89:3,6 90:3,8 91:10 93:5,13 93:19 94:10 96:17 98:3,4,6 98:7,13 99:20 101:19 102:14 102:19 103:11 104:12 105:19 107:18,18 109:14 111:19 111:20 112:2 112:21 113:17 114:4 115:22 116:6,22 118:11 120:19 122:21 123:18 125:2,20 129:19 131:2 132:19 133:16 137:3 140:9,13 142:19 143:13 143:19,21 144:1 145:12 149:18 150:18 151:22 153:6 154:8 157:11 159:22 160:10 160:15 163:7 163:13 164:9 164:20 165:16 170:7 171:1,14 173:18,20 174:7,11,11,17 175:8,16 176:9 177:13,14 178:4,7,10,12 179:18,19 180:1,12 181:9 181:19 182:1 184:3,4,13 185:11,16 187:10,22 188:22 190:8 190:12 191:22 192:18,22 193:2,10,10,11 193:21 195:14 196:9,17 197:4 198:20 199:5 199:11 200:9 200:21 201:17 202:17 204:1,7 205:6,7,8,11 207:22 209:5 209:12,17 210:11 211:10 211:15 212:16 214:16 215:9 217:12,19 218:16,18,19 219:2 220:7 221:1,22 222:3 224:1 226:18 226:18 227:5,8 227:15,15 228:8,21 229:8 229:18 230:5 231:16,16,19 232:10 233:15 233:18,20 234:3 235:12 238:8

thinking 36:10 69:21 166:8 173:14 178:18 189:21 193:12 227:7

third 153:18,21

Thomas 1:10,14 2:2 3:3,13 4:1,2 4:11,14,17 10:10 19:10 20:2,17 27:1 30:10 36:12 39:7 40:8,17 41:12,21 42:7 42:17 43:1,11 44:9,16 46:12 46:20 47:10,22 48:2 49:3,21 50:14,21 51:7 51:13,20 52:14 53:4,15 55:15 56:8 58:8,13 60:1,9,17 61:3 61:13,19 62:8 63:5 64:3,9,12 68:3 70:3 72:9 74:14 75:7 76:15 83:12 84:7,14 85:11 88:2 96:3 97:6 97:22 99:5,17 102:3 103:14 104:2 109:21 110:13 111:10 113:3,8 115:7 118:1 121:17 122:9,15 123:1 124:1 126:20 129:6 130:22 131:11,15 132:7 134:10 134:20 135:7 135:22 137:6 137:14 138:4 140:5 141:4,13 144:11 146:22 148:18 150:11 157:16 159:4 159:15 160:17 161:7 165:8 167:12 170:16 170:17 171:20 172:6,14 175:1 175:5 176:8 178:7 183:21 188:9 190:8 192:15 201:2 202:4 203:18 207:2 210:18 213:21 215:4 218:18 219:9 219:12,19 220:10 221:20 222:7,9,11 225:6 226:3,21 230:8 233:4 234:20 238:22 240:7 242:5,11 243:6 244:1,5 245:5 246:9

thought 20:15 39:5 46:16 50:6 61:10 82:4 83:19 107:7 116:1,8 123:3,6 133:13 134:1 134:19 142:14 194:13,21 199:3 213:16 214:7,13 215:1 229:9 240:2

thousand 137:1

thousands 237:18,18

thread 195:16

threading 195:8 195:13,15,15 195:21 234:7 236:7

three 66:3 100:17 119:4 154:9,14 155:9 156:8 189:17 194:7 194:17 234:14

three-column 100:16

throw 124:2 190:4

tighter 236:16 237:20 238:2

time 7:17 10:9 11:8,10 13:10 25:19 28:3,19 30:8 34:1,2,6 37:6 38:16 43:3 45:5,14 61:13 71:6 73:5 83:17 83:20 84:6,12 84:13 92:21,22 96:1 100:7 102:8 116:2,8 118:22 122:14 140:14,16 158:19 163:10 169:16,18 186:11 194:19 197:3,13 210:14,22 212:15 216:16 221:19 225:4 240:1,11 241:18 242:11 244:15

times 8:1,3 9:15 35:4,13 38:4 135:16 146:4

tin 95:8

tire 93:6,12

tobacco 218:19

Tobias 20:1

Tobin 43:20,20 167:7 186:10

Tobin's 225:20

today 4:9,19 5:11 7:18 10:5,10 12:4,11 14:12 15:4 28:13 31:19 32:5 140:16 142:11 168:2 214:16 219:2 232:2,11 240:7 241:18 242:12

today's 15:8

told 99:5 135:22 136:4 178:5

203:18 204:13 205:7 214:16 225:20 227:5 229:7 230:1
tolerance 169:9 169:13,20
top 26:11,16,21 26:21 27:21 80:1 92:10 100:14 106:4 116:18 155:12 159:18 161:9 166:19 168:3 177:3 184:9 188:10 198:8 228:17,17
topic 86:15,21 232:10
touch 14:10 107:15,16 108:15
touched 233:12
touching 108:17 111:21 112:4
towels 36:22 37:1
track 30:20
trade-off 237:6
trade-offs 237:5
TRADEMARK 1:1
transcript 17:8 243:14,16 244:7,9 245:8
transcription 243:12 245:11 245:13
transducer 94:15 94:18,18,19,20 94:22 106:20
transition 138:9
transport 115:18 210:7
transporting 209:15 210:1,4 210:20,22 211:1
travel 209:3
traveling 77:3 202:10
travels 202:9,13
treated 156:2
trial 1:2 4:21 6:13
trigger 71:8
trivial 189:13
true 41:21 42:11 70:16 72:10 87:5 104:2 198:2 245:10 245:12
true-false 70:17
truth 243:8
truthful 14:14 15:5
try 37:17 62:2 148:11 154:19 186:5
trying 13:13 14:19 26:2 36:21 62:21 104:10,13 137:2 167:18 178:16 187:15 190:16 195:16
tubes 96:7
tuned 33:6
turn 44:1 60:3 78:21 94:8 96:1 105:3 113:13 153:2 164:3 220:13 239:2 240:17
turning 31:11 93:9
twice 8:4 9:18,19 161:20
two 5:2,7 6:10 18:9,19 19:6 20:4 28:2 30:1 47:4 57:18 80:10 81:1,4,9 85:16,17 87:2 110:3 141:21 152:8 154:11 154:12 161:10 184:15 194:7 201:17 202:15 213:2 219:3 234:3 238:7,11
two-part 216:8
type 24:15 27:13 34:11 73:15,17 74:15 90:4 91:13,19 98:8 103:5 106:16 149:13 152:15
types 25:7 29:4,5 33:9,18,22 45:15 86:9 102:16 103:8 119:18
typewritten 243:12
typical 95:7
typically 8:10 13:5 26:8,12,17 27:7 68:13,15 95:13,14 118:9 143:10 144:16 213:18 237:4

U

U.S 3:16
Uh-huh 59:7 159:21 194:9
ultrasound 108:16
umbrella 13:2
uncovered 194:11
undergraduate 72:7 192:15
underneath 239:4
understand 4:19 5:5,16 6:2 14:11,16 43:5 48:11 49:21 55:4 58:17 62:7 63:1 67:8 75:9 77:8,14 78:18 83:18 119:6 125:19 127:16 130:15 133:2 143:4 150:8,10 168:15 175:4 182:6 195:6 205:3 207:13 217:2 220:18 221:4 222:17 224:14 232:15 234:4,12 241:21
understanding 15:17 16:4 20:22 21:3 24:8 24:10 33:20 41:7 44:22 45:3 45:15 47:11 49:15 56:9 61:20 83:3,6,14 87:4 91:8 132:22 134:10 160:18 205:5 206:5 207:5 221:12,13 225:13,21 226:4 228:3,19 229:6,10,12,19 242:1
understood 60:17 65:5
undesirable 78:19
unit 117:7 185:14 188:10,14 189:3 190:10 199:9 202:19 202:20 203:17 203:17 206:6,8
UNITED 1:1
units 189:16
universal 193:19
unlimited 192:20 193:13,15
unmodified 74:16
Unpacking 163:11
unpaid 11:3
unpatentability 51:1
unpatentable 48:13 51:16
unrebutted 239:12 241:11
unrolled 35:16
unrolling 27:9
uprights 131:8
USB 91:20
use 14:9 52:1,8 53:8 54:8 55:4 57:17 73:7 74:21 96:13 97:16 102:1 103:12 107:4 108:16 109:5,6 110:1 111:10 111:14 143:4 143:13 144:20 146:15 178:19 192:7,9 211:8 224:22
useful 20:11 123:3,7 125:15 130:17 171:19 177:22 196:20 197:5
uses 7:3 68:10 76:14 115:18 116:5 121:11 133:5,5 146:7 161:20

V

v 1:5 243:20 244:4 245:4 246:8
vacuum 67:1,2 68:10,11 70:9 71:5 75:2 76:8 77:20 78:1 84:22,22 89:16 89:17,22 99:2,2 116:5,10 118:13 119:11 121:5,11

122:10,16 123:4,7 124:2,6 124:12,16 145:22 146:8 146:15,16,19 147:7,9 148:2 165:18 171:17 173:15,19 177:7,16 178:2 178:7,10,12,14 179:15,16 180:22 181:1 182:20 183:4,5 183:6,8,13,17 183:17,18,19 183:22 184:10 184:11,12,14 184:16,17,21 185:3 186:6,7 189:10 190:9 191:3,8,9,9,12 191:17 192:6,7 192:8 194:3,7 194:12 195:7 195:12,14,21 196:1,7,14,22 197:3 208:18 209:2 223:13 223:15,16,18 223:20 224:5 228:14
vacuum-based 192:22
vacuums 29:20
vague 91:13
valid 88:4,5
validity 21:13
value 70:17 207:15
variable 96:8 180:8
variables 34:8 181:3,20 182:4 182:17 183:4 210:19
variation 37:12
variety 95:6 135:19 144:9
various 13:6 35:17 43:22 57:14 155:17
varying 46:5
velocity 35:1,5 201:19 206:3 210:14
venture 174:13
verb 24:9
version 64:12 76:19 104:17
versus 10:6 70:1 163:8 224:5
vertically 175:21
vibration 34:20
video 26:14
videoconference 2:3,4
view 48:12 52:18 99:6 235:9
voltage 95:20 96:14,18,21 97:8,19 107:4
volume 178:11 179:1,19,22 180:8,8,9,11,13 180:15,17,19 182:8

W

Waffner 17:14 59:4 63:1,2,6,8 63:8,12,14,16 64:1,17 65:14 66:11,20 68:7 69:5,11,18 70:3 74:20 75:4 85:12,21 86:2 88:17 89:5 90:21 92:9,11 92:13,15 93:19 95:3,17,18 104:5,13 162:13 163:4 164:12,13 171:11 175:18 176:9 177:15 186:8 187:21 194:2,6 239:9 239:15
Waffner's 68:5 70:8 72:17,20 86:12 87:15 94:16 96:6,13 141:15,17 175:10 187:4 187:20 191:3 191:16 192:4,5 192:5
waive 244:11
Wales 2:3 4:5
wall 194:18
want 4:7 8:18 13:4 15:22 24:12 25:12 27:8 34:5 37:8 37:11,13 38:19 49:7,12 53:11 54:12,16,19 55:8,22 56:4 57:1,8,10 59:21 60:3 62:19,21 64:9,21 67:11 71:21 73:4,15 75:16,17 76:12 83:22 86:5 87:9 94:17 111:2 121:18,18 154:22 157:14 157:16 158:19 162:21 178:19 183:12 186:16 192:20 198:5 200:14 206:21 208:1 209:19 220:17 227:4 230:15 233:21 237:3
wanted 31:17 55:11 65:6,11 111:11 137:11 139:13
wanting 43:19,20
wants 129:5 161:5 167:20
warn 103:8
Washington 1:21 245:2 246:3
wasn't 40:2 41:10 41:11 42:15 43:8 45:2,13 46:10 50:19 56:14 57:21 75:21 83:9 86:1 86:2 87:10 92:3 125:7 126:10 128:18 132:3,6 134:19 136:5 140:22 141:19 142:6,8 143:2 147:14 159:13 172:2 173:5 174:14 177:20 179:11 185:5 186:9 203:8 204:2 207:12 208:8,12 225:19 234:2
water 34:17
waves 34:21
way 9:22 21:4 22:12 25:6 26:2 35:5 36:3 40:21 50:18,21 51:8 51:13 71:8,15 71:16,17,18,19 71:21 72:6 74:7 74:8 75:19 81:11 82:1 86:5 86:12 98:10,10 101:13,19,21 103:1 112:22 119:11 123:10 124:4 128:4 130:14 131:3,7 132:13 133:4 134:11 135:12 136:3 140:17 141:15 147:18 160:9 195:15 195:16 196:11 196:19 214:3 215:2,6 223:3 223:17 229:8 235:18
ways 35:10 66:17 85:21 101:10 104:6,8,11 231:13
we'll 16:8 32:19 56:19 182:2
we're 12:17 13:17,20,22 24:5 28:12 45:16 54:1 58:1 58:1,10,12 62:7 65:19 68:14 70:20 74:22 88:13 89:4,18 96:3 107:21,22 111:9,15 113:5 113:7 128:13 129:22 130:4 130:20 132:16 132:18 143:22 156:6,17 158:17 159:1,3 161:1,4 162:10 162:12 165:1 189:20 192:7 197:7 200:9,10 200:11 219:16 219:18 231:3 242:8,10
we've 18:2 24:10 33:15 35:16 37:1 62:14 66:20,20 94:11 98:22 101:9 117:11,12 123:13,14 132:19 148:15 170:7 175:18 185:16 192:6 199:1 200:22 233:11
weather 32:10
weatherman

32:13
weave 14:1
web 19:13 33:14 33:15,16,17 34:9,11,20 35:7 35:8 36:13 44:10,17,20 59:1,6,10 69:2 75:8 76:9 77:3 85:1,5 118:21 120:16 121:1 195:9 208:19 209:3 213:5 214:5 217:16 218:10 241:3,4 241:6
Weber 1:6 5:17 5:20,20 6:6,9 6:21 7:11,14,19 9:15,16,17 20:22 21:13 22:2,19,21 75:20 104:17 238:11 243:20 244:4 245:4 246:8
Wednesday 1:17
week 16:20
weeks 16:21,22
weighed 228:13
weighing 229:2
weight 33:7
welcome 55:16 58:13 61:4 63:5 113:8
went 15:9,9 25:14 132:15 144:6 170:2 238:20
weren't 7:16
When's 13:10
width 164:15,16 164:16 176:3 176:17 177:4 187:10
widths 176:3,19 187:12
wild 7:20
Wilkie 2:5 4:2,6
Wilson 104:22 105:13 111:20 111:20
wire 95:14
wish 167:22
withdraw 188:5 193:22 207:3 241:22
withdrawn 15:18 44:18 48:1 68:3 78:13 98:3 120:21 133:1 170:13 224:7
witness 8:6 9:14 58:9 60:21 61:5 98:20 113:2,4 122:6 158:22 174:22 203:5 219:15 242:13 243:7 244:10 245:5,17 246:9
wonderful 147:15
words 32:15 53:4 57:18 72:18 133:19
work 6:5,9 7:20 8:10 9:21 10:5 11:9,12,18 12:7 13:1,1,3 15:2 16:8 27:3 33:16 50:5 74:16 85:9 86:4 132:13,13 133:20 136:2,3 136:11,12 148:11 179:19 186:7 192:21 197:12 204:3 204:12 211:3 214:10 222:22 223:6 230:22
worked 11:21 13:10 204:8
working 12:10 22:11 80:11,15 81:2,4 132:14 136:4,6 149:12 149:20 150:13 150:14,17 193:17 199:4
workings 30:2
works 58:8 83:10 83:11 86:12 128:14 132:11 136:1,16 200:16 201:13 204:4 207:14 229:7
world 193:7
worries 96:5
worth 236:18
would've 181:21 199:11
wouldn't 21:4 36:5 70:21 72:5 75:2,5 105:22 110:10 112:2 122:20 123:16 125:12 130:7 138:12 144:10 145:10 146:10 146:11 150:14 165:19 169:5 173:5,21 191:1 191:5 223:1 224:12
wrapping 25:16 242:5
write 48:10 54:4 145:19 154:19 155:4 156:12 170:21 186:13 232:12
writing 80:2 212:6 230:21
written 59:19 83:7 109:17 116:7 133:10 140:11 141:10 173:21 220:11 226:5 229:13 232:3 244:22
wrong 191:14
wrote 40:14 49:1 139:6 144:6 164:22 170:4 186:3 195:9 196:5 204:10 204:11 221:4

X

X 235:19

Y

yank 35:20,22 36:5 37:7
yanking 38:15
yeah 9:5,19 10:2 11:22 12:2 13:4 14:6,7,9 17:1 17:20,20,22 18:20 19:9,18 20:15,16 21:22 24:7 25:21 27:6 28:18 30:9,16 31:3 37:16 38:22 39:9 40:1 41:13,18 42:4 48:6,6 52:11 56:18 57:22 59:7 63:22 67:17 69:20 70:18,18 71:2 71:12 74:20 76:3 82:4 85:18 86:4 91:17,22 93:10 94:5,9 99:1 100:19,20 101:8 102:2 103:11,17 105:2 107:18 110:7,19 112:15 117:19 118:9,10,15 119:6 121:18 124:2 125:6 127:18 141:18 145:10 152:13 154:8 155:16 155:19 156:6 157:15 158:16 158:21 174:7 181:5,22 190:21 191:7 191:11 192:3 192:12 193:5 193:10 194:9 194:19 197:9 199:13 202:12 202:15 203:7 204:20 209:1 209:17 211:6 211:17 214:14 214:21 216:10 216:18 218:4 220:12 221:1,2 221:7 222:14 222:19,20 223:2,6 224:10 226:1 227:18 228:22 230:5 230:13 231:14 231:16,16 238:19 240:1
year 8:4 12:1 30:11
years 6:10,12 23:7 25:9 79:20 79:22 80:10,14 81:1,4,8,9 193:20 231:18 231:19,20 241:13
Yep 5:22
yes/no 68:21 97:3 103:6 106:6,22
yesterday 19:12

Z

Z 8:20
zero 55:11,22 63:12 76:12 137:16
zero-tension 78:5 78:14,16
zeroed 137:19
zone 145:1,8,16 153:7,10,18,21

154:3 155:12 155:15 156:2,4
zones 154:9,14 155:9 156:8
Zoom 2:3,4

0

0 97:4
00258 5:3
00269 5:3
013 5:11,11 6:7 6:22 16:11 21:14 39:15 41:7 42:18 43:2 43:12 44:1 46:22 47:5 50:10,12,15 51:2 52:18 54:11,17,19,20 55:16 64:13 75:20 79:4 85:20 87:1 239:1

1

1 63:9,14,22 80:9 97:4 146:10 153:6 155:1,12 158:6,17 174:12 175:18 176:21 178:8 178:13 199:17 199:19,21 200:1,6 202:15 202:19,20 203:17 206:2 228:9,10 236:10 240:20 241:10
1.1 240:22
1.2 241:1
1.3 241:2
1.4 241:5
1:13 159:2
1:20 159:2
10 174:10,11,18 174:21
10,647,013 1:9 3:10,16 5:8
10:12 58:11
10:21 58:11
1001 3:9
1003 239:17
1004 3:6
1005 3:10 145:14
1006 3:11,12 64:13 76:18
1017 116:21
104 3:18
11 1:17 145:5 153:14,15,17 155:15,17 156:4 174:8,8 200:19 201:4 201:19 203:15 206:3,4 243:10 244:4 245:5 246:10
11,331,823 3:9,12 3:17 5:8
11:33 113:6
12 46:20 47:16 67:18,19,19 75:6 88:18 89:15 90:2 98:7 100:19 104:13 108:1 112:3 122:1 124:11 129:1 131:2,12 132:1 138:2,17 138:22 139:7,9 139:17 140:2,6 140:18 141:14 141:16 143:16 144:18 146:12 147:3,11 148:6 148:7 149:11 151:8 152:3 153:2,19 160:2 160:5,16,18,22 161:14 162:2,3 162:7,11,13,17 163:1,1,17,19 164:19 165:2,3 166:13,20 167:8,11,13 168:6,16 170:22 171:5 171:21 172:7,8 172:12 174:5,8 177:13 179:17 188:10 189:9 191:21 201:16 210:1
12:09 113:6
13 46:20 84:20 101:1 112:7 172:19 196:2,7
14 154:1 156:5
1400 1:16 2:16 243:9 244:2
15 16:18 117:12 153:18 156:7 243:17
155 3:6
16 217:19,22 218:7 240:17
17 239:10
1730 1:21 245:1 246:2
17th 1:15 2:16 243:9 244:2
18 25:14 209:3
19 25:14 79:3 85:1,5 239:11
1970s 213:6,9
1980s 31:11
199 239:17,17

2

2 44:2 80:14 154:8,8 155:15 176:19 200:1,8 211:15,18 212:8 225:6,8 228:8 236:10 239:10
2:40 219:17
2:48 219:17
20 16:18 85:3 220:15 236:11
200 235:4,5
20036 1:21 245:2 246:3
2007 3:13
2008 3:18 104:17
2016 212:17,19 213:2
2017 25:14 211:7 211:21 229:16
2019 25:17 211:20
202 1:22 245:2
202)-232-0646 244:17
202)232-0646 246:4
2020 25:17
2022 23:21
2024 1:17 5:3,3 115:9 243:10 243:17 244:4 244:21 245:5 246:10
2024-00258 16:5
2024-00269 16:3
20th 211:22
21 48:10 49:9
215 243:13
22 175:8
228 239:17
23 217:3,10,14 218:8 224:13 224:18
232-0646 1:22 245:2
233 239:18
238 239:18
24 241:1,12
25 221:8 222:17
258 104:18
26 118:13 170:19 220:19
27 51:21 52:2 54:3,9 55:19 56:10 117:8,13
28 82:5 113:13 120:20,22 159:5 239:10 241:1,7
29 62:16 232:12

3

3 77:1 100:14 118:12,20 154:8 161:8,12 169:2,3 176:19 194:6
3:20 242:9
3:26 242:9
3:27 242:18
30 8:3 65:2 77:6 78:7 120:21 193:20 208:21 236:11
30/70 9:6
300 2:6 235:3
31 63:19 66:11 151:11,13 241:8
312)728-9147 2:8
32 84:20 241:13
322 105:3,4
34 99:17
35 23:7 99:20 159:19
36 195:4 241:13
37 124:8
38 81:8 156:15 177:1 239:10 239:16
39 84:20 175:6,9 176:9,22 186:19

4

4 3:3 11:19 100:14 105:4 118:12 158:7 161:9 165:20 165:22 166:3,7 166:20 168:3 173:17 200:3,4 202:13,13,14 205:12 230:9
4,253,597 3:11
40 23:7 236:11
42 92:5 170:14,18

239:16
438 212:21,22
44 118:21 184:21 184:21
46 62:8
47 239:10
48 100:6,15 115:7

5

5 3:9,10,13 11:19 176:2 217:13 218:1
5,000 137:2
50 70:5,9 236:21 236:21
50-cent 192:11
52 239:10
521-CV-06113 6:18
53 239:10
54 194:22
55 195:22
56 127:7 138:21
58 154:15,21 156:11,15 158:12,15

6

6 153:8,15 154:4 155:15,17 173:17 175:20 185:14 200:13
60 227:21
60654-3406 2:7
61 85:4
63 219:20
64 3:11
67 145:19
69 84:22,22 185:13

7

70 188:7
70s 31:15,21
717 1:15 2:16 243:9 244:2
720)689-0679 2:18
76 3:12 144:21
78 209:13

8

8 47:16 78:21 89:13 138:14 152:1,16,20,21 153:3,11,15 157:22 160:3 160:10,16 161:13,15 162:2,11 163:1 163:2 164:19 165:6 166:10 166:12,21 167:3,3,10 168:12 175:19 175:20 176:4,4 176:4 200:13 239:2 240:15
80202 1:16 2:17 244:2
80s 26:3 30:12 31:21
812 1:21 245:1 246:2
823 5:14 6:7,22 16:11 21:14 41:22 42:2,12 42:14 43:13 46:22 47:5 51:9 51:15 52:18 54:11,17,20 55:16 75:20 76:18 79:9 85:19 87:1 116:21 145:14 240:15,20 241:10
83 184:18,20 188:4
86 81:8
88 119:21
89 120:17 208:13 208:15

9

9 173:17 176:5 200:16 239:1 240:14
9:06 1:17
90s 30:13

APPENDIX A

US 20160023370A1

(19) United States

(12) Patent Application Publication

Müller

(10) Pub. No.: US 2016/0023370 A1

(43) Pub. Date: Jan. 28, 2016

(54) **UNREELING DEVICE FOR AN INTERLEAVER REEL, AND SYSTEM CONSISTING OF A SLITTING DEVICE AND THE UNREELING DEVICE**

(71) Applicant: **GEA Food Solutions Germany GmbH**, Biedenkopf-Wallau (DE)

(72) Inventor: **Ralf-Peter Müller**, Kempten (DE)

(73) Assignee: **GEA Food Solutions Germany GmbH**, Biedenkopf-Wallau (DE)

(21) Appl. No.: **14/773,854**

(22) PCT Filed: **Mar. 20, 2014**

(86) PCT No.: **PCT/EP2014/055600**

§ 371 (c)(1),
(2) Date: **Sep. 9, 2015**

(30) **Foreign Application Priority Data**

Mar. 20, 2013 (DE) 10 2013 204 956.0

Publication Classification

(51) **Int. Cl.**

B26D 7/32	(2006.01)
B65H 35/06	(2006.01)
B65H 26/00	(2006.01)
B65H 16/02	(2006.01)
B65H 23/04	(2006.01)

(52) **U.S. Cl.**

CPC ***B26D 7/325*** (2013.01); ***B65H 16/023*** (2013.01); ***B65H 23/04*** (2013.01); ***B65H 26/00*** (2013.01); ***B65H 35/06*** (2013.01)

(57) **ABSTRACT**

The present invention relates to an unreeling device, by way of which an interleaver strip is unreeled from an interleaver reel. Furthermore, the present invention relates to a system consisting of a slitting device and the unreeling device.

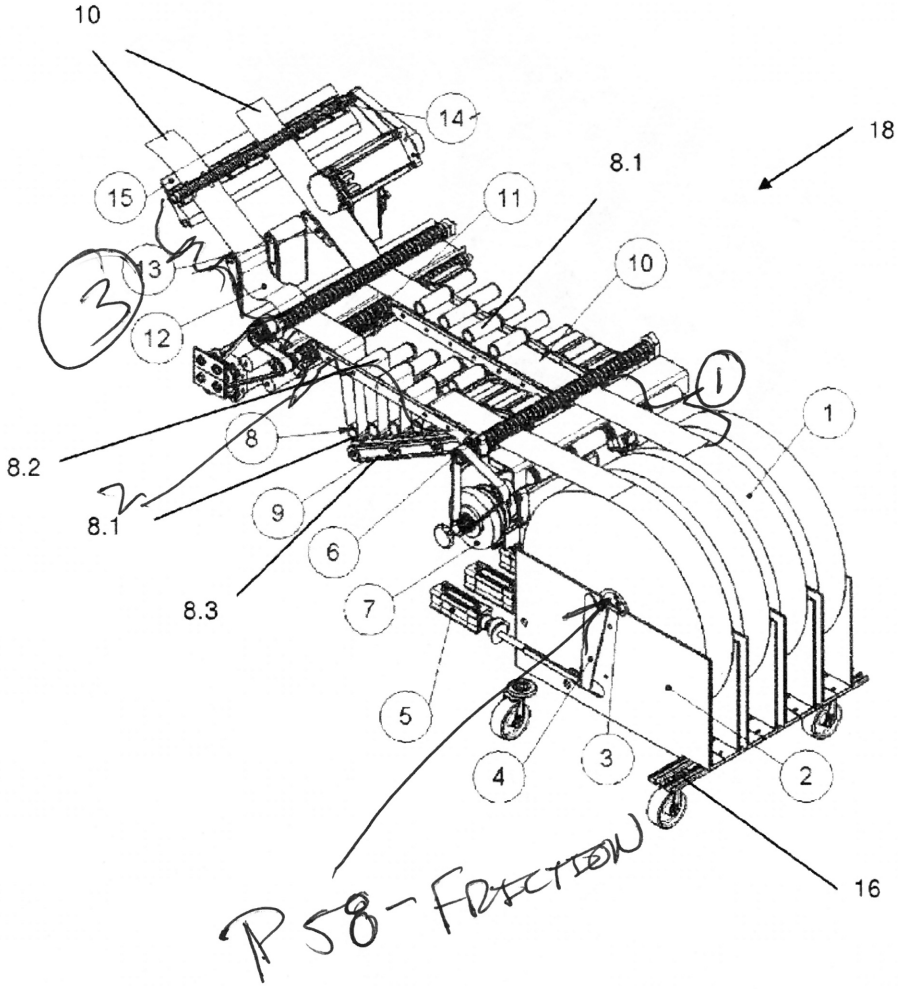

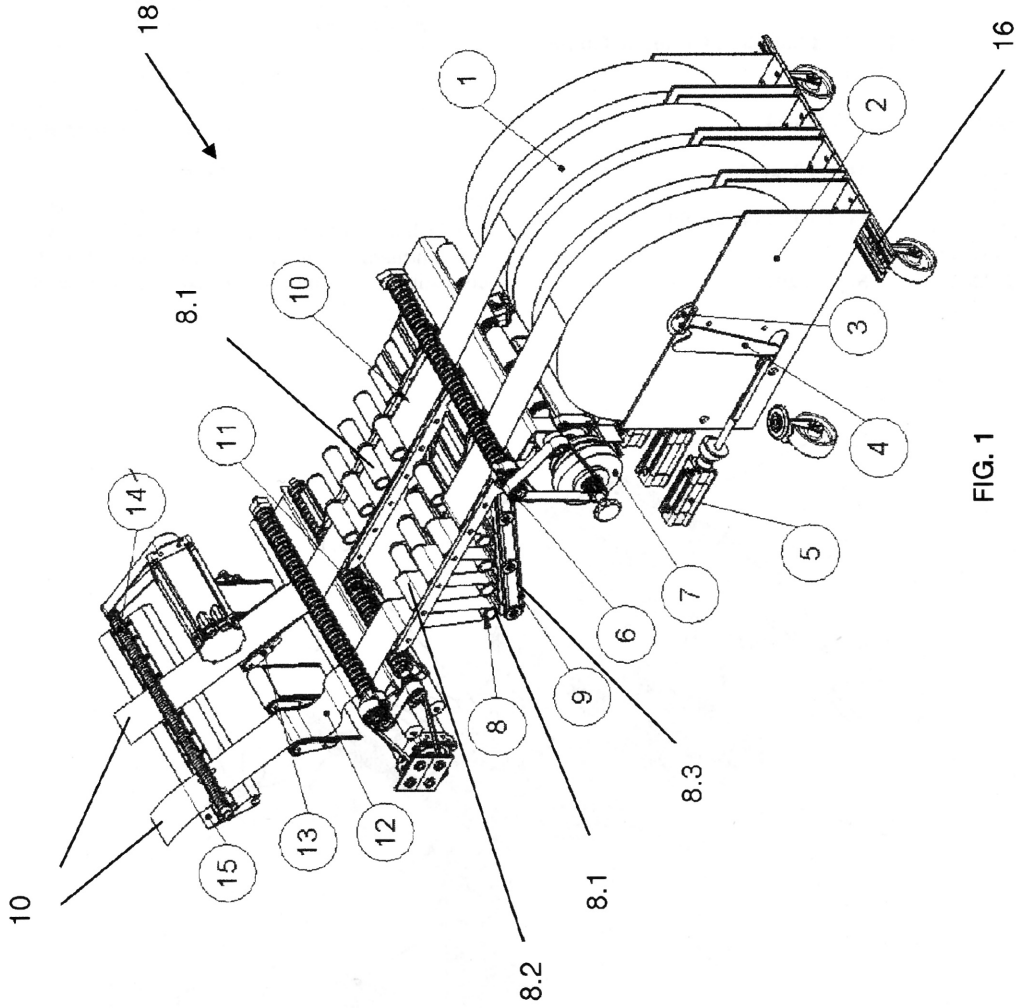

FIG. 1

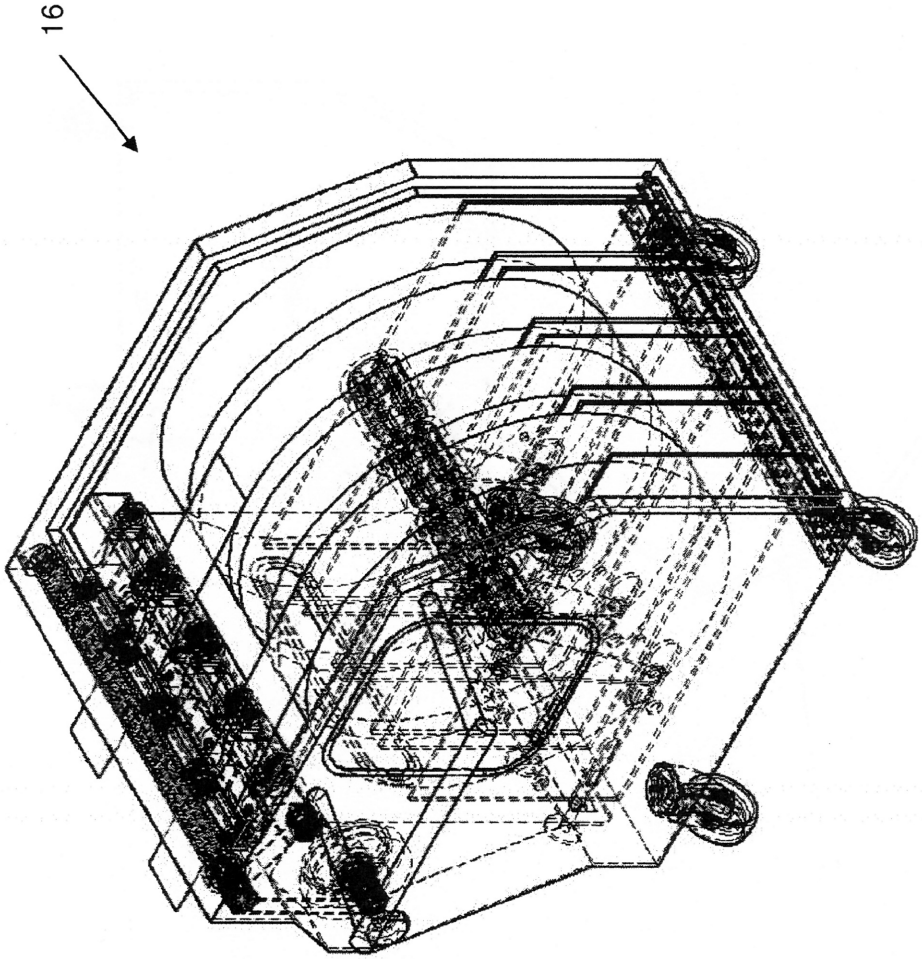

FIG. 2

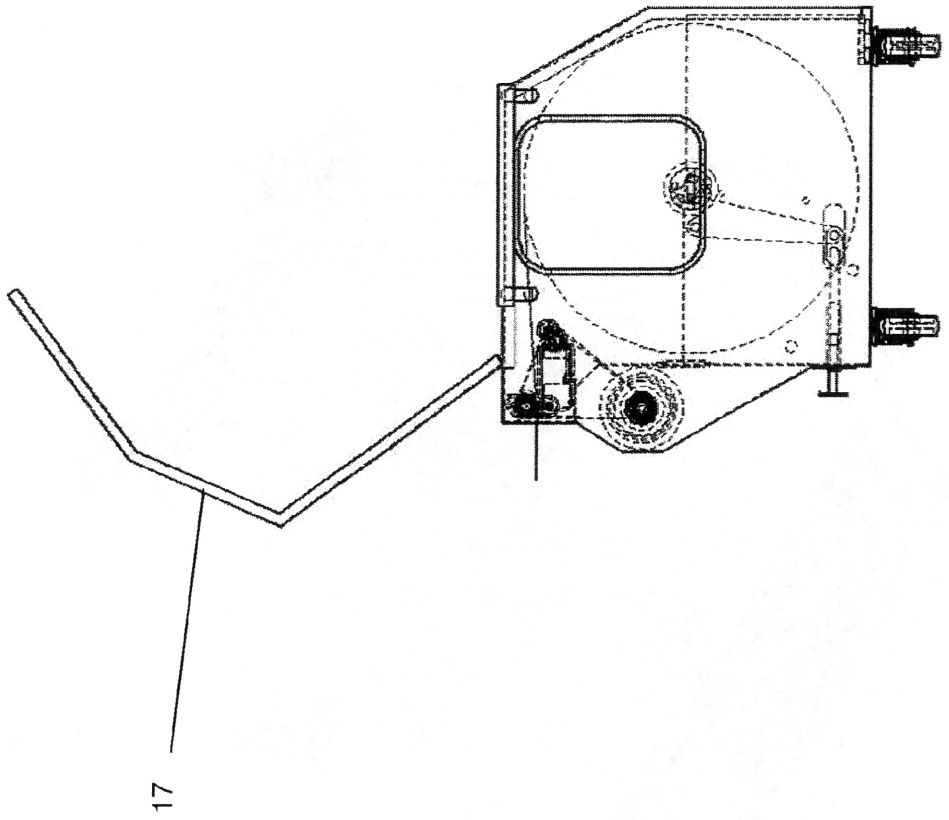

FIG. 3

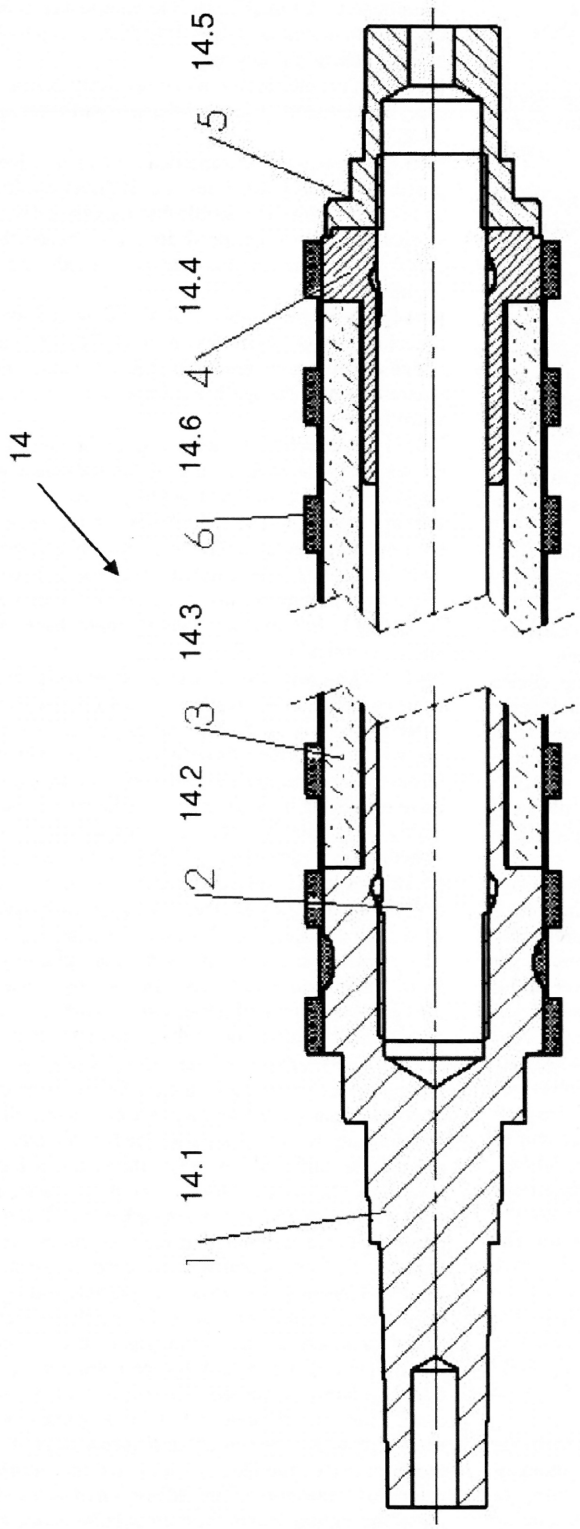

FIG. 4

UNREELING DEVICE FOR AN INTERLEAVER REEL, AND SYSTEM CONSISTING OF A SLITTING DEVICE AND THE UNREELING DEVICE

[0001] The present invention relates to an unreeling device with which an interleaver strip is unreeled from an interleaver reel. Furthermore, the present invention relates to a system comprising a cutting device and the unreeling device.

[0002] Interleavers, for example pieces of paper, are placed between two slices or food, for example, in order to reduce the adhesion thereof to one another, and are known from the prior art, for example from BP 1 940 685 B1. This insertion is carried out generally as a product is cut up into a multiplicity of slices of food, by the interleaver being cut off from an interleaver strip, preferably substantially simultaneously with the respective slices of food. The interleaver then falls together with the respective slice of food, for example onto a deposit table, on which a plurality of slices of food are configured to form a portion. Nowadays, the cutting devices are normally provided in multi-track form, i.e. a plurality of products are at least partly cut up simultaneously, so that an interleaver strip has to be provided per track.

[0003] Since the interleaver reels are finite, they have to be replaced from time to time, which was very complicated in the past.

[0004] It was therefore the object of the present invention to reduce the outlay when changing the interleaver reels.

[0005] The object is achieved with an unreeling device which has a multiplicity of cartridges, in which an interleaver reel is rotatably mounted in each case and the interleaver reel rotates as it is unreeled, the interleaver reel being braked automatically as necessary.

[0006] The explanations given in relation to this subject of the present invention apply equally to the system according to the invention and vice versa.

[0007] The present invention relates to an unreeling device for a plurality of interleaver reels. For this purpose, the unreeling device has a plurality of cartridges, in which preferably respectively one interleaver reel is rotatably mounted per cartridge. The interleaver reel rotates as the interleaver strip is unreeled. The cartridges are preferably arranged parallel to one another on the unreeling device and can be removed from the latter, preferably respectively individually. The unreeling device is preferably not a part of the cutting device but can be moved independently of the latter. The unreeling device preferably has rollers or the like, on which said device can be moved toward the cutting device and away from the latter.

[0008] Each cartridge provides the interleaver strip for one track of the cutting device, in which a product, for example a block of sausage, cheese or ham is respectively cut up. The cutting speed of the respective product in the respective track can be the same or different.

[0009] As soon as an interleaver reel has been used up, either this reel or the respective cartridge in which the used-up interleaver reel is located can be replaced, alternatively, however, the entire unreeling device can also be replaced as soon as at least one interleaver reel has been used up.

[0010] According to the invention, the respective cartridge has no brake, instead the interleaver reel is braked automatically as soon as there is no need for interleaver strip, for example when a product change is taking place in the cutting device.

[0011] The braking of the interleaver reel is preferably carried out by means of an appropriate frictional pairing between the interleaver reel, and the shaft on which the interleaver reel is mounted. Astonishingly, the interleaver reel is consequently not mounted with as little friction as possible; instead a certain friction is desired.

[0012] The interleaver reel preferably has a paperboard core, which rotates on a rigid shaft, in particular an aluminum shaft.

[0013] Preferably, the interleaver reel is driven as far as possible without momentum, i.e. is driven as slowly as possible -with the lowest possible fluctuations and without peaks, so that the unreeling speed does not exceed the transport speed of the interleaver strip or exceeds the same only slightly.

[0014] A further subject of the present invention is an unreeling device which has a multiplicity of cartridges, in which an interleaver reel is rotatably mounted, in each case, wherein each cartridge has a braking means which is activated individually.

[0015] Preferably, the torque of the brake is a function of the weight of the reel, i.e. the further the consumption of the respective interleaver reel has progressed.

[0016] In a preferred embodiment of the present invention, the unreeling device and/or the respective cartridge has no dedicated drive for the interleaver reels and/or no drive for the respective braking means. As a result, the unreeling device according to the invention can be implemented very simply and economically.

[0017] The drive for the interleaver reels and/or for the braking means of the respective cartridge is preferably provided by the cutting device. For example, the cutting device has a rotary or linear drive per cartridge, which drives the respective braking means. Preferably, the cutting device has a drive for all the interleaver reels, wherein, particularly preferably, the respective interleaver reel can be connected individually to this drive, for example by a magnetic coupling.

[0018] A further subject of the present invention is a system comprising a cutting device, in which a knife severs slices of food from a block of food, which slices are arranged, at least partly overlapping, to form a portion of a plurality of slices of food, therein an interleaver (**10**) is respectively provided between two slices of food, and comprising an unreeling device as claimed in one of the preceding claims.

[0019] This subject of the present invention relates to a cutting device with which blocks of food, for example blocks of cheese, sausage and/or ham, are cut up into slices of food. For this purpose, the cutting device has, for example, a rotating cutting knife, which severs the slices of food from the front end of the block of food. Here, the cutting knife interacts with what is known as a cutting edge, which functions as an opposing knife and, together with the cutting knife, defines the so-called cutting plane. Provided between the cutting knife and the cutting edge is an adjustable cutting gap, which should be as small as possible, in order to prevent the slices being "chopped off". The cutting gap must however be sufficiently large that contact between cutting knife and cutting edge is reliably prevented. The cutting knife is arranged on a rotor. This rotor is preferably what is known as an idle cut rotor, with which the cutting knife is spaced axially apart from the front end of the block of food and the cutting plane, for example to transport a finished portion of slices of food away out of the cutting area of the cutting knife. In the spaced-apart position, the cutting knife continues to rotate with an unchanged rotational speed but does not sever any slices of food from the block of food. This movement of the cutting

knife is designated an "idle cut". As soon as the outward transport of the portion of slices of food has been completed, the cutting knife is moved back into the cutting plane again and the cutting device is continued. The cutting device has a plurality of tracks, which each have a dedicated drive that transports the product to be cut up in the direction of the cutting knife. With this forward drive, the thickness of the respective slice of food to be cut off is determined, corresponding to the forward drive of the respective product between two cuts. The forward drive can be different for each track, so that the respective products can also be cut up at different speeds.

[0020] Consequently, the consumption of the respective interleaver reel and the drive thereof can also be different.

[0021] The slices of food that are cut off are configured to form portions of a plurality of slices of food, wherein the slices of food of a portion at least partly overlap. For instances, the slices of food are stacked or shingled. An interleaver, for example a piece of paper, is arranged respectively between two slices of food and/or between portion and a support, in order to reduce the adhesion between the slices of food and/or a package.

[0022] This interleaver is preferably cut off, by the same knife which exits off the slices of food, from an interleaver strip which, for this purpose, is preferably inserted intermittently into the cutting place as soon, as the knife is no longer located in the area of the interleaver strip outlet. This insertion must then be completed at the latest when the knife enters the area of the interleaver strip outlet again. The insertion of the interleaver strip is preferably carried out individually for each track of the cutting device.

[0023] Preferably, a means which respectively drives the braking means of a cartridge is provided on the cutting device. This embodiment of the present invention has the advantage that each interleaver reel can be unreeled at an individual speed. In addition, the unreeling device does not have to have a drive for the brake of the respective cartridge, so that the latter can be designed more simply and more easily.

[0024] Preferably, the system according to the invention, in particular the cutting device, has a sensor which respectively determines the interleaver reel circumference. By using the signal from this sensor, for example, the drive of the braking means and/or the drive means for the respective interleaver reel can be controlled. In addition, by using this signal, the progress of the consumption of the respective interleaver real can be monitored and, for example, a replacement can be initiated in good time.

[0025] Preferably, the cutting device has a drive for the interleaver reels, which it rotates in order to unreel the interleaver strip. Particularly preferably, the number of drive moans is smaller than the number of interleaver reels which have to be driven. Quite particularly preferably, only one drive is provided for all the interleaver reels. Preferably, between the drive and the respective interleaver reel there is provided a coupling, which can be activated as desired and with which the respective interleaver reel can optionally be driven. As a result, the time period and/or the speed at which the respective interleaver reel is driven can be adjusted individually.

[0026] Preferably, at least two accumulators per interleaver strip are provided between the interleaver reel and the location at which the interleaver strip is inserted into the cutting plane. These accumulators preferably have different storage capacities, a buffer having a small storage capacity preferably being provided upstream of the insertion location in relation to the transport direction of the interleaver strip, and a further accumulator with a higher storage capacity preferably being provided upstream of the first buffer in relation to the transport direction of the interleaver strip. By means of the buffers, damage, in particular tearing of the interleaver strip, is prevented and/or the unreeling of the interleaver reels can be evened out, at least somewhat. At least one of the two buffers, preferably both buffers, is/are provided for each track and independently of each other.

[0027] Preferably, each buffer having the higher storage capacity has a dancer, which is preferably provided with position sensing, the signal from which is used to control the unreeling of the interleaver reel of the respective track. Preferably, rollers are provided on the dancer and the buffer additionally has farther stationary rollers. The interleaver strip is led around the rollers on the dancer and around the stationary rollers.

[0028] Preferably, the dancer has a drive, with which the position thereof can be changed independently of the interleaver strip. Therefore, the dancer can for example be moved into a threading position, which it assumes when a new interleaver strip is introduced into the system.

[0029] Preferably, the dancer has a drive, for example a belt, with which at least one roller of the buffer can be driven, in particular when the dancer is located in its threading position.

[0030] Preferably, the dancer is a multiple dancer, i.e. it has a plurality of rollers around which an interleaver strip respectively wraps. As a result, the buffer has a higher buffer capacity.

[0031] As a rule, the system, in particular the cutting device, has a guide for the interleaver strip, along which said strip is guided on its path from the interleaver reel as far as the insertion area. Preferably, this interleaver strip guide is provided so as to be partially movable, in particular pivotable, so that the length thereof can be changed. This change is made, in particular, in the area of the first buffer. As a result, the path of the interleaver strip can be lengthened or shortened. Preferably, the interleaver guide is shortened, is particular when threading the interleaver strip, and then lengthened again.

[0032] Preferably, the cutting device has docking means her the unreeling device, which ensure that the unreeling device is located in a defined position relative to the cutting device. This docking device preferably acts in two or three spatial directions which, in particular, are provided at an angle of 90° to one another. Particularly preferably, the cutting device and/or the unreeling device has/have means which fix the unreeling device as soon as the latter has assumed the defined position.

[0033] A still further subject of the present invention is a method for unreeling an interleaver reel, in particular by using the system according to the invention, wherein as the interleaver reel is unreeled, a buffer is operated such that, in the event of as emergency stop, it buffers the overrun of the reel.

[0034] The disclosure mad in relation to this subject of the present invention applies equally to the other subjects of the present invention and vice versa.

[0035] According to the invention, in the method according to the invention a buffer which is provided downstream of the interleaver reel for the interleaver strip is operated in such a way that it compensates for a difference between the unreeling speed and the consumption of the interleaver strip but at the same time has a residual buffer capacity that is sufficiently

large that, in the event of a necessary stop, it buffers the overrun of the interleaver reel, which is braked only by friction.

[0036] Preferably, the unreeling of the interleaver reel is carried out at least virtually without momentum, i.e. the third derivative of the distance/time graph of the interleaver strip is zero or virtually zero.

[0037] A further subject of the present invention is a cutting device, with which a product is cut up into a multiplicity of slices of food, in which the product is transported in the direction of a moving, preferably rotating, knife, which severs the slices of food from the front end of the product, which slices fall onto a supporting surface and are configured there to form portions of a plurality of slices of food, characterised in that at least one, preferably moving, part of the cutting device at least partly made of a material with a high strength and preferably a comparatively low density, in particular of ceramic, is provided.

[0038] The disclosure made in relation to this subject of the present invention applies equally to the other subjects of the present invention and vice versa.

[0039] The present invention relates to a device for cutting up products, in which at least one part made of a material with a high strength and preferably a comparatively low density, at least partly, is provided. Preferably, this is a moving, for example rotating, component which, quite particularly preferably, is driven intermittently. Further preferably, the part is provided so as to be very stiff and is particularly preferably subjected to very high accelerations.

[0040] Preferably, the part is at least partly made of ceramic. In particular, this is a ceramic with a comparatively low density, for example SiC or SiSiC or Al_2O_3.

[0041] Preferably, the part, in particular the part made of ceramic, is prestressed, in particular prestressed in compression.

[0042] Furthermore, the ceramic part is preferably connected to another part by an integral connection, in particular by adhesive bonding.

[0043] Preferably, the ceramic part is provided on the outer circumference of a rotating component.

[0044] The inventions will be explained below by using FIGS. **1** to **4**. These explanations are merely exemplary and do not restrict the general idea of the invention.

[0045] FIG. **1** shows the system according to the invention.

[0046] FIGS. **2** and **3** each show illustrations of the unreeling device according to the invention.

[0047] FIG. **4** shows the drive shaft for the interleaver strip.

[0048] FIG. **1** shows, schematically, the system according to the invention. This comprises a cutting device and the unreeling device **16**. The cutting device in the present case has four tracks, into which it is respectively possible to insert a product which is transported in the direction of a cutting knife, for example a rotating cutting knife, which severs slices of food from the front end of the product. The feed rate of the products per track can thus be different. The slices cut off fall, for example, onto a deposit table and are configured there to form portions of a plurality of slices. For example, the portions are arranged as stacks or as shingled portions. According to the invention, provision is now made for a so-called "interleaver" to be placed between two slices in each case. The interleaver is, for example, paper, in particular coated paper or a film, which reduces the adhesive forces between two slices of food. As a result, it becomes simpler for the user to separate a slice of food from the portion. The interleaver is provided as interleaver strip **10**, which are preferably inserted intermittently into the cutting plane of the knife which severs the respective interleaver from the interleaver strip. The interleaver that is cut off falls onto the deposit table together with the slice that is being cut off. An interleaver strip is provided for each track. Each interleaver strip **10** of the respective track is unreeled from an interleaver reel, here a paper reel, which is respectively provided in a cartridge **2**. The cartridges **2** are arranged beside one another on the unreeling device **16**. In the present case, the unreeling device **16** has rollers, with which it can be rolled to the cutting device. Each cassette **2**, which is provided in the shape of a U in the present case, has a rotary bearing for the interleaver reel and a braking means **3**, for example a brake blade **3**, which brakes the respective interleaver reel as desired. Preferably, the braking torque here depends on the progress of the consumption of the respective interleaver reel. For example, the cutting device has a sensor which monitors the progress of the consumption of each interleaver reel **1**. Preferably, the unreeling device **16** has no dedicated drive for the interleaver reels and/or no dedicated drive for the respective braking means. As a result, the unreeling device can be provided very simply and economically. Those skilled in the art will understand that, preferably, each interleaver reel has its own braking means, so that said reels can be braked individually and independently of the other reels. The drive **6**, **7** of the interleaver reels and/or the drive **5** of the brakes is preferably provided on the cutting device. The fact that the unreeling device according to the invention preferably has no dedicated drive means that said device can be implemented very simply and has a low weight, which is advantageous for the onward movement of the unreeling device by a worker. The drive **5** of the brake of the respective film reel in the present case is a brake cylinder, which drives a lever **4** which in turn interacts with the brake blade and brakes the respective film reel. The interleaver reels in the present case have a common drive **6**, wherein the torque provided by the drive is transmitted to the respective interleaver reel as desired by means of a magnetic coupling. Thus, each reel can be driven individually, in order, for example, to control the buffered interleaver strip length per track individually and/or to be suitable for the different cutting speed per track. As can be seen in particular by using the left-hand interleaver strip, after the interleaver strip has been unreeled from the reel, it runs through a buffer **8**, in which interleaver strip material is buffered. In the present case, this buffer **8** is by way of stationary rollers **8.2** and movable rollers **8.1** which, in the present case, are provided rotatably on a dancer **8.3**. The dancer **8.3** is provided on the cutting device, rotatably here, and preferably has a sensor with which one position thereof can be established, so that the signal from this sensor can be used to control the drive **6**, **7** of the respective interleaver reel. The dancer preferably has a drive **9**, for example a belt, in particular a tangential belt, which, driven by a drive **11**, can run around the dancer. This drive **11** can set the stationary rollers **8.1** rotating, which is advantageous in particular when threading a new inter leaver strip, which in the illustration according to FIG. **1** is currently taking place in the right-hand interleaver strip **10**. The drive for the tangential belt is the drive means **11**, a roller here, which is able to interact with the drive of the dancer when the latter is in its non-buffering position, the horizontal position here, and the interleaver strip moves through the buffer **8** without any turns. Provided downstream of the first buffer **8** is a further buffer **12**, a loop here, which preferably has a substantially lower

capacity than the buffer **8** and preferably buffers only as much interleaver material as is needed for the ejection of an interleaver. The length of the loop is preferably monitored, in particular by a contacting sensor. This buffer **12** preferably has an interleaver strip guide **13**, which is provided so as to be movable and which is able to enlarge or reduce the path of the interleaver strip. In the present case, this guide is a plane, which is provided such that it can rotate on the cutting device and which can be moved from a buffering position (left-hand interleaver strip) in to a non-buffering position (right-hand interleaver strip). Also provided downstream in relation to the direction of movement of the interleaver strip, preferably immediately adjacent to the cutting plane, is an interleaver ejection roller **14** on an interleaver ejection unit **15**. Preferably, the roller is a roller having a very low weight, for example a ceramic or steel roller, which has a very low mass moment of inertia with a high stiffness. As a result, it is possible to insert the interleaver strip into the cutting plane with a very high acceleration.

[0049] According to another subject of the present invention, not shown, the reel of each cartridge has no braking means, instead is mounted in the cartridge such that there is deliberately so much friction that, in the event of a consumption stop or a reduction in consumption of the interleaver strip, the reel overruns only so slightly that the excess can be shored in the buffer **8**. The buffered interleaver strip can then be used to accelerate the interleaver reel as far as possible without momentum in the event of an increase in demand. For example, each cassette has a rigid shaft made of metal, preferably of aluminum, on which the core, in particular a core of paperboard, rotates. This frictional pairing is sufficient to be able to operate the cartridge without any brake.

[0050] FIG. **2** shows the unreeling device according to the invention which, in the present case, has four cartridges, in each of which an interleaver reel **1** is rotatably mounted. Each cartridge has its own braking means, but which has no drive. Each cassette can be provided on the unreeling device such that it can be mounted/dismounted individually. The cartridges can be loaded with an interleaver reel and then mounted on the unreeling device. Preferably, the distance between the cartridges is adjustable. Preferably, the unreeling device has a sensor which monitors the progress of the consumption of the individual interleaver reel and in particular is connected to the open-loop/closed-loop control system of the system according to the invention, which outputs an appropriate signal as necessary when one or more cartridges have to be replaced or refilled. The unreeling device according to the invention preferably has no type of power supply. Preferably, means are provided in the unreeling device in order to connect the unreeling device to the cutting device and/or to achieve an exact alignment of the unreeling device relative to the cutting device, so that a reliable drive of the interleaver reels, a secure connection, to the braking means and/or twist-free unreeling of the interleaver material are possible. Preferably, the cutting device has a sensor which establishes that the unreeling device is decked correctly on the cutting device.

[0051] As can be gathered in particular from FIG. **3**, the unreeling device **16** according to the invention can be covered by a folding cover **17**. As a result, the device according to the invention satisfies the hygienic requirements in an operation processing foodstuffs.

[0052] FIG. **4** shows an example of part of a cutting device which is at least partly produced from a high-strength material. In the present case, this is the interleaver strip ejector roller, which inserts the interleaver strip or strips between two slices of food. This is carried out intermittently and the respective interleaver strip must be inserted very quickly, so that the interleaves strip ejector roller is intermittently subjected to very high acceleration. The interleaver strip ejector roller in the present case has a rotary bearing, here a shaft journal **14.1**, which is preferably made of metal, in particular of steel. The rotary bearing preferably has a seat for a ceramic sleeve **14.3**, wherein the ceramic sleeve is particularly preferably connected integrally to the seat, in particular by adhesive bonding. Provided within the ceramic sleeve in the present case is a tie rod **14.2**, with which the ceramic sleeve can be prestressed in compression, so that the stiffness thereof, in particular against deflection, is increased. The tie rod interacts firstly with the bearing **14.1** and secondly with a pro-stressing nut **14.5**, which at the same time acts as a bearing which is located opposite the bearing **14.1**. Provided between the pre-stressing nut **14.5** and the ceramic sleeve **14.3** here is an adapter **14.4**, which is preferably likewise connected integrally to the sleeve. The adapter **14.4** is preferably made of lightweight metal or plastic. Preferably provided on the circumference of the ceramic sleeve **14.3**, of the hearing **14.1** and/or of the adapter, in particular at least, in some sections, is a functional surface, for example a coating, e.g. a rubber coating or a plastic, preferably provided with a structured surface which, here, interacts frictionally with the interleaver strip.

[0053] The interleaver elector roller **14** described is used here for the interleaver strip ejection and is subjected, to extremely high accelerations with a slim design. Here, the interleaver ejector roller is about 600 mm long and only 40 mm in diameter. It must exhibit extremely high bending stiffness, since if is necessary to press on the paper over the entire width with a mating shaft.

[0054] Further uses of a part which is at least partly provided from ceramic are slim shafts for the portioning bands, wherein the transitions from hand to band must be kept as small as possible and therefore the shaft diameters are chosen to be the smallest possible. Nevertheless, shafts up to 600 mm long or mere are also needed here. Here, too, high acceleration is needed for the fast transport away of the portions.

[0055] A further application is the deflection rollers of the traction belts, i.e. the belts which guide the product toward the knife.

LIST OF DESIGNATIONS

[0056] **1** Interleaver reel, paper reels
[0057] **2** Cartridge
[0058] **3** Braking means, brake blade
[0059] **4** Lever
[0060] **5** Drive for the brakeing means
[0061] **6** Drive of the interleaver strip **10**
[0062] **7** Coupling
[0063] **8** Buffer
[0064] **8.1** Movable roller
[0065] **8.2** Stationary roller
[0066] **8.3** Dancer
[0067] **9** Drive, belt, tangential belt
[0068] **10** Interleaver strip
[0069] **11** Drive means, roller
[0070] **12** Buffer, loop
[0071] **13** Interleaver strip guide
[0072] **14** Interleaver ejector roller
[0073] **14.1** Bearing, shaft journal

[0074] **14.2** Pulling means, tie rod
[0075] **14.3** Supporting body
[0076] **14.4** Adapter
[0077] **14.5** Prestressing nut
[0078] **14.6** Functional surface
[0079] **15** Interleaver ejector unit
[0080] **16** Unreeling device
[0081] **17** Cover
[0082] **18** System

What is claimed is:

1. An unreeling device comprising:
a multiplicity of cartridges; and
an interleaver reel rotatably mounted in each cartridge,
wherein the interleaver reel in each cartridge rotates as an interleaver is unreeled therefrom, and
wherein the interleaver reels are braked automatically as necessary.

2. The unreeling device as claimed in claim **1**, wherein the interleaver reel in each cartridge has a core that rotates on a rigid shaft,
wherein the core is a paper core and the shaft is an aluminum shaft.

3. The unreeling device as claimed in claim **1**, wherein each of the cartridges has a braking means that is activated individually.

4. The unreeling device as claimed in claim **3**, wherein a torque of the braking means is a function of a weight of the interleaver reel in a corresponding cartridge.

5. The unreeling device as claimed in claim **1**, wherein the unreeling device is free of a drive for the interleaver reels.

6. A system comprising;
i. a cutting device including a knife that severs slices of food from a block of food, the slices are arranged so that the slices at least partly overlap to form a portion of a plurality of the slices of food,
wherein an interleaver is provided between two of the slices of food, and
ii. an unreeling device comprising:
one or more cartridges;
an interleaver reel rotatably mounted in each of the one the interleaver reel includes an interleaver,
wherein the interleaver reel is automatically braked with a braking means when there is no need for the interleaver.

7. The system as claimed in claim **6**, wherein the system includes a means that drives the braking means, which is provided on the cutting device.

8. The system as claimed in claim **6**, wherein the system has a sensor that determines a circumference of the interleaver reel.

9. The system as claimed in claim **6**, wherein the cutting device has a drive for the interleaver reel.

10. The system as claimed in claim **6**, wherein the system has at least two buffers per interleaver reel.

11. The system as claimed in claim **10**, wherein at least one of the buffers has a dancer.

12. The system as claimed in claim **6**, wherein the system includes an interleaver strip guide that is partly movable, pivotable, or both.

13. A method comprising:
unreeling an interleaver from an interleaver reel that is supported on an unreeling device,
wherein the unreeling device comprises a cartridge rotatably supporting the interleaver reel;
wherein the interleaver reel is braked automatically when there is no need for the interleaver, and
wherein as the interleaver reel is unreeled, a buffer is operated such that, in the event of an emergency stop, the buffer buffers an overrun of the interleaver reel.

14. The method as claimed in claim **13**, wherein the unreeling step is carried out at least virtually without momentum.

15. A cutting device, with which a product is cut up into a multiplicity of slices of food, in which the product is transported in a direction of a moving, rotating knife, which severs the slices of food from a front end of the product,
wherein the slices fall onto a supporting surface and are configured there to form portions of a plurality of the slices of food, and
wherein at least one moving part of the cutting device is at least partly made of a material with a high strength and low density ceramic.

16. The unreeling device as claimed in claim **1**, wherein the unreeling device includes at least one buffer.
wherein after the interleaver is unreeled from the interleaver ree;, the interleaver runs through the at least one buffer to buffer the interleaver.

17. The unreeling device as claimed in claim **16**, wherein when threading a new interleaver, the at least one buffer is moved so that the new interleaver is not buffered.

18. The unreeling device as claimed in claim **1**, wherein friction between the interleaver reel and a corresponding cartridge causes the interleaver reel to brake automatically when there is an interleaver consumption stop, or a reduction consumption of the interleaver.

19. The system as claimed in claim **11** wherein the dancer includes one or more stationary rollers and one or more movable rollers.
wherein after the interleaver is unreeled from a corresponding interleaver roller, the moveable rollers are moved so that the interleaver is buffered, and
wherein when threading a new interleaver, the moveable rollers are moved so that the new interleaver is not buffered.

20. The method as claimed in claim **13**, wherein the method includes a step of moving one or more rollers when threading a new interleaver so that the new interleaver is not buffered.

* * * * *