[19] Patent Office of the People's Republic of China

[11] Publication No.: CN 2225227Y

[12] Utility New Model Patent Description

[21] ZL Patent No.: 95216733.6

[51] Int. Cl[6]

[45] Publication Date: April 24, 1996

A61B 17/36

[22] Application Date: July 3, 1995 [24] Certificate Issuing Date: February 11, 1996

[21] Application No.: 95216733.6

[74] Patent Agency: Guangzhou Patent Firm

Agent: Cao Ke-fen

[73] Patent Holder: Guangzhou Medical Device Factory

Address: No. 212, Xingang West Road, Haizhu District, Guangzhou, Guangdong Province 510300 China

[72] Designers: Liang Xiao-ming, Liang Zhi-jian, and Gu Gen

Patent claims: 1 page; Description: 3 pages; Figures: 3 pages

[54] Name of utility new model: Electrode in radiofrequency therapy device - Radiofrequency gun

[57] Abstract

The present utility new model relates to a radiofrequency gun in a radiofrequency treatment device.

A radiofrequency gun comprises of a probe, a gun barrel, a gun handlebar, a switch, and a wire, wherein the probe is elastically clamped or thread connected to the gun barrel to form a detachable connection, or the probe forms a non-detachable integral structure with the gun barrel, the plug comes in various forms: A. a curved probe with a spherical treatment head; B. a straight probe with a spherical treatment head; C. a cubic treatment head; D. a treatment head in a conical cap shape; E. a treatment head with a semi-circular top shape. The radiofrequency treatment device can be used for the treatment of various diseases such as in the department of facial organs, gynecology, anorectal surgery, and dermatology.

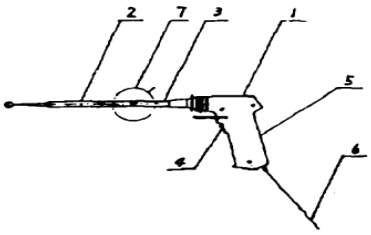

(BJ) No. 1452

NEURENT 1059

CLAIMS

1. A radiofrequency gun in a radiofrequency treatment device, comprising a treatment probe (2), a gun barrel (3), a metal wire (6), a switch (4), and a gun handlebar (5), wherein the probe (2) is elastically clamped or thread connected to the gun barrel (3) to form a detachable connection, or the probe (2) is fixed to the gun barrel (3) for form a non-detachable integral unit, the probe (2) comes in the shape of: A. the treatment head is spherical, and the probe sleeve (12) is a curved probe; B. the treatment head (11) is a spherical straight probe; C. the treatment head (11) is a cube; D. the treatment head (11) is a conical cap connected to a plane, with a spherical cone end; or E. the top surface of the treatment head (11) is semi-circular.

DESCRIPTION

Electrode in radiofrequency treatment device - Radiofrequency gun

The present utility new model belongs to the adjustment of the connection structure and state of a component in the radiofrequency treatment device.

The Chinese invention patent CN1067387A discloses a radiofrequency hemorrhoid treatment device for treating anal and rectal diseases. The invention was implemented by Guangzhou Medical Device Factory, and the product name is SHP-I radiofrequency hemorrhoid treatment device. The main unit of the SHP-I treatment device includes the power supply, radiofrequency signal generator, power amplifier circuit, timing device, power adjustment circuit, and other electrical components as described in CN1067387A. The electrode described in the invention patent is implemented in the product via a so-called radiofrequency gun, like a pistol. The radiofrequency gun consists of a metal treatment probe, a gun barrel, a switch, a gun handlebar, and a metal wire. The radiofrequency gun is in continuity with the SHP-I main unit via the metal wire. The radiofrequency electromagnetic waves generated by the main unit of the SHP-I radiofrequency hemorrhoid treatment device are transmitted to the treatment probe via the metal wire. The treatment head of the probe comes into contact with the patient's tissues to produce an internal thermal effect at a temperature up to 60°C - 80°C, which causes protein tissues to heat coagulate, dehydrate, shrink, harden, form blood clots, and gradually subside or disappear, leading to necrosis and detachment, achieving the purpose of treatment. However, the radiofrequency gun used in the SHP-I radiofrequency hemorrhoid treatment device has a treatment probe and gun barrel fixed as a whole, which cannot be installed or removed, and the form of the probe and the switch are only in a single straight shape, and the end face of the treatment head is circular in ϕ 8 mm, so it can only be used in anal and rectal surgery, and the cleaning and disinfection of the treatment probe are very inconvenient.

The purpose of the present utility new model is to extend the treatment range of the radiofrequency treatment device, such as use for the treatment of nasal hemangiomas, nasal polyps, vocal cord nodules, and small sarcoma on the ear in the field of facial organs; and various gynecological diseases such as cervicitis, polyps, and genital warts in dermatology.

The radiofrequency gun provided by the present utility new model is still composed of a treatment

probe 2, a gun barrel 3, a metal wire 6, a switch 4, and a gun handlebar 5. The probe 2 and the gun barrel 3 are elastically clamped or thread connected to form a detachable connection, which allows the replacement of the probe with different shapes based on the location, shape, and size of clinical lesions, or the probe 2 and the gun barrel 3 are manufactured to form a fixed, non-detachable whole structure, that is, the treatment probe of each shape is made in a radiofrequency gun. The shape and size of the treatment probe can be designed according to clinical needs. The treatment probe designed by the present utility new model has the following forms: A. The treatment head 11 is spherical, and the probe sleeve 12 is a curved probe with a curved shape; B. The treatment head 11 is a spherical straight probe; C. The treatment head 11 is a cube; D. The treatment head 11 is in a conical cap shape connected to a plane, with a spherical conical end; E. The top surface of the treatment head 11 is semi-circular.

The advantage of the present utility new model is that the radiofrequency treatment device can be used for multiple purposes, with the treatment range extended, and probes in different shapes can be selected for the radiofrequency gun according to the location, shape, and size of the lesion, or the treatment probe can be replaced. The radiofrequency gun with detachable probes is also convenient for cleaning and disinfection, which better meets the hygiene requirements for medical devices.

The present utility new model is specifically described below in conjunction with the figures for the embodiments:

Figure 1 shows the schematic diagram of the structure of the radiofrequency treatment device.

Legends in the figure: 1. Radiofrequency gun; 2. Treatment probe; 3. Gun barrel; 4. Switch; 5. Gun handlebar; 6. Metal wire; 7. Connection between the probe and the gun barrel. They can be elastically clamped (refer to Figure 2) or thread connected (refer to Figure 3), or the probe and the gun handlebar can be fixed in modes such as by welding to form a non-detachable connection as a whole.

Figure 2 shows the structural diagram of the elastic clamping connection between the treatment head and the gun barrel.

Figure 3 shows the structural diagram of the threaded connection between the treatment head and the gun barrel.

Legends in Figures 2 and 3: 8. Plug; 9. Socket; 10. Nut; 3. Gun barrel; 6. Metal wire.

Figure 4 shows the shape diagrams of various treatment probes.

Legends in the figure: 11. Treatment head; 12. Probe sleeve; 9. Plug.

Probe A: The treatment head is spherical, preferably with a size of ϕ 1-5 mm; the probe sleeve is curved, with a bending radius R of 25-30 mm. The optimal curved probe is one with an internal bending angle of 100°-125°.

Probe B: The treatment head is a spherical straight probe, and the size of the sphere is preferably ϕ 1-5 mm.

Probe C: The treatment head is a cube, which can be a square or a rectangular shape preferably with a side length of 2-6 mm.

Probe D: The treatment head is in a conical cap shape connected to a plane, with a spherical conical end, preferably with a cone degree of 16°-25° and a cone length of 13-20 mm.

Probe E: The treatment head surface is semi-circular, preferably with an outer circle of R 10-12 mm and an inner circle of R 4-6 mm.

There is a metal wire in the probe sleeve 12, which is welded to the treatment head 11 and the plug 9 at both ends and fixed in the probe sleeve. The outer part of the probe sleeve is wrapped with an insulating plastic layer.

Figures

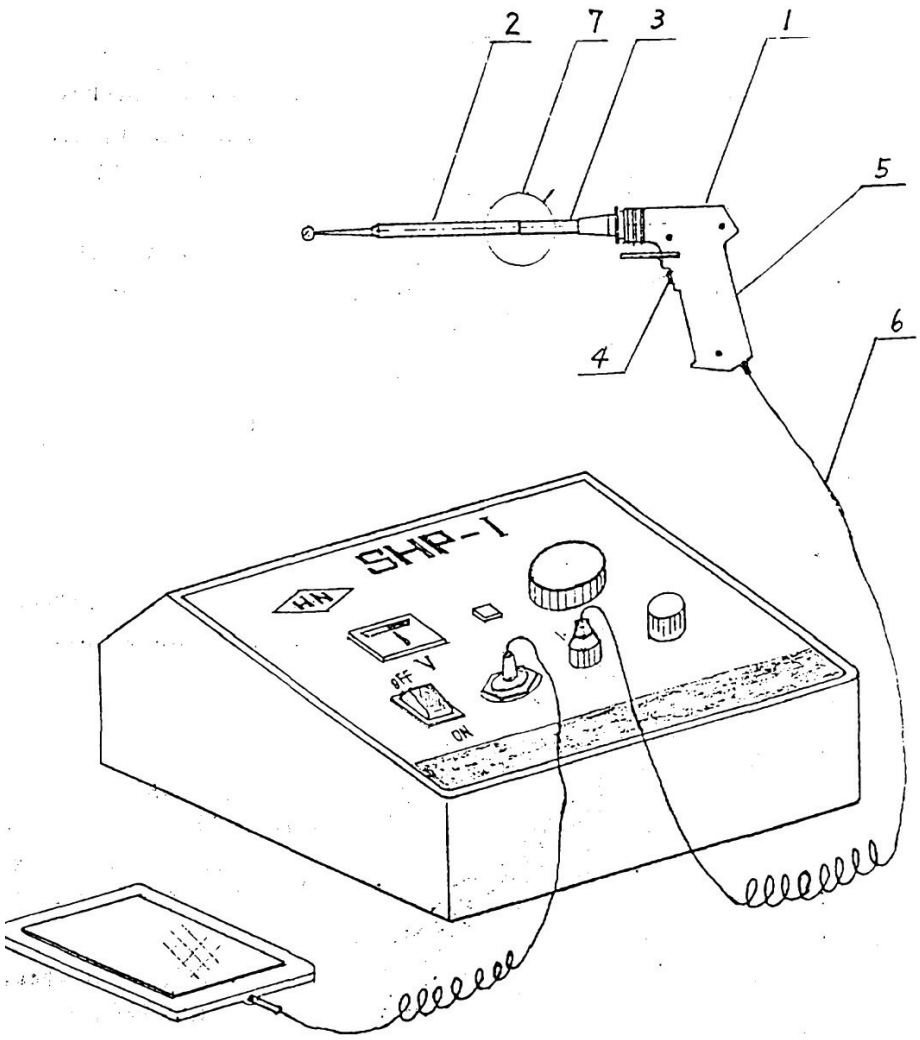

Figure 1

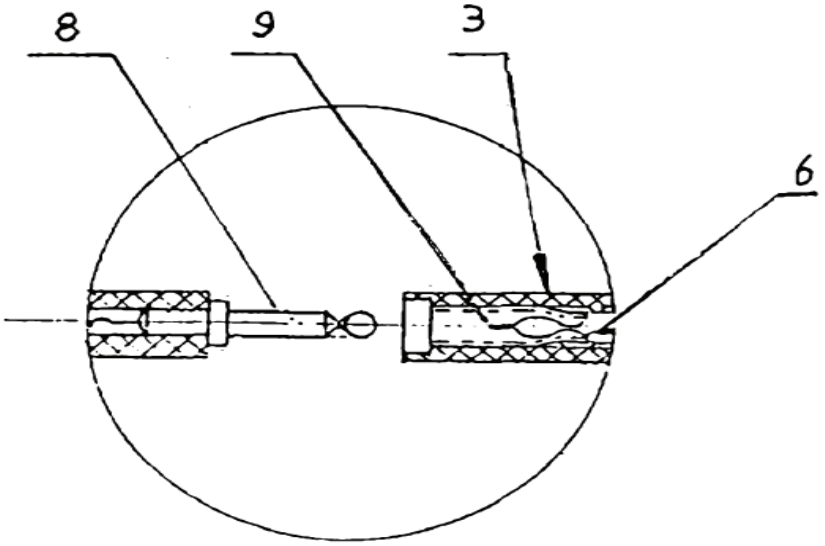

Figure 2

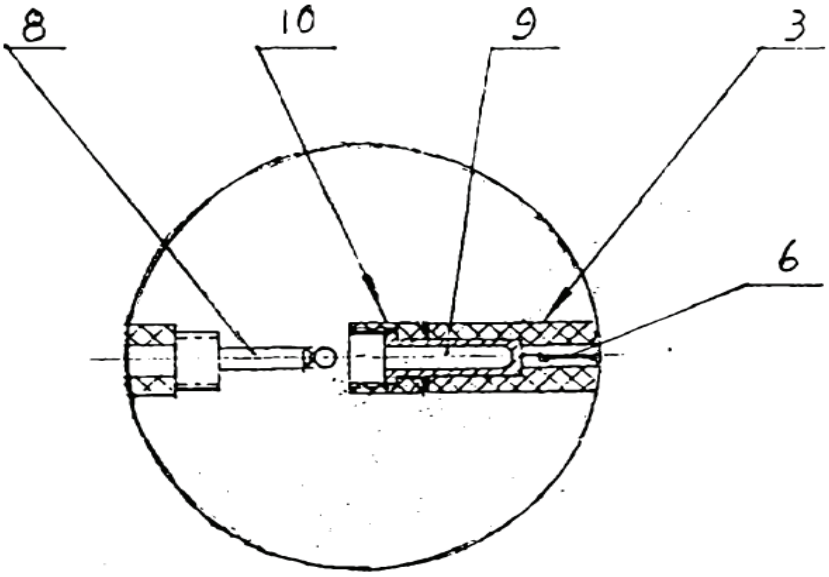

Figure 3

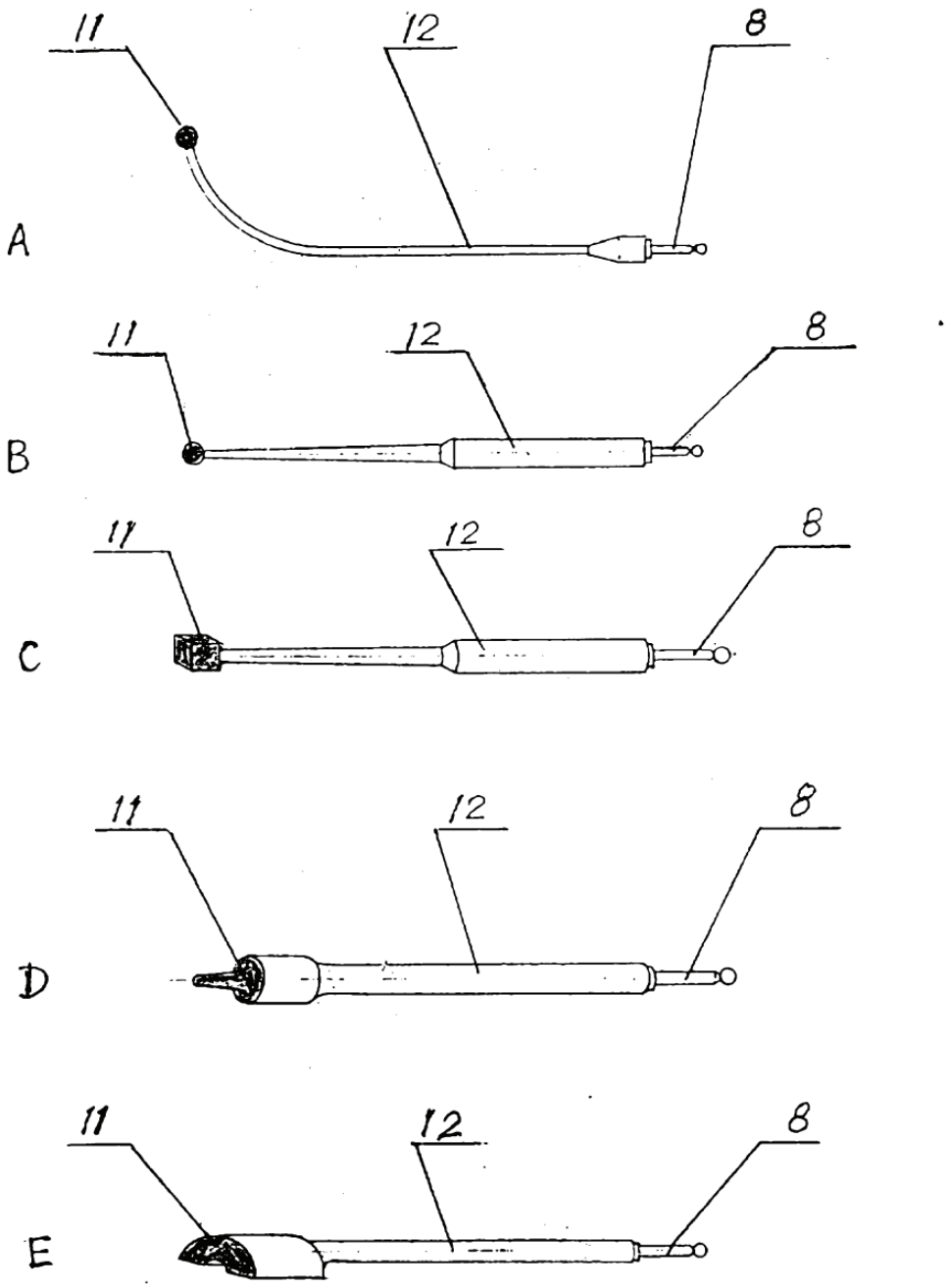

Figure 4