US011241271B2

(12) **United States Patent**
Wolf et al.

(10) **Patent No.: US 11,241,271 B2**
(45) **Date of Patent: *Feb. 8, 2022**

(54) **METHODS OF TREATING NASAL AIRWAYS**

(71) Applicant: **Aerin Medical Inc.**, Austin, TX (US)

(72) Inventors: **Scott J. Wolf**, Menlo Park, CA (US); **Andrew Frazier**, Sunnyvale, CA (US)

(73) Assignee: **Aerin Medical Inc.**, Sunnyvale, CA (US)

(*) Notice: Subject to any disclaimer, the term of this patent is extended or adjusted under 35 U.S.C. 154(b) by 305 days.

This patent is subject to a terminal disclaimer.

(21) Appl. No.: **16/514,316**

(22) Filed: **Jul. 17, 2019**

(65) **Prior Publication Data**

US 2019/0336196 A1 Nov. 7, 2019

Related U.S. Application Data

(63) Continuation of application No. 15/596,455, filed on May 16, 2017, now Pat. No. 10,398,489, which is a (Continued)

(51) **Int. Cl.**
A61B 18/14 (2006.01)
A61B 18/02 (2006.01)
(Continued)

(52) **U.S. Cl.**
CPC ***A61B 18/14*** (2013.01); ***A61B 18/02*** (2013.01); ***A61B 18/1206*** (2013.01);
(Continued)

(58) **Field of Classification Search**
CPC A61B 17/2816; A61B 17/320068; A61B 18/02; A61B 18/06; A61B 18/085;
(Continued)

(56) **References Cited**

U.S. PATENT DOCUMENTS

4,887,605 A 12/1989 Angelsen et al.
5,348,008 A 9/1994 Bomn et al.
(Continued)

FOREIGN PATENT DOCUMENTS

CN 101325919 12/2008
WO 199907299 2/1999
(Continued)

OTHER PUBLICATIONS

"Buckley et al., "High-resolution spatial mapping of shear properties in cartilage," J Biomech., Mar. 3, 2010;43(4):796-800, Epub Nov. 5, 2009".

(Continued)

Primary Examiner — George Manuel
(74) *Attorney, Agent, or Firm* — Merchant & Gould P.C.

(57) **ABSTRACT**

A device is described for treating a nasal airway by modifying a property of a nasal tissue of or near a nasal valve of the airway, without using a surgical incision or an implant, to decrease airflow resistance or perceived airflow resistance in the nasal airway. Various embodiments include an elongate shaft, a bipolar radiofrequency delivery member extending from one end of the shaft, and a handle attached to the elongate shaft at an opposite end from the radiofrequency delivery member. The radiofrequency delivery member is sized to be inserted into a nose and configured to at least temporarily deform the nasal tissue and deliver radiofrequency energy. The radiofrequency delivery member includes two rows of protruding electrodes disposed on a tissue contact surface, and the device is configured to deliver radiofrequency energy from one row of electrodes to the other row of electrodes.

16 Claims, 41 Drawing Sheets

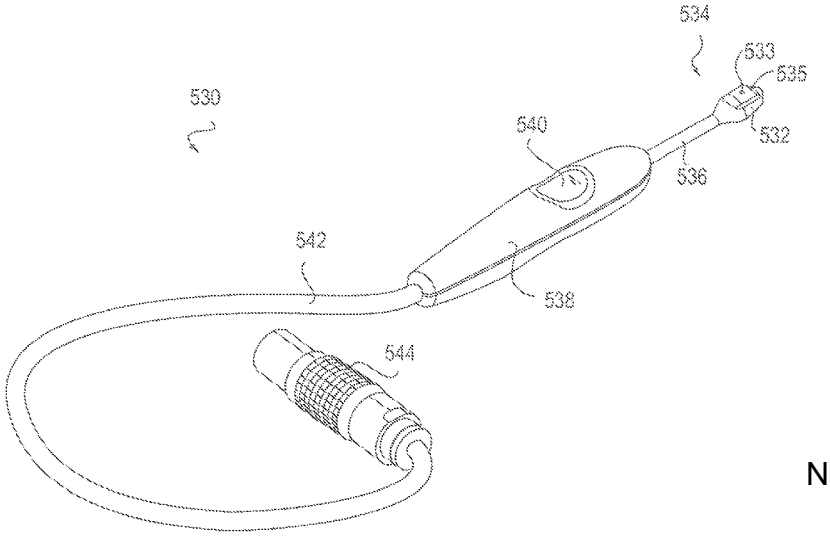

NEURENT 1001

Related U.S. Application Data

continuation of application No. 15/248,935, filed on Aug. 26, 2016, now Pat. No. 9,687,296, which is a continuation of application No. 14/864,428, filed on Sep. 24, 2015, now Pat. No. 9,433,463, which is a continuation of application No. 14/737,196, filed on Jun. 11, 2015, now Pat. No. 9,179,967, which is a continuation of application No. 14/607,639, filed on Jan. 28, 2015, now Pat. No. 9,179,964, which is a continuation of application No. 14/026,922, filed on Sep. 13, 2013, now Pat. No. 8,986,301, which is a continuation-in-part of application No. 13/495,844, filed on Jun. 13, 2012, now Pat. No. 8,936,594.

(60) Provisional application No. 61/603,864, filed on Feb. 27, 2012, provisional application No. 61/496,930, filed on Jun. 14, 2011.

(51) **Int. Cl.**

A61B 18/12	(2006.01)
A61N 1/40	(2006.01)
A61B 17/32	(2006.01)
A61B 18/16	(2006.01)
A61B 18/00	(2006.01)
A61B 17/24	(2006.01)
A61B 18/18	(2006.01)
A61B 18/20	(2006.01)
A61F 5/08	(2006.01)
A61B 5/01	(2006.01)
A61B 18/06	(2006.01)
A61B 18/08	(2006.01)
A61F 5/56	(2006.01)
A61N 5/02	(2006.01)
A61N 5/06	(2006.01)
A61B 17/28	(2006.01)
A61F 7/10	(2006.01)
A61N 7/02	(2006.01)

(52) **U.S. Cl.**

CPC ***A61B 18/1485*** (2013.01); ***A61N 1/403*** (2013.01); *A61B 5/01* (2013.01); *A61B 17/2816* (2013.01); *A61B 17/320068* (2013.01); *A61B 18/06* (2013.01); *A61B 18/085* (2013.01); *A61B 18/12* (2013.01); *A61B 18/1442* (2013.01); *A61B 18/1445* (2013.01); *A61B 18/1477* (2013.01); *A61B 18/16* (2013.01); *A61B 18/18* (2013.01); *A61B 18/1815* (2013.01); *A61B 18/20* (2013.01); *A61B 2017/248* (2013.01); *A61B 2017/32007* (2017.08); *A61B 2017/320069* (2017.08); *A61B 2018/00005* (2013.01); *A61B 2018/0016* (2013.01); *A61B 2018/0022* (2013.01); *A61B 2018/00023* (2013.01); *A61B 2018/0091* (2013.01); *A61B 2018/00178* (2013.01); *A61B 2018/00327* (2013.01); *A61B 2018/00577* (2013.01); *A61B 2018/00595* (2013.01); *A61B 2018/00642* (2013.01); *A61B 2018/00702* (2013.01); *A61B 2018/00708* (2013.01); *A61B 2018/00791* (2013.01); *A61B 2018/00821* (2013.01); *A61B 2018/00875* (2013.01); *A61B 2018/00886* (2013.01); *A61B 2018/00922* (2013.01); *A61B 2018/00982* (2013.01); *A61B 2018/00994* (2013.01); *A61B 2018/0212* (2013.01); *A61B 2018/0225* (2013.01); *A61B 2018/0262* (2013.01); *A61B 2018/126* (2013.01); *A61B 2018/1253* (2013.01); *A61B 2018/143* (2013.01); *A61B 2018/1425* (2013.01); *A61B 2018/1807* (2013.01); *A61B 2018/1861* (2013.01); *A61F 5/08* (2013.01); *A61F 5/56* (2013.01); *A61F 7/10* (2013.01); *A61N 5/025* (2013.01); *A61N 5/0603* (2013.01); *A61N 5/0625* (2013.01); *A61N 7/022* (2013.01); *F04C 2270/041* (2013.01)

(58) **Field of Classification Search**

CPC A61B 18/12; A61B 18/1206; A61B 18/14; A61B 18/1442; A61B 18/1445; A61B 18/1477; A61B 18/1485; A61B 18/16; A61B 18/18; A61B 18/1815; A61B 18/20; A61B 2017/248; A61B 2017/320069; A61B 2017/32007; A61B 2018/00005; A61B 2018/00023; A61B 2018/0016; A61B 2018/00178; A61B 2018/0022; A61B 2018/00327; A61B 2018/00577; A61B 2018/00595; A61B 2018/00642; A61B 2018/00702; A61B 2018/00708; A61B 2018/00791; A61B 2018/00821; A61B 2018/00875; A61B 2018/00886; A61B 2018/0091; A61B 2018/00922; A61B 2018/00982; A61B 2018/00994; A61B 2018/0212; A61B 2018/0225; A61B 2018/0262; A61B 2018/1253; A61B 2018/126; A61B 2018/1425; A61B 2018/143; A61B 2018/1807; A61B 2018/1861; A61B 5/01; A61F 5/08; A61F 5/56; A61F 7/10; A61N 1/403; A61N 5/025; A61N 5/0603; A61N 5/0625; A61N 7/022; F04C 2270/041

See application file for complete search history.

(56) **References Cited**

U.S. PATENT DOCUMENTS

5,533,499	A	7/1996	Johnson
5,542,916	A	8/1996	Hirsch et al.
5,611,798	A	3/1997	Eggers
5,624,439	A	4/1997	Edwards et al.
5,674,191	A	10/1997	Edwards et al.
5,707,349	A	1/1998	Edwards
5,718,702	A	2/1998	Edwards
5,728,094	A	3/1998	Edwards
5,730,719	A	3/1998	Edwards
5,733,280	A	3/1998	Avitall
5,738,114	A	4/1998	Edwards
5,743,870	A	4/1998	Edwards
5,743,904	A	4/1998	Edwards
5,746,224	A	5/1998	Edwards
5,800,429	A	9/1998	Edwards
5,807,306	A	9/1998	Shapland et al.
5,816,095	A	10/1998	Nordell, II et al.
5,817,049	A	10/1998	Edwards
5,820,580	A	10/1998	Edwards et al.
5,823,197	A	10/1998	Edwards
5,827,277	A	10/1998	Edwards
5,843,021	A	12/1998	Edwards et al.
5,843,077	A	12/1998	Edwards
5,846,235	A	12/1998	Pasricha et al.
5,879,349	A	3/1999	Edwards
5,938,659	A	8/1999	Tu
6,045,549	A	4/2000	Smethers et al.
6,096,033	A	8/2000	Tu et al.
6,102,907	A	8/2000	Smethers et al.
6,109,268	A	8/2000	Thapliyal et al.
6,126,657	A	10/2000	Edwards et al.
6,131,579	A	10/2000	Thorson et al.
6,139,546	A	10/2000	Koenig et al.
6,152,143	A	11/2000	Edwards
6,165,173	A	12/2000	Kamdar et al.

(56) **References Cited**

U.S. PATENT DOCUMENTS

6,179,803 B1 1/2001 Edwards et al.
6,210,355 B1 4/2001 Edwards et al.
6,228,079 B1 5/2001 Koenig
6,231,569 B1 5/2001 Bek et al.
6,293,941 B1 9/2001 Strul et al.
6,309,386 B1 10/2001 Bek
6,371,926 B1 4/2002 Thorson et al.
6,383,181 B1 5/2002 Johnston et al.
6,391,028 B1 5/2002 Fanton et al.
6,416,491 B1 7/2002 Edwards et al.
6,425,151 B2 7/2002 Barnett
6,431,174 B1 8/2002 Knudson et al.
6,451,013 B1 9/2002 Bays et al.
6,502,574 B2 1/2003 Stevens
6,551,310 B1 4/2003 Ganz et al.
6,562,036 B1 5/2003 Ellman et al.
6,575,969 B1 6/2003 Rittman et al.
6,589,235 B2 7/2003 Wong et al.
6,659,106 B1 12/2003 Hovda et al.
6,911,027 B1 6/2005 Edwards et al.
6,978,781 B1 12/2005 Jordan
7,055,523 B1 6/2006 Brown
7,097,641 B1 8/2006 Arless et al.
7,114,495 B2 10/2006 Lockwood, Jr.
7,322,993 B2 1/2008 Metzger et al.
7,361,168 B2 4/2008 Makower
7,416,550 B2 8/2008 Protsenko et al.
7,442,191 B2 10/2008 Hovda et al.
7,655,243 B2 2/2010 Deem et al.
7,678,069 B1 3/2010 Baker et al.
7,780,730 B2 8/2010 Saidi
7,824,394 B2 11/2010 Manstein
7,850,683 B2 12/2010 Elkins et al.
7,997,278 B2 8/2011 Utley
8,114,062 B2 2/2012 Muni
8,128,617 B2 3/2012 Bencini et al.
8,137,345 B2 3/2012 McNall, III et al.
8,317,781 B2 11/2012 Owens et al.
8,317,782 B1 11/2012 Ellman et al.
8,936,594 B2 1/2015 Wolf et al.
8,986,301 B2 3/2015 Wolf et al.
9,027,597 B2 5/2015 Kubo
9,072,597 B2 7/2015 Wolf et al.
9,125,677 B2 9/2015 Sobol
9,179,964 B2 11/2015 Wolf et al.
9,179,967 B2 11/2015 Wolf et al.
9,237,924 B2 1/2016 Wolf et al.
9,452,087 B2 1/2016 Holm et al.
9,247,989 B2 2/2016 Truckai
9,415,194 B2 8/2016 Wolf et al.
9,433,463 B2 9/2016 Wolf et al.
9,452,010 B2 9/2016 Wolf et al.
9,486,278 B2 11/2016 Wolf et al.
9,526,571 B2 12/2016 Wolf et al.
9,687,288 B2 6/2017 Saadat
9,687,296 B2 6/2017 Wolf et al.
9,763,723 B2 9/2017 Saadat
9,763,743 B2 9/2017 Lin
9,770,293 B2 9/2017 Dresher
9,788,886 B2 10/2017 Wolf et al.
9,801,752 B2 10/2017 Wolf et al.
9,888,957 B2 2/2018 Wolf et al.
9,913,682 B2 3/2018 Wolf et al.
9,943,361 B2 4/2018 Wolf et al.
10,028,780 B2 7/2018 Wolf et al.
10,028,781 B2 7/2018 Saadat
10,265,115 B2 4/2019 Wolf et al.
10,335,221 B2 7/2019 Wolf et al.
10,376,300 B2 8/2019 Wolf et al.
10,398,489 B2 9/2019 Wolf
10,456,185 B2 10/2019 Wolf et al.
10,456,186 B1 10/2019 Wolf et al.
10,470,814 B2 11/2019 Wolf et al.
10,485,603 B2 11/2019 Wolf et al.
10,603,059 B2 3/2020 Dinger et al.
D880,694 S 4/2020 Ng et al.
D881,904 S 4/2020 Angeles et al.
10,631,925 B2 4/2020 Wolf et al.
10,722,282 B2 7/2020 Wolf
2002/0010460 A1 1/2002 Joye et al.
2002/0016588 A1 2/2002 Wong et al.
2002/0049464 A1 4/2002 Donofrio et al.
2002/0087155 A1 7/2002 Underwood et al.
2002/0128641 A1 9/2002 Underwood et al.
2003/0144659 A1 7/2003 Edwards
2003/0208194 A1 11/2003 Hovda et al.
2003/0225403 A1 12/2003 Woloszko et al.
2004/0193238 A1 9/2004 Mosher
2004/0210214 A1 10/2004 Knowlton
2004/0215235 A1 10/2004 Jackson et al.
2004/0220644 A1 11/2004 Shalev et al.
2005/0020901 A1 1/2005 Belson
2005/0119643 A1 6/2005 Sobol et al.
2005/0222565 A1 10/2005 Manstein
2005/0234439 A1 10/2005 Underwood
2005/0234443 A1 10/2005 Rioux et al.
2005/0240147 A1 10/2005 Makower et al.
2005/0288665 A1 12/2005 Woloszko et al.
2006/0190022 A1 8/2006 Beyar et al.
2006/0195169 A1 8/2006 Gross et al.
2006/0235377 A1 10/2006 Earley
2006/0253117 A1* 11/2006 Hovda A61B 18/1402 606/48
2006/0276817 A1 12/2006 Vassallo et al.
2007/0043350 A1 2/2007 Soltesz et al.
2007/0049999 A1 3/2007 Esch
2007/0066944 A1 3/2007 Nyte
2007/0073282 A1 3/2007 McGarrigan et al.
2007/0093710 A1 4/2007 Maschke
2007/0219600 A1 9/2007 Gertner et al.
2007/0244529 A1 10/2007 Choi et al.
2008/0004613 A1 1/2008 Barbut et al.
2008/0027423 A1 1/2008 Choi et al.
2008/0027480 A1 1/2008 van der Burg et al.
2008/0082090 A1 4/2008 Manstein
2008/0125626 A1 5/2008 Chang et al.
2008/0154237 A1 6/2008 Chang
2008/0183251 A1 7/2008 Azar
2008/0255642 A1 10/2008 Zarins et al.
2008/0312644 A1 12/2008 Fourkas et al.
2009/0018485 A1 1/2009 Krespi et al.
2009/0124958 A1 5/2009 Li
2009/0143821 A1 6/2009 Stupak
2009/0192505 A1 7/2009 Askew
2009/0292358 A1 11/2009 Saidi
2009/0299355 A1 12/2009 Bencini et al.
2010/0144996 A1 6/2010 Kennedy et al.
2010/0152730 A1 6/2010 Makower et al.
2010/0160906 A1 6/2010 Jarrard
2010/0174283 A1 7/2010 McNall
2010/0204560 A1 8/2010 Salahieh
2010/0241112 A1 9/2010 Watson
2010/0260703 A1 10/2010 Vankelson
2011/0009737 A1 1/2011 Manstein
2011/0118726 A1 5/2011 De La Rama
2011/0282268 A1 11/2011 Baker et al.
2011/0288477 A1 11/2011 Ressemann et al.
2011/0301587 A1 12/2011 Deem et al.
2012/0029512 A1 2/2012 Willard et al.
2012/0039954 A1 2/2012 Cupit et al.
2012/0078377 A1 3/2012 Gonzales et al.
2012/0179154 A1 7/2012 Goldberg et al.
2012/0298105 A1 11/2012 Osorio
2012/0310233 A1 12/2012 Dimmer et al.
2012/0316473 A1 12/2012 Bonutti et al.
2012/0316557 A1 12/2012 Sartor et al.
2012/0323227 A1 12/2012 Wolf et al.
2012/0323232 A1 12/2012 Wolf et al.
2013/0116679 A1 5/2013 Van der Weide et al.
2013/0158536 A1 6/2013 Bloom
2013/0218158 A1 8/2013 Danek et al.
2014/0088463 A1 3/2014 Wolf et al.
2014/0114233 A1 4/2014 Deem et al.
2015/0164571 A1 6/2015 Saadat

(56) **References Cited**

U.S. PATENT DOCUMENTS

2015/0202003	A1	7/2015	Wolf et al.
2016/0045277	A1	2/2016	Lin
2016/0121112	A1	5/2016	Azar
2017/0231651	A1	8/2017	Dinger et al.
2017/0252089	A1	9/2017	Hester
2017/0252100	A1	9/2017	Wolf et al.
2018/0177542	A1	6/2018	Wolf et al.
2018/0177546	A1	6/2018	Dinger et al.
2018/0185085	A1	7/2018	Wolf et al.
2018/0228533	A1	8/2018	Wolf et al.
2018/0263678	A1	9/2018	Saadat
2018/0317997	A1	11/2018	Dinger et al.
2018/0333195	A1	11/2018	Greep et al.
2018/0344378	A1	12/2018	Wolf et al.
2019/0076185	A1	3/2019	Dinger et al.
2019/0151005	A1	5/2019	Wolf et al.
2019/0175242	A1	6/2019	Wolf et al.
2019/0201069	A1	7/2019	Wolf et al.
2019/0231409	A1	8/2019	Wolf et al.
2019/0282289	A1	9/2019	Wolf et al.
2019/0343577	A1	11/2019	Wolf et al.
2020/0100829	A1	4/2020	Wolf et al.
2020/0129223	A1	4/2020	Angeles et al.
2020/0170699	A1	6/2020	Wolf et al.
2020/0205884	A1	7/2020	Wolf et al.

FOREIGN PATENT DOCUMENTS

WO	2001043653	6/2001
WO	2003024349	3/2003
WO	2007037895	4/2007
WO	2007134005	11/2007
WO	2010077980	7/2010
WO	2012174161	12/2012
WO	2013028998 A2	2/2013
WO	WO2014022436	2/2014
WO	2015047863	4/2015
WO	2015048806	4/2015
WO	2015153696	10/2015

OTHER PUBLICATIONS

"Buckley et al., "Mapping the depth dependence of shear properties in articular cartilage," J Biomech., 41(11):2430-2437, Epub Jul. 10, 2008".

"Chen et al., China Journal of Endoscopy, vol. 11, No. 3. pp. 239-243, Mar. 2005, [English Translation of Title] "Radiofrequency treatment of nasal posterior—under nerve ethmoidal nerve and infraturbinal for perennial allergic rhinitis under nasal endoscope," [also translated as] "Preliminary exploration of radiofrequency thermocoagulation of the posterior inferior nasal nerve, anterior ethmoidal nerve, and inferior nasal concha under nasal endoscopy in the treatment of perennial allergic rhinitis." 9 pages."

"Cole, "Biophysics of nasal airflow: a review," Am J Rhinol., 14(4):245-249, Jul.-Aug. 2000".

"Cole, "The four components of the nasal valve," Am J Rhinol., 17(2):107-110, Mar.-Apr. 2003".

"Fang et al., J First Mil Med Univ, vol. 25 No. 7, pp. 876-877, 2005, [English translation of title] "Nasal endoscopy combined with multiple radiofrequency for perennial allergic rhinitis" [also translated as] "Nasal Endoscopic Surgery Combined with Multisite Radiofrequency Technology for Treating Perennial Allergic Rhinitis," 4 pages."

"Griffin et al., "Effects of enzymatic treatments on the depth-dependent viscoelastic shear properties of articular cartilage," J Orthop Res., 32(12): 1652-1657, Epub Sep. 5, 2014".

"Kjaergaard et al., "Relation of nasal airflow to nasal cavity dimensions," Arch Otolaryngol Head Neck Surg., 135(6):565-570, Jun. 2009".

"Kong et al., Journal of Clinical Otorhinolaryngology, 2005. "Clinical observation on radiofrequency ablation treatment in perennial allergic rhinitis," Retrieved from the Internet: <URL:http://en.cnki.com.cn/Article_en/CJFDTOTAL-LCEH200505015.htm>, 1 page.".

"Silverberg et al., "Structure-function relations and rigidity percolation in the shear properties of articular cartilage," Biophys J., 107(7):1721-1730, Oct. 7, 2014".

"Stewart et al., "Development and validation of the Nasal Obstruction Symptom Evaluation (NOSE) scale," Otolaryngol Head Neck Surg., 130(2):157-163, Feb. 2004".

"Stupak, "A Perspective on the Nasal Valve," Dept. of Otorhinolaryngology, Albert Einstein College of Medicine, Nov. 6, 2009".

"Stupak, "Endonasal repositioning of the upper lateral cartilage and the internal nasal valve," Ann Otol Rhinol Laryngol., 120(2):88-94, Feb. 2011".

"International Search Report and Written Opinion for PCT/US2012/042316, dated Aug. 24, 2012, 15 pages".

"International Search Report and Written Opinion for PCT/US2014/054726, dated Dec. 23, 2014, 5 pages".

"Liu et al., China Journal of Endoscopy, vol. 14, No. 11, pp. 1127-1130, Nov. 2008, [English Translation of Title] "Impact of treatment of perennial rhinitis by radiofrequency thermocoagulations to vidian and antirior ethomoidal nerves on mucociliary clearance," [also translated as] "Impact of radiofrequency thermocoagulation of bilateral vidian and anterior ethmoidal nerve cluster regions on nasal mucociliary transport function in perennial allergic rhinitis and vasomotor rhinitis" 12 pages."

"Search Report in European Application No. 18204723.3 dated Feb. 18, 2019, 8 pages."

"International Search Report and Written Opinion for PCT/US2015/023742, dated Jun. 29, 2015, 5 pages".

"Singapore Search Report for Application Serial No. 201309238-2, dated Apr. 17, 2014, 27 pages".

"Supplementary European Search Report for Application No. 15772528, dated Sep. 26, 2017, 7 pages".

Extended European Search Report for Application No. 19199126.4, dated Dec. 9, 2019, 6 pages.

Extended European Search Report for Application No. 21172995.9 dated Jul. 9, 2021.

* cited by examiner

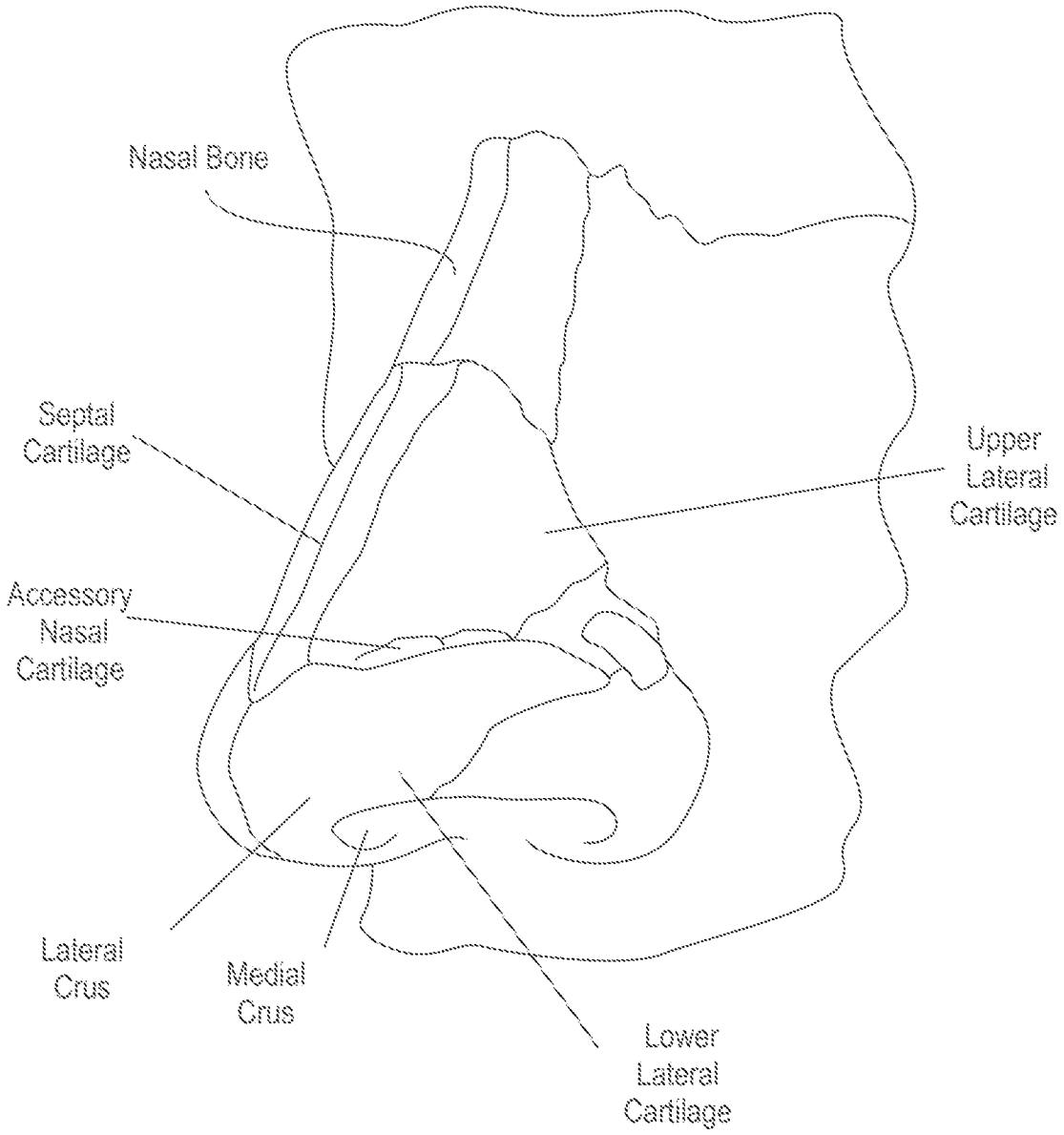
Nasal Bone
Septal Cartilage
Upper Lateral Cartilage
Accessory Nasal Cartilage
Lateral Crus
Medial Crus
Lower Lateral Cartilage

FIG. 1

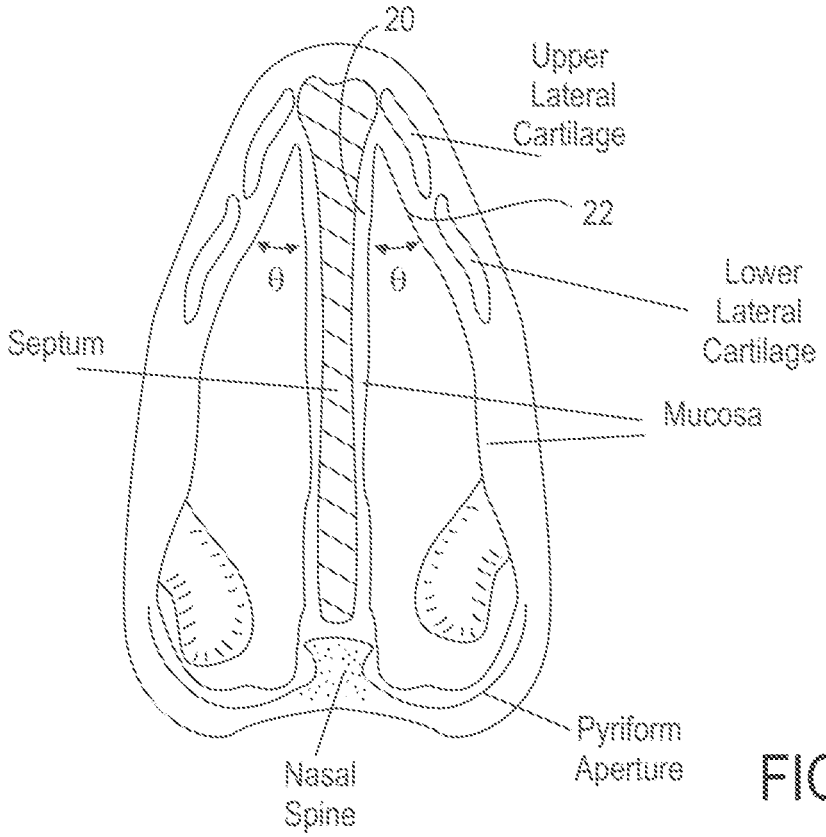
20
Upper
Lateral
Cartilage
22
θ
θ
Lower
Lateral
Cartilage
Septum
Mucosa
Pyriform
Aperture
Nasal
Spine

FIG. 2A

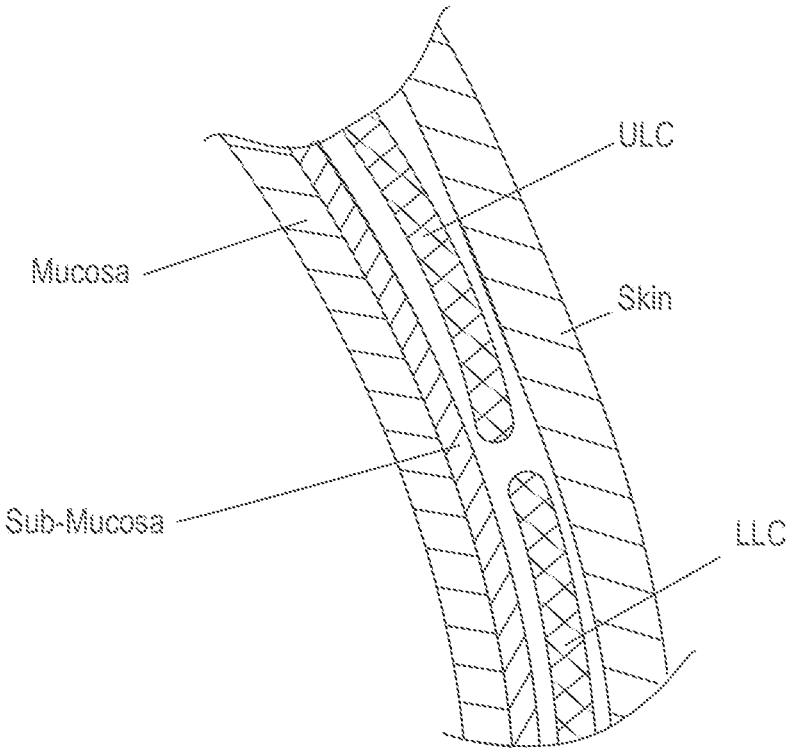
ULC
Mucosa
Skin
Sub-Mucosa
LLC

FIG. 2B

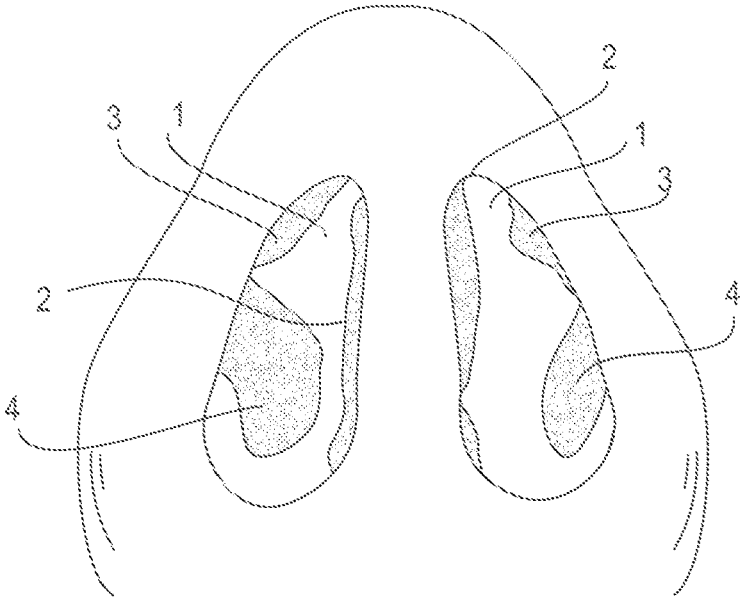

FIG. 2C

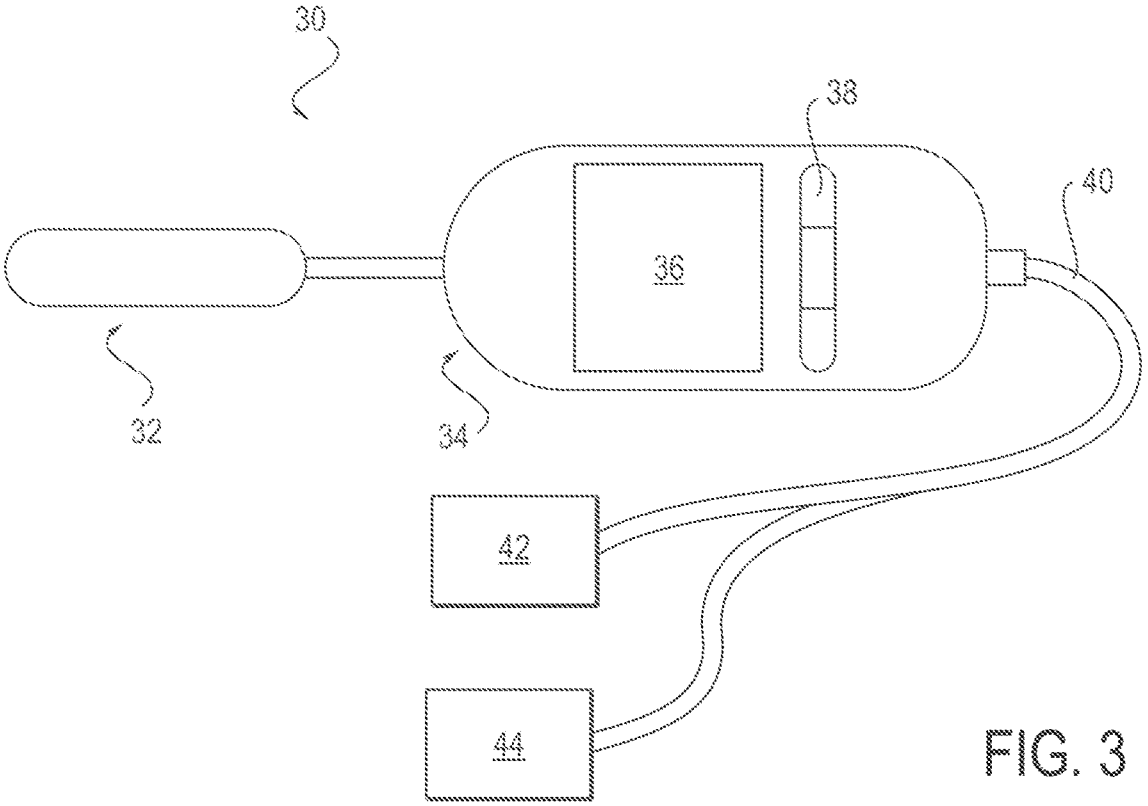

FIG. 3

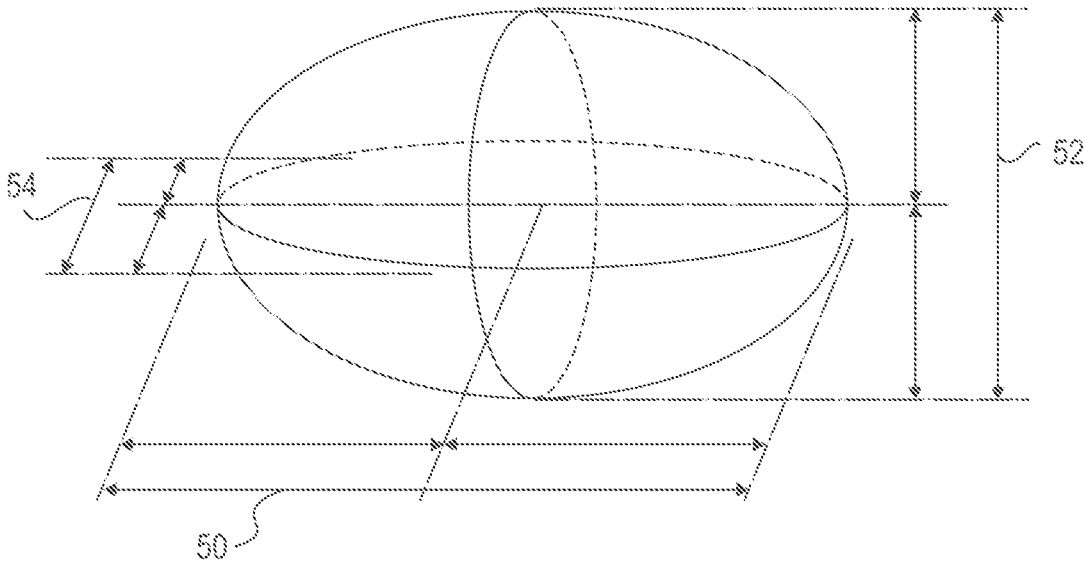

FIG. 4A

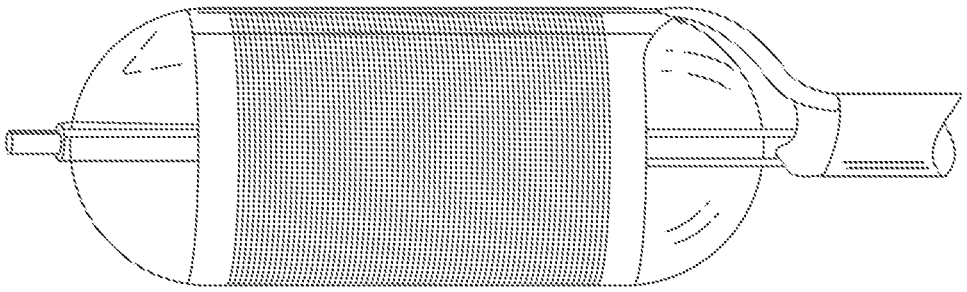

FIG. 4B

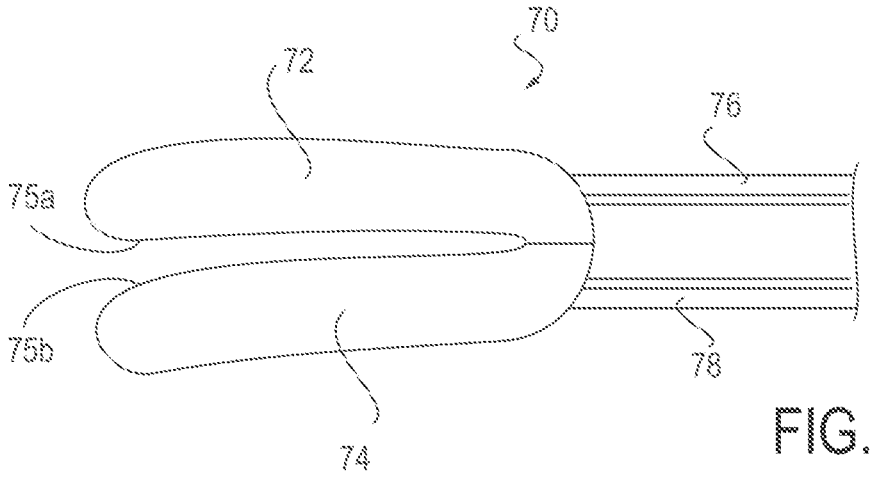

FIG. 4C

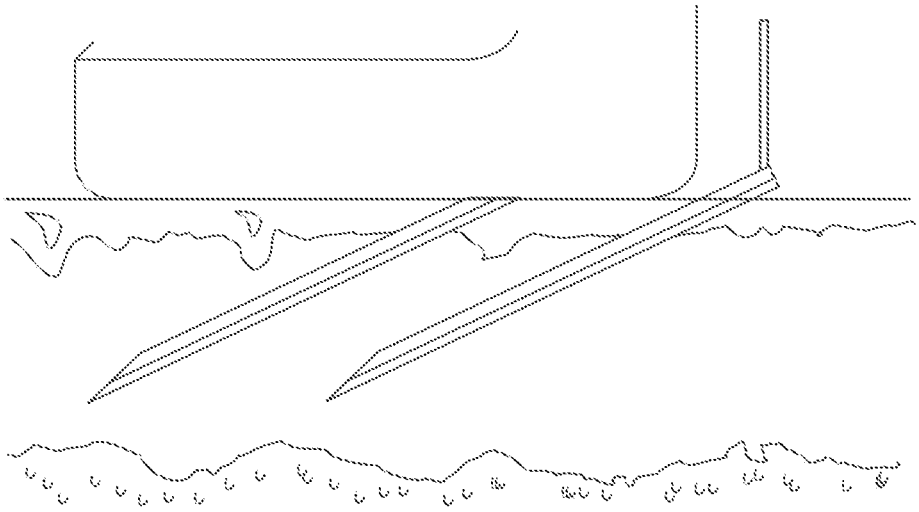

FIG. 4D

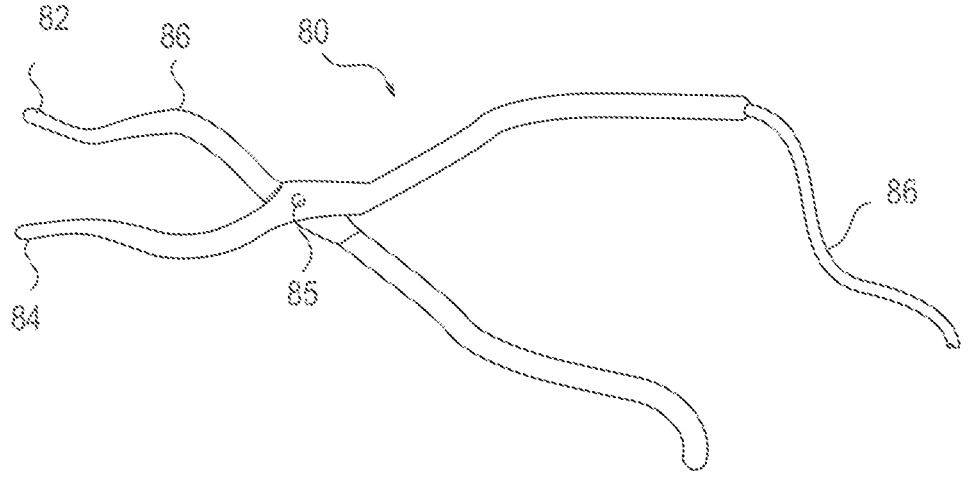

FIG. 5A

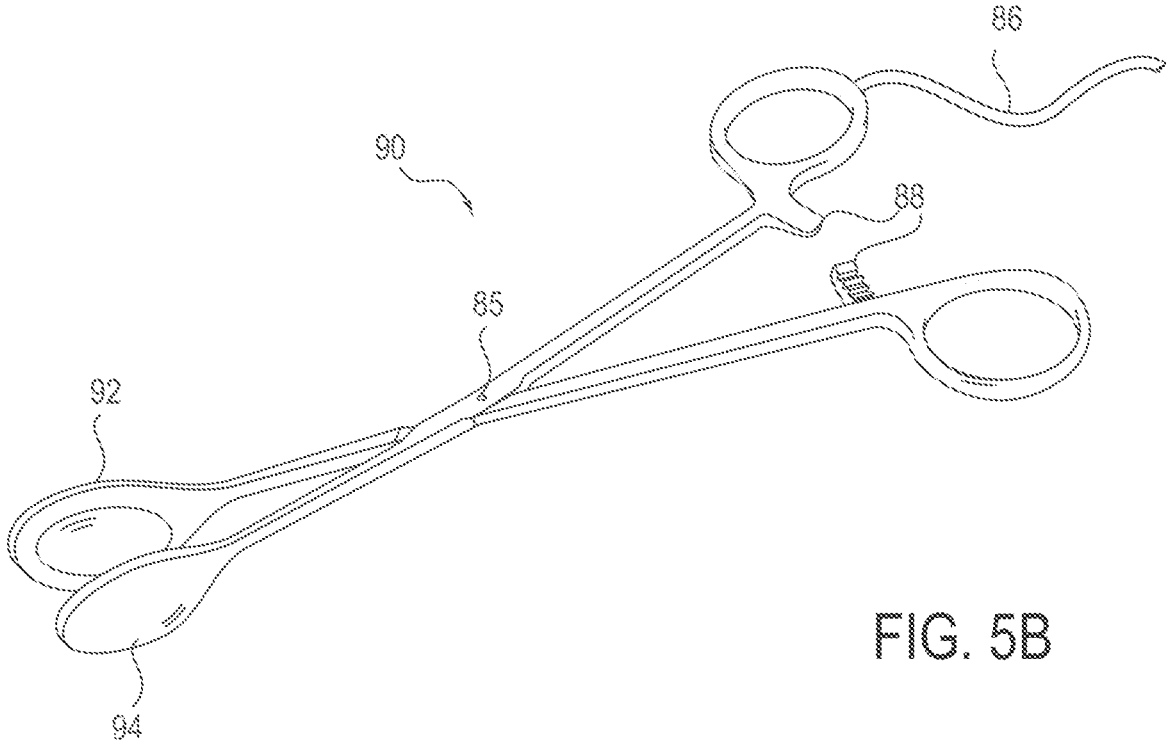

FIG. 5B

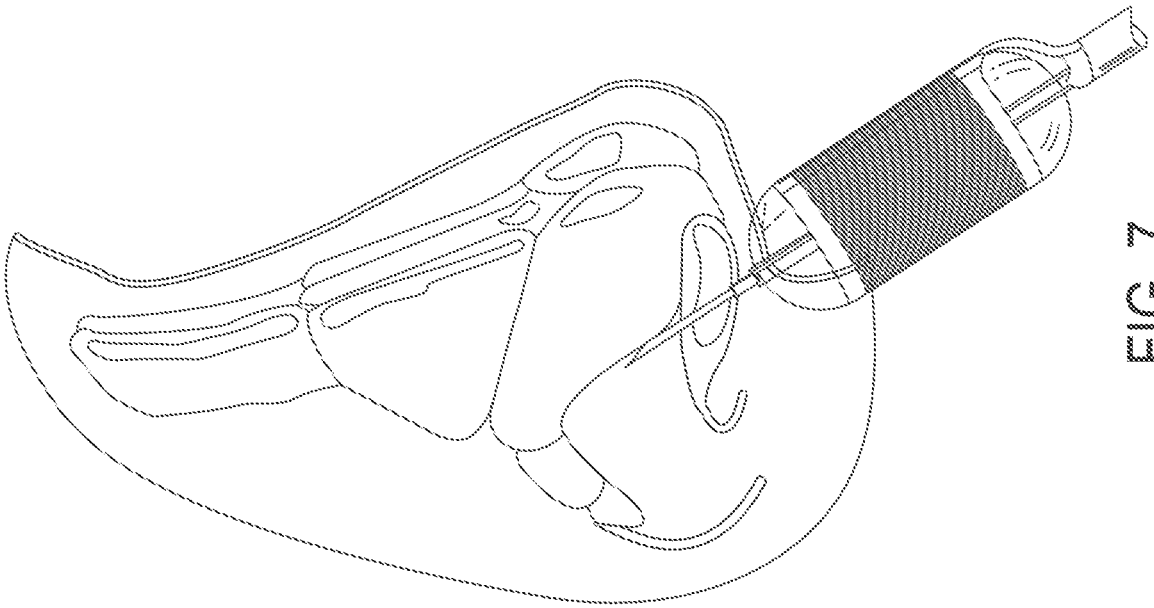

FIG. 7

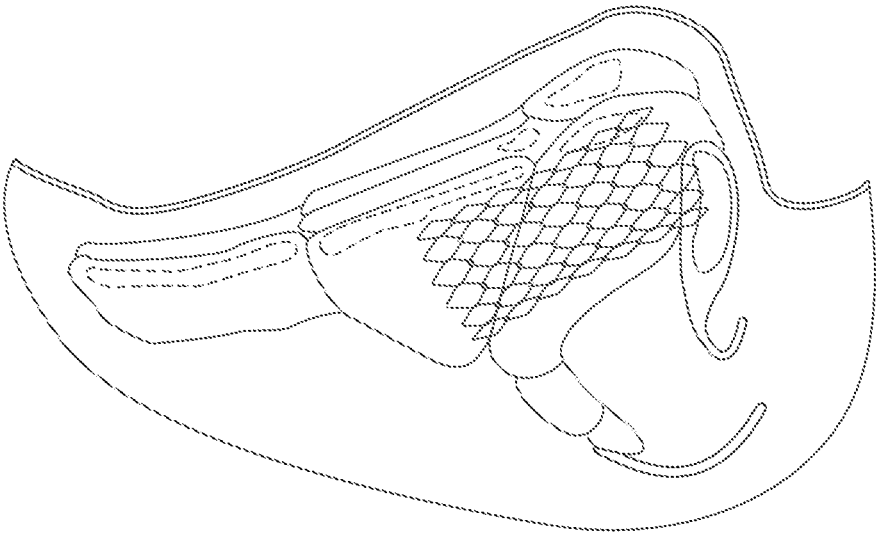

FIG. 6

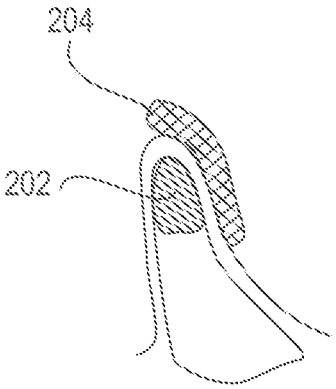

FIG. 8A

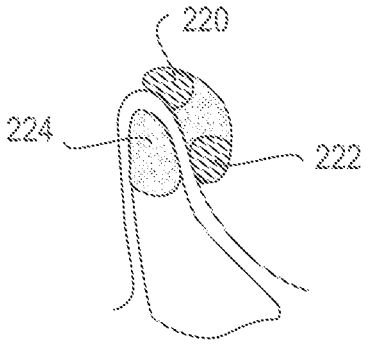

FIG. 8B

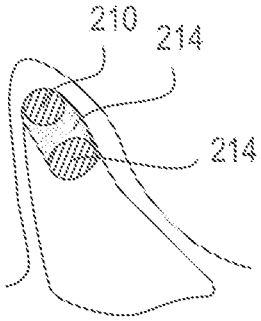

FIG. 8C

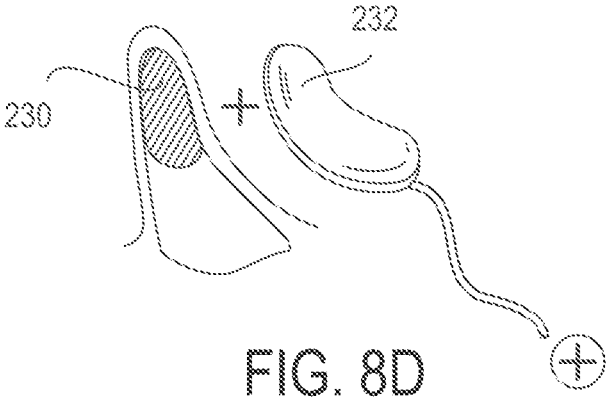

FIG. 8D

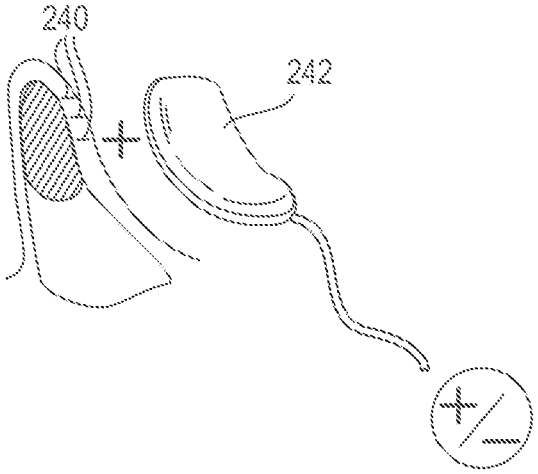

FIG. 8E

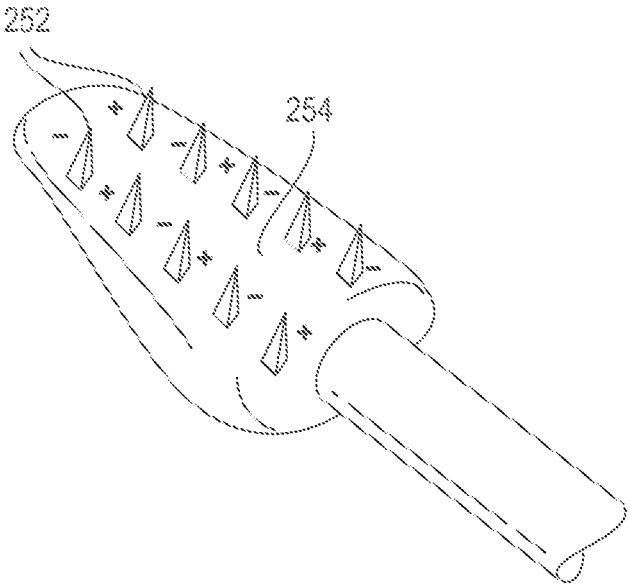

FIG. 8F

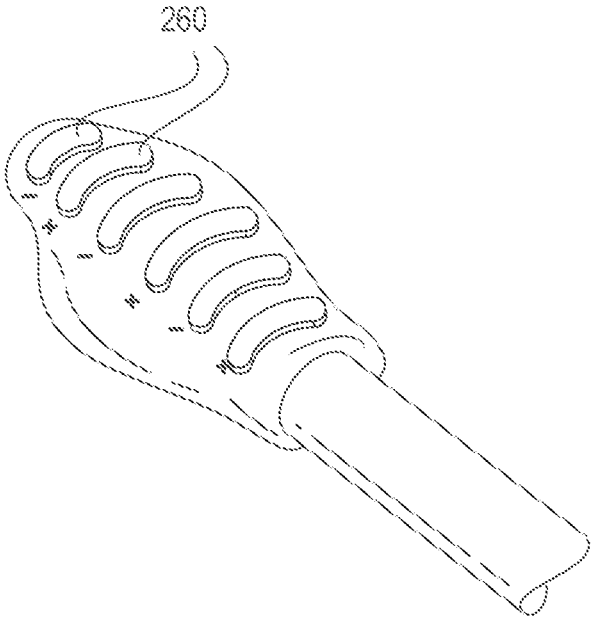

FIG. 8G

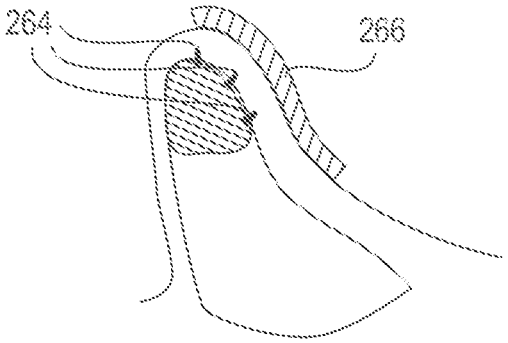

FIG. 8H

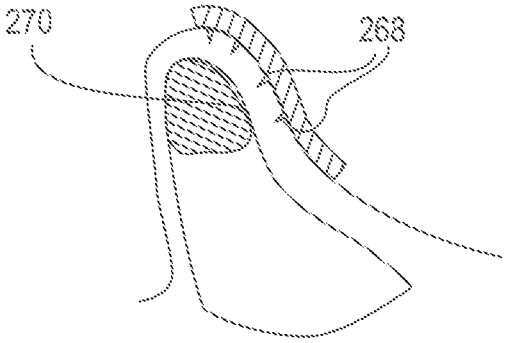

FIG. 8I

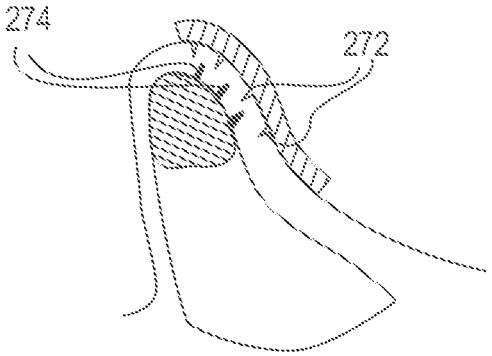

FIG. 8J

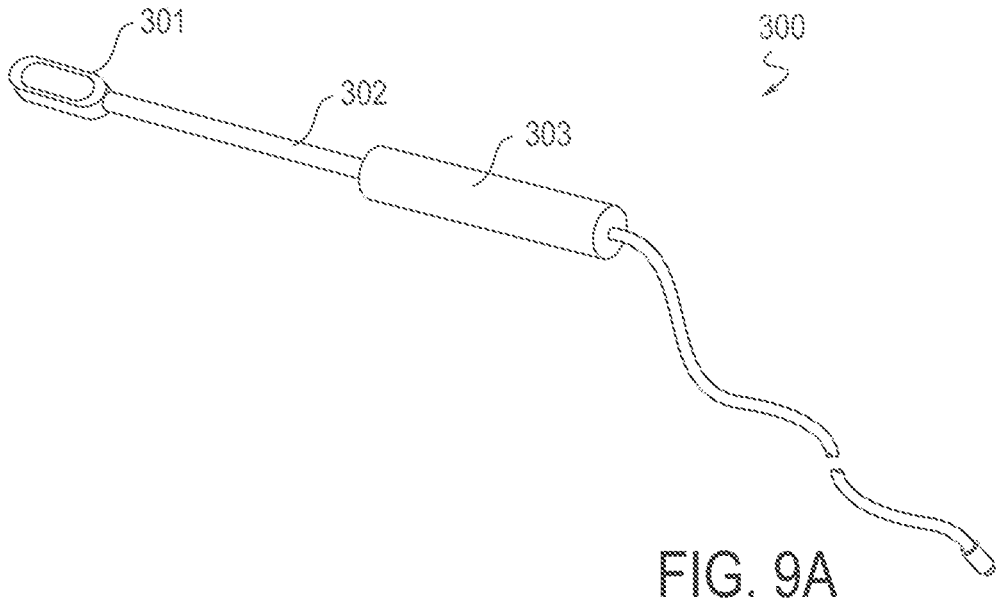

FIG. 9A

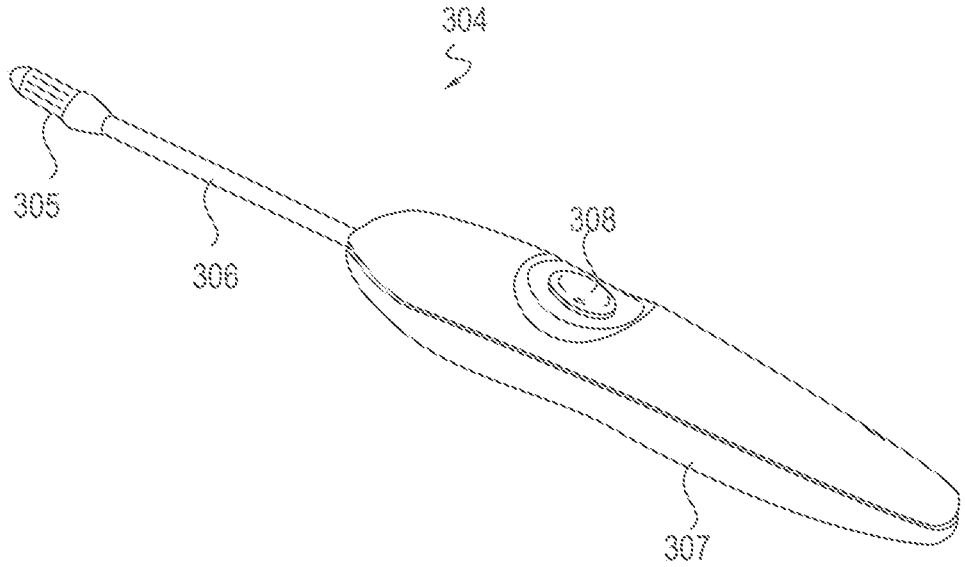

FIG. 9B

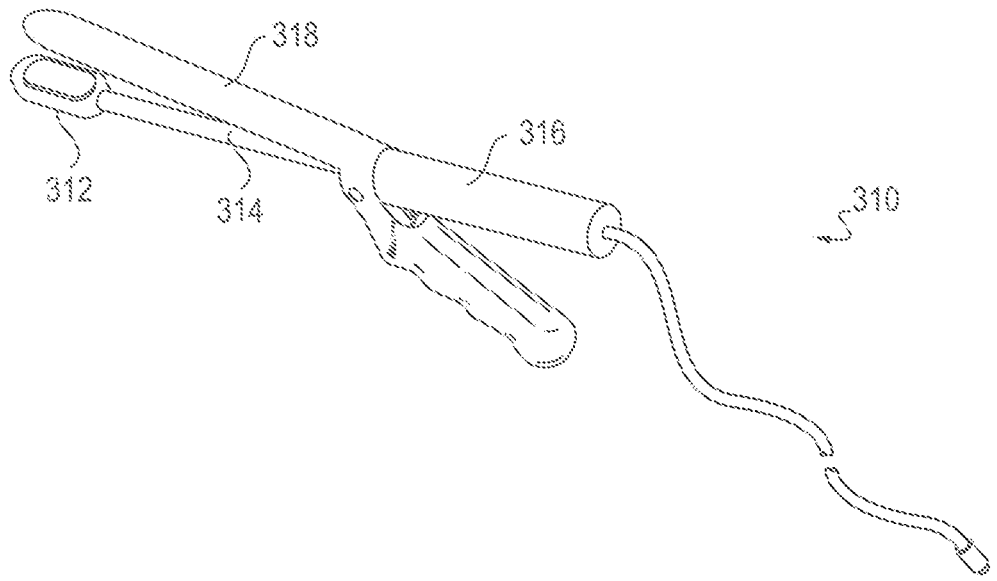

FIG. 10A

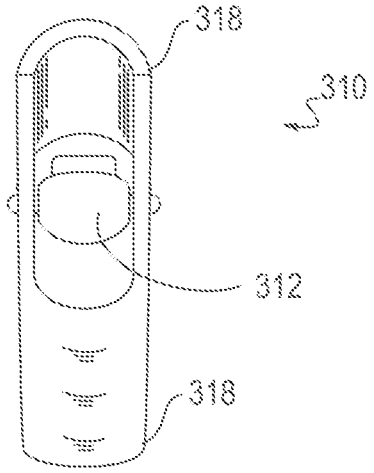

FIG. 10B

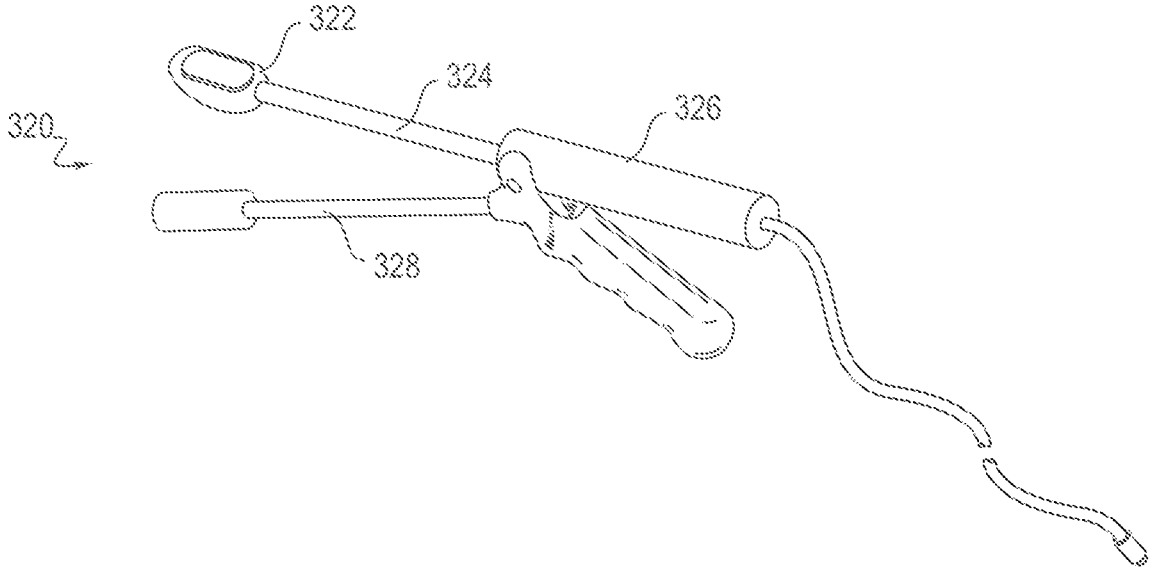

FIG. 11A

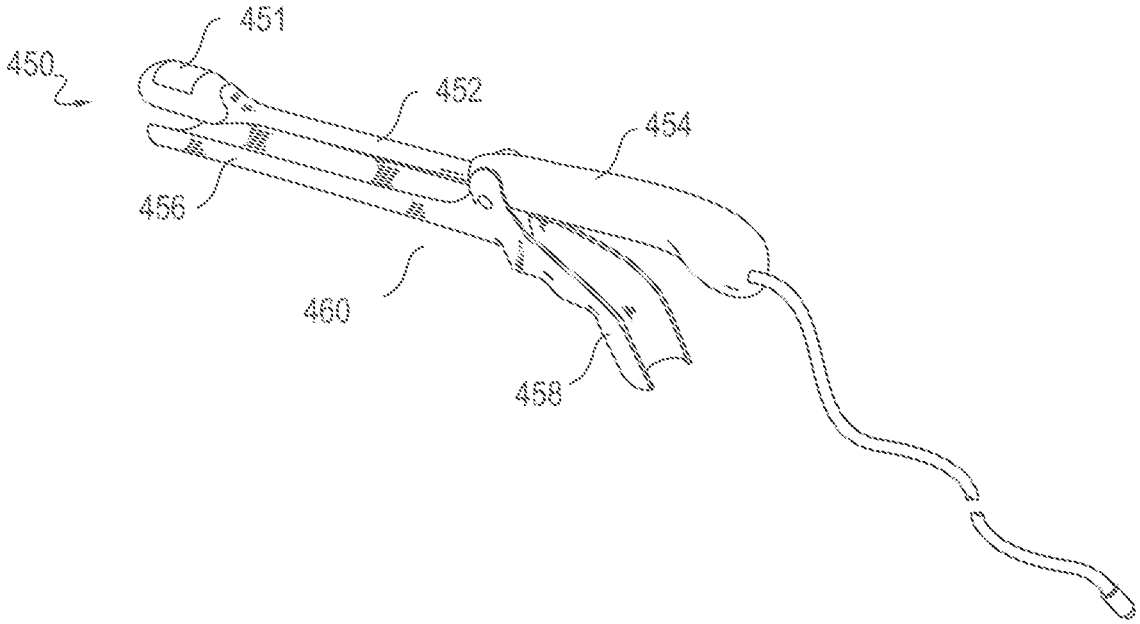

FIG. 11B

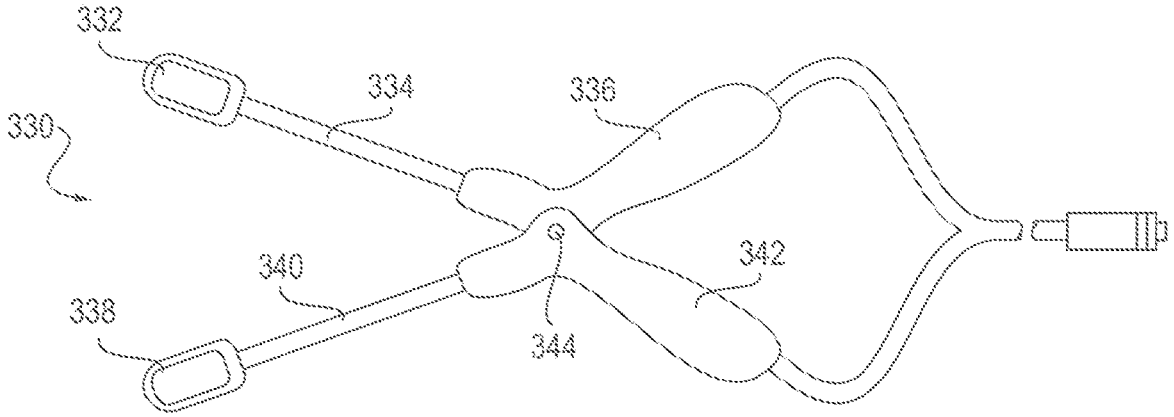

FIG. 12A

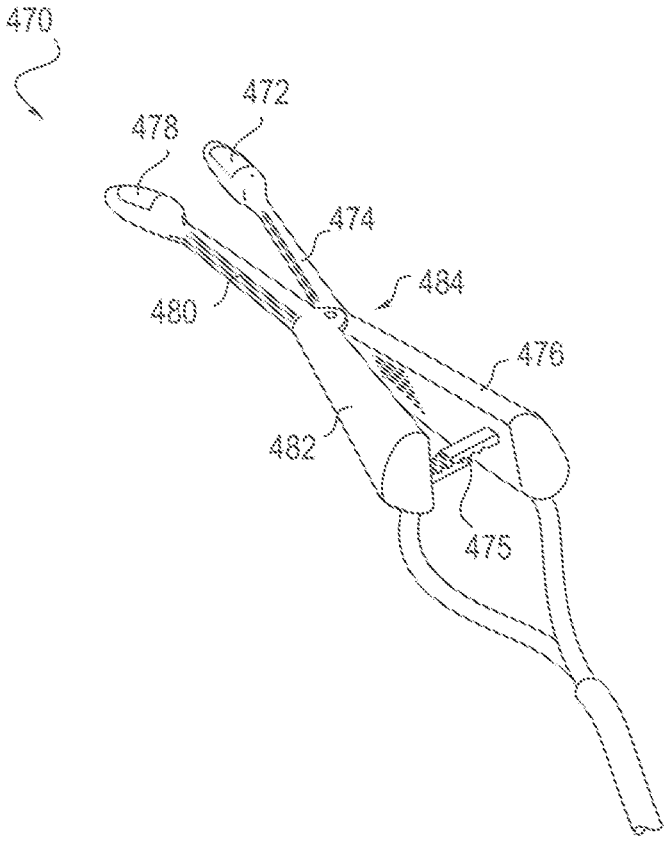

FIG. 12B

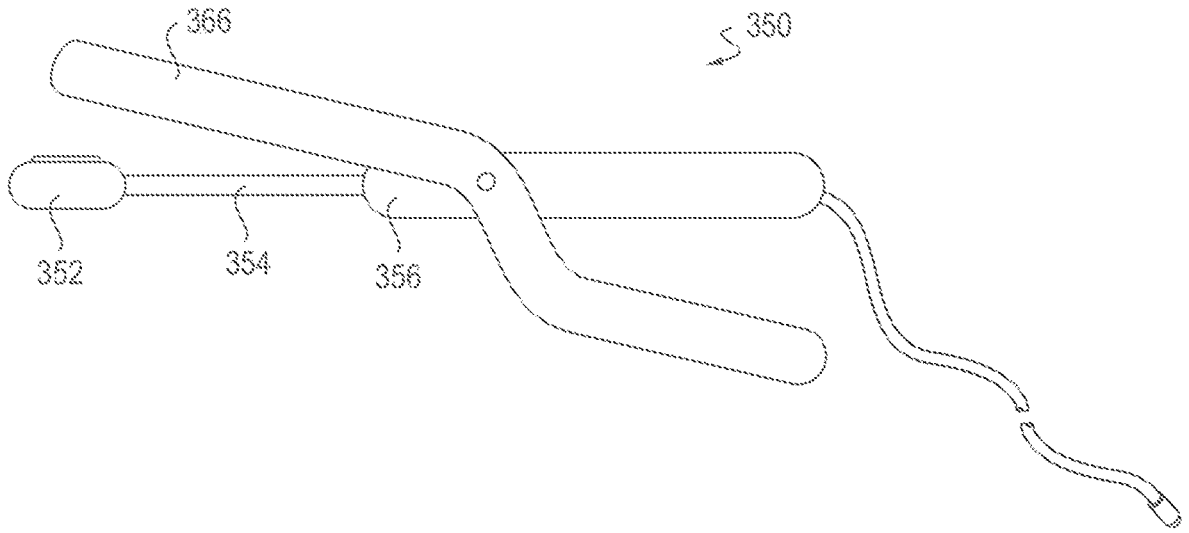

FIG. 13A

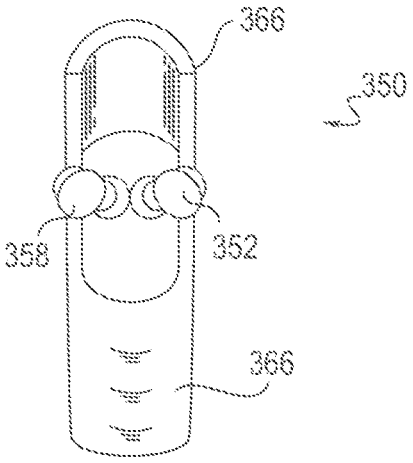

FIG. 13B

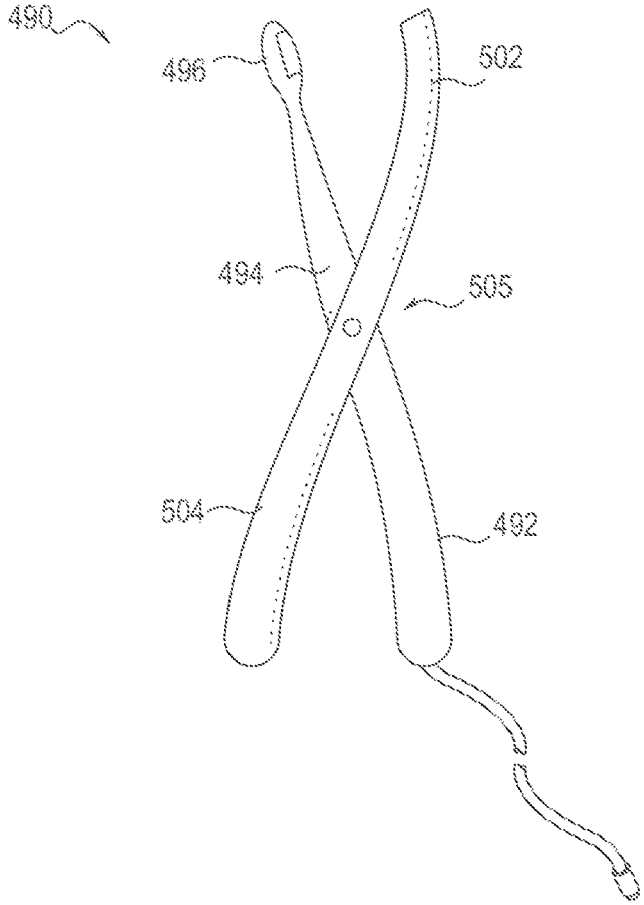

FIG. 13C

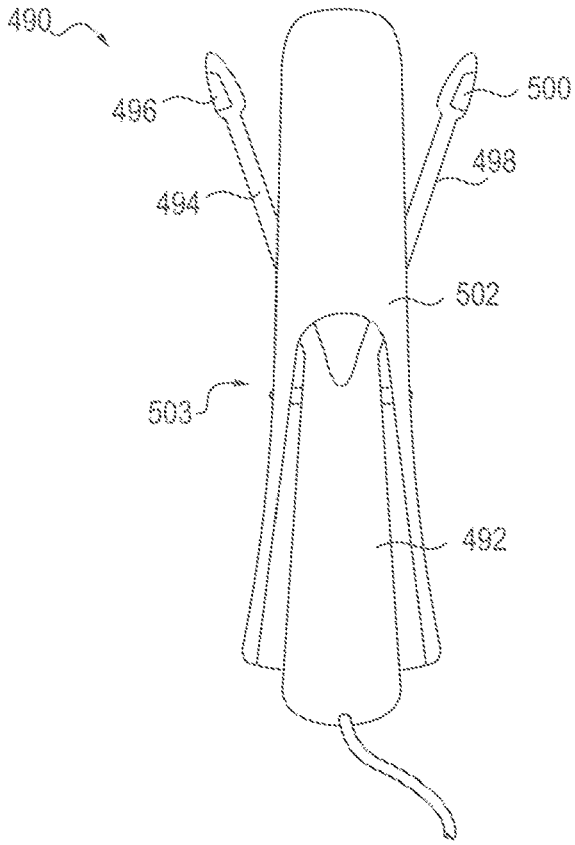

FIG. 13D

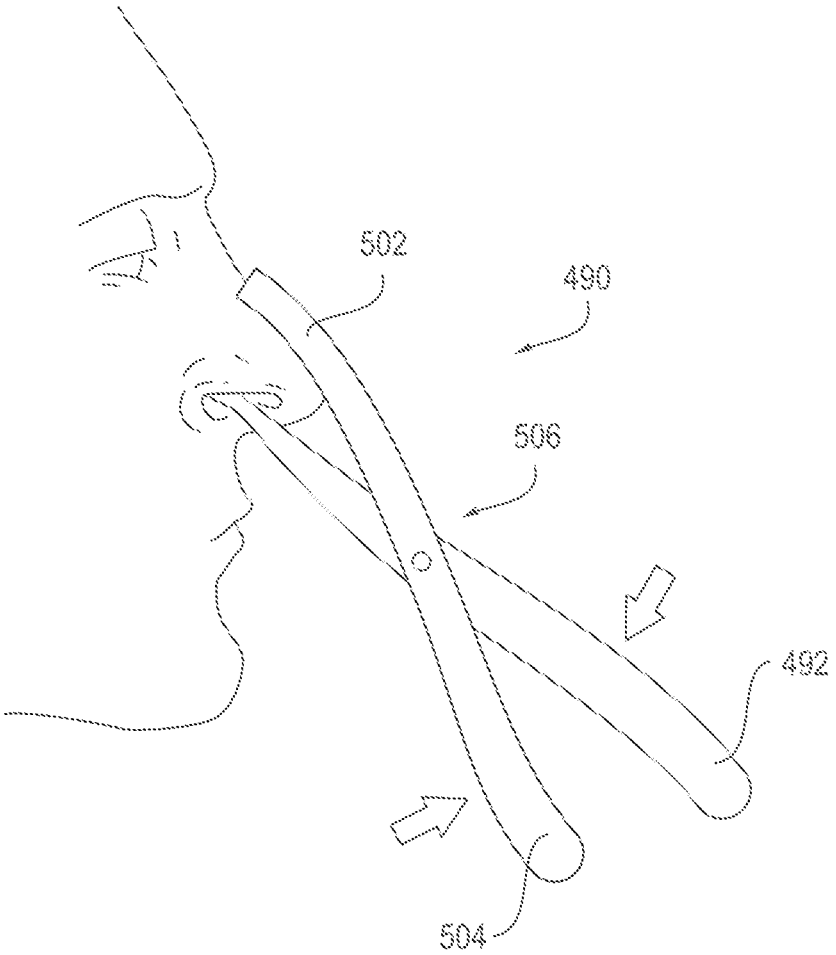

FIG. 13E

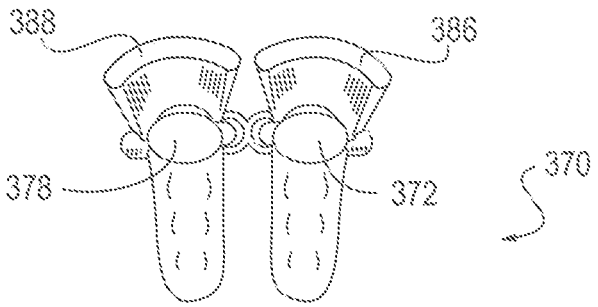

FIG. 14B

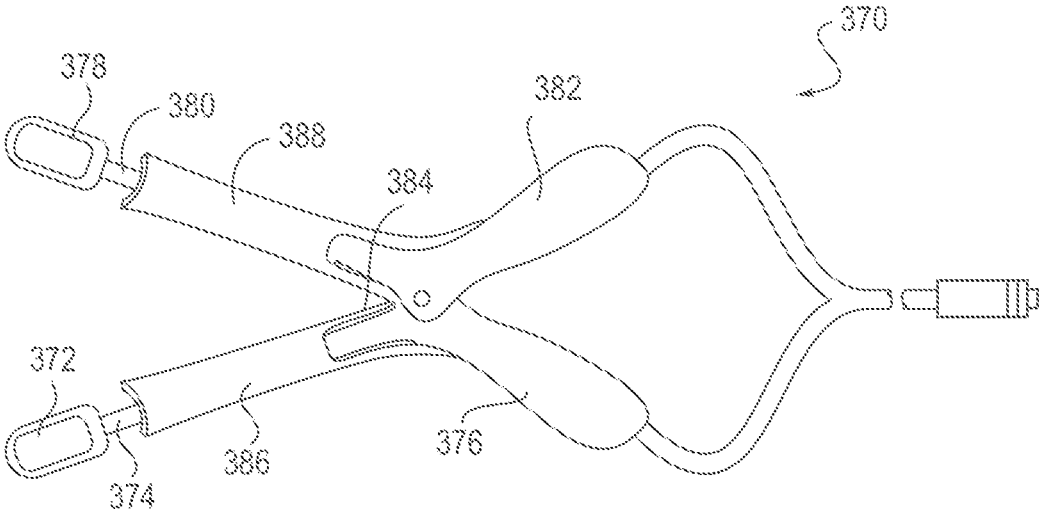

FIG. 14A

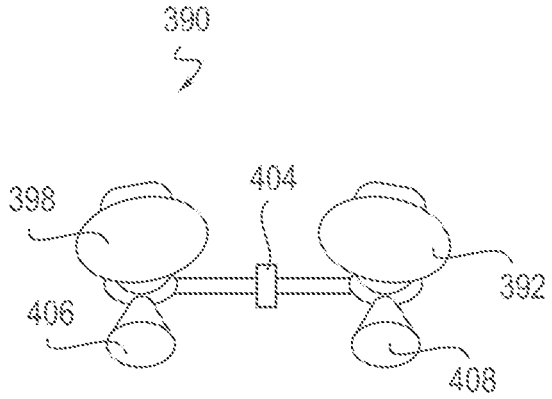

FIG. 15A

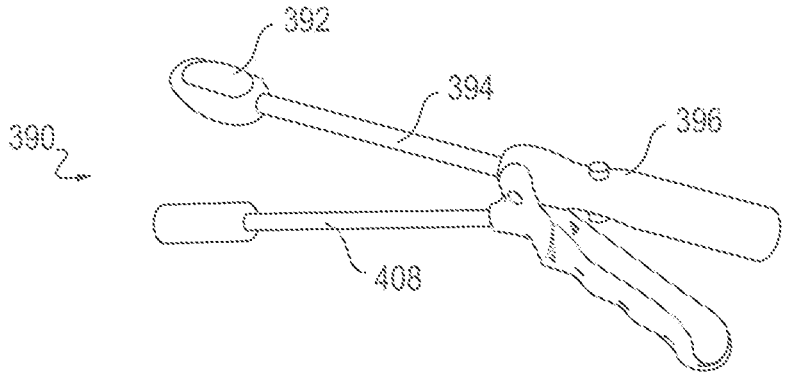

FIG. 15B

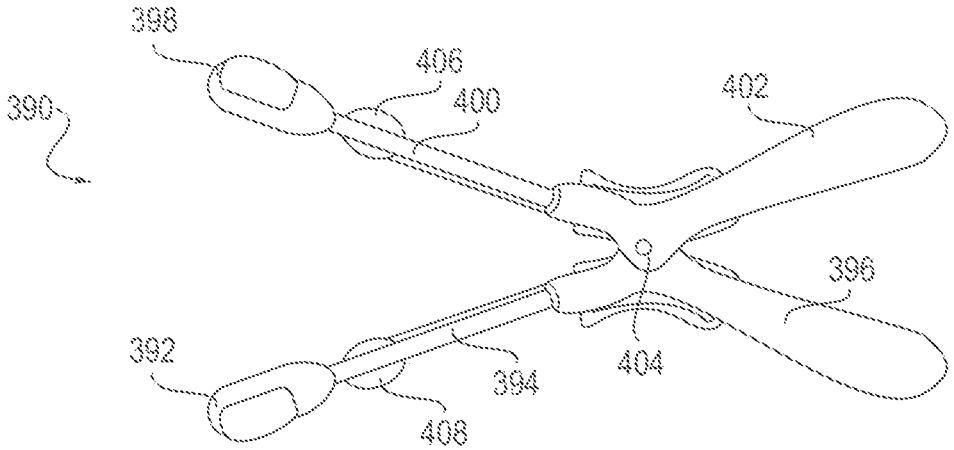

FIG. 15C

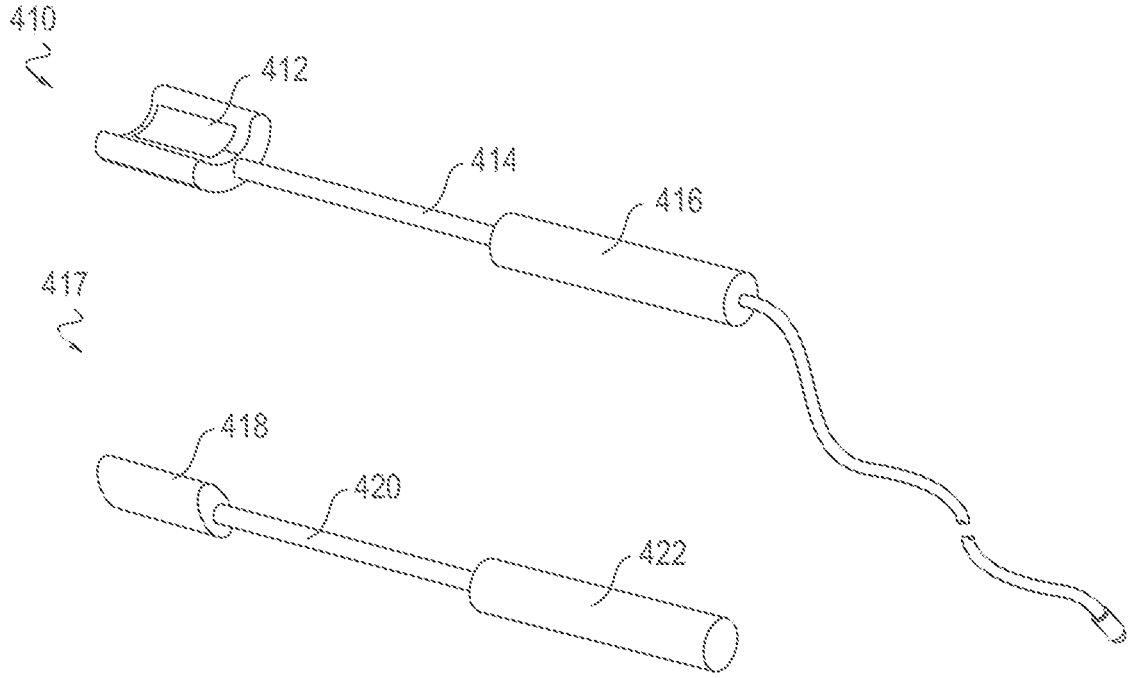

FIG. 16

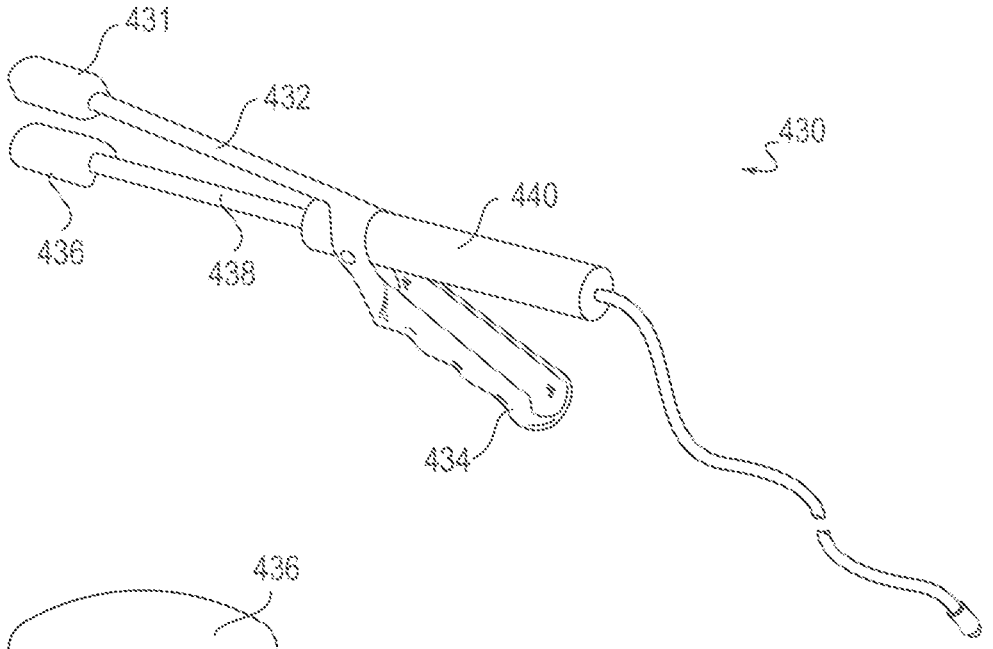

FIG. 17A

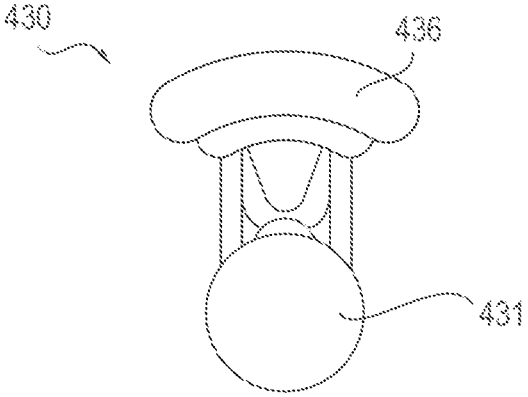

FIG. 17B

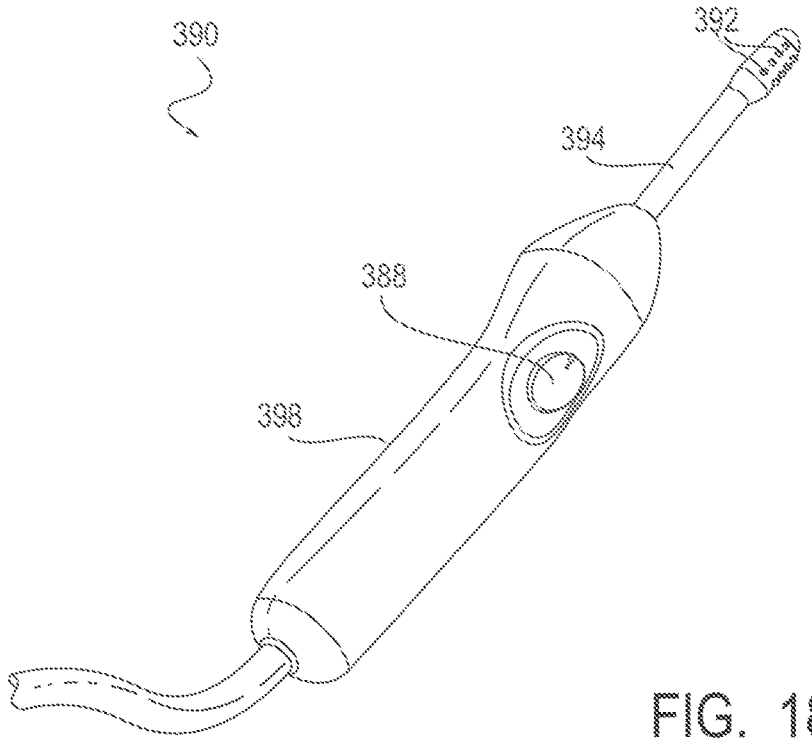

FIG. 18

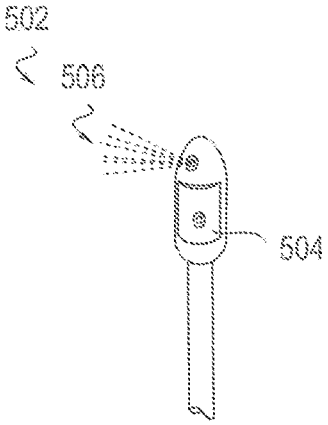

FIG. 19A

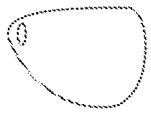

FIG. 19B

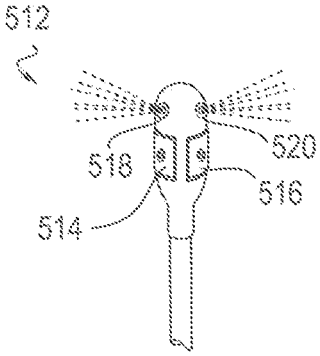

FIG. 20A

FIG. 20B

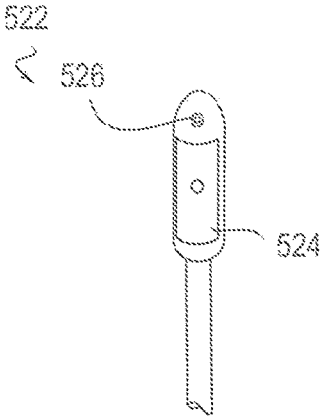

FIG. 21A

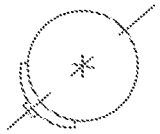

FIG. 21B

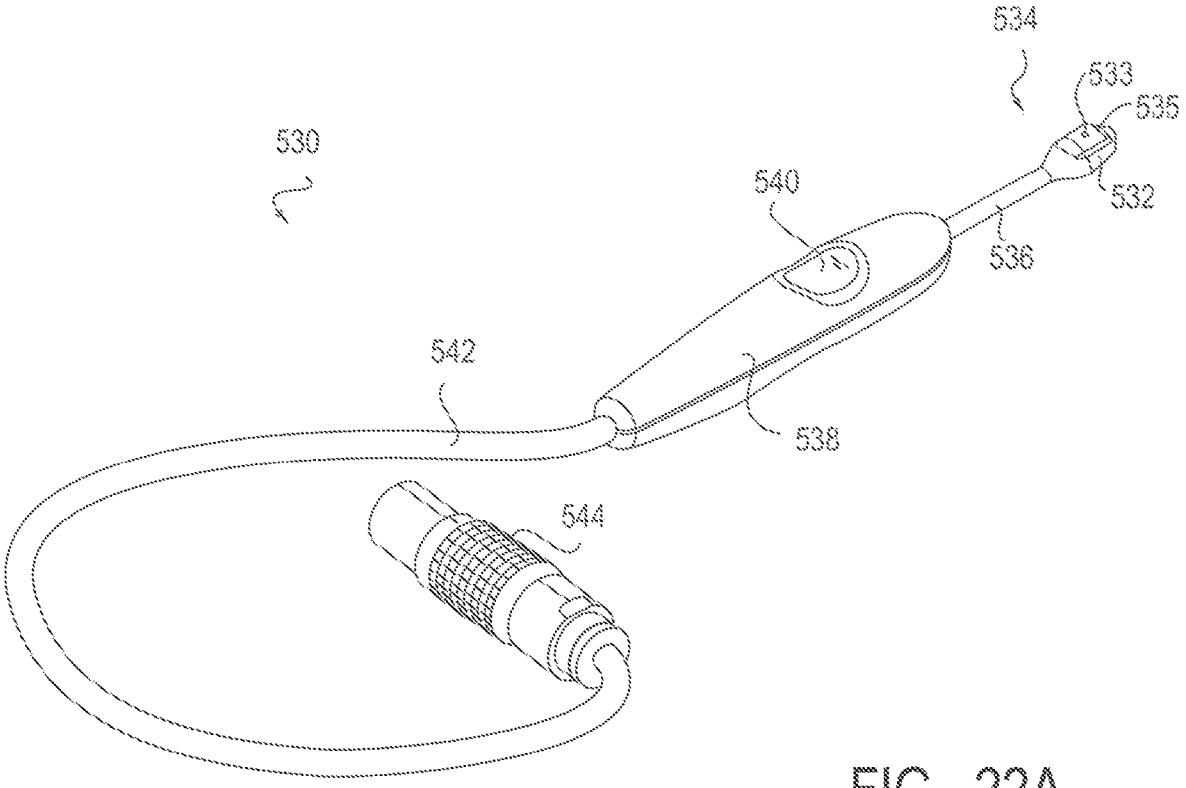

FIG. 22A

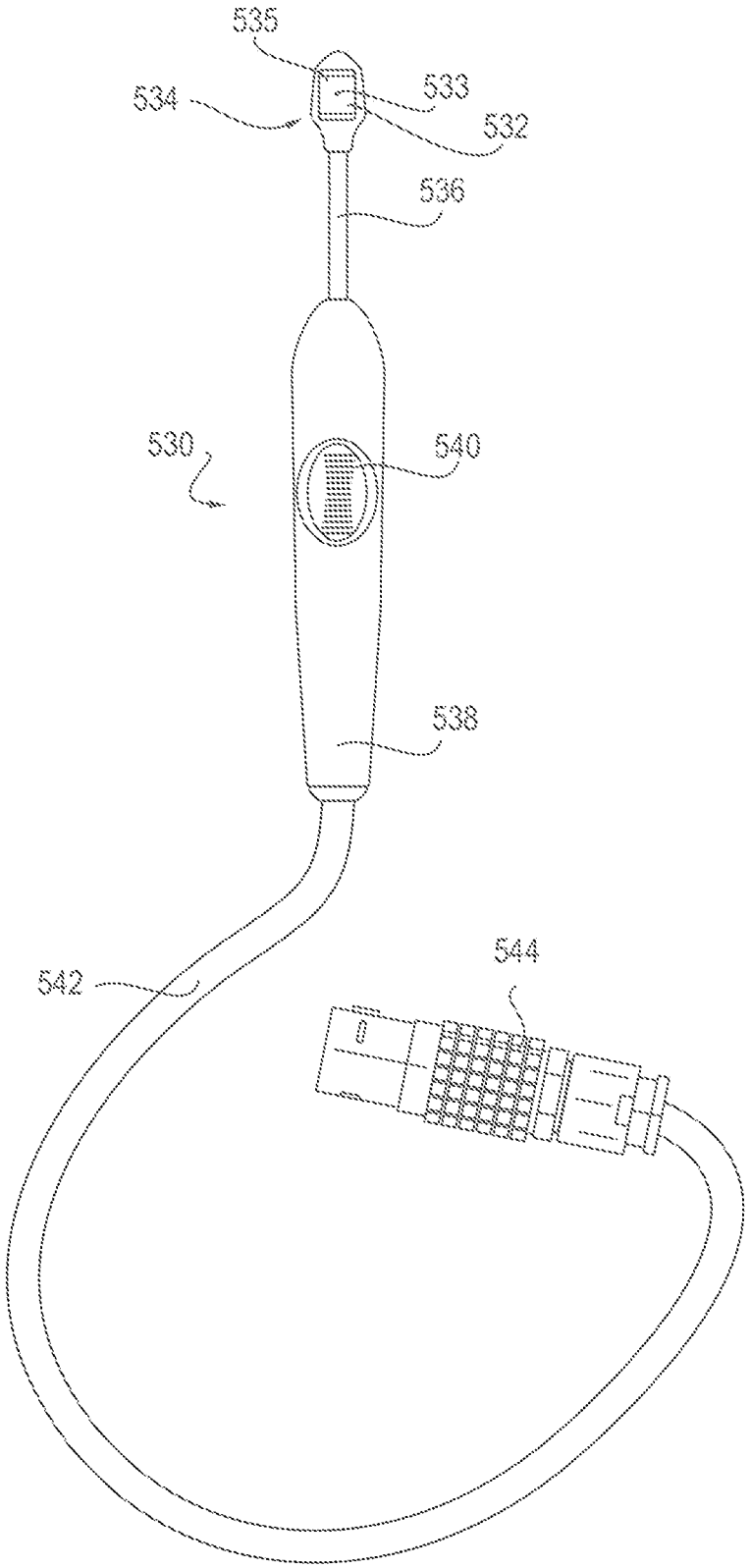

FIG. 22B

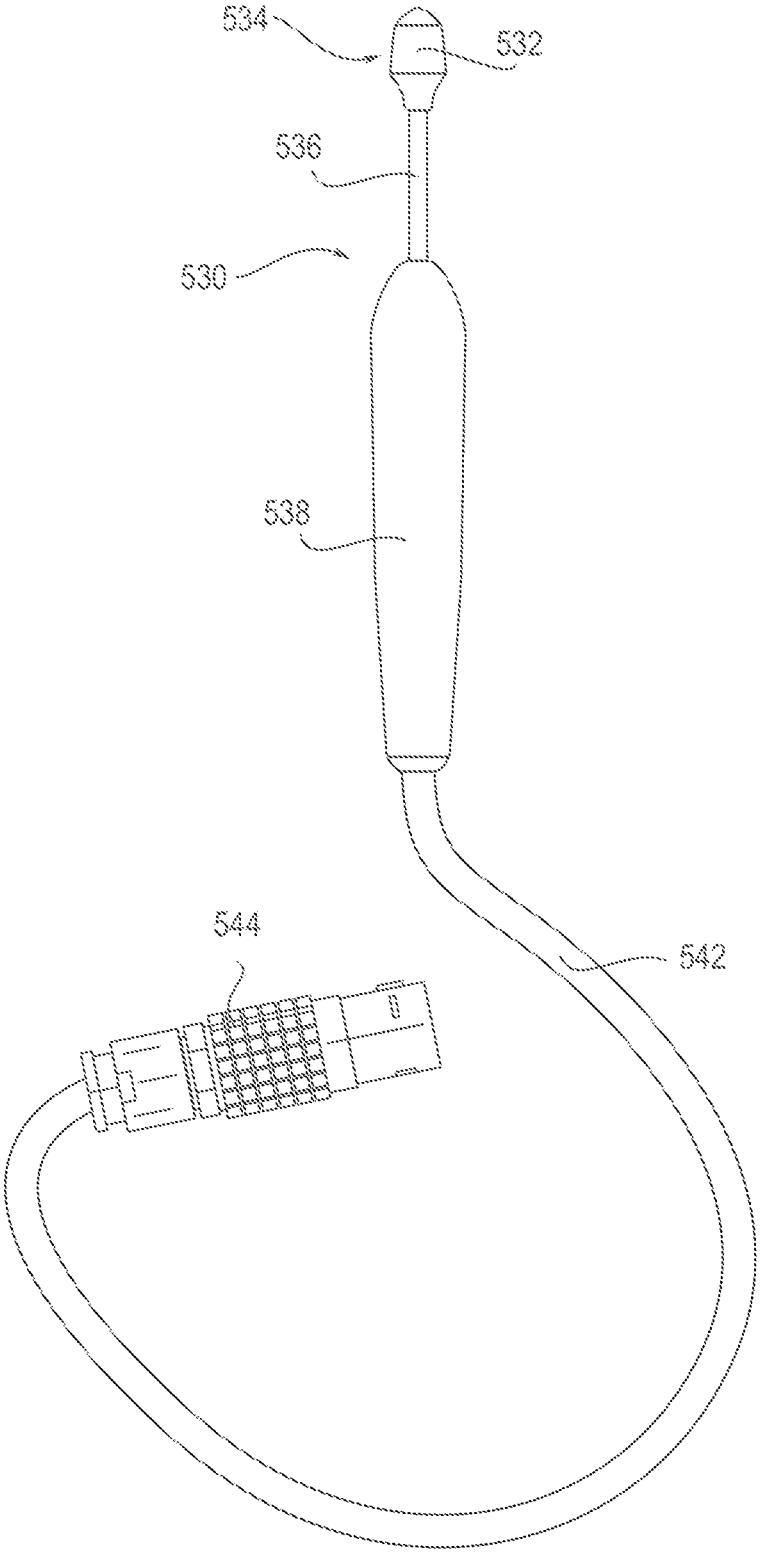

FIG. 22C

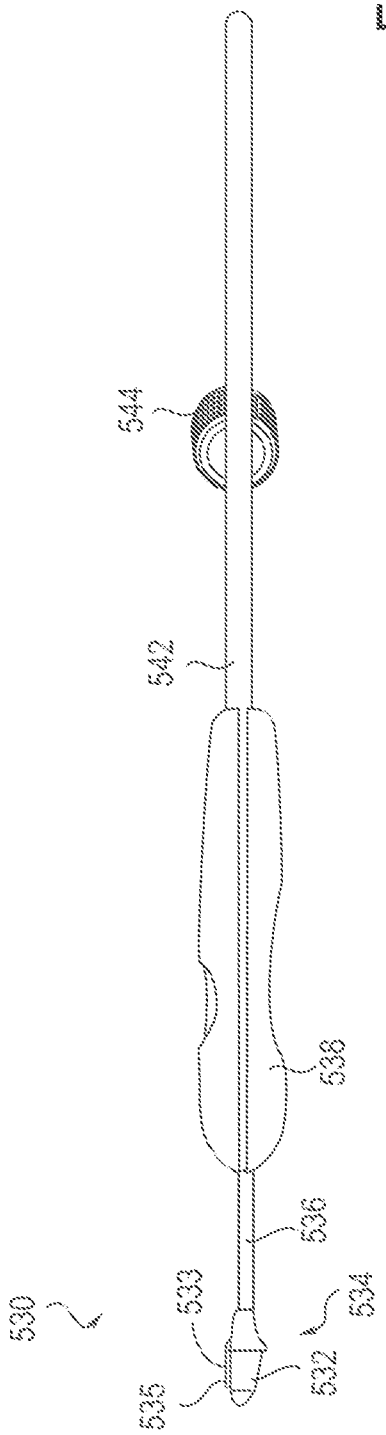

FIG. 22D

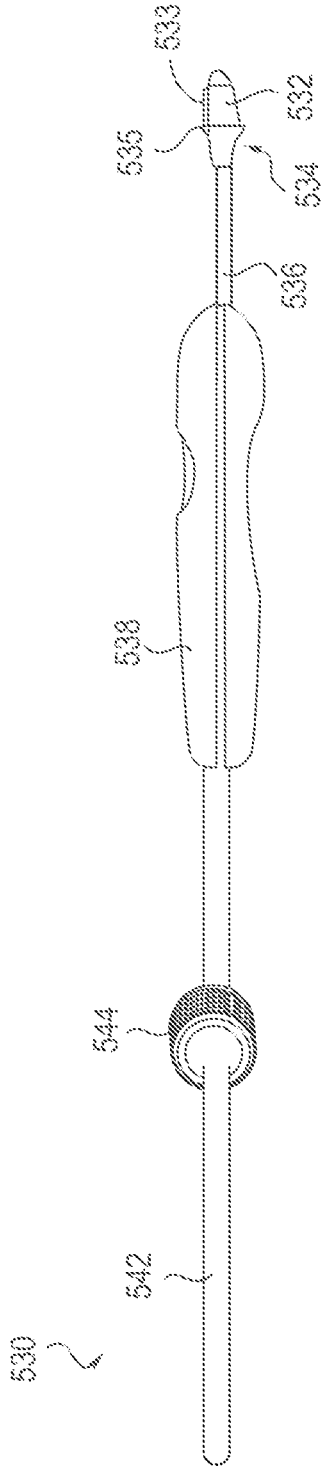

FIG. 22E

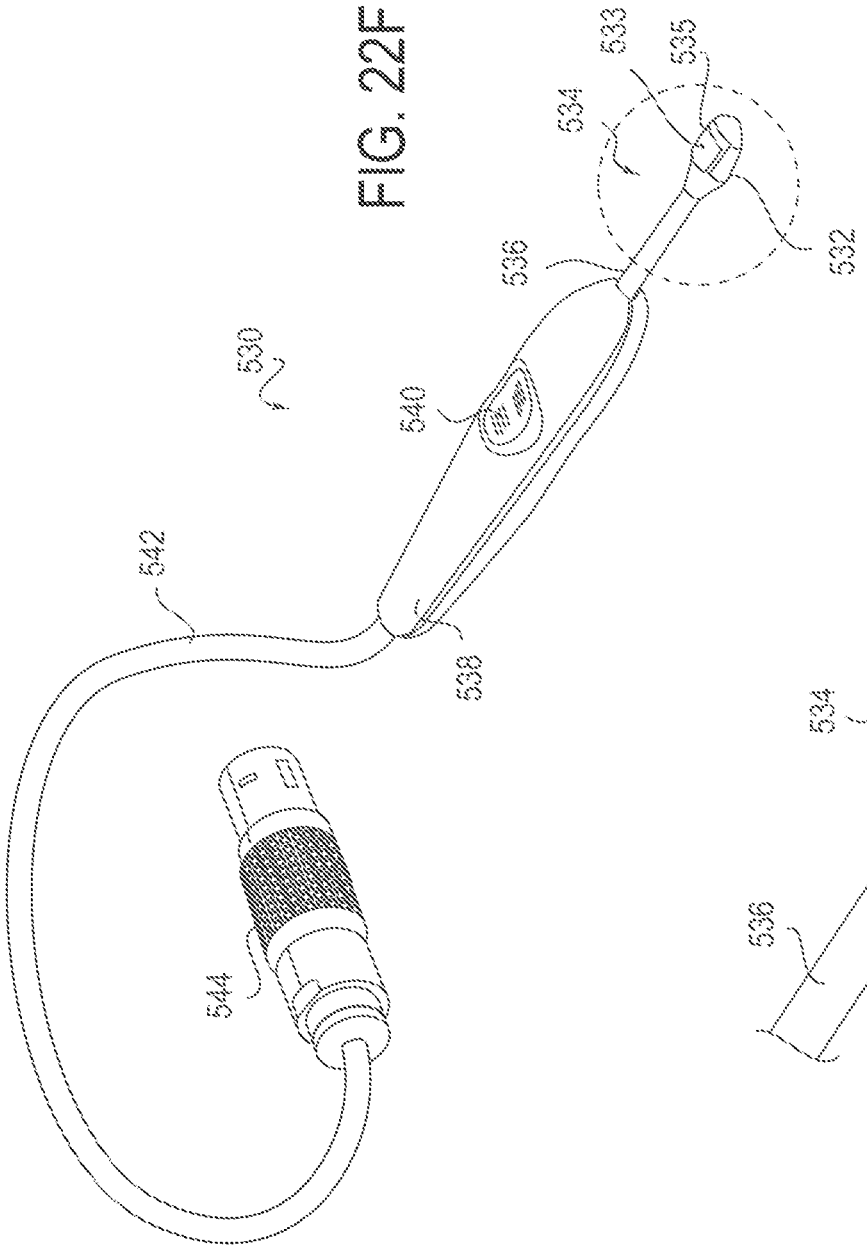

FIG. 22F

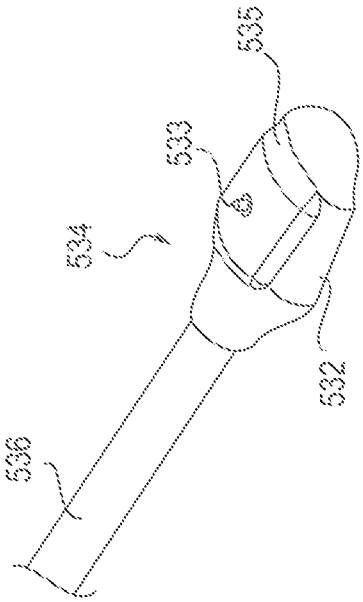

FIG. 22G

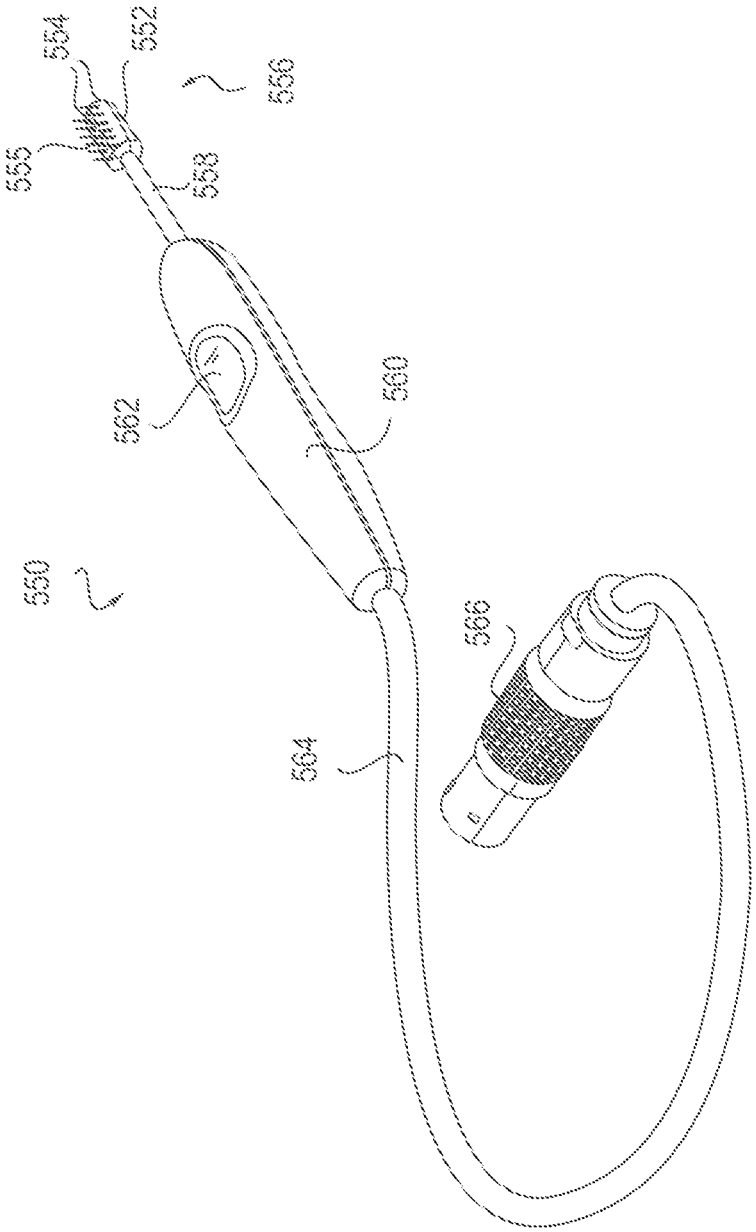

FIG. 23A

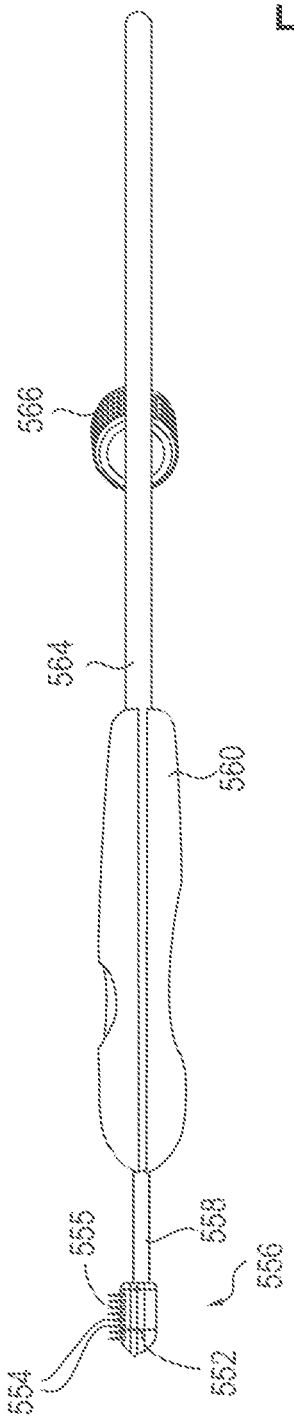

FIG. 23B

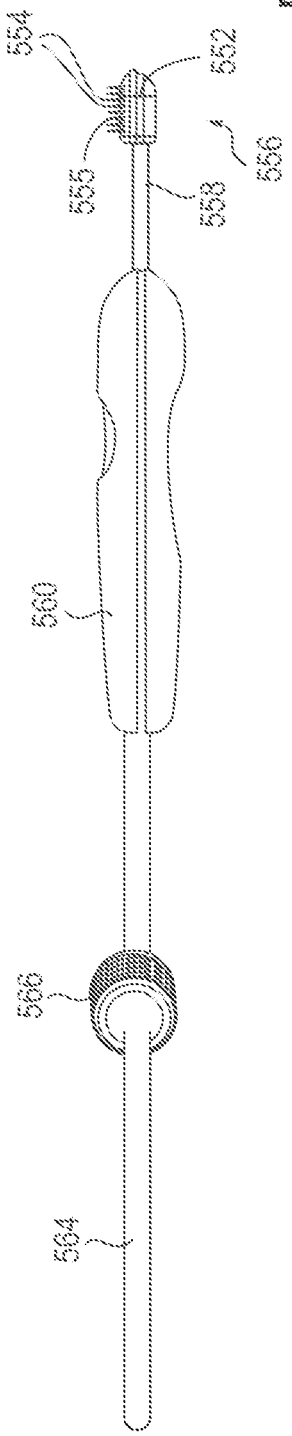

FIG. 23C

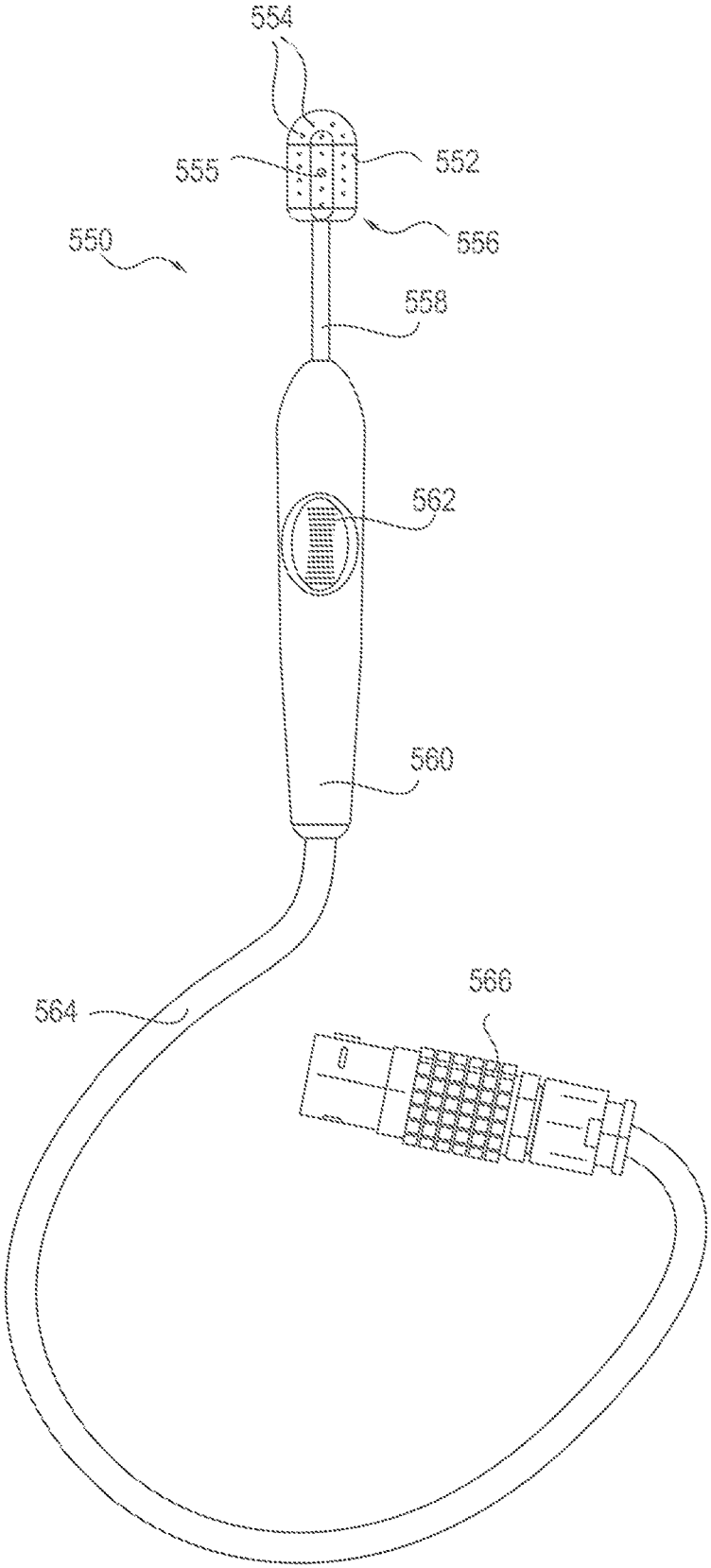

FIG. 23D

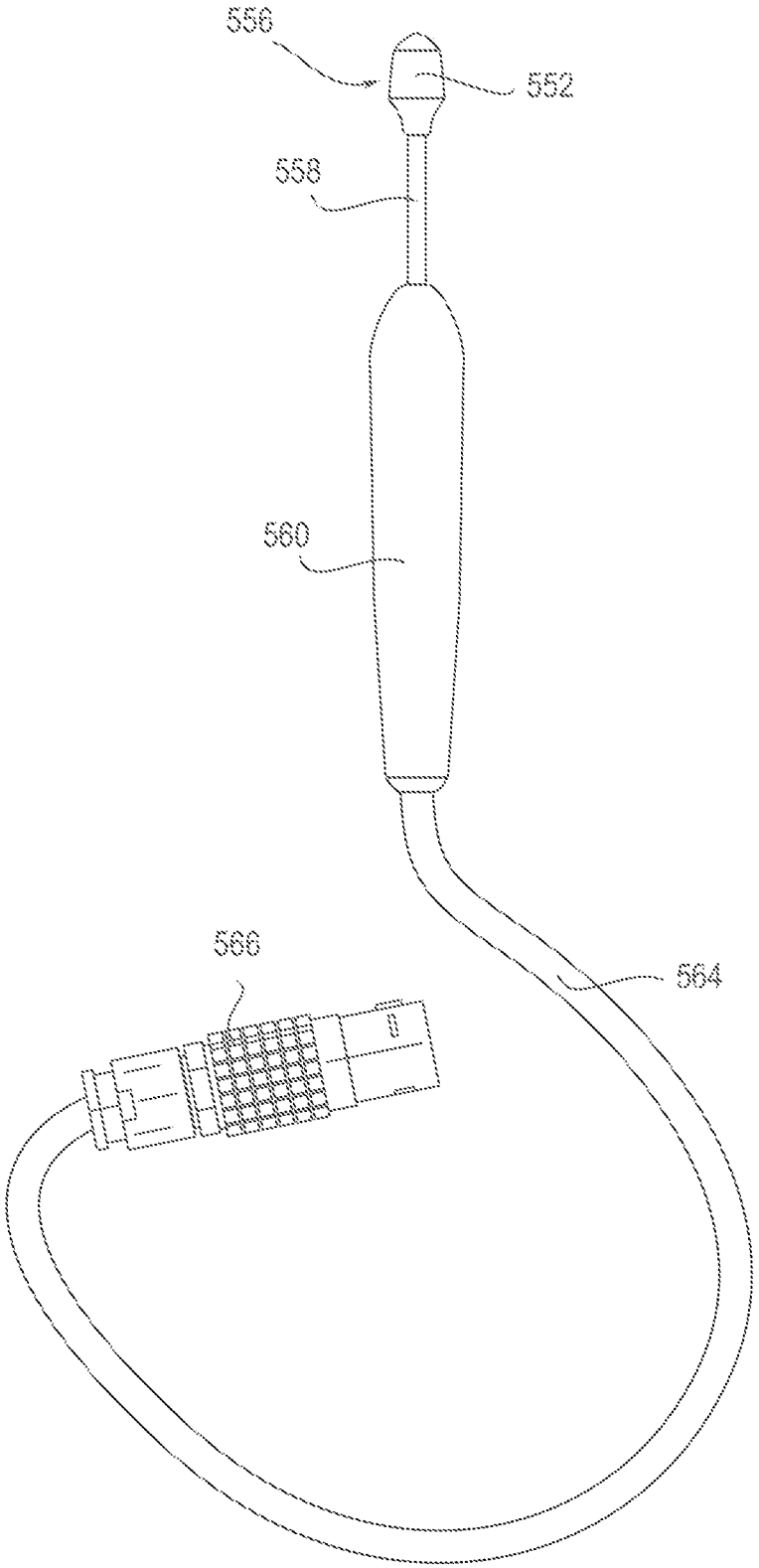

FIG. 23E1

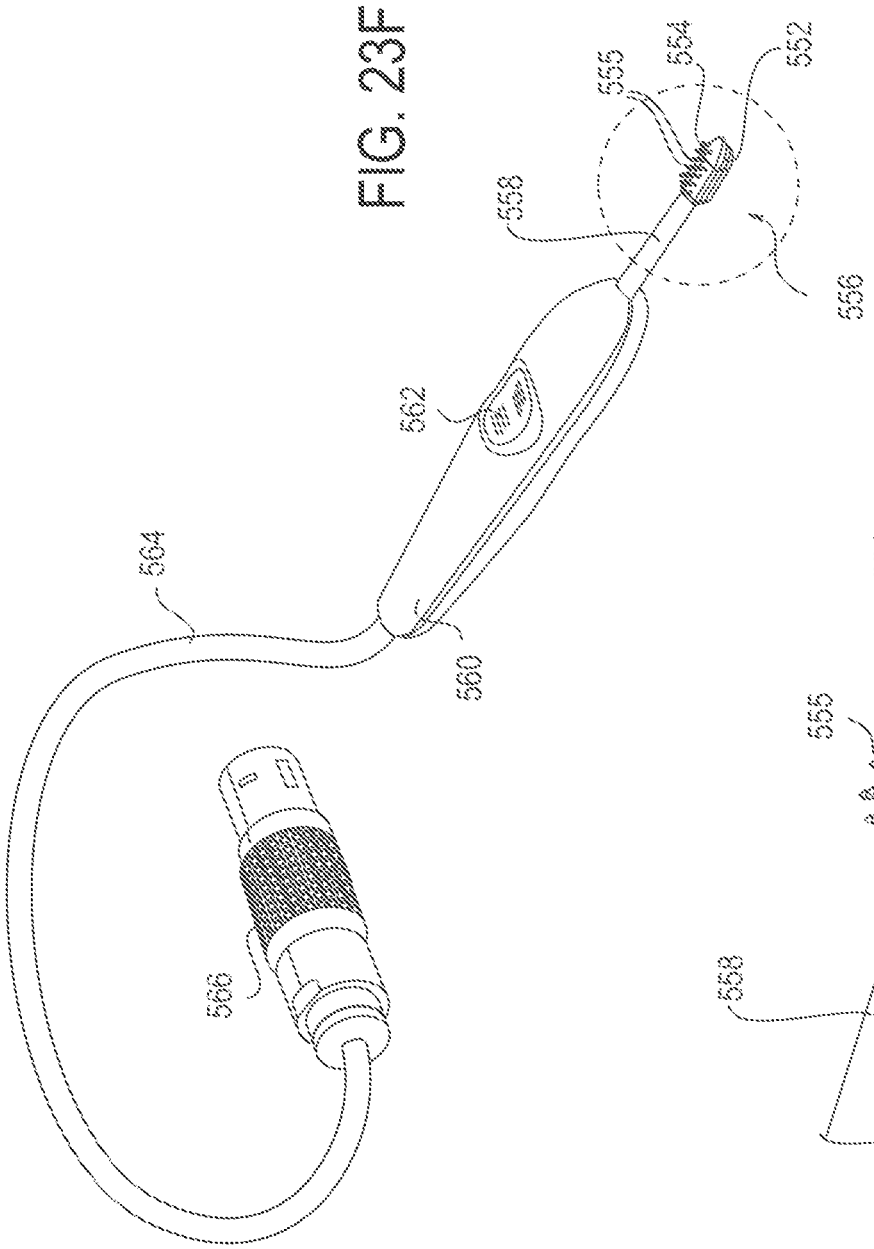

FIG. 23F

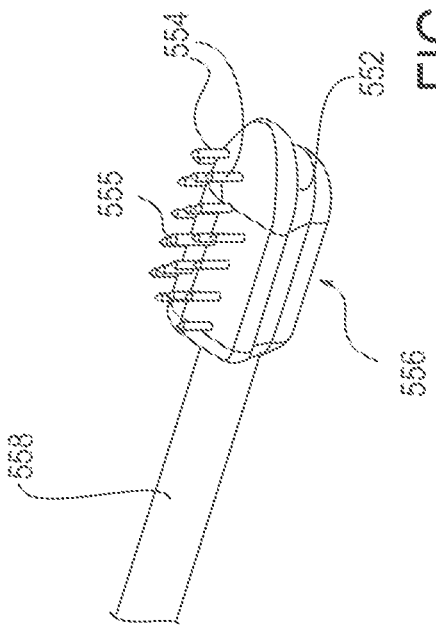

FIG. 23G

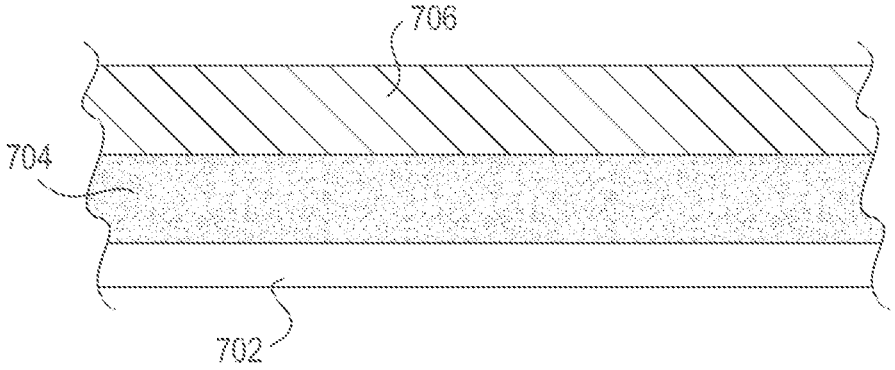

FIG. 24A

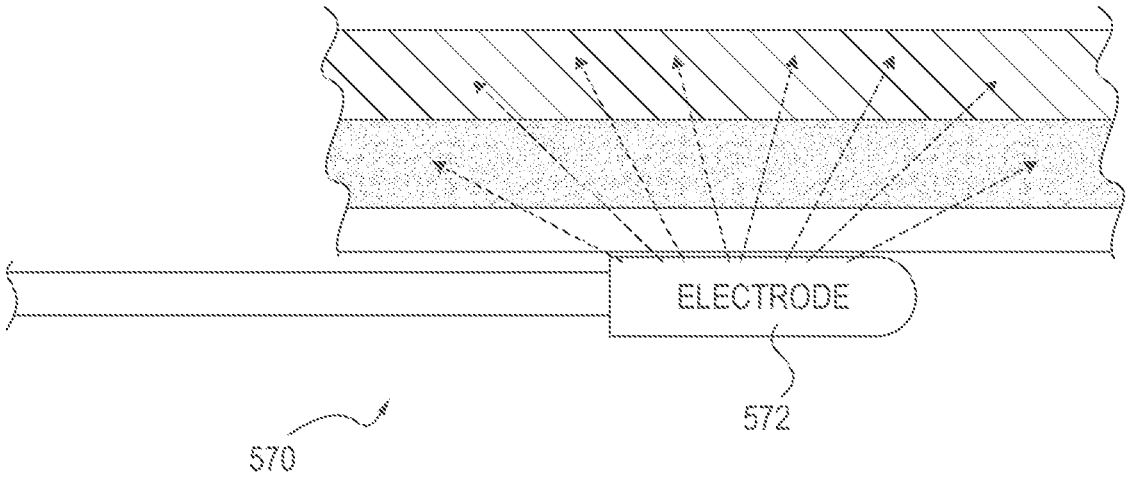

FIG. 24B

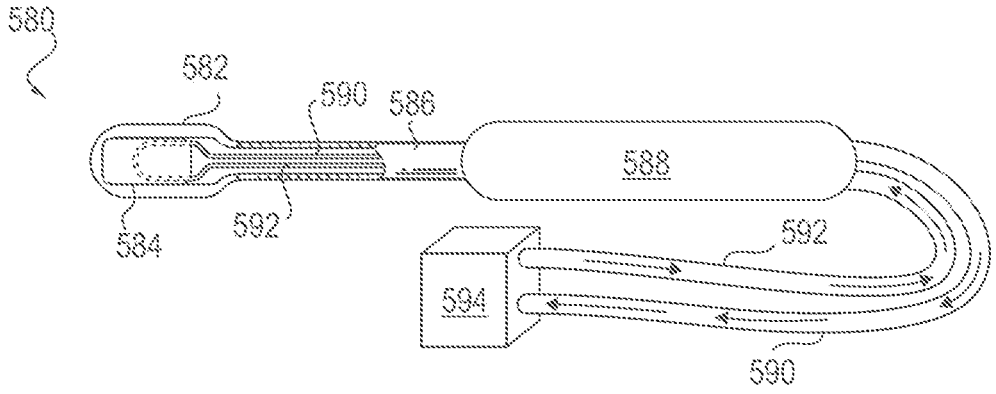

FIG. 25A

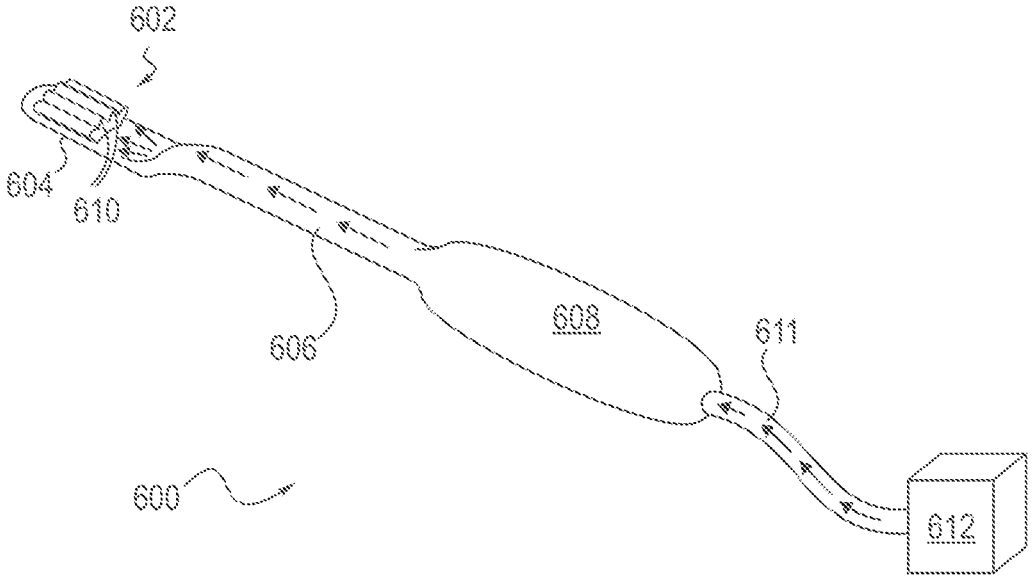

FIG. 25B

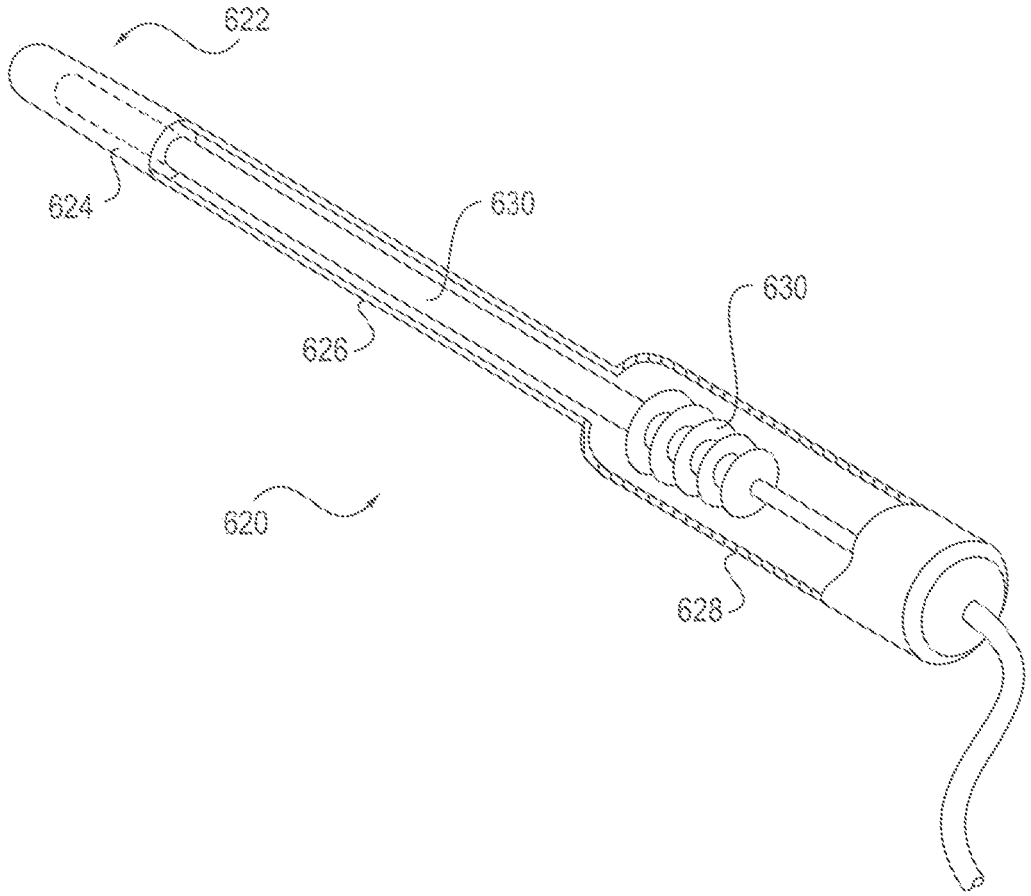
622
624
630
630
626
620
628

FIG. 26

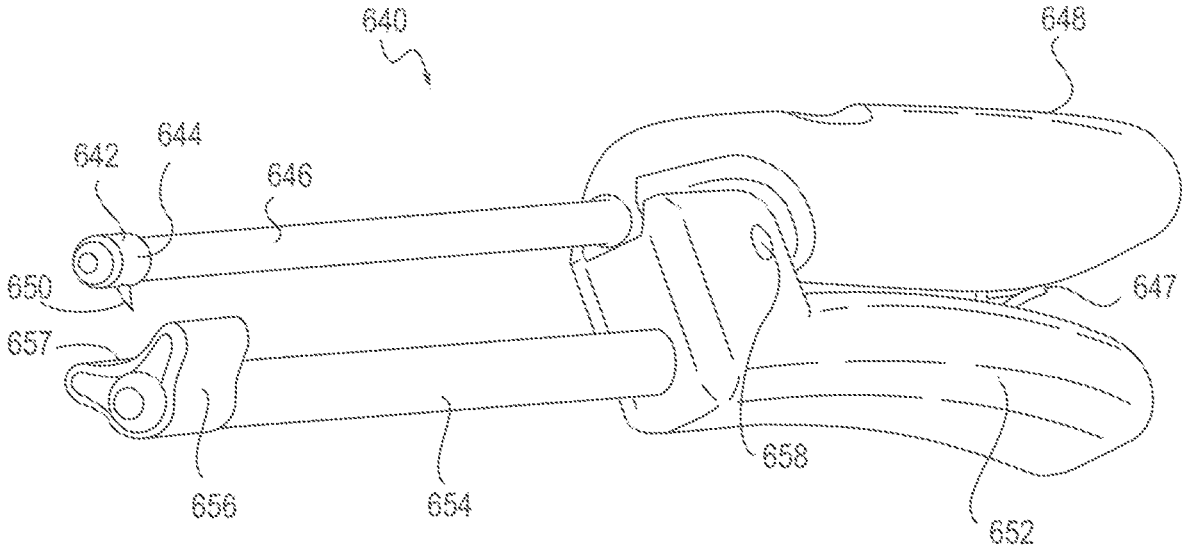
640
648
642
644
646
650
647
657
658
656
654
652

FIG. 27

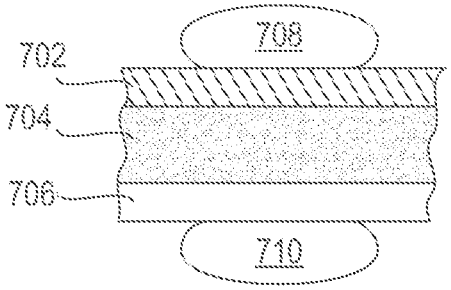

FIG. 28A

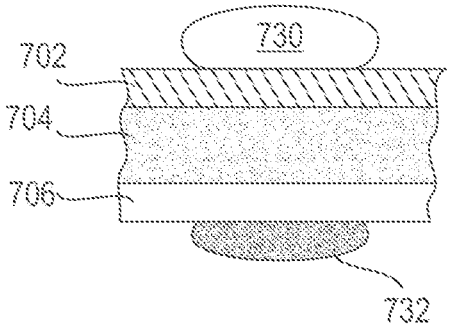

FIG. 28B

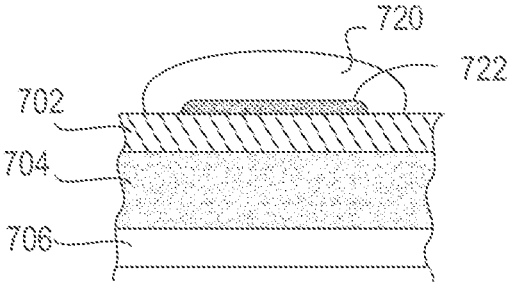

FIG. 28C

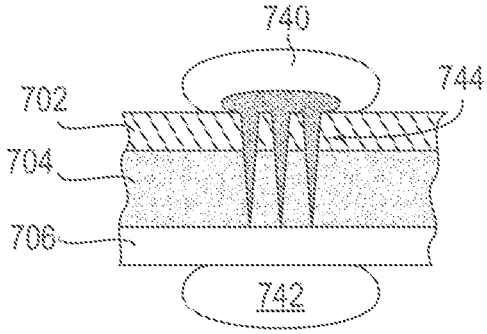

FIG. 28D

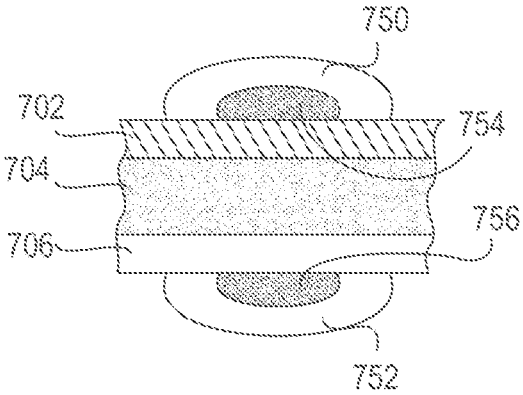

FIG. 28E

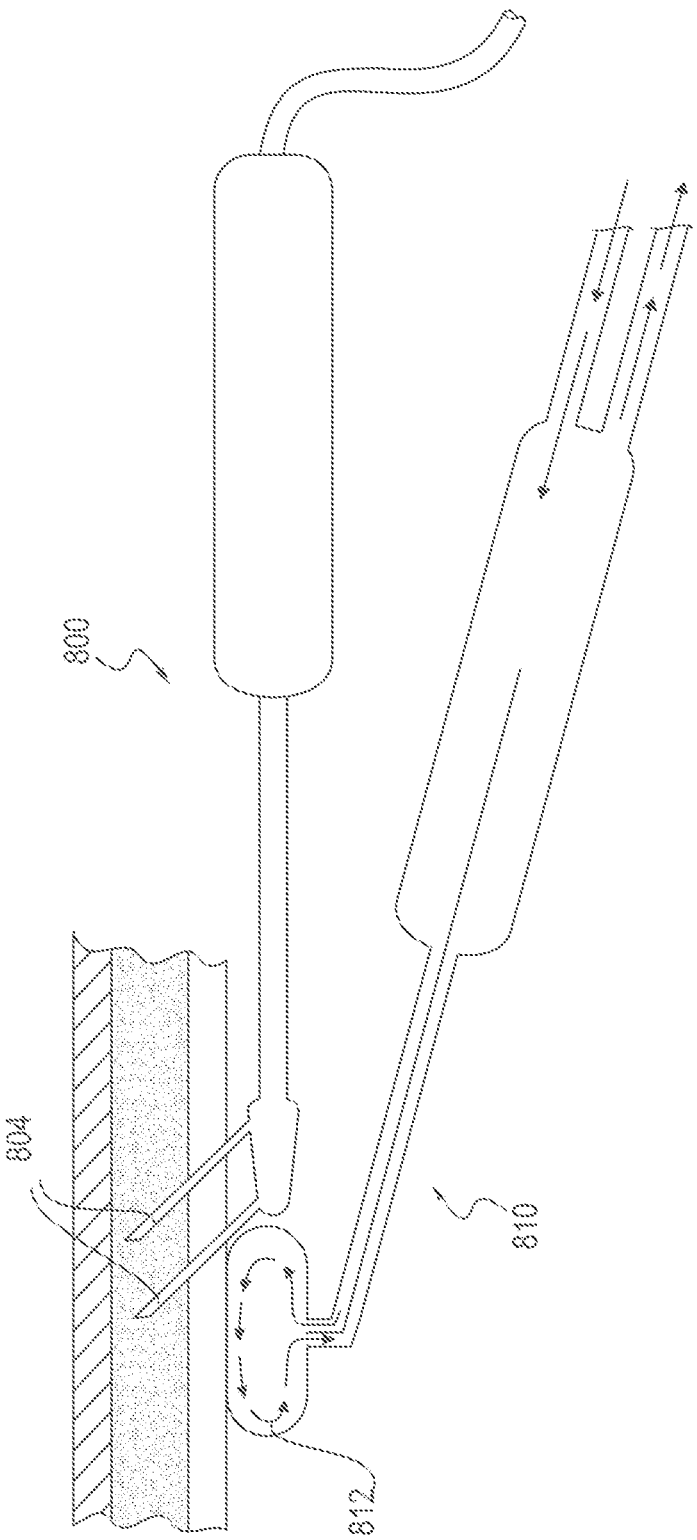

FIG. 29

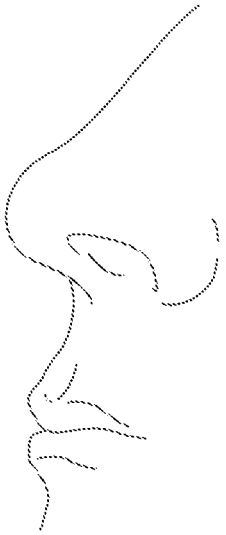

FIG. 30A

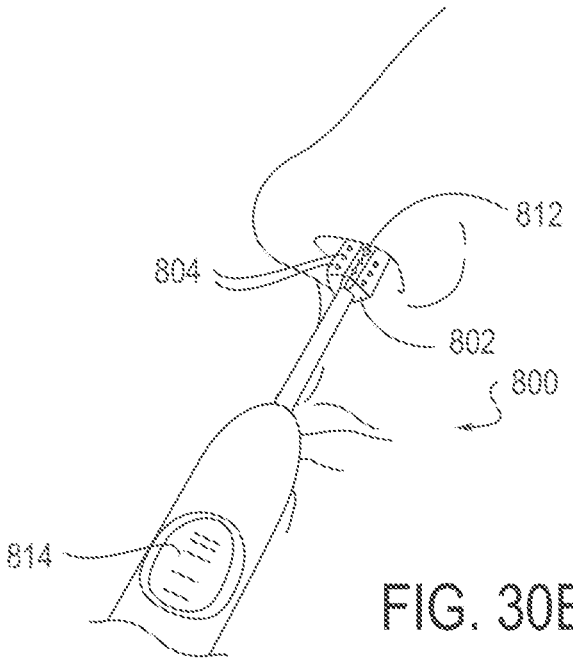

FIG. 30B

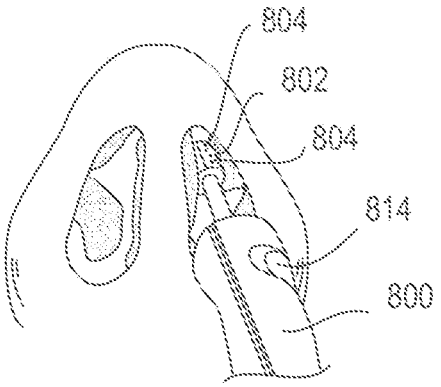

FIG. 30C

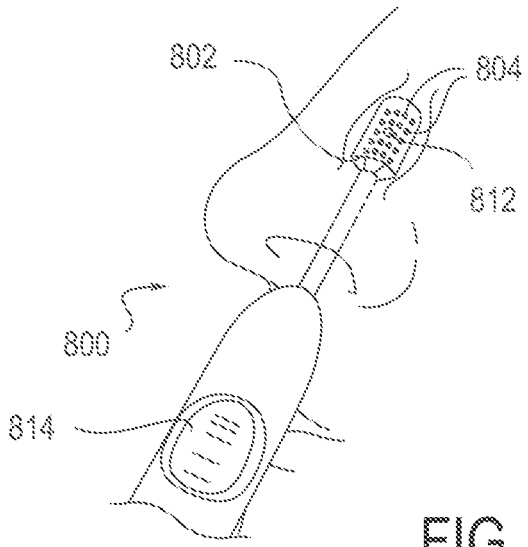

FIG. 30D

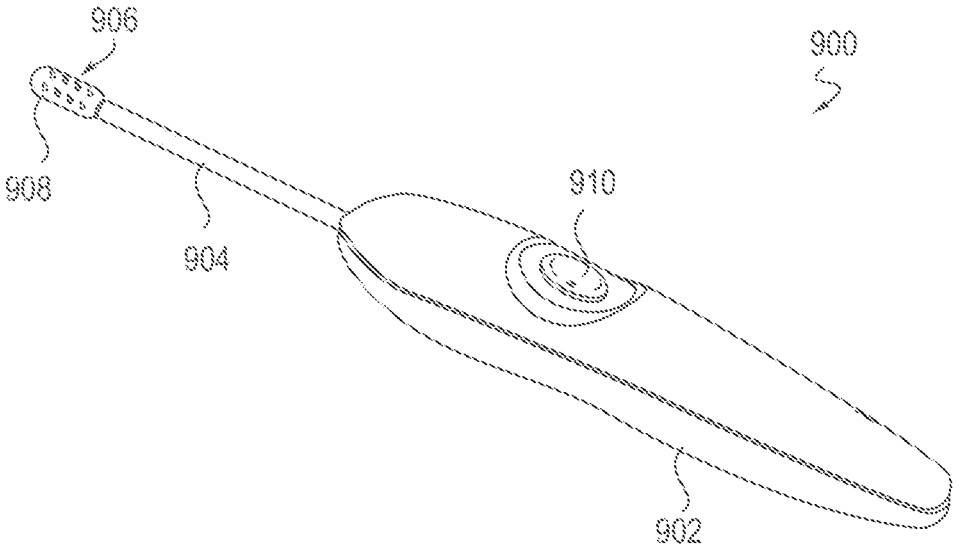

FIG. 31A

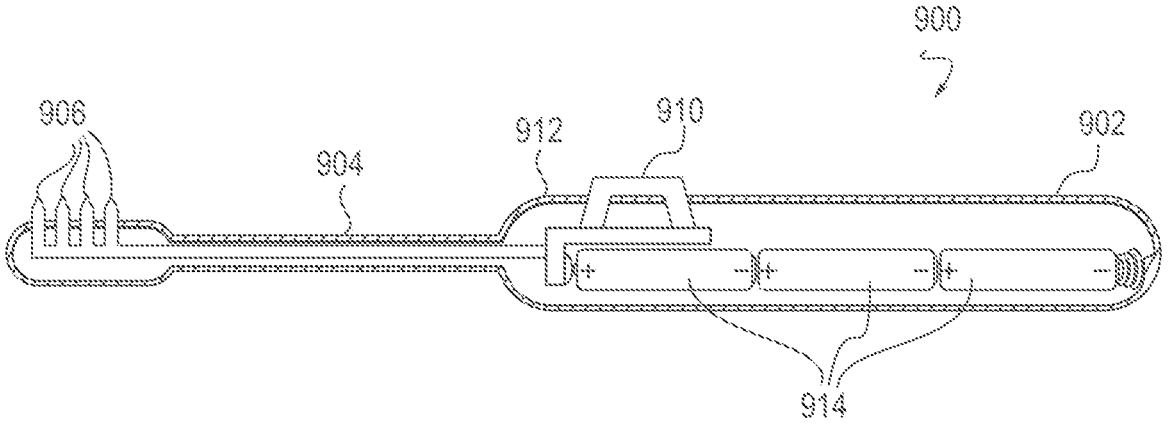

FIG. 31B

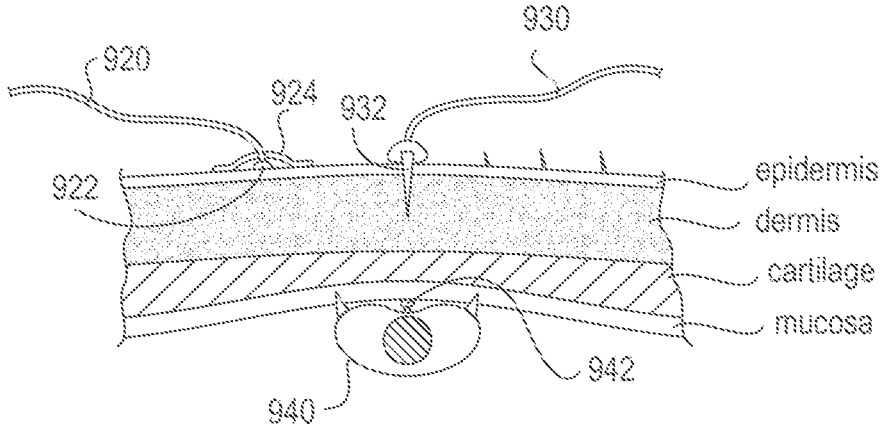

FIG. 32A

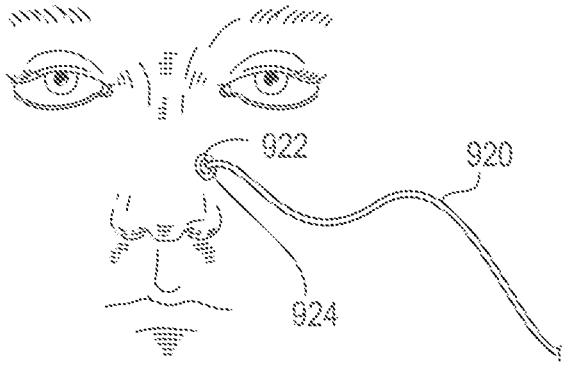

FIG. 32B

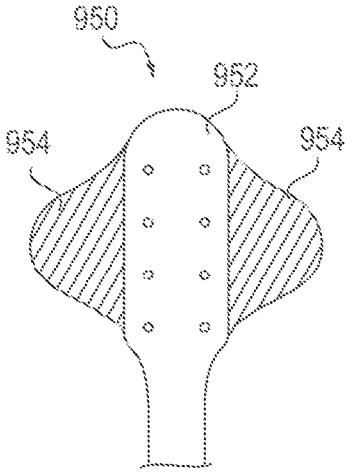

FIG. 33A

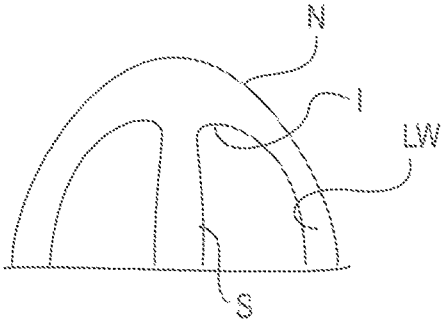

FIG. 33B

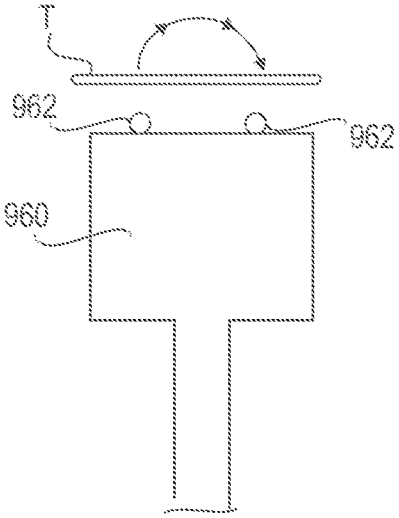

FIG. 34A

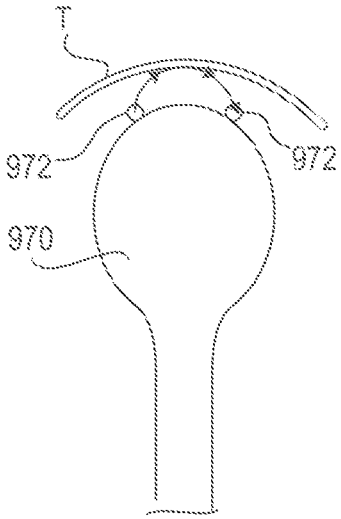

FIG. 34B

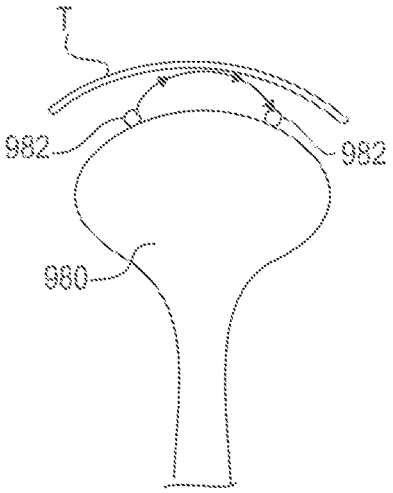

FIG. 34C

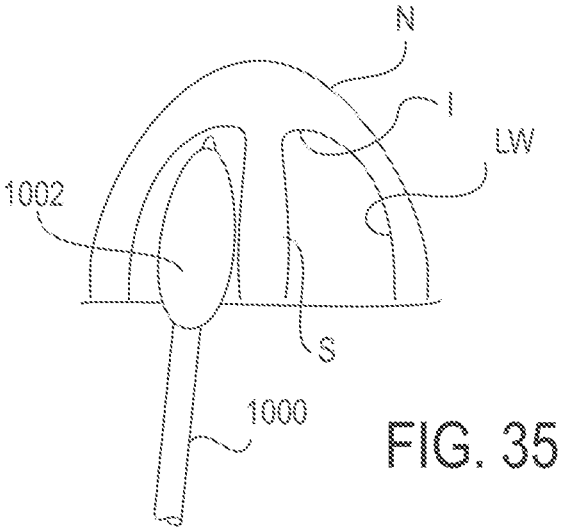

FIG. 35

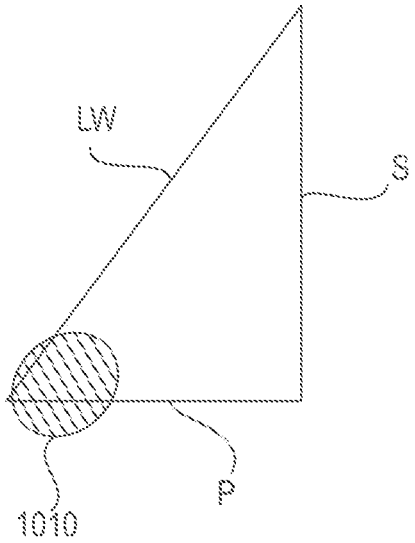

FIG. 36

METHODS OF TREATING NASAL AIRWAYS

CROSS-REFERENCE TO RELATED APPLICATIONS

This application is a continuation of U.S. patent application Ser. No. 15/596,455 filed May 16, 2017, which is a continuation of U.S. patent application Ser. No. 15/248,935, entitled "DEVICES TO TREAT NASAL AIRWAYS," filed Aug. 26, 2016, now U.S. Pat. No. 9,687,296, which is a continuation of U.S. patent application Ser. No. 14/864,428, now U.S. Pat. No. 9,433,463, entitled "DEVICES TO TREAT NASAL AIRWAYS," filed Sep. 24, 2015, which is a continuation of U.S. patent application Ser. No. 14/737,196, now U.S. Pat. No. 9,179,967, entitled "DEVICES TO TREAT NASAL AIRWAYS," filed Jun. 11, 2015, which is a continuation of U.S. patent application Ser. No. 14/607,639, now U.S. Pat. No. 9,179,964, entitled METHODS AND DEVICES TO TREAT NASAL AIRWAYS, filed Jan. 28, 2015, which is a continuation of U.S. patent application Ser. No. 14/026,922, now U.S. Pat. No. 8,986,301, entitled METHODS AND DEVICES TO TREAT NASAL AIRWAYS, filed Sep. 13, 2013, which is a continuation-in-part of U.S. patent application Ser. No. 13/495,844, now U.S. Pat. No. 8,936,594, entitled METHODS AND DEVICES TO TREAT NASAL AIRWAYS, filed Jun. 13, 2012, which claims priority to U.S. Provisional Patent Application Nos. 61/603,864, filed on Feb. 27, 2012 and 61/496,930, filed Jun. 14, 2011. The disclosures of all the above-referenced patent applications are hereby incorporated by reference in their entireties herein.

FIELD OF THE INVENTION

This application relates generally to the field of medical devices and treatments, and in particular to systems, devices and methods for treating structures within the nose and upper airway to reduce resistance to airflow and/or change the pressure level in the nose, nasal cavities, and/or and nasal passages and thus improve airflow and/or the feeling and effects of nasal obstruction during breathing and/or reduce snoring.

DESCRIPTION OF THE RELATED ART

During respiration, the anatomy, shape, tissue composition and properties of the human airway produce airflow resistance. The nose is responsible for almost two thirds of this resistance. Most of this resistance occurs in the anterior part of the nose, known as the internal nasal valve, which acts as a flow-limiter. The external nasal valve structure also causes resistance to nasal airflow. Effective physiological normal respiration occurs over a range of airflow resistances. However, excessive resistance to airflow can result in abnormalities of respiration that can significantly affect a patient's quality of life.

Inadequate nasal airflow can result from a number of conditions causing an inadequate cross sectional area of the nasal airway in the absence of any collapse or movement of the cartilages and soft tissues of the nasal airway. These include deviation of the nasal septum, turbinate enlargement, mucosal swelling, excessive mucus production, and nasal valve insufficiency, narrowing or collapse. No matter what the cause of inadequate nasal airflow, the nasal valve area is still the site of significant nasal airflow resistance. In more extreme cases, nasal valve dysfunction is a prevalent

medical condition. Nasal valve collapse is often due to weakness or malformation of cartilage structures of the nose.

Inadequate nasal airflow can also result from the movement of tissues of the nasal passage during respiration. The nasal passage may have normal anatomy and structure with a nasal passage cross-sectional area in the normal range at rest or during expiration. On inspiration of air through the nose, the nasal tissues can move inward, reducing the cross sectional area of the nasal passage. This movement, sometimes called nasal valve collapse, can be caused by the reduction of pressure in the nose when air flows past the structure of the nose. This pressure reduction pulls the tissues of the nasal passage together, causing a dynamic nasal passage cross sectional area reduction on inspiration.

The walls of the nasal passage are composed of various tissue types, including the mucosa, submucosa, basal membrane and cartilage. The mucosa, submucosa and basal membrane contain collagen, which gives the tissue structure and elasticity.

Cartilage is an avascular tissue composed of a specialized matrix of collagens, proteoglycans, and non-collagen proteins, in which chondrocytes constitute the unique cellular component. Cartilage is specialized connective tissue found in various locations throughout the body. Cartilage basically consists of two components: water and a framework of structural macromolecules (matrix) that give the tissue its form and function. The matrix is highly organized and composed of collagens, proteoglycans and noncollagenous proteins.

The interaction of water and the macromolecular framework gives the tissue its mechanical properties and thus its function. Up to 65%-80% of the wet weight of cartilage consists of water, and the rest is matrix, mainly collagens and proteoglycans. Chondrocytes are specialized cells that produce and maintain the extracellular matrix (ECM) of cartilage. The ECM makes up most of the tissue, where dense, covalently-linked heterotypic collagen fibrils interact with a number of other specialized matrix components.

The nasal valve was originally described by Mink in 1903. It is divided into external and internal portions. The external nasal valve is the external nasal opening formed by the columella at the base of the septum, the nasal floor, and the nasal rim (the lower region of the nasal wall, also known as the caudal border of the lower lateral cartilage). The nasalis muscle dilates the external nasal valve portion during inspiration.

The internal nasal valve, which accounts for the larger part of the nasal resistance, is located in the area of transition between the skin and respiratory epithelium. The internal nasal valve area is formed by the nasal septum, the caudal border of the upper lateral cartilage (ULC), the head of the inferior turbinate, and the pyriform aperture and the tissues that surround it.

The angle formed between the caudal border of the ULC and the nasal septum is normally between about 10 degrees and about 15 degrees, as illustrated in FIG. **1**. The internal nasal valve is usually the narrowest part of the nasal airway and is responsible for more than two thirds of the resistance produced by the nose.

In 1894, Franke performed nasal-flow experiments in models and cadavers and found that whirl formation occurred near the head of the turbinate during calm breathing. Mink developed this concept further in 1920, suggesting that the greatest area of resistance was in the limen nasi or the union of the lobular cartilage and ULCs. In 1940, Uddstromer found that 70% of the resistance of the nose was produced in the internal nasal valve area, and the remaining

30% was due to the nasal fossa. Van Dishoeck further investigated the mechanisms of the nasal valve in 1942, and in 1970, Bridger and Proctor wrote about a "flow-limiting segment" that included the limen nasi and the pyriform aperture. In 1972, Bachman and Legler found the pyriform aperture to have the smallest cross-sectional area of the nasal airway. In 1983, Haight and Cole continued the study of Bridger and Proctor and demonstrated that the maximal nasal resistance was localized near the pyriform aperture and depended on engorgement of the head of the inferior turbinate. The nasal valve and its functions are more fully described in Cole, "The Four Components of the Nasal Valve," American Journal of Rhinology, Vol. 17, No. 2, pp. 107-110 (2003). See also, Cole, "Biophysics of Nasal Air Flow: A Review," American Journal of Rhinology, Vol. 14, No. 4, pp. 245-249 (2000).

Because ventilation involves pressure changes, the nasal airways must be stable both at rest and under the negative pressures created during quiet and forced inspiration. Proper airflow through the nasal airway depends on satisfactory structural stability (and/or resistance to conformational change resulting from pressure changes) of the upper and lower lateral cartilages and soft tissues respectively. Satisfactory skeletal stability is present when the upper and lower lateral cartilages have sufficient structural stability to resist conformational changes resulting from air pressure changes. When either the skeletal or the soft tissue component is congenitally deficient or has been compromised by surgery or trauma, the patient experiences a conformation change of the valves during inspiration, with resultant change in the airflow and/or pressure in the nasal airway. Normally, the upper lateral cartilages move, change shape, partially collapse and/or change nasal airway pressure with all ventilatory flow rates. Thus, even normal nasal valves are affected by respiration. However, a patient with dynamic nasal valve dysfunction may have a nasal airway walls that inadequately resist the pressure changes and restrict airflow even during normal nasal breathing.

Inadequate nasal valve structural strength, stiffness or conformation can be a consequence of previous surgery, trauma, aging, or primary weakness of the upper lateral cartilage and is often symptomatic and debilitating. As many as 13% of patients with chronic nasal obstruction have some degree of nasal valve collapse. Of these patients, 88% have unilateral collapse.

Poor nasal breathing and/or nasal congestion has profound effects on a person's health and quality of life, which can be measured by validated questionnaires such as the NOSE score, as described in Stewart M G, Witsell D L, Smith T L, Weaver E M, Yueh B, and Hannley M T., "Development and Validation of the Nasal Obstruction Symptom Evaluation (NOSE) Scale," Otolaryngol Head Neck Surg 2004; 130:157-63.

Causes of inadequate nasal airflow and the structure of nasal valve inadequacy can be clinically detected by direct visualization (preferably with minimal disturbance so as not to alter the structure by visualizing) or endoscopic examination. Alternatively, CT, MRI, ultrasound or other non-invasive imaging technologies may be employed. One method of evaluating the potential improvement in nasal airflow from widening the nasal valve area is the cottle test, which involves gently pulling the skin of a patient's cheek laterally away from the nose with two fingers, thereby opening the internal nasal valve.

Existing methods of correcting nasal valve inadequacy include surgically repositioning the upper lateral cartilage or adding structural grafts to support the lateral wall of the nose. Surgical structural enhancement of the valve can include the use of cartilage grafts and grafts made from a number of materials. The most frequent methods surgically correct internal nasal valve collapse and involve the use of spreader grafts placed between the upper lateral cartilage and septum. Alternately, stents, spreaders or other devices may be implanted to reposition the ULC. Invasive surgical and implant solutions carry substantial risk and discomfort.

External (non-implanted) nasal dilators, which are placed temporarily and removed by the patient, are also available. Such external devices are possibly placed on the outside surface of the nose, such as the "Breathe Right" strips, as shown for example in U.S. Pat. No. 5,533,499 to Johnson, or similar devices taught by U.S. Pat. No. 7,114,495 to Lockwood. Other devices may be temporarily placed in the nasal cavity (but not implanted in the nose), such as those taught in U.S. Pat. No. 7,055,523 to Brown, and U.S. Pat. No. 6,978,781 to Jordan. However, such devices can be uncomfortable, unsightly, and require the patient to remove and replace the device on a periodic basis. These devices can also cause skin irritation.

Poor nasal airflow can also occur in people with a structurally normal nasal and/or nasal valve anatomy, as well as a normal nasal passage cross-sectional area. The strength, structure and resistance to collapse of the nasal passage can also be normal in people with poor nasal airflow. People can have poor nasal airflow from other causes, including deviated septum, allergic rhinitis, non-allergic rhinitis, turbinate hyperplasia, nasal tip ptosis, and nasal polyposis. Whatever the cause, the tissues of the nasal valves are intimately involved in nasal airflow and nasal airflow inadequacy. Thus, there remains an unmet need in the art for non-invasive and minimally invasive methods and devices to improve nasal airflow.

SUMMARY

Embodiments of the present application are directed to devices, systems and methods for treating nasal airways. Such embodiments may be utilized to improve breathing by decreasing airflow resistance or perceived airflow resistance in the nasal airways. For example, the devices, systems and methods described herein may be utilized to reshape, remodel, strengthen, or change the properties of the tissues of the nose, including, but not limited to the skin, muscle, mucosa, submucosa and cartilage in the area of the nasal valves.

According to one aspect, a device for treating a patient's nasal airway is provided. In one embodiment, the device comprises an energy delivery element sized to be inserted into a nose or to be delivered external to a nose. The energy delivery element is configured to deliver energy to tissues within the nose and to reshape a region of the nose to a new conformation.

According to one embodiment, a device for treating a patient's nasal airway comprises an elongate shaft having a proximal end and a distal end. The device further comprises a handle at the proximal end of the elongate shaft. The device also comprises a treatment element at the distal end of the elongate shaft. The treatment element is sized to be inserted into the nasal airway or to be delivered external to a nose. The treatment element is configured to reshape a region of the nose to a new conformation and comprises an electrode configured to deliver radiofrequency (RF) energy to the nasal tissue.

Other embodiments of devices for treating a patient's nasal airway include devices that apply other types of

treatment. For example, a treatment device may apply energy in the form selected from the group consisting of ultrasound, microwave, heat, radiofrequency, electrical, light and laser. The treatment device may also be configured to inject a polymerizing liquid or to deliver a cauterizing agent to nasal tissue. Other embodiments are described below.

The devices described herein may be configured to be positioned internally within the nose, external to the nose, or both. Certain embodiments are configured to be delivered into one nostril, and other embodiments are configured to be delivered into both nostrils. In some embodiments the device may comprise a reshaping element having a shape configured to alter a conformation of a region of the nose to a new conformation. For embodiments utilizing an energy delivery element, the reshaping element may be a separate element from the energy delivery element, or the energy delivery element and the reshaping element may be part of the same element. The energy delivery element and/or reshaping element in one embodiment may have a convex shape to create a concavity in nasal tissue.

In embodiments utilizing energy delivery, a handle may be provided comprising a button or other input control to active one or more electrodes. Electrodes may comprise one or more monopolar needles, one or more monopolar plates, or one or more bipolar electrode pairs (which may also comprise one or more needles or plates). These electrodes may be located in various locations, for example, inside the nasal passageway, external to the nose or both. For example, when using bipolar electrode pairs, a first electrode surface may be positioned internal to the nose and a second electrode surface may be positioned external to the nose, so that the two electrode surfaces are positioned on opposite sides of nasal tissue.

The device of one energy delivery embodiment may comprise an adaptor configured to be connected to an energy source, such as an RF energy source. The device may also comprise a control system configured to control the characteristics of energy applied to tissue. A thermocouple or other sensor may be provided to measure a temperature near tissue or other tissue or device parameter.

In another aspect, a system is provided comprising a device as described above and further below in combination with one or more other components. One such component may be an energy source, such as an RF energy source. Another component may be a control system for controlling the energy source and/or treatment device. In another embodiment, the device or system may comprise a cooling mechanism to cool desired tissue locations while treatment is being applied. In monopolar electrode embodiments, a grounding pad may also be provided as part of the system. Another system includes a positioning device that may be used pre-treatment to determine the optimal device and positioning and/or other parameters for using the device to be treat to the nasal airway.

According to another aspect, a method of treating a patient's nasal airway is provided. In one embodiment, the method comprises alerting a structure, shape or conformation of one or more nasal structures in an area of a nasal valve by applying a treatment sufficient to modify, by reshaping, tissue at or adjacent to the nasal valve.

According to one embodiment, a method of treating a patient's nasal airway comprises positioning a treatment element within the nasal airway adjacent to nasal tissue to be treated. The treatment element comprises one or more electrodes, such as described above and in further detail below. The method further comprises deforming the nasal tissue into a desired shape by pressing a surface of the treatment element against the nasal tissue to be treated. The method further comprises delivering radiofrequency (RF) energy to the one or more electrodes to locally heat the nasal tissue, wherein delivering RF energy while deforming the nasal tissue causes the nasal tissue to change shape. The method also comprises removing the treatment element from the nasal airway.

The methods, devices and systems described herein may be used to reshape tissue without a surgical incision or implant. In certain embodiments, the reshaping of tissue may be accomplished by ablating tissue. In other embodiments, the reshaping of tissue is accomplished without ablation of tissue. In one embodiment, a treatment element is positioned within a nasal passageway. The treatment element may be used to simultaneously mechanically alter the shape of the internal or external nasal valve and apply treatment to tissue of the nose. The treatment applied may comprise modifying a nasal structure in a manner that increases a volumetric airflow rate of air flowing from an exterior of the patient's body into the patient's nasopharynx without changing a shape of an internal nasal valve, said modifying comprising modifying a mechanical property of at least one nasal valve. A positioning element may be used to determine a desired position of a treatment element before the treatment element is delivered to the nasal tissue.

The treatment may involve delivering energy in the form selected from the group selected from the group consisting of ultrasound, microwave, heat, radiofrequency, electrical, light and laser. The nasal tissue to be treated may be cooled prior to, during or after delivering energy. Delivering energy may comprise measuring a temperature near nasal tissue to be treated, and adjusting a level of energy delivered to the tissue. When RF or other types of energy are used, the energy may be delivered to at least one of the nasal valve, tissue near the nasal valve, or the upper lateral cartilage of tissue. For example, RF energy or other energy may be delivered to the one or more electrodes for about 15 seconds to about 1 minute. RF energy or other energy may be delivered to heat an area of tissue to a temperature of about 50 degrees Celsius to about 70 degrees Celsius.

Other methods not utilizing energy delivery include injecting a polymerizing liquid, delivering a cauterizing agent, or other embodiments described below.

Energy or treatment may be delivered for a sufficient period of time or in a sufficient quantity to cause a desired effect. For example, the treatment may cause stress relaxation in the nasal tissue without weakening the tissue. The treatment may also be applied to injure a tissue to be re-shaped.

In another aspect, a method of modifying at least one property of at least one tissue of or near a nasal valve of a nose, without using a surgical incision or an implant, to decrease airflow resistance or perceived airflow resistance in a nasal airway, may involve: contacting a treatment element of a treatment device with the at least one tissue inside the nasal airway, with sufficient force to at least temporarily deform the at least one tissue; applying energy to, or removing energy from, the at least one tissue, using the treatment element; and removing the treatment element from the nostril.

In some embodiments, the treatment element may have a convex shape, such that contacting the treatment element against the at least one tissue at least temporarily deforms the tissue into a concave shape. In some embodiments,

contacting the treatment element with the tissue causes at least one protrusion on the treatment element to deform the tissue.

Different types of energy that may be applied in alternative embodiments may include, but are not limited to, ultrasound, microwave, heat, radiofrequency, electrical, light and laser energy. In some embodiments, applying the energy involves delivering radiofrequency energy to one or more electrodes of the treatment element to locally heat the at least one tissue, where delivering radiofrequency energy while deforming the at least one tissue causes the tissue to change shape.

In some embodiments, the at least one tissue may include nasal valve tissue. In some embodiments, the at least one tissue may include nasal mucosa at or near a junction of a pyriform aperture and a lower lateral cartilage. In some embodiments, the at least one tissue may include upper lateral cartilage.

In one embodiment, removing energy may involve using cryogenic therapy provided by the treatment element. In some embodiments, the energy is applied to or removed from the at least one tissue while the at least one tissue is deformed. In some embodiments, the energy applied by the treatment element may be generated from a power source within the treatment device.

Optionally, the method may further involve injecting a substance into the at least one tissue prior to applying the energy, where the applied energy affects the injected substance to help modify the property of the tissue. In other embodiments, the method may involve applying a substance to the at least one tissue or to an outer surface of the nose before applying the energy. Substances may provide any of a number of suitable benefits, such as reducing pain, increasing conductivity of tissue, promoting tightening of tissue, or the like.

In some embodiments, the property of the tissue is modified without reshaping the at least one tissue. In some embodiments, modifying the property comprises stiffening the tissue, with or without reshaping it. The tissue (or tissues) can be any suitable tissue, such as but not limited to epithelium, cartilage, mucosa, sub-mucosa, muscle, ligament, tendon and skin.

Some embodiments may further involve cooling the at least one tissue and/or other tissues in or on the nose, before, during, or after applying the energy. In some embodiments, the method may also involve measuring at least one parameter at or near the at least one tissue to be treated and adjusting a level of energy application or removal, based on the measured parameter. For example, in some embodiments, the parameter may be temperature and/or impedance.

In another aspect, a method of treating a nasal valve of a nose, without using a surgical incision or an implant, to decrease airflow resistance or perceived airflow resistance in a nasal airway, may involve: contacting a treatment element of a treatment device with an outer surface of the nose; applying energy to at least one of a subdermal layer or a dermal layer of tissue in the nose, using the treatment element, wherein the tissue is located at least partially above the nasal valve; and cooling at least one of an epidermal layer or a superficial dermal layer of the nose, using the treatment device. In some embodiments, the applied energy comprises thermal energy, and applying the energy causes at least some of the tissue to tighten. In some embodiments, the method may also involve applying a substance to the outer surface of the nose before applying the energy to enhance at least one of the application of the energy or the cooling epidermal layer or the superficial dermal layer.

In another aspect, a device for treating a patient's nasal airway by modifying at least one property of at least one tissue of or near a nasal valve of the airway, without using a surgical incision or an implant, to decrease airflow resistance or perceived airflow resistance in a nasal airway, may include: an energy delivery member sized to be inserted into a nose and configured to deliver energy to tissues within the nose to modify the at least one property of the at least one tissue; a shaft extending from the energy delivery member; and a handle attached to the shaft at an opposite end from the energy delivery member, wherein the handle includes a housing to hold a power source for providing energy to the energy delivery member.

In some embodiments, the energy delivery member may have a contact surface with convex shape configured to at least temporarily create a concavity in nasal tissue. In some embodiments, the energy delivery member may have a contact surface with flat shape. In some embodiments, the energy delivery member may include multiple protruding electrodes configured to at least temporarily deform nasal tissue. In some embodiments, the protruding electrodes may include two rows of electrodes, where the energy delivery member comprises a bipolar radio frequency delivery member, and where radio frequency energy travels from one row of electrodes to the other row of electrodes.

In some embodiments, the housing of the handle is configured to hold at least one battery. Optionally, some embodiments may also include at least one sensor configured to sense at least one of temperature or impedance in nasal tissue. In some embodiments, the sensor may be attached to the device on or near the energy delivery member. Some embodiments may further include a tissue cooling member attached to the device at or near the energy delivery member.

These and other aspects and embodiments will be described in further detail below, in reference to the attached drawing figures.

BRIEF DESCRIPTION OF DRAWINGS

Certain preferred embodiments and modifications thereof will become apparent to those skilled in the art from the detailed description below having reference to the figures that follow.

FIG. **1** depicts an illustration of bone and cartilage structures of a human nose.

FIG. **2**A illustrates a cross-sectional view, illustrating tissues and structures of a human nose.

FIG. **2**B shows a detailed cross-sectional view, illustrating a detailed section of the structures of FIG. **2**A.

FIG. **2**C illustrates a view of the nostrils, illustrating tissues and structures of a human nose.

FIG. **3** depicts a schematic illustration of a nasal valve re-shaping treatment device.

FIG. **4**A is a perspective illustration of an embodiment of a treatment element shape.

FIG. **4**B depicts a perspective illustration of another embodiment of a treatment element shape.

FIG. **4**C shows a perspective illustration of another embodiment of a treatment element shape.

FIG. **4**D depicts a cross-sectional view of a treatment device, comprising a plurality of microneedles puncturing tissue in order to apply treatment at a desired tissue depth.

FIG. **5**A illustrates one embodiment of a clamp-type nasal valve treatment device.

FIG. **5**B illustrates another embodiment of a clamp-type nasal valve treatment device.

FIG. **6** depicts a partially-transparent perspective view, showing a stent implanted in a nose.

FIG. **7** depicts a perspective view, illustrating an energy delivery balloon being inserted into a nose.

FIGS. **8**A-**8**J depict embodiments of various electrode arrangements for applying energy to the nasal valve area.

FIGS. **9**A and **9**B illustrate embodiments of devices for applying energy to the nasal valve area using a monopolar electrode.

FIGS. **10**A and **10**B illustrate an embodiment of a device for applying energy to the nasal valve area using a monopolar electrode and an external mold.

FIGS. **11**A and **11**B illustrate embodiments of devices for applying energy to the nasal valve area using electrode(s) and a counter-traction element.

FIGS. **12**A and **12**B illustrate embodiments of devices for applying energy to the nasal valve area configured to be inserted into both nostrils simultaneously.

FIGS. **13**A-**13**E illustrate embodiments of devices for applying energy to the nasal valve area configured to be inserted into both nostrils simultaneously, having a mold or counter-traction element for engaging the nose externally.

FIGS. **14**A and **14**B illustrate embodiments of devices for applying energy to the nasal valve area configured to be inserted into both nostrils simultaneously, having separate external molds.

FIGS. **15**A-**15**C illustrate embodiments of devices for applying energy to the nasal valve area configured to be inserted into both nostrils simultaneously, having separate counter-traction elements.

FIG. **16** shows an embodiment of a system comprising a device for applying energy to the nasal valve area with an external electrode and a separate internal mold.

FIGS. **17**A and **17**B illustrate an embodiment of a device for applying energy to the nasal valve area comprising an external electrode and an internal mold.

FIG. **18** shows an embodiment of a device for applying energy to the nasal valve area comprising an array of non-penetrating electrodes.

FIGS. **19**A and **19**B illustrate an embodiment of a device for applying energy to the nasal valve area configured for use in only one nostril.

FIGS. **20**A and **20**B illustrate an embodiment of a device for applying energy to the nasal valve area configured for use in either nostril.

FIGS. **21**A and **21**B illustrate an embodiment of a device for applying energy to the nasal valve area having a symmetrical shape.

FIGS. **22**A-**22**G illustrate an embodiment of a device for applying energy to the nasal valve area using a monopolar electrode.

FIGS. **23**A-**23**G illustrate an embodiment of a device for applying energy to the nasal valve area using an array of needle electrodes.

FIG. **24**A depicts a cross-section of tissue at the nasal valve.

FIG. **24**B depicts heat effects of RF treatment of tissue at the nasal valve.

FIGS. **25**A and **25**B illustrate embodiments of devices for applying energy to the nasal valve area incorporating cooling systems.

FIG. **26** shows an embodiment of a device for applying energy to the nasal valve area incorporating a heat pipe.

FIG. **27** depicts an embodiment of a device for applying energy to the nasal valve area incorporating heat pipes.

FIGS. **28**A-**28**E depict embodiments of differential cooling mechanisms.

FIG. **29** shows an embodiment of a system comprising a device for applying energy to the nasal valve area with electrode needles and a separate cooling mechanism.

FIGS. **30**A-**30**D shows an embodiment of a method for applying energy to the nasal valve area using a device for applying energy to the nasal valve area.

FIGS. **31**A and **31**B are perspective and side, cross-sectional views, respectively, of a device for applying energy to the nasal valve area, including an internal power source, according to one embodiment.

FIGS. **32**A and **32**B are a cross-sectional side view of facial skin and a front view of a face of a patient, respectively, illustrating use of various embodiments of sensors that may be part of a system for applying energy to the nasal valve area, according to one embodiment.

FIGS. **33**A and **33**B are a bottom view of a distal end of a treatment device and a cross-sectional view of a nasal passage, respectively, illustrating wings of the treatment device that may be used to help guide the distal end to a desired location in the nasal passage.

FIGS. **34**A-**34**C are top views of various alternative embodiments of distal ends of treatment devices having different shapes for addressing differently shaped tissues.

FIG. **35** is a top view of a treatment device and a cross-sectional view of a portion of a nose, in which the treatment device includes an expandable member, according to one embodiment.

FIG. **36** is a diagrammatic representation of an internal nasal valve, illustrating areas for treatment, according to various embodiments.

DETAILED DESCRIPTION

The following disclosure provides embodiments of systems and methods for improving breathing by decreasing airflow resistance or perceived airflow resistance at or near a site of an internal or external nasal valve. Such embodiments may include methods and devices for reshaping, remodeling, strengthening, or changing the properties of the tissues of the nose, including, but not limited to the skin, muscle, mucosa, submucosa, and cartilage in the area of the nasal valves.

While, in some instances, nasal dysfunction can lead to poor airflow, nasal breathing can also be improved in people with normal breathing and/or normal nasal anatomy by decreasing nasal airflow resistance in the nasal valve and associated nasal anatomy. Remodeling or changing the structure of the nasal valve can improve nasal airflow in people with inadequate nasal airflow resulting from causes other than nasal valve dysfunction, such as deviated septum, enlarged turbinates, mucosal swelling, and/or mucus overproduction. The methods and devices described above are generally invasive methods or unsightly devices that a person with normal breathing and/or anatomy may not necessarily be inclined to use or undergo. Thus, there remains an unmet need in the art for non-invasive and minimally invasive methods and devices to decrease nasal airflow resistance or perceived nasal airflow resistance and/or to improve nasal airflow or perceived nasal airflow and the resulting symptoms or sequellae of poor nasal airflow, including but not limited to snoring, sleep disordered breathing, perceived nasal congestion and poor quality of life through the change of structures within the nose that form the passageways for airflow. Methods and devices described herein may be used to treat nasal airways without the need for more invasive procedures (e.g., ablation, surgery).

Nasal breathing can be improved in people with normal breathing and/or normal nasal anatomy by decreasing nasal airflow resistance or perceived nasal airflow resistance in the nasal valve and associated nasal anatomy. Restructuring the shape, conformation, angle, strength, and cross sectional area of the nasal valve may improve nasal airflow. Changing the nasal valve can be performed alone or together with other procedures (e.g., surgical procedures), such as those described above. Such methods and devices can lead to improved nasal airflow, increased volume of nasal airflow in patients with normal or reduced nasal airflow.

The internal nasal valve area is the narrowest portion of the nasal passage and thus functions as the primary regulator of airflow and resistance. The cross-sectional area of the internal nasal valve area is normally about 55-83 mm.sup.2. As described by the Poiseuille law, airflow through the nose is proportional to the fourth power of the radius of the narrowest portion of the nasal passageway. Thus, changes as small as 1 mm in the size of the nasal valve have an exponential effect on airflow and resistance through the nasal cavity and the entire respiratory system.

FIGS. **1** and **2**A-C illustrate anatomical elements of a human nose. The lower lateral cartilage (LLC) includes an external component referred to as the lateral crus and an internal component referred to as the medial crus. The medial crus and septal nasal cartilage create a nasal septum that separates the left and right nostrils. Upper lateral cartilage lies between the lower lateral cartilages and the nasal bone. The left ULC is separated from the right ULC by the septal cartilage extending down the bridge of the nose. The opposing edges of the LLC and ULC may move relative to one another. Disposed between the opposing edges is an accessory nasal cartilage. The septal nasal cartilage and the ULC form an angle (THETA.) called the nasal valve angle.

FIG. **2**B illustrates a detailed cross-section of a segment of nose tissue in the area of the intersection of the ULC and the LLC. As shown in FIG. **2**B, the detailed view of FIG. **2**A, both inner and outer surfaces of the nasal cartilage are covered with soft tissue including mucosa, sub-mucosa and skin.

FIG. **2**C illustrates a view of the nose as seen from the nostrils. FIG. **2**C depicts the nasal valve **1** shown between the septum **2** and the upper lateral cartilage **3**. FIG. **2**C also depicts the position of the turbinate **4**.

The internal nasal valve area of the nasal airway passage can be visualized prior to and/or during any treatment by any suitable method, including but not limited to direct visualization, endoscopic visualization, visualization by the use of a speculum, transillumination, ultrasound, MRI, x-ray or any other method. In some embodiments, treatments of the nasal valve area as described herein may be performed in conjunction with or following another procedure (e.g., a surgical procedure such as surgically repairing a deviated septum). In such embodiments, the nasal valve area may be visualized and accessed during surgery. In some embodiments, it may be desirable to visualize the internal nasal valve with minimum disturbance, so as to avoid incorrect assessments due to altering the shape of the nasal valve during visualization. In some embodiments, visualization elements may be incorporated into or combined with treatment devices configured for treating internal and/or external nasal valves.

Airflow through the nasal passage can be measured prior to and/or during any treatment by any suitable method, including, but not limited to, a nasal cannula connected to a pressure measurement system, rhinomanometry, and rhinohygrometer. Nasal airflow and resistance can also be evaluated by subjective evaluation before and after a manipulation to increase the cross-sectional area of the nasal passage, such as the Cottle maneuver. In some embodiments, it may be desirable to measure nasal airflow and/or resistance prior to, during and/or after a procedure.

The internal nasal valve area of the nasal airway passage can be accessed through the nares. In some embodiments, one or more devices may be used to pull the tip of the nose caudally and increase the diameter of the nares in order to further facilitate access to the internal nasal valve for treatment. Such devices may include speculum type devices and retractors. In other embodiments, access to the internal nasal valve may also be achieved endoscopically via the nares, or via the mouth and throat. In some embodiments, visualization devices may be incorporated or combined with treatment devices for treating internal and/or external nasal valves. These and any other access and/or visualization devices may be used with any of the methods and devices below.

During inhalation, airflow through the nostrils creates an inward pressure at the junction between the upper and lower cartilages. This pressure may be expressed as a function of nasal resistance which may be estimated as 10 centimeters of water per one liter per second in congested patients (see "The Four Components of the Nasal Valve" by Cole, published in the American Journal of Rhinology, pages 107-110, 2003). In response to these low pressures relative to the environment outside the nose, a normal, weakened and/or structurally inadequate nasal valve may move inwardly with the junction between the upper and lower cartilages acting as a hinge point for the inward deflection. Furthermore, a small increase in area through which air flows can greatly decrease the pressure differential in these structures resulting in less inward movement of the internal nasal valve structures. Increasing the cross sectional area of the nasal valve area thus has the beneficial effects of decreasing nasal airflow resistance and decreasing the amount and likelihood of inward movement of the nasal valve structures during inspiration.

Some embodiments below provide apparatus and methods for increasing the area of the opening at the nasal valve and/or treating nasal valve insufficiency by modifying the structure and/or structural properties of tissues at or adjacent to the internal and/or external nasal valve. Other embodiments below provide apparatus and methods for treating nasal valve insufficiency and/or increasing the area of the opening at nasal valve by re-shaping structures within and/or adjacent to an internal and/or external nasal valve to achieve a more optimum shape and minimize or remove airflow obstructions. Still other embodiments combine the two approaches of re-shaping and modifying tissue and structures of and adjacent to the internal and/or external nasal valves. Still other embodiments provide apparatus and methods for increasing the area of the opening at the nasal valve and treating nasal obstruction resulting from causes other than nasal valve restriction or insufficiency by improving the structure or function of the nasal valve tissue to increase airflow. Still other embodiments below provide apparatus and methods for decreasing airflow resistance in a structurally normal nasal valve and/or increasing the area of the opening at nasal valve by re-shaping structures within and/or adjacent to an internal and/or external nasal valve to achieve a more optimum shape and minimize or remove airflow obstructions. For example, patients having a normal nasal valve anatomy may still benefit from the devices and treatments described herein, as improvement in the nasal valve structure and/or increasing the area of the opening at the nasal valve may improve breathing problems caused by

other conditions. Still other embodiments provide for structural changes in the nasal cavity and airway that improve the relative positions of the structures of the nasal cavity to improve nasal breathing.

In some embodiments, airflow restrictions to the internal nasal valve may be the result of a smaller-than-optimal internal nasal valve angle, shown as .theta. in FIG. **2**. An internal nasal valve angle (i.e. the angle formed between the caudal border of the ULC and the nasal septum) of less than the normally optimal range of between about 10 degrees and about 15 degrees can result in airflow restrictions. Thus, in some embodiments, treatments may be designed to re-shape structures at or adjacent to the internal nasal valve in order to increase the internal nasal valve angle sufficiently that after such treatments, the nasal valve angle falls within the optimal range of about 10-15 degrees. In some embodiments, the internal valve angle may also be increased to be greater than 15 degrees.

In some embodiments, airflow restrictions to the internal nasal valve may be the result of a smaller-than-optimal area of the internal nasal valve. An internal nasal valve with a less than optimal area can result in airflow restrictions. Thus, in some embodiments, treatments may be designed to re-shape structures at or adjacent to the internal nasal valve in order to increase the internal nasal valve angle sufficiently that after such treatments, the area of the nasal valve falls within an optimal range. In some embodiments, increasing the area of the opening at the nasal valve without increasing the angle of the nasal valve may improve airflow. In some embodiments, increasing the angle of the nasal valve without increasing the area of the opening at the nasal valve may improve airflow. In some embodiments, both the opening at the area of the nasal valve and the angle of the nasal valve may be increased to improve airflow.

In some embodiments, nasal airflow can be increased in the presence of normal nasal valve anatomy and/or normal or enlarged nasal valve angle or area.

With reference to FIG. **2**A, in some embodiments, the internal valve angle .theta. or area may be increased by mechanically pressing laterally outwards against the internal lateral nasal wall. In some embodiments, this outward pressing may be performed by an inflatable balloon (such as those discussed below with reference to FIGS. **4**A-**4**B) which may be positioned between the upper portion of the nasal septum **20** and the outer lateral wall **22** and then inflated, pressing against the lateral nasal wall until the nasal valve angle reaches a desired size. Similarly, other mechanical devices such as spreaders or retractors (such as those discussed below with reference to FIGS. **5**A & **5**B) or molds may be used. In alternative embodiments, short-term removable implants may be used to re-shape the nasal valve. Some examples of short-term implants may include stents, molds or plugs. In further alternative embodiments, external re-shaping elements, such as adhesive strips or face masks may be used to modify the shape of a nasal valve. In some embodiments, energy application or other treatments as described below may be applied to substantially fix the re-shaped tissue in a desired conformational shape before, during or after applying a mechanical re-shaping force (e.g., with the balloon, mechanical devices, molds, short-term implants, or external re-shaping elements described above or any of the mechanical devices described below).

In another embodiment, a re-shaping device may be used to expand the diameter of the nasal passage at the site of the internal or external nasal valve. The expansion device can be a balloon, user controlled mechanical device, self expanding mechanical device, fixed shape device or any combination thereof. The expansion can increase the diameter over the normal range in order for the diameter to remain expanded after removal of the device and healing of the tissue.

In some embodiments, a re-shaping device may be used to conformationally change the structure of the internal or external nasal valve anatomy to allow greater airflow without necessarily expanding the diameter of the nasal passage.

In some embodiments, a re-shaping or remodeling device can be used to conformationally change the structure of areas of the internal nasal valve other than the nasal valve that causes the cross sectional or three dimensional structure of the nasal airway to assume a shape less restrictive to airflow without widening the nasal valve angle.

In some embodiments, the tissue of the internal and/or external nasal valve and/or surrounding tissues may be strengthened or otherwise modified to resist a conformational change in response to the negative pressure of inspiration. In some embodiments, this strengthening may be performed by applying treatments selected to change mechanical or structural properties of the treated tissue. In some embodiments, such treatments may include the application of energy to selected regions of nasal valve and/or surrounding tissues.

In some embodiments, energy may be applied in the form of heat, radiofrequency (RF), laser, light, ultrasound (e.g. high intensity focused ultrasound), microwave energy, electromechanical, mechanical force, cooling, alternating or direct electrical current (DC current), chemical, electrochemical, or others. In alternative embodiments, the nasal valve and/or surrounding tissues may be strengthened through the application of cryogenic therapy, or through the injection or application of bulking agents, glues, polymers, collagen and/or other allogenic or autogenic tissues, or growth agents.

Any one or more of the above energy-application mechanisms may also be used to re-shape, remodel, or change mechanical or physiologic properties of structures of a nasal valve or surrounding tissues. For example, in some embodiments, energy may be applied to a targeted region of tissue adjacent a nasal valve such that the tissue modification results in a tightening, shrinking or enlarging of such targeted tissues resulting in a change of shape. In some such embodiments, re-shaping of a nasal valve section may be achieved by applying energy without necessarily applying a mechanical re-shaping force. For example energy can be used to selectively shrink tissue in specific locations of the nasal airway that will lead to a controlled conformational change.

In alternative embodiments, strengthening and/or conformation change (i.e., re-shaping) of nasal valve tissue to reduce negative pressure during inspiration may include modification of tissue growth and/or the healing and fibrogenic process. For example, in some embodiments energy may be applied to a targeted tissue in the region of the internal nasal valve in such a way that the healing process causes a change to the shape of the nasal valve and/or a change in the structural properties of the tissue. In some embodiments, such targeted energy application and subsequent healing may be further controlled through the use of temporary implants or re-shaping devices (e.g. internal stents or molds, or external adhesive strips).

In some embodiments, energy may be delivered into the cartilage tissue to cause a conformational change and/or a change in the physical properties of the cartilage. Energy delivery may be accomplished by transferring the energy through the tissue covering the cartilage such as the epithelium, mucosa, sub-mucosa, muscle, ligaments, tendon and/

or skin. In some embodiments, energy may also be delivered to the cartilage using needles, probes or microneedles that pass through the epithelium, mucosa, submucosa, muscle, ligaments, tendon and/or skin (as illustrated for example in FIG. **4**D).

In some embodiments, energy may be delivered into the submucosal tissue to cause a conformational change and/or a change in the physical properties of the submucosal tissue. Energy delivery may be accomplished by transferring the energy through the tissue covering the submucosa such as the epithelium, mucosa, muscle, ligaments, cartilage, tendon and/or skin. In some embodiments, energy may also be delivered to the submucosa using needles, probes, microneedles, micro blades, or other non-round needles that pass through the epithelium, mucosa, muscle, ligaments, tendon and/or skin.

FIG. **3** illustrates an embodiment of a nasal valve treatment device **30**. The device **30** comprises a treatment element **32** which may be configured to be placed inside the nasal cavity, nasal passage, and/or nasal airway to deliver the desired treatment. In some embodiments, the device **30** may further comprise a handle section **34** which may be sized and configured for easy handheld operation by a clinician. In some embodiments, a display **36** may be provided for displaying information to a clinician during treatment.

In some embodiments, the information provided on the display **36** may include treatment delivery information (e.g. quantitative information describing the energy being delivered to the treatment element) and/or feedback information from sensors within the device and/or within the treatment element. In some embodiments, the display may provide information on physician selected parameters of treatment, including time, power level, temperature, electric impedance, electric current, depth of treatment and/or other selectable parameters.

In some embodiments, the handle section **34** may also comprise input controls **38**, such as buttons, knobs, dials, touchpad, joystick, etc. In some embodiments, controls may be incorporated into the display, such as by the use of a touch screen. In further embodiments, controls may be located on an auxiliary device which may be configured to communicate with the treatment device **30** via analog or digital signals sent over a cable **40** or wirelessly, such as via bluetooth, WiFi (or other 802.11 standard wireless protocol), infrared or any other wired or wireless communication method.

In some embodiments the treatment system may comprise an electronic control system **42** configured to control the timing, location, intensity and/or other properties and characteristics of energy or other treatment applied to targeted regions of a nasal passageway. In some embodiments, a control system **42** may be integrally incorporated into the handle section **34**. Alternatively, the control system **42** may be located in an external device which may be configured to communicate with electronics within the handle section **34**. A control system may include a closed-loop control system having any number of sensors, such as thermocouples, electric resistance or impedance sensors, ultrasound transducers, or any other sensors configured to detect treatment variables or other control parameters.

The treatment system may also comprise a power supply **44**. In some embodiments, a power supply may be integrally incorporated within the handle section **34**. In alternative embodiments, a power supply **44** may be external to the handle section **34**. An external power supply **44** may be configured to deliver power to the handle section **34** and/or the treatment element **32** by a cable or other suitable connection. In some embodiments, a power supply **44** may include a battery or other electrical energy storage or energy generation device. In other embodiments, a power supply may be configured to draw electrical power from a standard wall outlet. In some embodiments, a power supply **44** may also include a system configured for driving a specific energy delivery technology in the treatment element **32**. For example, the power supply **44** may be configured to deliver a radio frequency alternating current signal to an RF energy delivery element. Alternatively, the power supply may be configured to deliver a signal suitable for delivering ultrasound or microwave energy via suitable transducers. In further alternative embodiments, the power supply **44** may be configured to deliver a high-temperature or low-temperature fluid (e.g. air, water, steam, saline, or other gas or liquid) to the treatment element **32** by way of a fluid conduit.

In some embodiments, the treatment element **32** may have a substantially rigid or minimally elastic shape sized and shaped such that it substantially conforms to an ideal shape and size of a patient's nasal passageway, including the internal and external nasal valves. In some embodiments, the treatment element **32** may have a curved shape, either concave or convex with respect to the interior of the lateral wall of the nasal passage. In some embodiments, the shape of a fixed-shape treatment element may be substantially in a shape to be imparted to the cartilage or other structures of the internal or external nasal valve area.

In some embodiments, as shown for example in FIG. **3**, the treatment element **32** may comprise a substantially cylindrical central portion with a semi-spherical or semi-ellipsoid or another shaped end-cap section at proximal and/or distal ends of the treatment element **32**. In alternative embodiments, the treatment element may comprise a substantially ellipsoid shape as shown, for example in FIGS. **4**A-**4**D. In some embodiments, an ellipsoid balloon as shown in FIG. **4**A may have an asymmetrical shape. In alternative embodiments, the treatment element **32** may have an asymmetrical "egg-shape" with a large-diameter proximal end and a smaller-diameter distal end. In some embodiments, the element **32** can be shaped so as to impart a shape to the tissue treated that is conducive to optimal nasal airflow. Any suitable solid or expandable medical balloon material and construction available to the skilled artisan may be used.

FIG. **4**B illustrates an embodiment of a treatment element configured to deliver energy to an interior of a nasal valve. In some embodiments, the treatment element of FIG. **4**B also includes an expandable balloon.

FIG. **4**C illustrates an embodiment of a bifurcated treatment element **70** having a pair of semi-ellipsoid elements **72**, **74** sized and configured to be inserted into the nose with one element **72**, **74** on either side of the septum. The elements may each have a medial surface **75***a* & **75***b* which may be substantially flat, curved or otherwise shaped and configured to lie adjacent to (and possibly in contact with) the nasal septum. In some embodiments, the elements **72**, **74** may include expandable balloons with independent inflation lumens **76**, **78**. In alternative embodiments, the elements **72**, **74** have substantially fixed non-expandable shapes. In still further embodiments, the elements **72**, **74** may include substantially self-expandable sections. In some embodiments, the bifurcated treatment element halves **72**, **74** may also carry energy delivery structures as described elsewhere herein. In some embodiments, the shape of the elements **72**, **74** may be modified by the operator to impart an optimal configuration to the treated tissue. The shape modification of elements **72**, **74** can be accomplished pre-procedure or

during the procedure and can be either fixed after modification or capable of continuous modification.

In some embodiments, a nasal valve treatment system may also comprise a re-shaping device configured to mechanically alter a shape of soft tissue and/or cartilage in a region of a nasal valve in order to impart a desired shape and mechanical properties to the tissue of the walls of the nasal airway. In some embodiments the re-shaping device may be configured to re-shape the internal and/or external nasal valve into a shape that improves the patency of one or both nasal valve sections at rest and during inspiration and/or expiration. In some embodiments, the reshaping device may comprise balloons, stents, mechanical devices, molds, external nasal strips, spreader forceps or any other suitable structure. In some embodiments, a re-shaping device may be integrally formed with the treatment element **32**. In alternative embodiments, a re-shaping device may be provided as a separate device which may be used independently of the treatment element **32**. As described in more detail below, such re-shaping may be performed before, during or after treatment of the nose tissue with energy, injectable compositions or cryo-therapy.

With reference to FIGS. **4**A-**4**C, some embodiments of treatment elements **32** may comprise one or more inflatable or expandable sections configured to expand from a collapsed configuration for insertion into the nasal passageway, to an expanded configuration in which some portion of the treatment element **32** contacts and engages an internal surface of a nasal passageway. In some embodiments, an expandable treatment element may comprise an inflation lumen configured to facilitate injection of an inflation medium into an expandable portion of the treatment element. In alternative embodiments, an expandable treatment element may comprise one or more segments comprising a shape-memory alloy material which may be configured to expand to a desired size and shape in response to a change of temperature past a transition temperature. In some embodiments, such a temperature change may be brought about by activating an energy-delivery (or removal) element in the treatment element **32**.

In some embodiments, the treatment element **32** may expand with various locations on the element expanding to different configurations or not expanding at all to achieve a desired shape of the treatment element. In some embodiments, such expandable treatment elements or sections may be elastic, inelastic, or pre-shaped. In some embodiments, expandable treatment elements or sections there of may be made from shape-memory metals such as nickel-cobalt or nickel-titanium, shape memory polymers, biodegradable polymers or other metals or polymers. Expandable balloon elements may be made of any elastic or inelastic expandable balloon material.

In alternative embodiments, the treatment element **32** can act to change the properties of the internal soft tissue of the nasal airway in conjunction with an external treatment device of fixed or variable shape to provide additional force to change the shape of the internal and/or external nasal valve. In some embodiments, an external mold element can be combined with an internal element.

FIGS. **5**A and **5**B illustrate re-shaping treatment devices **80** and **90**, respectively. The treatment devices **80** and **90** are structured as clamp devices configured to engage a targeted section of the nasal valve with either a clamping force or a spreading force. In some embodiments, the treatment devices of FIGS. **5**A and **5**B may include energy delivery elements (of any type described herein) which may be powered by a fluid lumen or cable **86**.

The treatment device of FIG. **5**A includes an outer clamp member **82** and an inner clamp member **84** joined at a hinge point **85**. In some embodiments, the outer clamp member **82** may include an outwardly-bent section **86** sized and configured to extend around the bulk of a patient's nose when the inner clamp member may be positioned inside the patient's nose. The inner and outer tissue-engaging tips at the distal ends of the inner and outer clamp members may be configured to impart a desired shape to the internal and/or external nasal valve. In some embodiments, the tissue-engaging tips may be removable to allow for sterilization and/or to allow for tips of a wide range of shapes and sizes to be used with a single clamp handle.

The treatment device of FIG. **5**B includes an outer clamp member **92** and an inner clamp member **94** joined at a hinge point **95**. The inner and outer tissue-engaging tips at the distal ends of the inner and outer clamp members may be configured to impart a desired shape to the internal and/or external nasal valve. In the illustrated embodiment, the outer clamp member **92** includes a concave inner surface, and the inner clamp member includes a mating convex inner surface. The shape and dimensions of the mating surfaces may be designed to impart a desired shape to the structures of a patient's nose. In some embodiments, the shape of the mating surfaces may be modified by the operator to impart an optimal configuration to the treated tissue. The shape modification of the mating surfaces can be accomplished pre-procedure or during the procedure and can be either fixed after modification or capable of continuous modification.

In some embodiments, the tissue-engaging tips may be removable to allow for sterilization and/or to allow for tips of a wide range of shapes and sizes to be used with a single clamp handle.

In alternative embodiments, the devices of FIGS. **5**A and **5**B may be used as spreader devices by placing both clamp tips in one nasal valve and separating the handles, thereby separating the distal tips. In alternative embodiments, the handles may be configured to expand in response to a squeezing force. The shapes of the distal tips may be designed to impart a desired shape when used as a spreading device.

The re-shaping elements of FIGS. **3**-**5**B are generally configured to be used once and removed from a patient's nose once a treatment is delivered. In some embodiments, treatments may further involve placing longer term treatment elements, such as stents, molds, external strips, etc. for a period of time after treatment. An example of such a stent placed within a patient's nose after treatment is shown in FIG. **6**. In some embodiments, the stent may be configured to be removed after a therapeutically effective period of time following the treatment. In some embodiments, such a therapeutically effective period of time may be on the order of days, weeks or more.

In some embodiments, the treatment element **32** may be configured to deliver heat energy to the nasal valve. In such embodiments, the treatment element may comprise any suitable heating element available to the skilled artisan. For example, the treatment element **32** may comprise electrical resistance heating elements. In alternative embodiments, the heating element may comprise conduits for delivering high-temperature fluids (e.g. hot water or steam) onto the nasal tissue. In some embodiments, a high-temperature fluid heating element may comprise flow channels which place high-temperature fluids into conductive contact with nasal tissues (e.g. through a membrane wall) without injecting such fluids into the patient's nose. In further embodiments, any other

suitable heating element may be provided. In further embodiments, the treatment element **32** may comprise elements for delivering energy in other forms such as light, laser, RF, microwave, cryogenic cooling, DC current and/or ultrasound in addition to or in place of heating elements.

U.S. Pat. No. 6,551,310 describes embodiments of endoscopic treatment devices configured to ablate tissue at a controlled depth from within a body lumen by applying radio frequency spectrum energy, non-ionizing ultraviolet radiation, warm fluid or microwave radiation. U.S. Pat. No. 6,451,013 and related applications referenced therein describe devices for ablating tissue at a targeted depth from within a body lumen. Embodiments of laser-treatment elements are described for example in U.S. Pat. No. 4,887,605, among others. U.S. Pat. No. 6,589,235 teaches methods and device for cartilage reshaping by radiofrequency heating. U.S. Pat. No. 7,416,550 also teaches methods and devices for controlling and monitoring shape change in tissues, such as cartilage. The devices described in these and other patents and publications available to the skilled artisan may be adapted for use in treating portions of a nasal valve or adjacent tissue as described herein. U.S. Pat. Nos. 7,416,550, 6,589,235, 6,551,310, 6,451,013 and 4,887,605 are hereby incorporated by reference in their entireties.

In alternative embodiments, similar effects can be achieved through the use of energy removal devices, such as cryogenic therapies configured to transfer heat energy out of selected tissues, thereby lowering the temperature of targeted tissues until a desired level of tissue modification is achieved. Examples of suitable cryogenic therapy delivery elements are shown and described for example in U.S. Pat. Nos. 6,383,181 and 5,846,235, the entirety of each of which is hereby incorporated by reference.

In some embodiments, the treatment element **32** may be configured to deliver energy (e.g. heat, RF, ultrasound, microwave) or cryo-therapy uniformly over an entire outer surface of the treatment element **32**, thereby treating all nasal tissues in contact with the treatment element **32**. Alternatively, the treatment element **32** may be configured to deliver energy at only selective locations on the outer surface of the treatment element **32** in order to treat selected regions of nasal tissues. In such embodiments, the treatment element **32** may be configured so that energy being delivered to selected regions of the treatment element can be individually controlled. In some embodiments, portions of the treatment element **32** are inert and do not deliver energy to the tissue. In further alternative embodiments, the treatment element **32** may be configured with energy-delivery (or removal) elements distributed over an entire outer surface of the treatment element **32**. The control system **42** may be configured to engage such distributed elements individually or in selected groups so as to treat only targeted areas of the nasal passageway.

In some embodiments, the treatment element **32** may be a balloon with energy delivery elements positioned at locations where energy transfer is sufficient or optimal to effect change in breathing. Such a balloon may be configured to deliver energy while the balloon is in an inflated state, thereby providing a dual effect of repositioning tissue and delivering energy to effect a change the nasal valve. In other embodiments, a balloon may also deliver heat by circulating a fluid of elevated temperature though the balloon during treatment. The balloon can also delivery cryotherapy (e.g. by circulating a low-temperature liquid such as liquid nitrogen) while it is enlarged to increase the nasal valve diameter or otherwise alter the shape of a nasal valve. FIG. **7** illustrates an example of an energy-delivery balloon being inserted into a patient's nose for treatment. Several embodiments may be employed for delivering energy treatment over a desired target area. For example, in some embodiments, a laser treatment system may treat a large surface area by scanning a desired treatment pattern over an area to be treated. In the case of microwave or ultrasound, suitably configured transducers may be positioned adjacent to a target area and desired transducer elements may be activated under suitable depth focus and power controls to treat a desired tissue depth and region. In some embodiments, ultrasound and/or microwave treatment devices may also make use of lenses or other beam shaping of focusing devices or controls. In some embodiments, one or more electrical resistance heating elements may be positioned adjacent to a target region, and activated at a desired power level for a therapeutically effective duration. In some embodiments, such heating elements may be operated in a cyclical fashion to repeatedly heat and cool a target tissue. In other embodiments, RF electrodes may be positioned adjacent to and in contact with a targeted tissue region. The RF electrodes may then be activated at some frequency and power level therapeutically effective duration. In some embodiments, the depth of treatment may be controlled by controlling a spacing between electrodes. In alternative embodiments, RF electrodes may include needles which may puncture a nasal valve tissue to a desired depth (as shown for example in FIG. **4**D and in other embodiments below).

In some embodiments, the treatment element **32** and control system **42** may be configured to deliver treatment energy or cryotherapy to a selected tissue depth in order to target treatment at specific tissues. For example, in some embodiments, treatments may be targeted at tightening sections of the epithelium of the inner surface of the nasal valve. In other embodiments, treatments may be targeted at strengthening soft tissues underlying the epithelium. In further embodiments, treatments may be targeted at strengthening cartilage in the area of the upper lateral cartilage. In still further embodiments, treatments may be targeted at stimulating or modifying the tissue of muscles of the nose or face in order to dilate the nasal valve.

In some embodiments, the treatment element **32** and control system **42** may be configured to deliver treatment energy to create specific localized tissue damage or ablation, stimulating the body's healing response to create desired conformational or structural changes in the nasal valve tissue.

In some embodiments, the treatment element **32** and control system **42** may be configured to create specific localized tissue damage or ablation without the application of energy. For example the treatment element **32** may be configured to chemically cauterize tissue around a nasal valve by delivering a cauterizing agent (e.g., silver nitrate, trichloroacetic acid, cantharidin, etc.) to the tissue. The treatment element **32** may comprise apertures configured to permit the cauterizing agent pass through to the nose. In some embodiment, the treatment element **32** may aerosolize the cauterizing agent. Other delivery methods are also contemplated. The treatment element **32** may comprise a lumen through which the cauterizing agent passes. The lumen may be fluidly connected to a reservoir or container holding the cauterizing agent. The device may comprise an input control (e.g., a button or switch) configured to control the delivery of the cauterizing agent. In some embodiments, the treatment element **32** comprises an applicator that can be coated in a cauterizing agent (e.g., dipped in a reservoir of cauterizing agent, swabbed with cauterizing agent, etc.) and the coated treatment element applicator may be applied to

tissue to be treated. In some embodiments, the treatment element may be configured to apply cauterizing agent to the patient over a prolonged period of time (e.g., 30 seconds, 1 minute, 2 minutes, etc.). In some embodiment, the treatment element **32** comprises shields configured to protect tissue surrounding the tissue to be treated from coming into contact with the cauterizing agent. In some embodiments, a separate element is used to shield tissue surrounding the tissue to be treated from coming into contact with the cauterizing agent. While such treatments may be performed without the application of energy, in some embodiments, they are performed in conjunction with energy treatments.

In some embodiments, a treatment element may be configured to treat a patient's nasal valve by applying treatment (energy, cryotherapy, or other treatments) from a position outside the patient's nose. For example, in some embodiments, the devices of FIGS. **5**A and **5**B may be configured to apply energy from an element positioned outside a patient's nose, such as on the skin. In another embodiment, a device may be placed on the external surface of the nose that would pull skin to effect a change in the nasal airway. Treatment may then be applied to the internal or external nasal tissue to achieve a desired nasal valve function.

In some embodiments, the device is configured to position tissue to be re-shaped. In some embodiments, the device comprises features and mechanisms to pull, push or position the nasal tissue into a mold for re-shaping. For example, suction, counter traction, or compression between two parts of the device may be used.

In some embodiments, the treatment device comprises one, two, three, four, or more molds configured to re-shape tissue. The mold or re-shaping element may be fixed in size or may vary in size. The mold may also be fixed in shape or may vary in shape. For example, the size or shape of the element may be varied or adjusted to better conform to a nasal valve of a patient. Adjustability may be accomplished using a variety of means, including, for example, mechanically moving the mold by way of joints, arms, guidewires, balloons, screws, stents, and scissoring arms, among other means. The mold may be adjusted manually or automatically. The mold is configured to impart a shape to the tissues of the nasal valve area to improve airflow or perceived airflow. The mold is configured to act near the apex of the nasal valve angle, the point at which the upper lateral cartilage meets the cartilage of the nasal septum. It may be desirable to treat in an area near, but not at, the nasal valve so as to avoid post procedure scarring and/or adhesions. This may be accomplished by focusing treatment on the lateral part of the nasal valve angle.

In some embodiments, the mold or re-shaping element comprises a separate or integrated energy delivery or treatment element (e.g., an electrode such as those described below with respect to FIGS. **8**A-**8**J). The treatment element may be fixed or adjustable in size. For example, the treatment element may be adjusted to better conform to the nasal valve of a patient. In the case of a separate re-shaping element and treatment element, a distance between the two elements may either be fixed or adjustable. Adjustability may be accomplished using a variety of means, including, for example, mechanically moving the mold by way of joints, arms, guidewires, balloons, screws, stents, and scissoring arms, among other means.

In some embodiments, the mold or another part of the device is configured to deliver cooling (discussed in more detail below). In some embodiments, the mold or re-shaping element comprises a balloon configured to reshape and/or deform tissue. A balloon may also be configured to deliver energy such as heat using hot liquid or gas.

Examples of Various Electrode Arrangements

Described below are embodiments of various treatment devices and, more particularly, electrode arrangements that may be used for applying energy to the nasal valve area. These electrodes may, for example, deliver RF energy to preferentially shape the tissue to provide improved nasal breathing. In some embodiments, one or more electrodes may be used alone or in combination with a tissue shaping device or mold. In other embodiments, one or more electrodes may be integrally formed with a tissue shaping device or mold, so that the electrodes themselves create the shape for the tissue. In some embodiments, the energy delivery devices may utilize alternating current. In some embodiments, the energy delivery devices may utilize direct current. In certain such embodiments, the energy delivery device may comprise a configuration utilizing a grounding pad.

In some embodiments, the term "electrode" refers to any conductive or semi-conductive element that may be used to treat the tissue. This includes, but is not limited to metallic plates, needles, and various intermediate shapes such as dimpled plates, rods, domed plates, etc. Electrodes may also be configured to provide tissue deformation in addition to energy delivery. Unless specified otherwise, electrodes described can be monopolar (e.g., used in conjunction with a grounding pad) or bipolar (e.g., alternate polarities within the electrode body, used in conjunction with other tissue-applied electrodes).

In some embodiments, "mold", "tissue shaper", "re-shaping element" and the like refer to any electrode or non-electrode surface or structure used to shape, configure or deflect tissue during treatment.

In some embodiments, "counter-traction" refers to applying a force opposite the electrode's primary force on the tissue to increase stability, adjustability, or for creating a specific shape.

As shown in FIG. **8**A, in some embodiments, bipolar electrodes may be used to deliver energy, with one electrode **202** placed internally in the nasal valve, for example against the upper lateral cartilage, and one electrode **204** placed externally on the outside of the nose. This embodiment may advantageously provide direct current flow through the tissue with no physical trauma from needles (as shown in some embodiments below). As shown in FIG. **8**B, in some embodiments, bipolar electrodes may be used to deliver energy, with both electrodes **210**, **212** placed internally. An insulating spacer **214** may be placed between them. This embodiment may be simple and may advantageously minimize current flow through the skin layer. In some embodiments, bipolar electrodes **220**, **222** may be both placed externally and may be connected to a passive molding element **224** placed inside the nasal valve adjacent to tissue to be treated, as shown in FIG. **8**C. This embodiment may advantageously minimize the potential for mucosal damage. In some embodiments, electrodes placed internally may be shaped to function as a mold or may comprise an additional structure that may function as a mold.

In some embodiments, a monopolar electrode may be used to deliver energy. As shown in FIG. **8**D, the electrode **230** may be placed internally and may be connected to an external, remote grounding pad **232**. The grounding pad **232** may, for example, be placed on the abdomen of a patient or in other desired locations. This embodiment may advantageously be simple to manufacture and may minimize current flow through the skin. In some embodiments, a monopolar

electrode may be placed externally and may be connected to a molding element placed inside the nasal valve as well as a remote grounding pad. This embodiment may also advantageously be simple to manufacture, may minimize mucosal current flow, and may also be simple to position. In some embodiments, electrodes placed internally may be shaped to function as a mold or may comprise an additional structure that may function as a mold.

In some embodiments, monopolar transmucosal needles may be used to deliver energy. The needle electrodes **240** may be placed internally, as shown in FIG. **8**E penetrating through the mucosa to the cartilage, and a remote grounding pad **242** or element may be placed externally. In some embodiments, monopolar transmucosal needles may be used in conjunction with one or more molding elements which may be disposed on or around the needles. In some embodiments, monopolar transdermal needles may be used to deliver energy. In other embodiments (not shown), the needles may be placed external to the nose, and penetrate through to tissue to be treated. Needle configurations may advantageously target the cartilage tissue to be treated specifically. The monopolar transdermal needles may be used in conjunction with an internal molding device (not shown).

In some embodiments, bipolar transmucosal needles may be used to deliver energy to tissue to be treated. The needles may be placed internally, with an insulating spacer between them and may penetrate through the mucosa to the cartilage to be treated. In some embodiments, the bipolar transmucosal needles may be used in combination with one or more internal molding elements. The one or more molding elements may be placed on or near the needles. In some embodiments, bipolar transdermal needles may be used to deliver energy. In other embodiments, the transdermal needles may be placed externally and penetrate through to tissue to be treated. Needle configurations may advantageously target the cartilage tissue to be treated specifically. The transdermal bipolar needles may be utilized in conjunction with an internal molding element.

As shown in FIG. **8**F, in some embodiments, an array of electrodes comprising one, two, or many pairs of bipolar needles **252** are located on a treatment element configured to be placed into contact with the cartilage. An insulator **254** may be disposed between the bipolar needles **252**. An insulator may also be utilized on part of the needle's length to allow energy to be delivered only to certain tissue structures, such as cartilage. The electrodes may be placed either internally or transmucosally or they may be placed externally or transdermally. In the embodiment illustrated in FIG. **8**F, the insulator **254** may also function as a mold or molding element. In other embodiments (not shown), the array of electrodes is used in conjunction with a separate tissue re-shaping element.

FIG. **8**G illustrates another embodiment of a treatment element comprises one, two or many pairs of bipolar electrodes **260**. As opposed to FIG. **8**F, where the pairs of electrodes are arranged side-by-side, the embodiment of FIG. **8**G arranges the pairs of electrodes along the length of the treatment element. The electrodes of FIG. **8**G are also non-penetrating, in contrast to the needles of FIG. **8**F. The electrodes **260** may be placed against either the skin, externally, or the mucosa, internally as a means of delivering energy to target tissue such as cartilage.

In some embodiments of treatment devices comprising an array or multiple pairs of electrodes, each pair of electrodes (bipolar) or each electrode (monopolar) may have a separate, controlled electrical channel to allow for different regions of the treatment element to be activated separately. For example, the needles or needle pairs of FIG. **8**F may be individually controlled to produce an optimal treatment effect. For another example, the separate electrodes of FIGS. **8**B and **8**C may be individually controlled to produce an optimal treatment effect. Other examples are also contemplated. The channels may also comprise separate or integrated feedback. This may advantageously allow for more accurate temperature control and more precise targeting of tissue. Separate control may also allow energy to be focused and/or intensified on a desired region of the treatment element in cases where the anatomy of the nasal tissue/structures does not allow the entire electrode region of the treatment element to engage the tissue. In such embodiments, the nasal tissue that is in contact with the treatment element may receive sufficient energy to treat the tissue.

Combinations of the described electrode configurations may also be utilized to deliver energy to tissue to be treated (e.g., by being reshaped). For example, transmucosal needles **264** may be placed internally, penetrating through to the tissue to be treated, and an electrode **266** may be placed externally, as shown in FIG. **8**H. This embodiment may advantageously target the cartilage tissue specifically and be biased for mucosal preservation. For another example, transdermal needles **268** may be placed externally and an electrode **270** may be placed internally, as shown in FIG. **8**I. This embodiment may advantageously target the cartilage tissue specifically and be biased towards skin preservation. For another example bipolar needle electrodes **272**, **274** can be placed both transdermally or externally and transmucosally or internally, as shown in FIG. **8**J. This embodiment may advantageously target the cartilage tissue specifically. Some embodiments of treatment elements may include inert areas which do not delivery energy to the tissue. Other combinations of electrode configuration are also possible.

Examples of Treatment Devices Including Electrodes

Embodiments of treatment devices incorporating treatment elements such as the electrodes described above are illustrated in FIGS. **9**A-**21**B. The instrument designs described in these embodiments may be used in a device such as the device **30**, described above, and in the system of FIG. **3**. In some embodiments, the devices provide tissue re-shaping or molding in addition to energy delivery. Applying energy to the nasal valve may require properly positioning the electrode(s) at the nasal valve, deflecting or deforming the tissue into a more functional shape, and delivering or applying energy consistently prior to device removal. Embodiments described herein may advantageously provide adjustability, visualization of effect, ease of use, ease of manufacturability and component cost. Molding and reshaping of the tissues of the nasal valve may allow for non-surgical nasal breathing improvement without the use of implants.

FIG. **9**A depicts a device **300** comprising a single inter-nasal monopolar electrode **301** located at the end of a shaft **302**. The shaft is attached to a handle **303**. The electrode configuration may be similar to that described with respect to FIG. **8**D. FIG. **9**B depicts another device **304** comprising a single inter-nasal, monopolar electrode **305**. The electrode **305** is located at the distal end of a shaft **306**, which is attached to a handle **307**. The handle comprises a power button **308** that may be used to activate and deactivate the electrode. As stated above, the device **304** may either comprise a generator or be connected to a remote generator. The electrode **305** may be provided on an enlarged, distal end of the shaft **306**, and in the embodiment illustrated has

a convex shape configured to press against and create a concavity in the nasal valve cartilage.

FIG. **10**A depicts a side view of a device **310** comprising a single inter-nasal electrode **312** located at the end of a shaft **314**. The shaft is attached to a handle **316**. An external mold **318** is attached to the handle **316** and can be moved relative to the electrode shaft **314**. The external mold **318** has a curved shape with an inner concave surface that may be moved in order to press against an external surface of a patient's nose to compress tissue between the external mold **318** and the electrode **312**. FIG. **10**B provides a front view of the device **310**.

FIG. **11**A depicts a device **320** comprising a single inter-nasal electrode **322** attached to the end of a shaft **324**. The shaft **324** is attached to a handle **326**. An internal shaft **328** comprising a tissue-contacting surface is attached to the handle **326**. The internal shaft **328** can be moved relative to the electrode shaft **324** and may provide counter-traction and/or positioning. For example, when the electrode **322** is placed against a patient's upper lateral cartilage, the counter-traction element **328** may be pressed against the patient's nasal septum.

FIG. **11**B depicts a device **450** similar to device **320** of FIG. **11**A comprising an inter-nasal electrode **451** located at a distal end of a shaft **452** connected to a handle **454**. The device **450** further comprises a counter-traction element **456** connected to a handle **458**. Like the device **320** depicted in FIG. **11**A, the connection **460** between the two handles **454**, **458** is such that squeezing the two handles **454**, **458** together causes the electrode **451** and the counter-traction element **456** to move away from each other, spreading the tissue they are contacting.

FIG. **12**A depicts a device **330** comprising a single inter-nasal electrode **332** located at the end of a shaft **334**. The shaft **334** is attached to a handle **336**. The device **330** comprises another single inter-nasal electrode **338** attached to the end of a shaft **340**. The shaft **340** is attached to a handle **342**. The device comprises a connection **344** between the two handles **336**, **342** that allows simultaneous deformation and treatment of both nostrils.

FIG. **12**B depicts a device **470** similar to device **330** of FIG. **12**A comprising a first inter-nasal electrode **472** located at a distal end of a shaft **474** connected to a handle **476**. The device **470** comprises a second inter-nasal electrode **478** located at a distal end of a second shaft **480** connected to a second handle **482**. The connection **484** between the two handles **476**, **482** is such that squeezing the handles **476**, **482** together causes the electrodes **472**, **478** to move away from one another, spreading any tissue they may be in contact with. The device **470** comprises a ratcheting mechanism **475** between the two handles **476**, **482** that allows the relative positions of the electrodes **472**, **478** to be locked during treatment.

FIG. **13**A depicts a side view of a device **350** also used for treating two nostrils comprising an inter-nasal electrode **352** attached to the end of a shaft **354**. The shaft **354** is attached to a handle **356**. As seen in the front view provided in FIG. **13**B, the device **350** comprises a second inter-nasal electrode **358**. The second inter-nasal electrode **358** is attached to the end of a shaft which is attached to a handle. A connection between the two handles allows simultaneous deformation and treatment of the nostrils. An external mold **366** is attached to the handles. The mold **366** may be moved relative to the electrode shafts **354**, **360** and may provide counter-traction (e.g., against the bridge of the nose) and positioning.

FIGS. **13**C-E depicts a device **490** similar to the device **350** shown in FIG. **13**A and FIG. **13**B. FIGS. **13**C and **13**D depict side and top views of a device **490** comprising a handle **492**. The handle **492** bifurcates into a first shaft **494** with a first inter-nasal electrode **496** located at a distal end of the shaft **494** and a second shaft **498** with a second inter-nasal electrode **500** located at a distal end of the shaft **498**. The device **490** comprises a mold **502** configured to provide counter-traction or compression of the bridge of the nose. The mold **502** comprises a handle **504**. The connection **506** between the handles **492**, **504** is such that squeezing the two handles **492**, **504** causes the electrodes **496**, **600** and the mold **502** to be compressed together. FIG. **13**E depicts the device **490** being used on a patient. The arrows indicate the directions in which the handles **492**, **504** are configured to be squeezed.

FIG. **14**A depicts a front view of a device **370** comprising an inter-nasal electrode **372** attached to the end of a shaft **374** (shown in top view of FIG. **14**B). The shaft **374** is attached to a handle **376**. The device **370** comprises a second inter-nasal electrode **378** attached to the end of a second shaft **380**. The second shaft **380** is attached to a second handle **382**. A connection **384** between the two handles **376**, **382** may allow simultaneous deformation and treatment of the nostrils. External molds **386**, **388** are attached to the handles and can be moved relative to each electrode shaft **374**, **380**. The molds **386**, **388** may provide counter-traction, compression of tissue, positioning, and external tissue deformation.

FIG. **15**A depicts a front view of device **390** comprising a first inter-nasal electrode **392** and a second inter-nasal electrode **398**. As shown in the side view of FIG. **15**B, the device **390** comprises a first inter-nasal electrode **392** attached to the end of a shaft **394**. The shaft is attached to a handle **396**. A second inter-nasal electrode **398** is attached to the end of a second shaft **400**, as shown in the top view of FIG. **15**C. The second shaft **400** is attached to a second handle **402**. A connection **404** between the two handles **396**, **402** may allow simultaneous deformation and treatment of the nostrils. Additional internal shafts **406**, **408** comprise tissue-contacting surfaces and are attached to the handles **396**,**402**. The internal shafts **406**, **408** may be moved relative to each electrode shaft **394**, **400** (shown in FIG. **15**B) and may provide counter-traction and positioning.

FIG. **16** depicts a system **410** comprising a first device having an extra-nasal electrode **412** along a concave surface configured to positioned against an external surface of a patient's nose, the electrode **412** being attached to the end of a shaft **414**. The shaft **414** is attached to a handle **416**. A separate device **417** comprising an internal tissue mold **418** is attached to a shaft **420**. The internal tissue mold is configured to be positioned inside the patient's nasal valve. The shaft **420** is attached to a handle **422**. Each handle **422**, **416** may be manipulated individually and may apply energy and deformation to create a desired tissue effect.

FIG. **17**A depicts a side view of a device **430** comprising an extra-nasal electrode **431** attached to the end of a shaft **432**. The shaft **432** is attached to a handle **434**. The device **430** also comprises an internal tissue mold **436** attached to a shaft **438** which is attached to a handle **440**. The handles **434**, **440** are attached together and may be moved relative to each other to simultaneously deliver energy and deform tissue. FIG. **17**B depicts a front view of the device **430**.

FIG. **18** depicts a device **390** comprising pairs of bipolar electrodes **392** located at the distal end of a shaft **394**. The electrodes may be similar to the electrodes described with respect to the electrode configuration of FIG. **8**G in that they are non-penetrating. The shaft **394** is connected to a handle

398 which comprises a button 395 configured to activate and deactivate the electrodes. As stated above, the device 380 may either comprise a generator or be connected to a remote generator.

FIG. 19A depicts the treatment element 502 of a treatment device (e.g., device 30). The treatment element 502 of the device comprises a monopolar electrode 504. A cross-section of the treatment element 502 is shown in FIG. 19B. It comprises an asymmetrical shape and has a convex surface where the electrode is positioned configured to conform to only one of a patient's nostrils (for example, a patient's right nostril). More specifically, the convex surface is configured such that when inserted into the particular nostril, the convex surface would be located adjacent the upper lateral cartilage of the nasal valve of that nostril. The treatment element 502 further comprises a light 507 configured to illuminate the treatment area. For example an LED or a visible laser may be used. The visible laser may experience less diffusion in the tissue. Furthermore, the light 507 can be situated such that light can be transmitted through the nasal tissue (including the skin) and can be visualized externally by the user. The user can then use the light to properly position the device in the desired location. Because the electrode 504 is not centered on the treatment element 502 of the device, a separate device having a mirror-image configuration may be required to treat the other nostril.

FIG. 20A depicts the treatment element 512 of a treatment device (e.g., device 30). The treatment element 512 of the device comprises two monopolar electrodes 514, 516 provided side-by-side on a convex surface of the treatment element. The cross section of the treatment element 512, shown in FIG. 20B, is configured to conform to the shape either nostril, depending on which side of the device (and accordingly, which of electrode 514 or 516) is placed in contact with the patient's nasal valve. Comprising two monopolar electrodes 514, 516 may allow the same treatment element 512 to be used for treatment in both nostrils, and each electrode may be activated separately depending on which side needs to be utilized. The treatment element 512 also comprises two lights 518, 520 (e.g., LEDs, lasers) configured to illuminate the treatment area for both nostrils. One or both of the lights 518, 520 can also be situated such that light can be transmitted through the nasal tissue (including the skin) and can be visualized externally by the user. The user can then use the light to properly position the device in the desired location.

FIG. 21A depicts a treatment element 522 of a treatment device (e.g., device 30). The tip 522 of the device comprises a monopolar electrode 524. The tip 522 comprises a symmetrical cross-section as shown in FIG. 21B. The tip 522 comprises a light 526 (e.g., LED) configured to illuminate the treatment area. The light 526 can also be situated such that light can be transmitted through the nasal tissue (including the skin) and can be visualized externally by the user. The symmetrical tip allows the user to treat either left or right nostril. The user can then use the light to properly position the device in the desired location.

FIGS. 22A-G depict a treatment device 530 similar to the embodiments of FIGS. 8D, 9A, and 9B. FIGS. 22A and 22F provide perspective views of the device 530. The device 530 comprises a treatment element 532 at its distal tip 534. The treatment element 532 comprises an electrode 535. The body of the treatment element 532, itself, may comprise an insulating material. The treatment element 532 may be provided on an enlarged distal tip 534 of an elongate shaft 536, and as in the embodiment illustrated, may have a convex shape configured to press against and create a concavity in the nasal valve cartilage (e.g., in the upper lateral cartilage near the nasal valve). The distal tip 534 is located at the distal end of shaft 536. The shaft is attached at its proximal end to a handle 538. The handle 538 comprises an input control such as a power button 540 on its front side that may be used to activate and deactivate the electrode. The power button 540 may be positioned in a recess of the handle to allow for finger stability when activating and deactivating the electrode. In other embodiments, the input control is in the form of a switch or dial. Other configurations are also possible as described above.

The device 530 comprises a flexible wire or cable 542 electrically connected to an adaptor 544. The adaptor 544 can be used to connect the device 530 to a remote generator (not shown). The adaptor 544 may allow transmission of treatment energy between a remote generator and the device 530. The adaptor may also allow transmission of any sensor signals between the device 530 and a generator or control unit. The device 530 may either comprise an integrated generator or be connected to a remote generator. The treatment device 530 may be provided in a system or kit also including the remote generator. The system or kit (with or without the remote generator) may also include a grounding device and/or a cooling device as described above and further below. In some embodiments, the kit incudes a positioning element (e.g., a "cottle" device) configured to help a user locate the optimal treatment area.

FIGS. 22B and 22C depict front and back views of the device. As shown in FIGS. 22B and 22C, the handle 538 of the device generally as a rounded elongate shape. Other shapes are also possible. For example the device 530 may have a square shaped cross section. In some embodiments, a circumference (or width or cross-sectional area) of the handle 538 may increase distally along the length of the handle 538.

FIGS. 22D and 22E depict side views of the device. As shown in FIGS. 22D and 22E, the handle 538 of the device 530 may comprise an indentation or recess around the middle of the handle 538. This may allow for enhanced grip and control when a user is holding the device. The indentation or recess may be near the input control or power button 540 to allow a user to easily activate and deactivate the device while holding it in a comfortable position.

In some embodiments, the shaft has a width or diameter of about 0.125 inches to about 0.25 inches. In some embodiments, the shaft is about 1.5 inches to about 4 inches long. In some embodiments, the shaft comprises a polymer such as polycarbonate or PEEK. In other embodiments, the shaft comprises stainless steel or other metals. The metals may be coated with an external and/or internal insulating coating (e.g., polyester, polyolefin, etc.). The handle may comprise the same material as the shaft, in some embodiments. In some embodiments, the shaft is rigid. This may allow a user of the device increased control over the deformation of nasal tissue. In some embodiments, the shaft comprises some amount of flexibility. This flexibility may allow a user adjust an angle of the distal tip by bending the distal end of the shaft.

FIG. 22G depicts a larger view of the distal tip 534 of the device 530. As shown best in FIG. 22G, the treatment element 532 comprises a generally elongate shape. The front of the treatment element 532 comprises a shallow, curved surface, providing a convex shape configured to deform the nasal tissue and create a concavity therein. In some embodiments, the front of the treatment element comprises a concave shape. The shape of the front surface of the treatment element may be selected to conform to the nasal tissue.

The back of the treatment element **532** also comprises a shallow curved surface. As best seen in FIGS. **22**D and **22**E, the back surface varies in width along the length of the back surface of the treatment element **532**. The back surface widens, moving distally along the tip until it is nearly in line with the proximal end of the electrode plate **532**. The back surface then narrows towards the distal tip of the treatment element **532**. This shape may maximize visualization of the area to be treated, while, at the same time, providing sufficient rigidity for treatment. Other shapes are also possible. For example, the treatment element may comprise a generally spherical or cylindrical shape. In some embodiments, the treatment element comprises an angular shape (e.g., triangular, conical) which may allow for close conformation to the tissue structures. The treatment element **532** comprises a monopolar electrode plate **532**. The monopolar electrode plate **532** can be in the shape of a rectangle having a curved or convex tissue-facing surface. Other shapes are also possible (e.g., square, circular, ovular, etc.). The electrode **532** may protrude slightly from the treatment element **535**. This may allow the electrode to itself provide a convex shape configured to create a concavity in tissue to be treated.

In some embodiments, the treatment element has a width or diameter of about 0.25 inches to about 0.45 inches. In some embodiments, the treatment element is about 0.4 inches to about 0.5 inches long. The treatment element can, in some embodiments, comprise a ceramic material (e.g., zirconium, alumina, silicon glass). Such ceramics may advantageously possess high dielectric strength and high temperature resistance. In some embodiments, the treatment element comprises polyimides or polyamides which may advantageously possess good dielectric strength and elasticity and be easy to manufacture. In some embodiments, the treatment element comprises thermoplastic polymers. Thermoplastic polymers may advantageously provide good dielectric strength and high elasticity. In some embodiments, the treatment element comprises thermoset polymers, which may advantageously provide good dielectric strength and good elasticity. In some embodiments, the treatment element comprises glass or ceramic infused polymers. Such polymers may advantageously provide good strength, good elasticity, and good dielectric strength.

In some embodiments, the electrode has a width of about 0.15 inches to about 0.25 inches. In some embodiments, the electrode is about 0.2 inches to about 0.5 inches long. In some embodiments, the treatment element comprises steel (e.g., stainless, carbon, alloy). Steel may advantageously provide high strength while being low in cost and minimally reactive. In some embodiments, the electrodes or energy delivery elements described herein comprise materials such as platinum, gold, or silver. Such materials may advantageously provide high conductivity while being minimally reactive. In some embodiments, the electrodes or energy delivery elements described herein comprise anodized aluminum. Anodized aluminum may advantageously be highly stiff and low in cost. In some embodiments, the electrodes or energy delivery elements described herein comprise titanium which may advantageously possess a high strength to weight ratio and be highly biocompatible. In some embodiments, the electrodes or energy delivery elements described herein comprise nickel titanium alloys. These alloys may advantageously provide high elasticity and be biocompatible. Other similar materials are also possible.

As shown in the embodiment of FIG. **22**G, the treatment element **532** further comprises a pin-shaped structure comprising a thermocouple **533** within an insulating bushing extending through a middle portion of the plate **532**. In some embodiments, different heat sensors (e.g., thermistors) may be used. In some embodiments, the thermocouple **533** is configured to measure a temperature of the surface or subsurface of tissue to be treated or tissue near the tissue to be treated. A pin-shape having a sharp point may allow the structure to penetrate the tissue to obtain temperature readings from below the surface. The thermocouple can also be configured to measure a temperature of the treatment element **532** itself. The temperature measurements taken by the thermocouple can be routed as feedback signals to a control unit (e.g., the control unit **42** described with respect to FIG. **3**) and the control unit can use the temperature measurements to adjust the intensity of energy being delivered through the electrode. In some embodiments, thermocouples or other sensing devices may be used to measure multiple tissue and device parameters. For example, multiple thermocouples or thermistors may be used to measure a temperature at different locations along the treatment element. In some embodiments, one of the sensors may be configured to penetrate deeper into the tissue to take a measurement of a more interior section of tissue. For example, a device may have multiple sensors configured to measure a temperature at the mucosa, the cartilage, and/or the treatment element itself. As described above, in some embodiments, the sensors described herein are configured to take a measurement of a different parameter. For example, tissue impedance can be measured. These measurements can be used to adjust the intensity and/or duration of energy being delivered through the treatment element. This type of feedback may be useful from both an efficacy and a safety perspective.

As shown in FIG. **22**G, in some embodiments the thermocouple is within a pin shaped protrusion on the surface of the electrode **532**. In other embodiments, the thermocouple can simply be on the surface of the electrode. In other embodiments, the thermocouple can protrude from the surface of the electrode in a rounded fashion. Rounded structures may be pressed into the tissue to obtain subsurface temperature readings. Other configurations and locations for the thermocouple are also possible. The use of thermocouples or temperature sensors may be applied not only to the embodiment of FIG. **22**G, but also to any of the other embodiments described herein.

FIGS. **23**A-G depict a treatment device **550** similar to the embodiments of FIGS. **8**F and **18**. FIGS. **23**A and **23**F are perspective views of the device **550** and show the device **550** comprising a treatment element **552** at the distal tip **556** of the device **550**. The treatment element **552** may be provided on an enlarged distal tip **556** of an elongate shaft **558**, and as in the embodiment illustrated, may have a convex shape configured to press against and create a concavity in the nasal valve cartilage (e.g., in upper lateral cartilage of the nasal valve). The distal tip **556** is located at a distal end of shaft **558**. The shaft is attached at its proximal end to a handle **560**. The handle **560** comprises an input control, such as a power button **562**, on its front side that may be used to activate and deactivate the electrode. The power button may be positioned in a recess of the handle to allow for finger stability when activating and deactivating the electrode. In other embodiments, the input control is in the form of a switch or dial. Other configurations are also possible as described above. The device **550** may either comprise a generator or be connected to a remote generator. The device **550** may comprise a flexible wire or cable **564** that connects to an adaptor **566** that is configured to be plugged into a remote generator (not shown). The adaptor **566** may allow transmission of treatment energy between a remote generator and the device **550**. The adaptor **566** may also allow

transmission of any sensor signals between the device **550** and a generator or control unit. The treatment device **550** may be provided in a system or kit also including the remote generator. The system or kit (with or without the remote generator) may also include a grounding device and/or a cooling device as described above and further below. In some embodiments, the kit includes a positioning element (e.g., a "cottle" device) configured to help a user locate the optimal treatment area.

In some embodiments, the shaft has a width or diameter or about 0.235 inches to about 0.25 inches. In some embodiments, the shaft is about 1.5 inches to about 4 inches long. In some embodiments, the shaft and/or handle comprises a polymer such as polycarbonate or PEEK. In other embodiments, the shaft comprises stainless steel or other metals. The metals may be coated with an external and/or internal insulating coating (e.g., polyester, polyolefin, etc.). The handle may comprise the same material as the shaft, in some embodiments. In some embodiments, the shaft is rigid. This may allow a user of the device increased control over the deformation of nasal tissue. In some embodiments, the shaft comprises some amount of flexibility. This flexibility may allow a user adjust an angle of the distal tip by bending the distal end of the shaft.

FIGS. **23**B and **23**C depict side views of the device. As shown in FIGS. **23**B and **23**C, the handle **560** of the device **550** may comprise an indentation or recess around the middle of the handle **560**. This may allow for enhanced grip and control when a user is holding the device. The indentation or recess may be near the input control or power button **562** to allow a user to easily activate and deactivate the device while holding it in a comfortable position.

FIGS. **23**D and **23**E depict front and back views of the device. As shown in FIGS. **23**D and **23**E, the handle **560** of the device generally comprises a rounded elongate shape. Other shapes are also possible. For example the device **550** may have a square shaped cross section. In some embodiments, a circumference (or width or cross-sectional area) of the handle **560** may increase distally along the length of the handle **560**.

FIG. **23**G depicts a larger view of the distal tip **556** of the device **550**. As shown best in FIG. **23**G, the treatment element **552** comprises a generally elongate shape. The front of the treatment element **552** comprises a shallow curved surface, providing a convex shape configured to deform the nasal tissue and create a concavity therein. In some embodiments, the front of the treatment element comprises a concave shape. The shape of the front surface of the treatment element may be selected to conform to the nasal tissue. The back surface of the treatment element **552** comprises a shallow curved surface along most of its length. As best seen in FIGS. **23**B and **23**C, the back surface narrows distally along the length of the element **552** from approximately the distal end of the needle electrodes to the distal tip of the treatment element **552**. This shape may maximize visualization of the area to be treated, while, at the same time, providing sufficient rigidity for treatment. Other shapes are also possible. For example, the treatment element may comprise a generally spherical or cylindrical shape. In some embodiments, the treatment element comprises an angular shape (e.g., triangular, conical) which may allow for close conformation to the tissue structures. The treatment element **552** comprises a monopolar or bipolar needle array comprising multiple needles **554**. In some embodiments, the needles **554** are energized in between select needles to deliver bipolar energy. In other embodiments, the energy is delivered between the needles (**554**) and a remote grounding pad (not shown). In some embodiments, the electrode needle pairs are arranged horizontally across the treatment element **552**. In some embodiments, the electrode needle pairs are arranged vertically across the treatment element **552**, or along the direction of the shaft **558** and handle **560**. Other configurations are also possible. For example, the needle pairs may be arranged diagonally across the treatment element **552**. The treatment element **552** may be placed either internally, with the needle pairs **554** positioned transmucosally or the treatment element **552** may be placed externally with the needle pairs **554** positioned transdermally. The distal tip **556** of the device **550** may also function as a mold or molding element. In a monopolar embodiment, the energy may be selectively delivered between certain sets of needles, all needles, or even individual needles to optimize the treatment effect.

The treatment element **552** of the device **550** further comprises a pin-shaped structure comprising a thermocouple **555** within an insulating bushing extending through a middle portion of the front surface of the treatment element **552**. In some embodiments, different heat sensors (e.g., thermistors) may be used. As described above, in some embodiments, the thermocouple **555** is configured to measure a temperature of the surface or subsurface of tissue to be treated or tissue near the tissue to be treated. A pin-shape having a sharp point may allow the structure to penetrate the tissue to obtain temperature readings from below the surface. The thermocouple can also be configured to measure a temperature of the treatment element **552** itself. The temperature measurements taken by the thermocouple can be routed as feedback signals to a control unit (e.g., the control unit **42** described with respect to FIG. **3**) and the control unit can use the temperature measurements to adjust the intensity of energy being delivered through the electrode. In some embodiments, thermocouples or other sensing devices may be used to measure multiple tissue and device parameters. For example, multiple thermocouples or thermistors may be used to measure a temperature at different locations along the treatment element. In some embodiments, one of the sensors may be configured to penetrate deeper into the tissue to take a measurement of a more interior section of tissue. For example, a device may have multiple sensors configured to measure a temperature at the mucosa, the cartilage, and/or the treatment element itself. As described above, in some embodiments, the sensors described herein are configured to take a measurement of a different parameter. For example, tissue impedance can be measured. These measurements can be used to adjust the intensity and/or duration of energy being delivered through the treatment element. This type of feedback may be useful from both an efficacy and a safety perspective.

In some embodiments, the treatment element has a width or diameter of about 0.25 inches to about 0.45 inches. In some embodiments, the treatment element is about 0.4 inches to about 0.5 inches long. The treatment element can, in some embodiments, comprise a ceramic material (e.g., zirconium, alumina, silicon glass). Such ceramics may advantageously possess high dielectric strength and high temperature resistance. In some embodiments, the treatment element comprises polyimides or polyamides which may advantageously possess good dielectric strength and elasticity and be easy to manufacture. In some embodiments, the treatment element comprises thermoplastic polymers. Thermoplastic polymers may advantageously provide good dielectric strength and high elasticity. In some embodiments, the treatment element comprises thermoset polymers, which may advantageously provide good dielectric strength and

good elasticity. In some embodiments, the treatment element comprises glass or ceramic infused polymers. Such polymers may advantageously provide good strength, good elasticity, and good dielectric strength.

In some embodiments, the electrodes have a width or diameter of about 0.15 inches to about 0.25 inches. In some embodiments, the electrode is about 0.2 inches to about 0.5 inches long. In some embodiments, the treatment element comprises steel (e.g., stainless, carbon, alloy). Steel may advantageously provide high strength while being low in cost and minimally reactive. In some embodiments, the electrodes or energy delivery elements described herein comprise materials such as platinum, gold, or silver. Such materials may advantageously provide high conductivity while being minimally reactive. In some embodiments, the electrodes or energy delivery elements described herein comprise anodized aluminum. Anodized aluminum may advantageously be highly stiff and low in cost. In some embodiments, the electrodes or energy delivery elements described herein comprise titanium which may advantageously possess a high strength to weight ratio and be highly biocompatible. In some embodiments, the electrodes or energy delivery elements described herein comprise nickel titanium alloys. These alloys may advantageously provide high elasticity and be biocompatible. Other similar materials are also possible.

Energy applied to the tissue to be treated using any combination of the embodiments described in this application may be controlled by a variety of methods. In some embodiments, temperature or a combination of temperature and time may be used to control the amount of energy applied to the tissue. Tissue is particularly sensitive to temperature; so providing just enough energy to reach the target tissue may provide a specific tissue effect while minimizing damage resulting from energy causing excessive temperature readings. For example, a maximum temperature may be used to control the energy. In some embodiments, time at a specified maximum temperature may be used to control the energy. In some embodiments, thermocouples, such as those described above, are provided to monitor the temperature at the electrode and provide feedback to a control unit (e.g., control system **42** described with respect to FIG. **3**). In some embodiments, tissue impedance may be used to control the energy. Impedance of tissue changes as it is affected by energy delivery. By determining the impedance reached when a tissue effect has been achieved, a maximum tissue impedance can be used to control energy applied.

In the embodiments described herein, energy may be produced and controlled via a generator that is either integrated into the electrode handpiece or as part of a separate assembly that delivers energy or control signals to the handpiece via a cable or other connection. In some embodiments, the generator is an RF energy source configured to communicate RF energy to the treatment element. For example, the generator may comprise a 460 KHz sinusoid wave generator. In some embodiments, the generator is configured to run between about 1 and 100 watts. In some embodiments, the generator is configured to run between about 5 and about 75 watts. In some embodiments, the generator is configured to run between about 10 and 50 watts.

In some embodiments, the energy delivery element comprises a monopolar electrode (e.g., electrode **535** of FIG. **22**G). Monopolar electrodes are used in conjunction with a grounding pad. The grounding pad may be a rectangular, flat, metal pad. Other shapes are also possible. The grounding pad may comprise wires configured to electrically connect the grounding pad to an energy source (e.g., an RF energy source).

In some embodiments, the energy delivery element such as the electrodes described above can be flat. Other shapes are also possible. For example, the energy delivery element can be curved or comprise a complex shape. For example, a curved shape may be used to place pressure or deform the tissue to be treated. The energy delivery element may comprise needles or microneedles. The needles or microneedles may be partially or fully insulated. Such needles or microneedles may be configured to deliver energy or heat to specific tissues while avoiding tissues that should not receive energy delivery.

In some embodiments, the electrodes or energy delivery elements described herein comprise steel (e.g., stainless, carbon, alloy). Steel may advantageously provide high strength while being low in cost and minimally reactive. In some embodiments, the electrodes or energy delivery elements described herein comprise materials such as platinum, gold, or silver. Such materials may advantageously provide high conductivity while being minimally reactive. In some embodiments, the electrodes or energy delivery elements described herein comprise anodized aluminum. Anodized aluminum may advantageously be highly stiff and low in cost. In some embodiments, the electrodes or energy delivery elements described herein comprise titanium which may advantageously possess a high strength to weight ratio and be highly biocompatible. In some embodiments, the electrodes or energy delivery elements described herein comprise nickel titanium alloys. These alloys may advantageously provide high elasticity and be biocompatible. Other similar materials are also possible.

In some embodiments, the treatment elements (e.g., non-electrode portion of treatment element) of the devices described herein, including but not limited to FIGS. **8**A-J, **9**A-B, **10**A-b, **11**A-B, **12**A-B, **13**A-E, **14**A-B, **15**A-C, **16**, **17**A-B, **18**, **22**A-G, **19**A-B, **20**A-B, **21**A-B, **22**A-G, **23**A-G, **25**A-B, **26**, **27**, **28**A-E, and **29**, comprise an insulating material such as a ceramic material (e.g., zirconium, alumina, silicon glass). In some embodiments, the treatment elements comprise an insulating material interposed between multiple electrodes or electrode section. These insulating sections may provide an inert portion of the treatment element that does not delivery energy to the tissue. Such ceramics may advantageously possess high dielectric strength and high temperature resistance. In some embodiments, the insulators described herein comprise polyimides or polyamides which may advantageously possess good dielectric strength and elasticity and be easy to manufacture. In some embodiments, the insulators described herein comprise thermoplastic polymers. Thermoplastic polymers may advantageously provide good dielectric strength and high elasticity. In some embodiments, the insulators described herein comprise thermoset polymers, which may advantageously provide good dielectric strength and good elasticity. In some embodiments, the insulators described herein comprise glass or ceramic infused polymers. Such polymers may advantageously provide good strength, good elasticity, and good dielectric strength.

In some embodiments, the handle and/or shaft of the devices comprise the same materials as those described with respect to the insulators. In some embodiments, the handle and/or shaft of the device comprises a metal, such as stainless steel. In other embodiments, the handle and/or shaft of the device comprises a polymer, such as polycarbonate. Other metals and polymers are also contemplated.

In some embodiments, the device may be used in conjunction with a positioning element that can be used to aid in positioning of the device. The positioning element may be integrated into the device itself or can be separate. The positioning element may be used to determine the optimal placement of the device to achieve maximal increase in efficacy. In some embodiments, a positioning element is configured to be inserted and manipulated within the nose until the patient reports a desired improvement in breathing. The treatment device may then be used to treat while the positioning element is holding the nose in the desired configuration. In some embodiments, molds described herein may be used for the same purpose.

In some embodiments, a positioning element comprises a shaft comprising measurement marks indicating depth. For example, a physician may insert this element into the nose to manipulate the tissue to find the depth of treatment at which the patient reports the best breathing experience. The positioning element may comprise marks around the base of the shaft indicating which point of rotation of the device within the nostril provides the best breathing experience. The positioning element may also comprise marks indicating angle of insertion. The physician may then use the measurement marks to guide insertion of the treatment element to the same spot.

It will be appreciated that any combination of electrode configurations, molds, handles, connection between handles, and the like may be used to treat the nasal valve. Cooling Systems

Embodiments of devices configured to heat specific tissue while maintaining lower temperatures in other adjacent tissue are provided. These devices may be incorporated into any of the treatment apparatuses and methods described herein. The nasal valve is an example of a tissue complex that includes adjacent tissues that may benefit from being maintained at different temperatures. Other examples include the skin, which comprises the epidermis, dermis, and subcutaneous fat, the tonsils, which comprise mucosa, glandular tissue, and vessels. Treatment of other tissue complexes is also possible. For example, in some embodiments, the internal structures of the nasal valve may be heated while maintaining a lower temperature in the mucosal lining of the nose and/or skin. In other embodiments, the mucosa may be heated, while maintaining lower temperatures in the skin. Limiting unwanted heating of non-target tissues may allow trauma and pain to be reduced, may reduce scarring, may preserve tissue function, and may also decrease healing time. Combinations of heat transfer and/or heat isolation may allow directed treatment of specific tissue such as cartilage, while excluding another tissue, such as mucosa, without surgical dissection.

Generally, when using a device **570** with an electrode **572** (e.g., monopolar RF electrode) to heat nasal cartilage, the electrode **572** must be in contact with the mucosa. FIG. **24**A shows a cross-section of tissue at the nasal valve. The cross-section shows that the nasal cartilage **704** sits in between a layer of mucosa (internal) **702** and a layer of skin (external) **706**. When the electrode **572** is activated, both the mucosa and the cartilage are heated by the current flowing from the electrode to the return (e.g., ground pad), as shown in FIG. **24**B. The tissue closest to the electrode **572** receives the highest current density, and thus, the highest heat. A surface cooling mechanism may allow the temperature of the electrode surface to be reduced. Such a cooling mechanism may maintain a lower temperature at the mucosa even though current flow will continue to heat the cartilage.

FIG. **25**A depicts a device **580** configured to treat the nasal valve using an electrode while maintaining a reduced temperature at the mucosa. The device comprises a treatment element **582** comprising an electrode **584** at the distal tip of the device **580**. The treatment element **582** is attached to a distal end of a shaft **586**, which is attached to the distal end of a handle **588**. Input and output coolant lines **590**, **592** are attached to a pump and reservoir **594** and extend into the handle **588**, through the distal end of the treatment element **582** to the electrode **582** and return back through the shaft **586** and handle **588** to the pump and reservoir **594**. The coolant may be remotely cooled in the reservoir and may comprise a fluid or gas. The coolant flowing through the electrode **582** may allow the treatment element **582** to be maintained at a reduced temperature while still allowing current flow to heat the cartilage. Examples of coolant include air, saline, water, refrigerants, and the like. Water may advantageously provide moderate heat capacity and be non reactive. Refrigerants may advantageously be able to transfer significant amounts of heat through phase change. The coolant may flow through internal or external cavities of the electrode or wand tip. For example, FIG. **25**B depicts an embodiment of a device **600** comprising a treatment element **602** with an electrode **604** at the distal tip of the device **600**. The treatment element **602** is attached to the distal end of a shaft **606** which is attached to the distal end of a handle **608**. The handle may be attached to a cable comprises a lumen or channel **611** through which gas or fluid may flow. The lumen **611** may diverge, near the treatment element **602**, into separate external channels flowing over the electrode **604**. The lumen **611** and channels **610** or cavities may be attached to a fan or fluid pump **612**. In some embodiments, the fan or fluid pump may remotely cool the gas or fluid.

FIG. **26** depicts another embodiment of a device **620** configured to treat the nasal valve using an electrode **624** while maintaining a reduced temperature at the mucosa and/or skin. The device comprises a treatment element **622** comprising an electrode **624** at its distal end. The treatment element **622** is connected to the distal end of a shaft **626** which is connected to the distal end of a handle **628**. The device **620** comprises a heat pipe **630** attached to the electrode **624** or treatment element **622**. The heat pipe **630** is configured to transfer heat to a remote heat sink **632**. As shown in FIG. **26**, the heat sink **632** may be placed in the handle of the device. In some embodiments, the heat sink may be placed remotely. The heat pipe **630** may comprise a sealed tube (e.g., a copper tube) filled with a material that evaporates at a given temperature. When one end of the heat pipe **630** is heated, the fluid may evaporate and flow to the opposite end where it may condense and subsequently transfer heat to the heat sink **632**. Using a material such as copper for the heat pipe **630** and/or heat sink **632** may advantageously provide high heat and electrical conductivity.

FIG. **27** depicts another embodiment of a device **640** configured to treat the nasal valve using a bipolar electrode pair while maintaining a reduced temperature at the skin. The device **640** comprises a first treatment element **642** comprising a first electrode **644** of a bipolar electrode pair at the distal end of a shaft **646**. The treatment element **642** comprises a thermocouple pin **650** like that described with respect to FIG. **22**G. The shaft **646** is connected to the distal end of a handle **648**. The handle **648** is connected to another handle **652** comprising a shaft **654** with a treatment element **656** at its distal tip. The treatment element **656** comprises a second electrode **657** of the bipolar electrode pair. The first and second treatment elements **642**, **656** can be placed on

either side of nasal tissue. For example, the first treatment element **642** may be in contact with the mucosa and the second treatment element **656** may be in contact with the skin. Similar to the device depicted in FIG. **26**, the device of FIG. **27** comprises a heat pipe within both shafts **654**, **646**. Thus heat from the tissue is transferred from the treatment elements **642**, **656** and is transported down the shafts **654**, **646** into an integrated or a remote heat sink (not shown). This heat transfer may keep the skin and the mucosa relatively cool while still delivering sufficient treatment energy to the cartilage. The connection **658** and spring **647** between the two handles **648**, **652** is configured to bias the two shafts **646**, **654** and treatment elements **642**, **656** towards a collapsed state. Squeezing the handles **648**, **652** may separate the two shafts **646**, **654** and treatment elements **642**, **656**. Thus, the handles **648**, **652** can be squeezed to properly position the device **640** at the nasal tissue to be treated. Releasing the handles **648**, **652** can cause the treatment element **642** and the cooling element **656** to contact the tissue. In some embodiments, the device **640** may only comprise one heat pipe. In some embodiments, the device **640** may comprise a treatment element with a monopolar electrode on one shaft and a molding element on the other shaft. Multiple configurations are contemplated. For example, the device may comprise one heat pipe and a bipolar electrode pair. For another example, the device may comprise one heat pipe and a monopolar electrode. For another example, the device may comprise two heat pipes and a monopolar electrode. Other device configurations are also possible.

The embodiments described with respect to FIGS. **25**A-**27** employ specific differential cooling mechanisms to maintain different and particular temperatures in adjacent tissues. FIGS. **28**A-**28**E depicts various examples of more general mechanisms configured to maintain different temperatures in adjacent tissues. FIGS. **28**A-**28**E depict examples of differential cooling mechanisms as applied to a cross-section of tissue at the nasal valve, like that shown in FIG. **24**A.

As shown in FIG. **28**A, in some embodiments, the differential cooling mechanism comprises two elements: a first element **708** and a second element **710**. The two elements are on either side of the thickness of the nasal tissue. In one embodiment, the mechanism is configured to maintain normal temperatures in the cartilage **704** while cooling the mucosa **702** and the skin **706**. In such an embodiment, the first and second elements **708**, **710** comprise a cooling apparatus such as those described above (e.g., heatsink, coolant lines, etc.). In some embodiments, the mucosa **702** and the skin **706** are heated while normal temperatures are maintained in the cartilaginous middle layer **704**. The cartilage **704** may be somewhat warmed, in such embodiments, but may be cooler than the mucosa **702** and the skin **706**. In such embodiments, the first and second elements **708**, **710** comprise a heating apparatus, such as radio frequency electrodes or resistive heating elements. In some embodiments, the mucosa **702** is heated, the skin **706** is cooled, and normal temperatures are maintained in the cartilage **704**. In such embodiments, the first element **708** comprises a heating apparatus and the second element **710** comprises a cooling apparatus. For example, the device **580**, described with respect to FIG. **27**, may use such a mechanism. In some embodiments, the skin **706** is heated, the mucosa **702** is cooled, and normal temperatures are maintained in the cartilage **704**. In such embodiments, the first element **708** comprises a cooling apparatus and the second element **710** comprises a heating apparatus. Again, the device **580**, described with respect to FIG. **27**, is an example of a device that may use such a mechanism.

FIG. **28**B shows an example of one of the embodiments described with respect to FIG. **28**A. The first element **730** is on the mucosal surface **702**. The second element **732** is an energy delivery element and is positioned on the skin side **706** of the tissue thickness. The first element **730** comprises a cooling apparatus and the second element **732** comprises an energy delivery element (e.g., an RF electrode). The mucosal layer **702** is cooled while the skin **706** and cartilaginous areas **704** are heated. In other embodiments, the first element **730** can be positioned on the skin **706** and the second element **732** can be positioned on the mucosa **702**. In such embodiments, the skin **706** is cooled while the mucosa **702** and the cartilage **704** are heated.

As shown in FIG. **28**C, in some embodiments, the differential cooling mechanism comprises a first element **720** and a second element **722**. Both elements **720**, **722** are on the mucosa **702** side of the tissue thickness. In some embodiments, the mucosal layer **702** is cooled while higher temperatures are maintained in the middle cartilaginous layer **704**. In such embodiments, the first element **720** comprises a cooling apparatus, and the second element **722** comprises an energy delivery apparatus (e.g., a monopolar radiofrequency electrode). In some embodiments, the first element **720** is sufficiently efficient to maintain cool temperatures at the mucosa **702** despite the energy provided by the second element **722**. In other embodiments, the first and second elements **720**, **722** are both positioned on the skin side **706** of the tissue thickness. In such embodiments, the skin **706** is cooled while higher temperatures are maintained in the middle cartilaginous layer.

As shown in FIG. **28**D, in some embodiments, the differential cooling mechanism comprises a first surface element **740** and a second surface element **742** on either side of the tissue thickness. A third subsurface element **744** is engaged through the mucosa **702** and into the cartilage area **704**. In some embodiments, the mucosa **702** and the skin **706** are cooled while the middle cartilaginous layer **704** is heated. In such embodiments, the first and second elements **740**, **742** comprise cooling apparatus while the third element **744** comprises a heating element (e.g., RF monopolar electrode, RF bipolar needles, etc.). In other embodiments, the third subsurface element **744** may be engaged through the skin **706** and into the cartilage area **704**.

As shown in FIG. **28**E, in some embodiments, the differential cooling mechanism comprises a first surface element **750** and a second surface element **752** on either side of the tissue thickness. The differential cooling mechanism further comprises a third surface element **754** and a fourth surface element **756** on either side of the tissue thickness. In some embodiments, the cartilage layer **704** is heated while the mucosa **702** and the skin **706** are cooled. In such embodiments, the first and second elements **750**, **752** comprise cooling apparatus and the third and fourth elements **754**, **756** comprise energy delivery apparatuses (e.g., bipolar plate electrodes). In some embodiments, the cartilage **704** and mucosal **702** layers are heated while the skin **706** is cooled. In such embodiments, the first element **750** comprises a heating apparatus; the second element **752** comprises a cooling apparatus; and the third and fourth elements **754**, **756** comprise energy delivery apparatuses. It will be appreciated that different differential temperature effects can be achieved by reconfiguring and adding or subtracting to the described configuration of elements.

Cooling occurring before, during, or after treatment may effect reduced temperature of the skin and/or mucosa. In

some embodiments, attaching passive fins or other structures to the electrode or wand tip may allow for heat dissipation to the surrounding air. In some embodiments, the device may be configured to spray a cool material such as liquid nitrogen before, during, or after treatment. Using a material such as copper for the passive fins or other structure may advantageously provide high heat and electrical conductivity. In some embodiments, using metals with a high heat capacity in the device (e.g., in the energy delivery element, the re-shaping element, or both) may advantageously provide the ability to resist temperature change during energy delivery. In some embodiments, pre-cooling the electrode (e.g., by refrigeration, submersion, spraying with a cool substance like liquid nitrogen, etc.) may maintain a reduced temperature at the mucosa. Any combination of the cooling methods described herein may be used in conjunction with any of the energy delivery methods described herein (e.g., bipolar RF electrodes, arrays needles, plates, etc.). For example, FIG. **29** depicts an embodiment of a device **800** comprising a treatment element **802** comprising electrode needles **804** at its distal tip. The device **800** may be used in conjunction with a separate cooling device **810** which may comprise channels **815** or cavities to circulate air or fluid. The independent cooling device **810** may, in other embodiments, employ a different cooling mechanism.

In embodiments using laser energy to heat cartilage, it is possible to use a combination of two or more lasers whose beams converge at a location within the target tissue. This convergence may cause more heat at that junction as compared to locations where only a single beam is acting. The junction may be controlled manually or via computer control. Specific treatment may be provided.

In some embodiments, insulating material may be used to protect non-target tissue during energy delivery. For example, an electrode needle may be preferentially insulated on a portion of the needle that is in contact with non-target tissue. For another example, flat electrode blades may be insulated on a portion of the blade that is in contact with non-target tissue. Other configurations for heat isolation are also possible.

Any of the cooling mechanisms or combinations of the cooling mechanisms described herein may be used in conjunction with any of the devices or combinations of devices described herein, or the like.

Examples of Methods of Treatment

Embodiments of methods for treating nasal airways are now described. Such methods may treat nasal airways by decreasing the airflow resistance or the perceived airflow resistance at the site of an internal or external nasal valve. Such treatments may also address related conditions, such as snoring.

In one embodiment, a method of decreasing airflow resistance in a nasal valve comprises the steps of inserting an energy-delivery or cryo-therapy device into a nasal passageway, and applying energy or cryo-therapy to a targeted region or tissue of the nasal passageway. For example, in some embodiments, the method may include delivering energy or cryo-therapy to a section of internal nasal valve cartilage in the area of the upper lateral cartilage, or in the area of intersection of the upper and lower lateral cartilage. In alternative embodiments, the method may deliver energy to the epithelium, or underlying soft tissue adjacent to the upper lateral cartilage and/or the intersection of the ULC and the LLC.

In another embodiment, a method comprises heating a section of nasal valve cartilage to be re-shaped, applying a mechanical re-shaping force, and then removing the heat. In some embodiments, the step of applying a mechanical re-shaping force may occur before, during or after the step of applying heat.

In some embodiments, the method may further include the step of inserting a re-shaping device into the nasal passageway after applying an energy or cryo-therapy treatment. In such embodiments, a re-shaping device such as an external adhesive nasal strip (such as those described for example in U.S. Pat. No. 5,533,499 to Johnson or U.S. Pat. No. 7,114,495 to Lockwood, the entirety of each of which is hereby incorporated by reference) may be applied to the exterior of the nose after the treatment in order to allow for long-term re-shaping of nasal valve structures as the treated tissues heal over time. In alternative embodiments, a temporary internal re-shaping device (such as those taught in U.S. Pat. No. 7,055,523 to Brown or U.S. Pat. No. 6,978,781 to Jordan, the entirety of each of which is hereby incorporated by reference) may be placed in the nasal passageway after treatment in order to allow for long-term re-shaping of nasal valve structures as the treated tissues heal over time. In some embodiments, the dilating nasal strips can be worn externally until healing occurs.

In alternative embodiments, internal and/or external re-shaping devices may be used to re-shape a nasal valve section prior to the step of applying energy or cryo-therapy treatments to targeted sections of the epithelial, soft tissue, mucosa, submucosa and/or cartilage of the nose. In some embodiments, the energy or cryo-therapy treatment may be configured to change the properties of treated tissues such that the tissues will retain the modified shape within a very short time of the treatment. In alternative embodiments, the treatment may be configured to re-shape nasal valve structures over time as the tissue heals.

In some embodiments, a portion of the nose, the nasal valve and/or the soft tissue and cartilage of the nasal valve may be reshaped using a re-shaping device and then fixed into place. In some embodiments, such fixation may be achieved by injecting a substance such as a glue, adhesive, bulking agent or a curable polymer into a region of the nasal tissue adjacent the target area. Alternatively, such a fixation substance may be applied to an external or internal surface of the nose.

In some embodiments, an injectable polymer may be injected into a region of the nose, either below the skin on the exterior of the nose, or under the epithelium of the interior of the nose. In some embodiments, an injectable polymer may include a two-part mixture configured to polymerize and solidify through a purely chemical process. One example of a suitable injectable two-part polymer material is described in US Patent Application Publication 2010/0144996, the entirety of which is hereby incorporated by reference. In other embodiments, an injectable polymer may require application of energy in order to cure, polymerize or solidify. A re-shaping device may be used to modify the shape of the nasal valve before or after or during injection of a polymer. In embodiments employing an energy-curable polymer, a re-shaping device may include energy-delivery elements configured to deliver energy suitable for curing the polymer to a desired degree of rigidity.

In another embodiment, the soft tissue of the upper lip under the nares may be debulked or reshaped to reduce airflow resistance. In some embodiments, such re-shaping of the upper lip soft tissue may be achieved by applying energy and/or cryotherapy from an external and/or internal treatment element. In some embodiments, the tissue of the upper lip under the nares may be compressed by an internal or external device prior to or during application of the energy

or cryo-therapy. For example, devices such as those shown in FIGS. **5**A and **5**B may be adapted for this purpose by providing tissue-engaging clamp tips shaped for the purpose.

In another embodiment, the muscles of the nose and/or face are stimulated to dilate the nasal valve area prior to or during application of other treatments such as energy/cryo application or fixation treatments. In such embodiments, the muscles to be treated may include the nasal dilator muscles (nasalis) the levetator labii, or other facial muscles affecting the internal and/or external nasal valves. In some embodiments, the targeted muscles may be stimulated by applying an electric current to contract the muscles, mentally by the patient, or manually by the clinician.

In some embodiments, the muscles of the nose and/or face may also be selectively deactivated through chemical, ablative, stimulatory, or mechanical means. For example, muscles may be deactivated by temporarily or permanently paralyzing or otherwise preventing the normal contraction of the muscle tissue. Chemical compounds for deactivating muscle tissues may include botulinum toxin (aka "botox"), or others. Ablative mechanisms for deactivating muscle tissue may include RF ablation, laser ablation or others. Mechanical means of deactivating muscle tissues may include one or more surgical incisions to sever targeted muscle tissue.

In another embodiment, the tissue of the nasal valve may be reshaped by applying energy to the internal and external walls of the nasal valve using a clamp like device as illustrated for example in FIGS. **5**A and **5**B. One arm of the clamp may provide inward pressure to the external, skin side tissue covering the nasal valve and the other side of the clamp may provide outward pressure to the mucosal tissue on the lateral wall of the nasal airway above the ULC and LLC or both.

In some embodiments, energy may be applied to the skin of the nose to effect a shrinkage of the skin, epidermis, dermis, subdermal, subcutaneous, tendon, ligament, muscle, and/or cartilage tissue. The tissue shrinkage is intended to result in a change of forces acting on the tissues of the nasal valve to improve airflow through the nasal airway.

In another embodiment, the nasal valve tissue may be damaged or stimulated by energy application, incisions, injections, compression, or other mechanical or chemical actions. Following such damage, a device may be used on the tissue to mold or shape the tissue of the valve during healing. In some embodiments, such a re-shaping device may be temporarily placed or implanted inside or outside the patient's nose to hold a desired shape while the patient's healing process progresses.

In another embodiment, the aesthetic appearance of the nose may be adjusted by varying the device design and/or treatment procedure. The predicted post-procedure appearance of the nose may be shown to the patient through manipulating the nasal tissue to give a post procedure appearance approximation. The patient may then decide if the predicted post procedure appearance of the face and nose is acceptable or if the physician needs to change parameters of the device or procedure to produce an appearance more acceptable to the patient.

In another embodiment, reduction of the negative pressure in the nasal airway can be effected to reduce collapse of the structures of the nasal airway on inspiration without changing a shape of the nasal valve. For example, this may be accomplished by creating an air passage that allows flow of air directly into the site of negative pressure. One example of this is creating a hole through the lateral wall of the nose allowing airflow from the exterior of the nose through the nasal wall and into the nasal airway.

In another embodiment, energy, mechanical or chemical therapy may be applied to the tissue of the nasal airway with the express purpose of changing the properties of the extracellular matrix components to achieve a desired effect without damaging the chondrocytes or other cells of the nasal airway tissue.

In some embodiments, devices (e.g., devices like those described with respect to FIGS. **9**A-**21**B) may be used to provide tissue re-shaping/molding and to impart energy to the nasal valve. The electrode may be placed in contact with the target nasal valve tissue. The electrodes and molds may be moved to shape the tissue as necessary to achieve improvement in nasal airway. The electrodes may be activated while the tissue is deformed in the new shape to treat the tissue. The electrode may then be deactivated and the device may be removed from the nasal valve area.

FIGS. **30**A-**30**D depict a method for using a device **800** similar to those devices described above, including but not limited to FIGS. **8**A, **9**B, **18**, **22**A-G, and **23**A-G, to provide tissue re-shaping/molding and to impart energy to tissue near the nasal valve.

The method may include identifying a patient who desires to improve the airflow through their nasal passageways and/or who may benefit from an increase in a cross-sectional area of the opening of the nasal valve. The patient may be positioned either in an upright position (e.g., seated or standing) or be lying down. Local anesthesia may be applied to an area near or surrounding the tissue to be treated. General anesthesia may also be used.

Optionally, a positioning element, like that described herein, may be used to measure a desired depth or angle of treatment. As described above, the positioning element may be inserted to the desired depth of treatment and rotated to a desired angle of treatment. Marks along the positioning element can indicate the desired depth. Marks along the base of the shaft of the positioning element can indicate the desired angle. The physician or other medical professional administering the treatment can then insert the treatment device to the desired location. The physician may also assess any other characteristics relevant to the treatment of the patient's nose that may influence the manner of treatment. In some embodiments, a re-shaping element may be used to manipulate the nasal tissue into a configuration allowing improved airflow; and treatment may be performed while such a re-shaping element is maintaining the desired configuration of the nasal tissue.

If the treatment device comprises a monopolar electrode or electrode needles, a ground pad may be attached to the patient. The ground pad may be attached at the patient's torso, for example the shoulder or abdomen. Other locations are also possible, such as the patient's buttocks. Preferably, the point of attachment is a large, fleshy area. After being attached, the ground pad may be plugged into a power source. If the device is powered by a remote generator (e.g., RF generator), the device may then be plugged into the generator.

FIG. **30**A depicts the nose of a patient prior to insertion of the device. As shown in FIG. **30**B, the device is then inserted into a nostril of the patient. The treatment element **802** of the device **800** may be positioned within the nasal airway, adjacent to nasal tissue (e.g., upper lateral cartilage) to be treated. The treatment element **802** may be positioned so that the electrode is in contact with the tissue to be treated. The device **800** (as shown in FIG. **30**C) comprises multiple

needle electrodes **804**. The needle electrodes **804** may be inserted so that they are penetrating or engaging tissue to be treated.

The treatment element **802** may be used to deform the nasal tissue into a desired shape by pressing a convex surface of the treatment element **802** against the nasal tissue to be treated. FIG. **30**C shows an internal view, from the nares, of the treatment element **802** pushing against the upper lateral cartilage **806** of the nose, deforming the upper lateral cartilage **806** and increasing the area of the opening of the nasal valve **808**. FIG. **30**D depicts an external view of the treatment element **802** deforming the upper lateral cartilage **806**. Even from the outside, the nose appears to be bulging near the area to be treated. In some embodiments, the deformation required to treat the nose is not visually detectable. A control input such as button **814** may be used to activate the electrode and deliver energy (e.g., RF energy) to the tissue to be treated.

In some embodiments, temperature of the area around the electrode during treating is from about 30 degrees Celsius to about 90 degrees Celsius. In some embodiments, temperature of the area around the electrode during treating is from about 40 degrees Celsius to about 80 degrees Celsius. In some embodiments, temperature of the area around the electrode during treating is from about 50 degrees Celsius to about 70 degrees Celsius. In some embodiments, temperature of the area around the electrode during treating is about 60 degrees Celsius. In some embodiments, for example during cryo-therapy, temperature of the area around the electrode may be lower.

In some embodiments, the target tissue is treated for about 3 minutes. In some embodiments, the target tissue is treated for about 10 seconds to about 2 minutes. In some embodiments, the target tissue is treated for about 15 seconds to about 1 minute. In some embodiments, the target tissue is treated for about 20 seconds to about 45 seconds. In some embodiments, the target tissue is treated for about 30 seconds.

In some embodiments, treating the target tissue comprises delivering between about 1 and about 100 watts to the tissue. In some embodiments, treating the target tissue comprises delivering between about 5 and about 75 watts to the tissue. In some embodiments, treating the target tissue comprises delivering between about 10 and about 50 watts to the tissue.

As shown in FIGS. **30**B and **30**D, a thermocouple **812** may be provided on the electrode (e.g., as described with reference to FIGS. **22**G and **27**). In some embodiments, more than one thermocouple may be provided. For example, in embodiments comprising more than one electrode or electrode pair, each electrode or electrode pair may comprise a thermocouple. The thermocouple **812** may monitor temperature of the electrode and provide feedback to a control unit (e.g., control system **42** described with respect to FIG. **3**). The control unit may use the data from the thermocouple **812** to regulate temperature and auto-shutoff once treatment has been achieved or in the case of an overly high temperature.

After treating the tissue, the device **800** may be removed from the nostril. If a grounding pad is used, the grounding pad may be detached from the patient.

In some embodiments, differential cooling mechanisms may be used to treat the nasal valve using electrodes or other energy delivery elements while maintaining a reduced temperature at the skin and/or mucosa. For example, devices like those described with respect to FIGS. **25**A-**27** or devices employing the differential cooling mechanisms described with respect to FIGS. **28**A-**28**E may be used. The cooling system may be activated. The device may then be inserted into the nose and placed in contact with the nasal vale. The device may then be activated. Activation of the device may cause an increase in the cartilage temperature while minimizing the temperature increase in the skin and/or mucosa. The device may then be deactivated and removed from the nose.

In some embodiments, devices may be used in which insulating material is used to protect non-target tissue during energy delivery. In an embodiment, a device comprises an electrode needle preferentially insulated on a portion of the needle. The needle may be inserted into the cartilage so that the insulated portion is in contact with the mucosa and/or the skin and the non-insulated portion is in contact with the cartilage. The device may be activated, causing an increase in the cartilage temperature while minimizing temperature increase in the skin and/or mucosa. The device may be deactivated and removed from the nose.

Additional Embodiments and Optional Features

Referring now to FIGS. **31**A and **31**B, in one embodiment, a device **900** for treating a nasal valve may include an internal power source and thus be cordless. In the embodiment shown, the device **900** includes a handle **902** coupled with a shaft **904**, which in turn is coupled with a treatment element **908**. The handle **902** may include a power button **910** (or "on/off switch"), a circuit board (**912**, FIG. **31**B) and a space and connections for insertion of batteries **914** as a power source. Treatment element **904** may include multiple needle electrodes **906** for applying RF energy to tissue.

Any suitable features, elements, materials or the like that have been described above may be applied to the device **900** in a similar way. In various alternative embodiments, the device **900** may include any number, size or type of batteries, depending on the size of the handle **902** and power requirements of the device **900**. In some alternative embodiments, the device **900** may include an alternative power source. For example, the batteries **914** may be rechargeable in some embodiments. In other embodiments, it may be possible to plug the device **900** into a power generator for charging, and then unplug the device **900** for use. In yet other alternative embodiments, the device **900** may include a solar power collection member. The advantage of including an internal power source in the device **900** is that this eliminates the need for the device **900** to be connected, via power cord, to a large, table-top generator, as most energy delivery surgical/medical devices require. This allows a physician to perform a nasal valve procedure in any location or patient orientation without having to manage power cables and generators.

Referring now to FIGS. **32**A and **32**B, in some embodiments, a system for treating a nasal valve may include one or more sensors. Such sensors may be used to sense any of a number of relevant tissue properties, such as temperature, impedance and the like. The sensors may be located on a treatment device in some embodiments, or alternatively they may be separate from the treatment device and positioned at or near the device during treatment. In some embodiments, the sensor(s) may provide feedback directly to the treatment device. For example if a particular tissue temperature threshold is reached, a sensor (or sensors) may send a signal to a power generator to shut down or decrease power delivered to a treatment device. In alternative embodiment, the sensor(s) may instead provide feedback to a physician or other user, so that the physician or other user can make treatment adjustments. For example, sensors may provide a warning signal when a particular tissue temperature or impedance is reached, which will help a physician know

when to turn off or decrease power delivery to a treatment device. Additionally, sensor(s) may be used to sense one or more tissue properties in any suitable tissue or multiple tissues, such as but not limited to mucosa, cartilage, dermis, epidermis and other types of body soft tissue.

FIG. **32**A illustrates nasal skin in cross section, including mucosa, cartilage, dermis and epidermis. In one embodiment, a sensor device **920** may include an epidermal sensor **922** that is coupled to the epidermis via an adhesive **924**. Any suitable sensor **922** (temperature, impedance, etc.) and any suitable adhesive **924** may be used. This embodiment of the sensor device **920** is also illustrated on a patient's face in FIG. **32**B.

In an alternative embodiment, a sensor device **930** may include a transdermal needle sensor **932**. In another alternative embodiment, a sensor device **942** may be attached directly to a treatment device **940**. As illustrated by these various embodiments, sensors **922**, **932** and **942** may be positioned either at or near a treatment location during a treatment. In some embodiments, for example, a sensor **922**, **932** may be placed on or in epidermis while a treatment is being performed on mucosa. Alternatively, a sensor **942** may be placed directly on mucosa during a treatment of mucosa. Additionally, in any given embodiment, multiple sensors may be placed at multiple different locations in and/or on tissue. As mentioned above, the sensor devices **920**, **930** and **940** may, in various embodiments, provide any of a number of different types of feedback, such as feedback to a user, feedback to a power generator, or both.

Referring now to FIGS. **33**A and **33**B, in some embodiments, a treatment device **950** may include a treatment element **952** with wings **954** extending laterally from it. The wings **954** are configured to help direct the treatment element **952** into a particular treatment location/position and/or to prevent the treatment element **952** from contacting tissue that the physician does not want to treat. For example, FIG. **33**B illustrates a top, cross-sectional view of a nose N, showing the lateral wall LW, nasal septum S and an intersection I between the lateral wall LW and nasal septum S. In many or most cases, it may be undesirable to treat mucosa at the intersection I with RF energy or other energy delivery or removal devices. The wings **954** will help prevent the treatment element **952** from being advanced far enough toward the intersection I to actually contact and treat that mucosa. Alternative embodiments may include additional wings or other protrusions or shapes to prevent contact with the intersection I and/or other structures. Some embodiments may include adjustable wings or wings that expand once the electrodes have been placed. Any other size, shape or configuration of one of more wings may be included, according to various embodiments.

Referring to FIGS. **34**A-**34**C, in various alternative embodiments, treatment elements of nasal valve treatment devices may have different shapes and/or sizes for addressing different types and/or shapes of tissue. For example, as shown in FIG. **34**A, in one embodiment, a treatment element **960** of a device may have a square or rectangular profile with a flat distal end, which may be ideal for addressing relatively flat tissue configurations. Two electrodes **962** (or two sets of electrodes) may be used to send an arc of current (e.g., RF current) through tissue in the pattern shown by the multi-headed arrow.

In another embodiment, as shown in FIG. **34**B, a treatment element **970** may have an oval profile with a curved distal end. Two electrodes **972** or sets of electrodes send a current through tissue in an arc. This configuration may be advantageous for addressing tissue having a curved profile. In yet another embodiment, as shown in FIG. **34**C, a treatment element **980** may have a flatter curved profile, for example for addressing tissue with a curved shape but not as sharp of an angle as the tissue shown in FIG. **34**B. Again, the electrodes **982** send energy through the curved tissue in a curved arc.

As is evident from FIGS. **34**A-**34**C, a treatment element of a treatment device may have any suitable configuration for advantageously addressing any tissue type and shape. In some embodiments, multiple different treatment devices, each having a differently shaped treatment element, may be provided, and a user may select a treatment device for a particular tissue type and/or shape, based at least in part on the shape of the treatment element of the device.

Referring to FIG. **35**, in another embodiment, a treatment device **1000** for treating a nasal valve and/or tissues near the nasal valve may include an expandable member **1002**, such as but not limited to an expandable polymeric balloon. For example, a non-compliant or semi-compliant balloon may be used in some embodiments to expand tissues in and/or around the nasal valve, to achieve one or more of the effects discussed above in relation to the various embodiments. Although expandable balloon devices (e.g., balloon catheters) have been described previously for use in expanding ostia (openings) of the sinus cavities, they have not been described for use in changing the shape and/or physical characteristics of the nasal valve. In various method embodiments, the expandable member **1002** may be positioned at any of a number of suitable locations at or near a nasal valve and then expanded to deform tissues that make up the nasal valve. In some cases, these tissues may be at least partially deformed permanently or at least for a period of time after the procedure. In other cases, the tissue may only be deformed during the procedure, but one or more properties of the tissue may be affected by the balloon expansion.

In various alternative embodiments, a treatment device for nasal valve tissue and/or other nasal tissue may use a treatment modality that does not involve delivery of energy to, or removal of energy from, tissue. For example, in some embodiments, the treatment device may create some kind of mechanical injury to one or more tissues to cause a change in shape and/or one or more properties of the tissue. The expandable balloon embodiment described above is one example. Other examples may include, but are not limited to, needles, micro-needles, blades or the like, any of which may be used to cause scar tissue formation and/or tissue contraction. Other embodiments may use sclerotherapy, involving injecting one or more substances (acid, coagulants, etc.) into the target tissue to induce scar tissue formation and/or other changes in the tissue properties. In some cases, one type of tissue (for example, mucosa) may be transformed into a different type of tissue altogether (for example, scar tissue). In other examples, a one or more properties of the tissue may be changed without changing the overall type of tissue. For example, the tissue may be caused to shrink, contract, stiffen and/or the like. One advantage of these non-energy-based embodiments is that they do not require a source of energy. This may make them easier to use and possibly to manufacture and supply.

In other embodiments, thermal energy may be applied to the nasal valve by applying the energy from an external location on the nose, rather than an internal location within the nasal cavity. For example, in some embodiments, a treatment device may be positioned on the nose and used to deliver thermal energy through the epidermis to the deep subdermal and/or dermal layer above the nasal valve. In some embodiments, the treatment device may also be used

to cool the superficial dermis and epidermis, for example. This delivery of energy could, in some embodiments, act to tighten tissues of the nasal valve, thus preventing collapse during breathing. In an alternative embodiment, instead of using thermal energy to change the tissues, a treatment device may use mechanical means, such as micro-needles, to create a subdermal tissue response, such as scarring, for a similar type of tissue tightening effect.

In yet other embodiments, some methods for treating a nasal valve may include applying a gel, paste, liquid or similar substance to a surface of the nose during an energy delivery treatment of the nasal valve. Such substances may be applied to target tissue, such as mucosa, non-target tissue, such as epidermis, or a combination of both. The substance (or substances) applied may serve any of a number of different purposes, such as but not limited to modifying conductivity of tissue and providing anesthetic effect. Conductivity enhancing substances may improve the efficiency and/or consistency of energy delivery (such as but not limited to RF energy). Alternatively or additionally, one or more substances may be injected into tissue. For example, saline, Lidocaine, other anesthetic agents, or any other suitable agents, may be injected. Some embodiments may involve applying one substance and injecting another sub stance.

In other alternative embodiments, it may be possible to achieve desired changes in tissue properties and/or shapes by injecting substance or applying substance only—in other words, without also applying energy. For example, injecting a sclerotherapy substance into tissue may, in some embodiments, achieve a desired tissue result. In additional alternative embodiments, a method of treating a nasal valve may include injecting a substance into nasal tissue and then curing the substance in order to change the substance's properties and, in turn, at least one of the nasal tissue's properties. A treatment device may be used to cure the substance. In some embodiments, the treatment device may be used to deform the target tissue and cure the substance, while the tissue is deformed, so that the tissue retains approximately the same, deformed shape after the substance is cured and the treatment device is removed. In another alternative embodiment, a surface-based biodegradable agent may be applied and cured to change the shape of the target nasal tissue.

Referring now to FIG. **36**, any of the embodiments discussed above may be used to treat tissue that is considered part of the nasal valve, tissue that is immediately adjacent or near nasal valve tissue, tissue farther away from the nasal valve that affects nasal valve function, or some combination thereof. FIG. **36** is a diagrammatic illustration of the internal nasal valve. As mentioned previously, the internal nasal valve, which accounts for the larger part of the nasal resistance, is formed by the nasal septum S, the caudal border of the upper lateral cartilage (ULC), the head of the inferior turbinate, and the pyriform aperture P and the tissues that surround it. In FIG. **36**, the triangular representation is comprised of the septum S, the pyrifom aperture P, and the lateral wall LW. According to various embodiments, any area within the triangle, immediately outside the triangle, or even more distant from the triangle, may be treated, in order to affect function of the nasal valve. In one embodiment, for example, a treatment area **1010** may be located at a juncture of the pyriform aperture P and the lateral wall LW, and in various embodiments the treatment area **1010** may be located entirely within the triangle or may extend outside of it. This is but one example of an area that may be treated, according to various embodiments.

One mechanism of action that may be involved in any of the embodiments described above may be to reduce mucus production and/or accumulation in and/or around any treated areas. Although emphasis has been placed on structure and function of the nasal valve in much of the foregoing description, mucus reduction may also be part the beneficial result of any treatment, in some embodiments.

Although this invention has been disclosed in the context of certain preferred embodiments and examples, it will be understood by those skilled in the art that the present invention extends beyond the specifically disclosed embodiments to other alternative embodiments and/or uses of the invention and obvious modifications and equivalents thereof. Thus, it is intended that the scope of the present invention herein disclosed should not be limited by the particular disclosed embodiments described above, but should be determined only by a fair reading of the claims that follow.

What is claimed is:

1. A method for treating a nasal airway to reduce mucus production, the method comprising:

contacting a treatment element of a nasal airway treatment device directly with nasal mucosa of the nasal airway, wherein the treatment element comprises two rows of bipolar electrode pairs;

applying radiofrequency energy with the bipolar electrode pairs through the nasal mucosa to a target tissue underlying the nasal mucosa for an amount of time to heat the target tissue; and

removing the treatment element from the nasal airway,

wherein heating the target tissue with the applied radiofrequency energy modifies at least one property of the target tissue, and

wherein the modified at least one property of the target tissue causes a reduction in mucus production in the nasal airway.

2. The method of claim **1**, wherein the target tissue is selected from the group consisting of mucosa, submucosa, cartilage, muscle, ligament, and tendon.

3. The method of claim **1**, further comprising controlling at least one characteristic of the applied radiofrequency energy with a control system coupled with the nasal airway treatment device.

4. The method of claim **1**, wherein the radiofrequency energy is applied in the form of a 460 kHz sinusoid wave.

5. The method of claim **1**, further comprising:

sensing a temperature of the nasal mucosa using a thermocouple positioned between the two rows of bipolar electrode pairs on the treatment element; and

modifying an amount of the radiofrequency energy applied to the target tissue based on the sensed temperature.

6. The method of claim **1**, further comprising displaying one or more parameters of treatment on a console attached to the nasal airway treatment device while the radiofrequency energy is applied, the one or more parameters selected from the group consisting of treatment time, power level, temperature sensed by the treatment element, electric impedance, electric current, and depth of treatment.

7. The method of claim **1**, further comprising applying local anesthesia to at least one of the nasal mucosa or the target tissue before applying the radiofrequency energy.

8. The method of claim **1**, wherein the radiofrequency energy is produced by a radiofrequency energy source configured to run between 1 Watt and 100 Watts.

9. The method of claim **1**, wherein applying the radiofrequency energy comprises heating the target tissue to a temperature between 50 degrees Celsius to 70 degrees Celsius.

10. The method of claim **1**, wherein the amount of time the radiofrequency energy is applied to the target tissue is between fifteen seconds and one minute.

11. The method of claim **1**, further comprising, before removing the treatment element from the nasal airway:

repositioning the treatment element to contact a different portion of nasal mucosa; and

applying radiofrequency energy with the bipolar electrode pairs through the different portion of nasal mucosa to a different portion of target tissue for the amount of time to heat the different portion of target tissue.

12. The method of claim **1**, wherein the modified at least one property of the target tissue is selected from the group consisting of shrinking, tightening, stiffening, and deactivating the target tissue.

13. The method of claim **1**, further comprising repositioning, remodeling, or reshaping the target tissue with the treatment element, wherein the target tissue remains at least partially repositioned, remodeled or reshaped after the target tissue heals.

14. The method of claim **1**, wherein applying the radiofrequency energy heats the target tissue to a sub-ablative temperature.

15. The method of claim **1**, further comprising applying a conductivity enhancing substance to the nasal mucosa before contacting the treatment element with the nasal mucosa.

16. The method of claim **1**, further comprising bending a shaft of the nasal airway treatment device before contacting the treatment element with the nasal mucosa.

* * * * *