UNITED STATES PATENT AND TRADEMARK OFFICE

BEFORE THE PATENT TRIAL AND APPEAL BOARD

NEURENT MEDICAL INC. & NEURENT MEDICAL LTD.
Petitioners,

v.

THE FOUNDRY, LLC
Patent Owner.

U.S. Patent No. 10,610,675

Case No.: IPR2024-00279

DECLARATION OF DR. HOWARD L. LEVINE, M.D., IN SUPPORT OF PATENT OWNER'S RESPONSE

TABLE OF CONTENTS

I. Introduction....1
II. Qualifications....2
A. Treatment Using RF Energy and Lasers....4
B. Prior Testimony....5
III. Legal Standards....6
A. Anticipation....6
B. Obviousness....7
C. Written Description....9
IV. Materials Reviewed....9
V. General overview....10
A. Overview of the ’675 Patent....10
B. Prosecution History of the ’675 Patent....12
C. Priority Date of the ’675 patent....13
D. Challenged Claim Overview....13
E. Claim Construction....14
VI. Person of Ordinary Skill in the Art (“POSITA”)....14
VII. Nasal Anatomy and Physiology....19
VIII. Treatment of Mechanical Obstructions....27
IX. The Specification of the ’675 Patent Supports The use of Energy alone to Reduce Mucus Secretion and/or Congestion....30
X. A POSITA Would Not Have Combined the Teachings of Makower and Fang....35
A. Fang’s Findings Are Inconclusive....37
B. Makower Is Focused On Flexible Catheters....42
C. A POSITA Would Not Have Been Motivated To Combine Makower With Fang....48
D. A POSITA Would Not Have Been Motivated To Use Makower’s Device To Treat Perennial Allergic Rhinitis....49
E. A POSITA Would Not Have Had a Reasonable Expectation of Success with Makower’s FIG. 5H Device....55

The Foundry, LLC Exhibit 2003, Page 2 of 65
Neurent Medical Inc. & Neurent Medical Ltd. v. The Foundry, LLC
IPR2024-00279

XI. Makower's Device Does Not "Concentrate Energy Laterally" as per Claim 22 56
XII. Declaration In Lieu Of Oath 60

The Foundry, LLC Exhibit 2003, Page 3 of 65
Neurent Medical Inc. & Neurent Medical Ltd. v. The Foundry, LLC
IPR2024-00279

EXHIBIT LIST

Exhibit	Description
1001	U.S. Patent No. 8,933,321
1002	Declaration of Dr. Nicolas Bu-Saba
1005	U.S. Patent Pub. No. 2005/0240147 to Makower
1006	Fang Chao-xin and Zhen Shao-Shao, Nasal endoscopy combined with multiple radiofrequency for perennial allergic rhinitis, 25(07) J. First Mil. Medic Univ. 876 (July 20, 2005) (Translation) ("Fang")
1008	U.S. Patent No. 6,517,535 to Edwards
1009	U.S. Patent No. 5,562,720 to Stern
1010	U.S. Provisional Appl. No. 60/702,077
1011	U.S. Provisional Appl. No. 60/747,771
1012	U.S. Patent No. 7,608,275
1013	U.S. Patent No. 8,133,497
1014	U.S. Patent No. 8,338,164
1015	U.S. Patent No. 8,961,391
1016	U.S. Patent No. 9,498,283
1017	U.S. Patent No. 10,022,529
1022	Prosecution History for U.S. Patent No. 10,610,675
1043	Kong Yonggang, *Low-temperature plasma ablation of inferior turbinate for the treatment of perennial allergic rhinitis*, 19(5) J Clin. Otorhinolaryngol 214 (Mar. 2005) (Translation) ("Kong")
1044	1044. Chen Shi-qiang et al., *Preliminary study on radiofrequency thermocoagulation of the posterior inferior nerve, anterior ethmoidal nerve, and inferior turbinate under nasal endoscopy for the treatment of perennial allergic rhinitis*, 11(3) China Journal of Endoscopy 239 (Mar. 2005) (Translation) ("Chen")
1045	1045. Liang Jianping, *Radiofrequency treatment of ethmoidal nerve with allergic rhinitis under nasal endoscopy*, 13(8) J Clin. Otorhinolaryngol 341 (Aug. 1999) (Translation) ("Liang")
1064	Andrew Lane, *Nasal anatomy and physiology*, Facial Plast. Surg. Clin. N. Am. 12:387-395 (2004)
1068	U.S. Patent No. 5,255,679 to Imran
2001	Lewis, David, and Nicolas Y. Busaba. "Surgical Management." Sinusitis. CRC Press, 2006. 233-268.
2002	October 17, 2024 deposition transcript of Dr. Nicolas Bu-Saba
2003	[N/A – This Declaration]

The Foundry, LLC Exhibit 2003, Page 4 of 65
Neurent Medical Inc. & Neurent Medical Ltd. v. The Foundry, LLC
IPR2024-00279

Exhibit	Description
2004	CV of Dr. Howard L. Levine
2005	Declaration of Dr. Marom Bikson
2006	CV of Dr. Marom Bikson
2007	Brook, Itzhak. "*Sinusitis: From Microbiology To Management*" 2006

The Foundry, LLC Exhibit 2003, Page 5 of 65
Neurent Medical Inc. & Neurent Medical Ltd. v. The Foundry, LLC
IPR2024-00279

I. INTRODUCTION

1. My name is Howard L. Levine. I have been retained as an expert by The Foundry, LLC ("Foundry") to provide my analysis and conclusions relating to three *inter partes* review ("IPR") petitions filed by Neurent Medical Inc. & Neurent Medical Ltd. ("Petitioners") against three patents owned by Foundry. The matters at issue are identified below:

- IPR2024-00279 regarding U.S. Patent No. 10,610,647 (the "'675 patent");
- IPR2024-00280 regarding U.S. Patent No. 10,894,011 ("the '011 patent"); and
- IPR2024-00669 regarding U.S. Patent No. 11,679,077 ("the '077 patent").

While this Declaration focuses on the '675 patent IPR, I am submitting similar declarations in the IPRs to the '011 and '077 patents.

2. For the '675 patent, I understand that Petitioners have challenged the patentability of claims 1-3, 7, 9-10, and 17-25 (collectively, the "Challenged Claims") of the '675 patent across four proposed invalidity "grounds." Counsel for Foundry has asked me to opine on Ground 4 in which Petitioners assert the prior art of Makower (Ex-1005) and Fang (Ex-1006) makes obvious all Challenged Claims. For the reasons stated herein, I disagree that the Challenged Claims would have been

obvious based on the combination of Makower and Fang.

3. I have also been asked to opine on the written description support in the ’675 patent as it relates to the use of non-reversible (ablative) energy to treat tissue resulting in the reduction of mucus secretion and/or congestion in the nasopharyngeal passage. For the reasons stated herein, the specification of the ’675 patent conveys with reasonable clarity to persons skilled in the art that the inventors of the ’675 patent possessed the use of non-reversible energy treatments resulting in the reduction of mucus secretion and/or congestion in the nasopharyngeal passage.

4. I am being compensated for my work in this matter at my normal hourly rate. My compensation is not contingent on the outcome of this proceeding. I have no financial interest in The Foundry, LLC or its licensee, Aerin Medical Inc.

II. QUALIFICATIONS

5. I received a Bachelor of Arts (BA) from the University of Pennsylvania in 1966 and a Doctor of Medicine (MD) from Northwestern University in 1970.

6. I subsequently completed two surgical residencies at the University Hospitals of Cleveland before completing a three-year Otolaryngology Residency (Otolaryngology and Head and Neck Surgery) at the hospitals of Northwestern University. I became Board-certified in Otolaryngology in 1975.

7. Since 1975, I have held various professional appointments as detailed in my Curriculum Vitae (CV), which I have attached as **Exhibit 2004**. Since I

completed my residencies, my main clinical focus has been on head, neck, nasal, and sinus disorders. In addition to working for over 40 years as an ear, nose, and throat (ENT) surgeon, I was the Section Head of Nasal and Sinus Disorders at the Cleveland Clinic Foundation from 1975-1991. I spent a decade as the Chief Nasal and Sinus surgeon at the Mt. Sinai Medical Center in Cleveland, Ohio (affiliated with Case Western University), which I completed in 2000 until it closed. From 1991-to the present I have held an adjunct position in the Cleveland Clinic Head and Neck Institute.

8. In addition to my professional appointments, I have worked in private practice as the Director of the Cleveland Nasal Sinus & Sleep Center since 1991 where I continue to see patients.

9. From 2005 until 2010, I worked as a consultant at Acclarent (which was purchased by Johnson & Johnson in 2010) and participated in the scientific advisory board, worked with research and product development, and was involved in worldwide education regarding balloon sinuplasty, and in research and clinical publications. From July of 2010 until November 2016, I worked as the Vice President of Medical Affairs at Johnson & Johnson in the Acclarent company. As the VP of Medical Affairs at Acclarent, I was involved in quality engineering, complaint handling, research and product development, clinical trials, and strategic marketing representing the voice of the customer. I am no longer affiliated with

Acclarent or Johnson & Johnson and have not been for years.

10. Since 2007, I have also worked as the Medical Director for Rhinosystems, Inc. (RSI) in Brooklyn, Ohio. Among other things, RSI develops, manufactures and distributes the Navage Nasal Hygiene System, the world's first handheld nasal irrigator that uses gentle suction.

11. Since leaving Acclarent, I have also worked as a medical consultant in the specialty area of nasal, sinus, and throat disorders. One of my consulting clients was Entellus, which is a direct competitor of Acclarent in the manufacture and sale of devices used in balloon sinuplasty procedures. Entellus was purchased by Stryker Medical. In addition, I have consulted for Meril Life, a company based in Vapi, India, that manufactures and distributes a balloon sinuplasty device in over 17 countries. I am also a senior medical advisor for Dianosic (Paris, France) looking at intranasal drug delivery for allergic rhinitis and chronic rhinosinusitis.

A. Treatment Using RF Energy and Lasers

12. Over the course of my career, I have used radiofrequency ("RF") energy in my daily practice for the management of nasal obstructions and in the oral cavity for snoring an sleep apnea. I note that Dr. Nicholas Bu-Saba and I have both used Somnoplasty™ devices in our clinical practices, which involves the application of RF energy for treating, for instance, sleep apnea and nasal obstruction. I have performed thousands of procedures using Somnoplasty™ devices (Sunnyvale,

California). I was also a spokesperson for Somnus and I also taught other professionals how to use the Somnoplasty device.

13. In the 1990's, I helped design and develop handpieces to accept flexible laser fibers (shown below) for use in nasal ablation procedures. The device is described in the article "*Lasers in endonasal surgery,*" Otolaryngol Clin North Am 1997, 30:451–455. (*See also* Ex-2001 at 268 (Dr. Bu-Saba's chapter in the book "*Sinusitis*" referencing the above paper).)

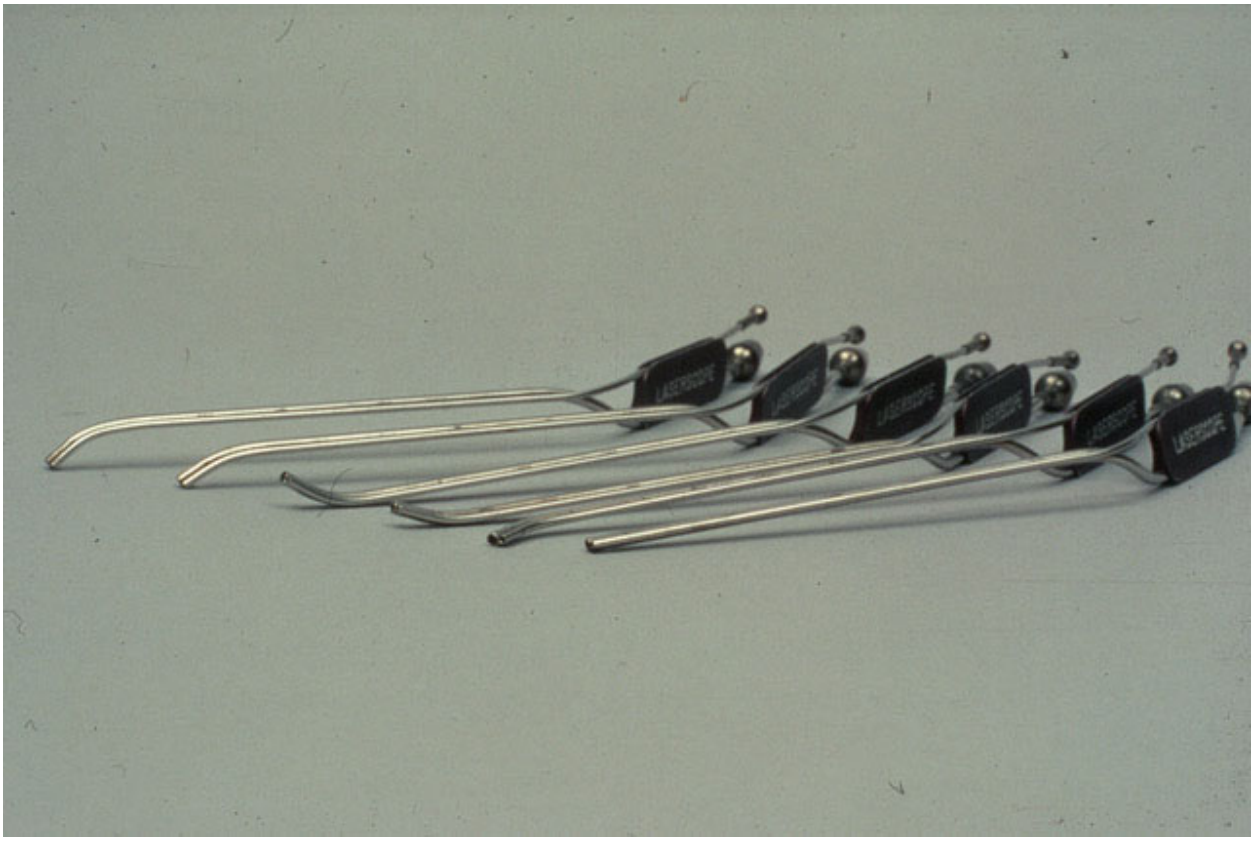

B. Prior Testimony

14. I have provided testimony in connection with the below two IPRs:

- *Acclarent, Inc. v. Ford Albritton, IV*, IPR2017-00498, U.S. Patent No.

9,011,412; and

- *Acclarent, Inc. v. Ford Albritton, IV*, IPR2018-00268, U.S. Patent No. 9,011,412.

15. I have also provided testimony before the Department of Justice in *United States v. Facteau*, Case No. 1:15-cr-10076-ADB (D. Mass) with respect to a non-patent case concerning off-label use of a drug and device. I have not provided other testimony before a tribunal in the last seven years.

III. LEGAL STANDARDS

16. I am not an attorney and offer no legal opinions. For the purposes of this declaration, I have been informed about certain aspects of the law that are relevant to my analysis, as summarized below.

17. I understand that, in an *inter partes* review proceeding, patent claims may be deemed unpatentable if it is shown that they were anticipated by a single patent or printed publication or rendered obvious by one or more prior art patents or printed publications. I understand that invalidity in an *inter partes* review proceeding is evaluated using a preponderance of the evidence standard, which means that the facts must show a claim is more likely than not to be unpatentable.

A. Anticipation

18. I understand that a patent claim may be invalid as "anticipated" if each and every feature of the claim is found, expressly or inherently, in a single item of

prior art, such as in a single prior art patent or printed publication. In determining whether the single item of prior art anticipates the claim, one considers not only what is expressly/implicitly disclosed in the particular item of prior art, but also what is inherently present or disclosed in that prior art or what inherently results from its practice.

B. Obviousness

19. I understand that a claim may be invalid if the subject matter described by the claim as a whole would have been obvious to a POSITA in view of a prior art reference, or in view of a combination of references at the time the claimed invention was made. Therefore, I understand that obviousness is determined from the perspective of a POSITA, and that the asserted claims of the patent should be read from the point of view of such a person at the time the claimed invention was made.

20. I also understand that an analysis of whether a claimed invention would have been obvious should be considered in light of the scope and content of the prior art, the differences (if any) between the prior art and the claimed invention, and the level of ordinary skill in the pertinent art involved. I understand as well that a prior art reference should be viewed as a whole. I understand that in considering whether an invention for a claimed combination would have been obvious, I may assess whether there are apparent reasons to combine known elements in the prior art in the manner claimed in view of interrelated teachings of multiple prior art references, the

effects of demands known to the design community or present in the marketplace, and/or the background knowledge possessed by a POSITA. I also understand that other principles may be relied on in evaluating whether a claimed invention would have been obvious, and that these principles include the following:

- A combination of familiar elements according to known methods is likely to be obvious when it does no more than yield predictable results;
- When a device or technology is available in one field of endeavor, design incentives and other market forces can prompt variations of it, either in the same field or in a different one, so that if a POSITA can implement a predictable variation, the variation is likely obvious;
- If a technique has been used to improve one device, and a POSITA would have recognized that it would improve similar devices in the same way, using the technique is obvious unless its actual application is beyond his or her skill;
- An explicit or implicit teaching, suggestion, or motivation to combine two prior art references to form the claimed combination may demonstrate obviousness, but proof of obviousness does not depend on or require showing a teaching, suggestion, or motivation to combine;
- Market demand, rather than scientific literature, can drive design trends and may show obviousness;

- One of the ways in which a patent's subject can be proved obvious is by noting that there existed at the time of invention a known problem for which there was an obvious solution encompassed by the patent's claims;
- Any need or problem known in the field of endeavor at the time of invention and addressed by the patent can provide a reason for combining the elements in the manner claimed; and
- One should be cautious of using hindsight in evaluating whether a claimed invention would have been obvious.

C. Written Description

21. I understand the specification of a patent shall contain a written description of the invention, and of the manner and process of making and using it, in such full, clear, concise, and exact terms as to enable any person skilled in the art to which it pertains, or with which it is most nearly connected, to make and use the same. I understand that to satisfy the written description requirement the specification must convey with reasonable clarity to those skilled in the art that, as of the filing date sought, the inventor(s) was/were in possession of the invention. I also understand that the disclosure as originally filed does not have to provide *in haec verba* support for the claimed subject matter at issue.

IV. MATERIALS REVIEWED

22. In forming my opinions, I have reviewed the materials cited in this

declaration and the exhibit list above.

V. GENERAL OVERVIEW

A. Overview of the ’675 Patent

23. The ’675 patent relates to methods and apparatuses “for the control of autonomic nerve function” of target cells in the nasal passageway. (Ex. 1001, 1:33-42.) Generally, to do so, an active fragment (sometimes referred to as a catalytic portion) of a neurotoxin such as the botulinum neurotoxin (BoNT), preferably the light chain (LC) portion of BoNT, is delivered to target cells via cell membrane permeabilization. (Ex. 1001 at 4:52-58.)

24. First, an apparatus uses “an electric field or ultrasonic energy generated by a pulse or pulses of a designated duration and amplitude to alter tissue at the cellular level via permeabilization of the cell membrane.” (Ex. 1001, 4:52-58.) In other words, energy is delivered to the tissue. While many embodiments of the ’675 patent disclose energy delivery to achieve reversible poration, the ’675 patent specifically states that the energy delivery may be reversible or *non-reversible*. (Ex. 1001, 8:4-12.) Further, “the energy may be applied to regions of the nasal membrane which are the same or different from the regions where the toxin has been introduced,” and the regions of energy delivery may partially or wholly overlap with the regions of neurotoxin delivery. (Ex. 1001, 8:26-29.)

25. After energy delivery, an active neurotoxin, *e.g.*, BoNT-LC, may be

delivered to permeabilized or even non-permeabilized cells. (Ex-1001, 4:52-58; 8:26-29 ("It will be appreciated that the energy may be applied to regions of the nasal membrane which are the same or different from the regions to which the toxin has been introduced.").)

26. The '675 patent discloses embodiments of a treatment device for carrying out treatment methods, an example of which is shown in FIG. 5 (below). The treatment device, called an "electroporation catheter system 20," includes a "pulse generator 24" and a "catheter 22." The catheter 22 includes a distal end 28 with electrodes 30, 32 (*orange*).

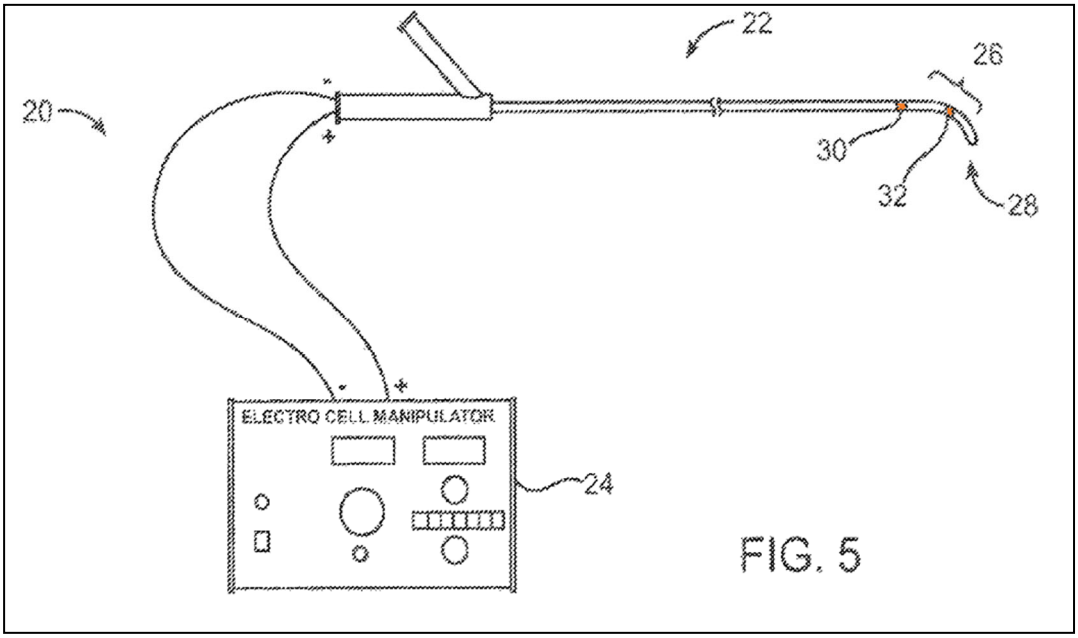

(Ex. 1001, FIG. 5 (annotated)).

27. Multiple electrode arrangements are disclosed in the '675 patent. For example, in FIG. 5A (below) the electrodes are arranged to "produce[] an electric

field concentrated in a lateral direction from the catheter body," and in FIG. 5B (below) the electrodes are arranged "to create a more uniform electric field about the shaft of the catheter body." (Ex. 1001, 16:54-58).

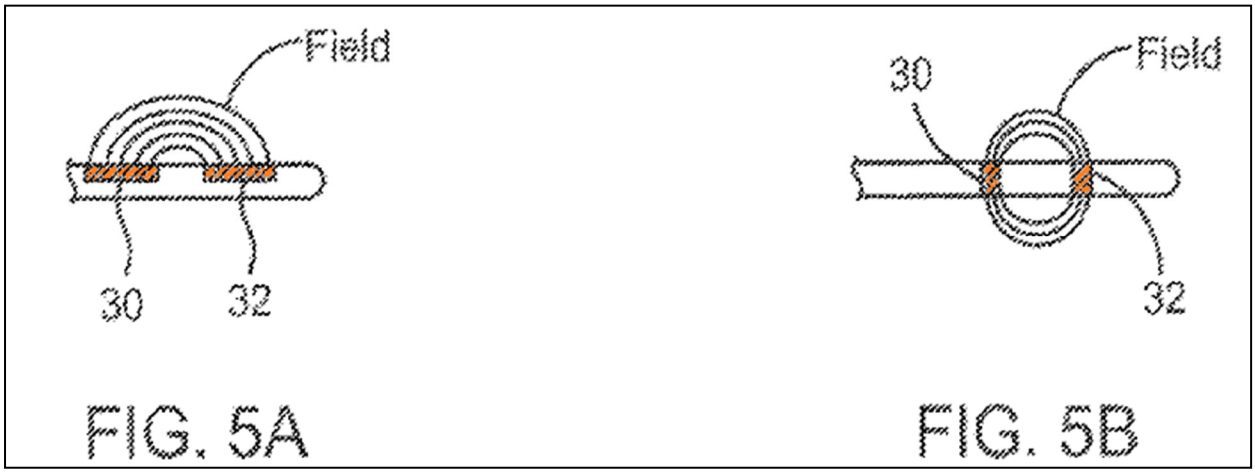

(Ex. 1001, FIGS. 5A-B (annotated).)

B. Prosecution History of the '675 Patent

The prosecution history of the '675 patent was brief. I understand that the Examiner did not make any specific findings with respect to Makower's FIG. 5H. Rather, the Examiner's Reasons for Allowance was limited to the following short paragraph, which simply identified Makower as the "closest prior art":

> The closest prior art is Makower et al (US Publication 2005/0240147) of record. Makower et al teach of treating disorders of the ear, nose and throat via inserting an energy emitting device into the nasopharynx. (See abstract). However, Makower et al do not teach or fairly suggest treating nasal conditions with a device so as to disrupt neural activity such that mucus secretion is reduced in the nasopharyngeal passage, and wherein the target tissue has a change in temperature.

(Ex. 1022 at 122.) For the reasons below, a POSITA would not have considered Makower to be "the closest prior art." Indeed, it is only with hindsight that a POSITA would have considered Makower even tangentially pertinent to the '675 patent.

C. Priority Date of the '675 patent

28. Counsel for Foundry has asked me to apply a priority date of July 21, 2006. I have done so in my analysis herein.

D. Challenged Claim Overview

29. As I note above, claims 1-3, 7, 9-10, and 17-25 are the Challenged Claims, of which claims 1 and 17 are independent. Independent claim 1 and 17 are directed to "a method of treating a nasal condition of a patient," and each include three steps:

- "positioning a distal portion of a treatment device proximate to target tissue in a nasopharyngeal passageway of a patient;"
- "administering therapy to the target tissue with the treatment device" to "[disrupt]/[alter]" the target tissue "such that mucus secretion is reduced in the nasopharyngeal passageway" (claim 1) / "such that congestion in the nasopharyngeal passageway is reduced" (claim 17); and
- "wherein administering therapy" comprises "delivering energy to the target tissue."

Thus, independent claims 1 and 17 are directed to the first step of the ’675 patent’s disclosed treatment method—delivering energy.

30. Dependent claims 2-16, which depend from claim 1, and 18-20, which depend from claim 17, recite additional features of the method and/or treatment device. For example, non-challenged dependent claims 12-13 and 28-30 are directed to the second step of the disclosed method:

- 12. The method of claim 1, wherein administering therapy further comprises delivering an agent to the target tissue.
- 13. The method of claim 12, wherein the agent comprises a neurotoxin.
- 29. The method of claim 28, further comprising delivering an agent to disable the adrenergic cells.
- 30. The method of claim 29, wherein the agent comprises a neurotoxin.

E. Claim Construction

31. I have been asked by Counsel for Foundry to apply the “plain and ordinary” meaning to the terms in the Challenged Claims. I have done so, and from the perspective of a POSITA as of July 21, 2006.

VI. PERSON OF ORDINARY SKILL IN THE ART (“POSITA”)

32. I understand that the ’675 patent and the teachings of the prior art are evaluated from the perspective of a person of ordinary skill in the art (“POSITA”). I understand that the factors considered in determining the ordinary level of skill in

the art include: (i) the levels of education and experience of persons working in the field; (ii) the types of problems encountered in the field; and (iii) the sophistication of the technology. I may also consider, if available, the education level of the inventor, prior art solutions to the problems encountered in the art, and the rapidity with which innovations are made in the relevant art.

33. I understand that a person of ordinary skill in the art is not a specific real individual, but rather a hypothetical individual having the qualities reflected by the factors above.

34. I understand that Petitioners contend that a POSITA at the relevant time (2006) would have had the following qualifications:

> "(1) a Doctor of Medicine (M.D.) or at least a bachelor of science degree in engineering or a related discipline;" *and*
> (2) at least three years of experience in the clinical use, design, development, ***and/or*** testing of *medical devices*, including *medical devices* that deliver energy to *tissue*."[1]

I disagree with Petitioner's definition for two reasons.

35. First, Petitioner's definition allows for a person without any knowledge of the anatomy of the nasopharyngeal passage to opine on issues distinctly related

[1] I have added emphasis herein to various quotes; emphasis should generally be taken as added herein by me unless noted otherwise.

to the medical devices used therein. As noted previously, all Challenged Claims relate to "administering therapy to the target tissue with the treatment device" … "such that mucus secretion is reduced in the *nasopharyngeal passageway*" (claim 1) or "such that congestion in the *nasopharyngeal passageway* is reduced" (claim 17), "wherein administering therapy" comprises "delivering energy to the target tissue." It is inappropriate for a person without any knowledge of the anatomical features and corresponding issues associated with treatment of the nasopharyngeal passageway to opine on methods or devices for treating the nasopharyngeal passageway. I note that Petitioner's expert, Dr. Bu-Saba, agrees with me that a POSITA should have knowledge of the nasopharyngeal passageway to properly opine on the claims in this proceeding. (Ex. 2002 at 125:15-127:11.) The Lane reference cited by Dr. Bu-Saba as well as a book for which Dr. Bu-Saba authored a chapter agree with me:

> "Because of the highly intertwined nature of nasal form and function, it is the responsibility of the rhinoplasty surgeon to take into account the 'invisible' internal portion of the nasal cavity while focusing on the outwardly visible external structure." (Ex-1064-Lane at 387.)

> "A thorough understanding of the functional anatomy and physiology of the nose and paranasal sinuses *is essential* in approaching the diagnosis and treatment of sinonasal diseases in

> children and adults. By considering the sequential development of the sinuses with maturation and the intricate anatomic and physiological mechanisms that are involved in the function of the sinuses in disease and in health, clinicians will be able to apply these principles in the effective management of sinonasal pathology." (Ex-2007 at 95.)

> "An understanding of the embryology, developmental and adult anatomy, and physiology of the nose and paranasal sinuses is important in assisting clinicians with appropriate diagnosis and management of the patient with nasal and sinus diseases. Ongoing study of the intricate nature of sinonasal function in disease and in health can provide physicians with a better appreciation of these complex diseases, and can facilitate better outcomes in children and adults with acute and chronic rhinosinusitis." (Ex-2007 at 108.)

36. Further evidence showing a POSITA should have a thorough understanding of nasal anatomy is provided in §VII, below.

37. Second, Petitioner's definition allows for an M.D. who has only clinically used or tested medical devices to opine on the technology associated with such medical devices. It is my opinion that a person who is only an M.D. and who has only clinically used or tested medical devices is insufficiently skilled to opine on the technology associated with such medical devices because they have never designed or developed a medical device. Simply using or testing a device does not

impart any understanding of the scientific principles underlying the functionality of the medical device, whereas the design and development of a medical device involves knowledge of, and application of, those scientific principles to successfully and safely energize tissue in the nasopharyngeal passage.

38. Accordingly, the proper definition of a POSITA for purposes of this IPR is:

> "(1) a Doctor of Medicine (M.D.) or at least a bachelor of science degree in engineering or a related discipline;" *and*
> (2) at least three years of experience *in the* ***design and development***, of ***nasal*** *medical devices*, including ***nasal*** *medical devices* that deliver energy to *the nasopharyngeal passage*."

39. I meet all POSITA qualifications. I have been an M.D. in in Otolaryngology since 1975. I had also helped design and develop several nasal medical devices, including the laser medical device referenced above in Section II. As noted previously, from 2005 until 2010, I worked as a consultant at Acclarent (which was purchased by Johnson & Johnson in 2010) and participated in the scientific advisory board, worked with research and product development, and was involved in worldwide education regarding balloon sinuplasty, and in research and clinical publications. From July of 2010 until November 2016, I worked as the Vice President of Medical Affairs at Johnson & Johnson in the Acclarent company. As the VP of Medical Affairs at Acclarent, I was involved in quality engineering,

complaint handling, research and product development, clinical trials, and strategic marketing representing the voice of the customer. Since 2007, I have also worked as the Medical Director for Rhinosystems, Inc. (RSI) in Brooklyn, Ohio. Among other things, RSI develops, manufactures and distributes the Navage Nasal Hygiene System, the world's first handheld nasal irrigator that uses gentle suction.

VII. NASAL ANATOMY AND PHYSIOLOGY

40. Nasal anatomy and physiology are complex with many interrelated anatomical features; there are multiple nerves, bones, tissues, and cartilage components throughout the nose, nasal cavity and nasopharyngeal passage. As shown above, one cannot properly treat a properly diagnosed nasal issue without fundamentally understanding the complete nasal anatomy and physiology of that issue, including the nasal cavity, the nasopharynx and the associated nerves and arteries, among others.

41. I have reviewed Dr. Bu-Saba's Declaration (Ex-1002) and generally agree with his use of the Lane article (Ex-1064) to describe the anatomy of the nose, nasal cavity and nasopharyngeal passage. Below are several figures from Lane, illustrating various anatomical features of the nose.

The Foundry, LLC Exhibit 2003, Page 24 of 65
Neurent Medical Inc. & Neurent Medical Ltd. v. The Foundry, LLC
IPR2024-00279

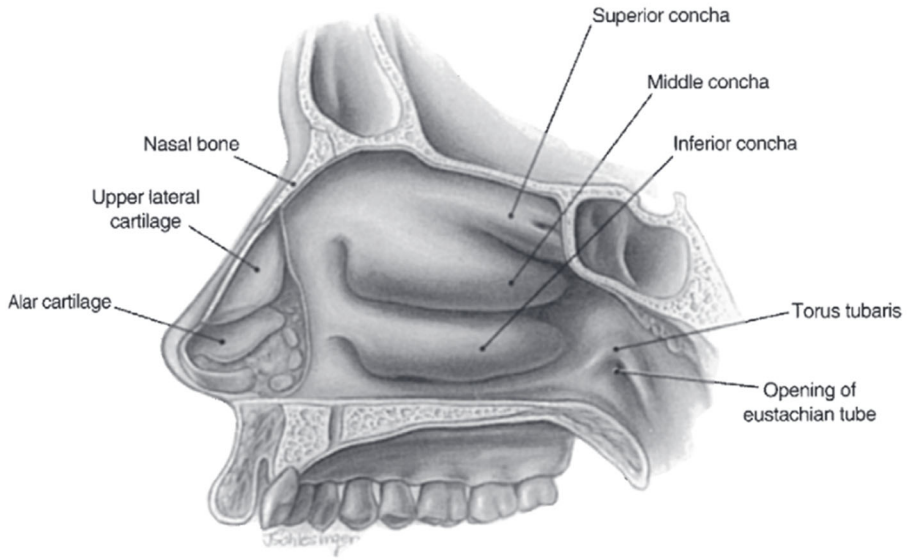

Fig. 1. Lateral nasal wall anatomy. Left side of the nose with nasal septum removed. (*From* O'Neal RM, Beil Jr RJ, Schlesinger J. Surgical anatomy of the nose. Otolaryngol Clin N Am 1999;32(1):175 [Fig. 29]; with permission.)

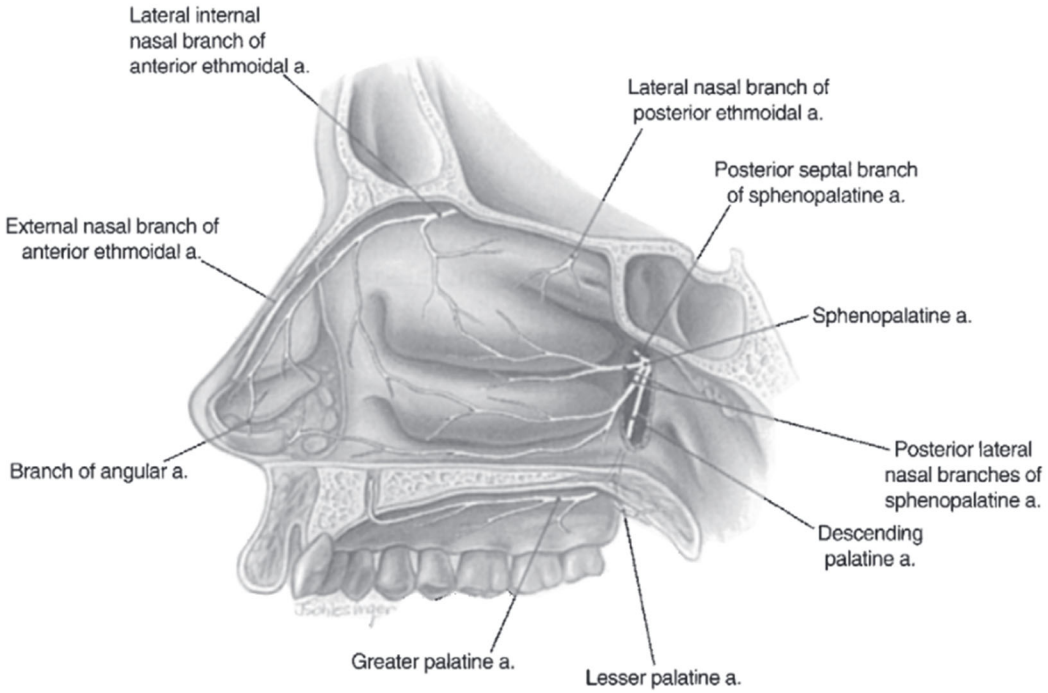

Fig. 2. Right lateral wall of the nose showing arterial blood supply. (*From* Otolaryngol Clin N Am 1999;177 [Fig. 32]; with permission.)

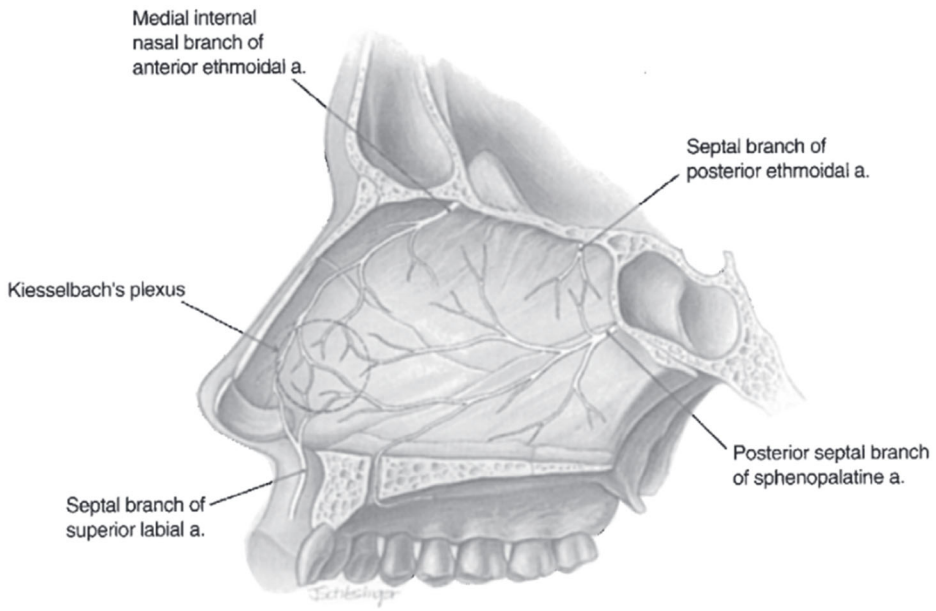

Fig. 3. Left side of the nasal septum showing arterial blood supply. Circle demonstrates Kesselbach's plexus. (*From* Otolaryngol Clin N Am 1999;177 [Fig. 33]; with permission.)

(Ex-1064-Lane at FIGS. 1-3.)

42. Several important features of the nose and its conditions as it relates to this IPR are described below:

- Lateral Wall and Concha/Turbinates:
    - "The lateral nasal wall presents an irregularly shaped surface characterized by the inferior, middle, and superior turbinates … Scroll-like in shape and pitted, the conchal bones support the soft tissue erectile component of the turbinates. The projection of each concha into the nasal cavity creates a space beneath the turbinate called a meatus. The inferior meatus lies between the inferior turbinate and the floor of the nose. Contained within this space is the orifice of the nasolacrimal duct. Between the inferior and middle turbinate lies the middle meatus, a region critical to the function of the anterior paranasal sinuses. The

frontal, maxillary, and ethmoid sinuses all have their outflow through this area either directly or by means of the ethmoidal infundibulum." (Ex-1064-Lane at 388.)

- FIG. 1 in Lane (above) shows the location of the concha/turbinates in the lateral wall.
- A POSITA knows that the terms "turbinate" and "concha" are generally interchangeable.

- Septum:
  - "The midline of the nose consists of a structure known as the nasal septum. This structure is composed of both bone and cartilage, and divides the nasal cavity roughly into two equal halves. The anterior portion of the nasal septum is composed of the quadrilateral cartilage, while the more posterior portion of the septum is composed of the perpendicular plate of the ethmoid bone superiorly and the vomer inferiorly. At its posterior limit, the vomer ends at the posterior choanae of the nose." (Ex-2007 at 100-101.)
- Deviated Septum:
  - "Nasal septal deviation is an asymmetric bowing of the nasal septum that may compress the middle turbinate laterally, narrowing the middle meatus. Bony spurs are often associated with septal deviation. Nasal septal deviation is usually congenital but may be a post traumatic finding in some patients. Nasal septal deviation occurs with a similar frequency in asymptomatic persons with no CT evidence of sinusitis and in patients with sinusitis. When the angle of deviation is high, it may contribute to the mechanical obstruction of the anterior ostiomeatal complex." (Ex-2007 at 67.)

- Nasopharyngeal Passage:
    - The nasopharyngeal passage includes the nasal cavity and the nasopharynx. (Ex-1002-Bu-Saba at ¶32.)
    - The nasal cavity includes, *inter alia*, the inferior, middle and superior turbinates/concha. (Ex-1064-Lane at FIG. 1.)
- Nasal Arteries, the Sphenopalatine and the Sphenopalatine Foremen:

  "The major arterial source for the remainder of the nasal cavity is the internal maxillary artery, which branches terminally within the pterygopalatine fossa. The sphenopalatine branch exits into the nose via the sphenopalatine foramen, located near the posteroinferior attachment of the middle turbinate. This artery divides into posterior lateral and posterior septal branches that supply the turbinates, lateral nasal wall, sinuses, and septum. The posterior septal artery gives off the nasopalatine artery, which continues anteriorly in a groove along the vomer to reach the incisive foramen. Another branch of the internal maxillary artery, the descending palatine artery, exits into the oral cavity through the greater palatine foramen. An important area of arterial anastomosis occurs at the anterior nasal septum, linking branches of the greater palatine, superior labial, sphenopalatine, and anterior ethmoid arteries." (Ex-1064-Lane at 390.)
- Anterior Ethmoidal Nerve:
    - "The nasociliary nerve in turn divides into anterior and posterior ethmoid nerves that enter the nose together with their respective arteries. *The anterior ethmoid nerve supplies the anterior lateral nasal wall*, while the posterior ethmoid nerve innervates the posterior and superior septum and lateral nasal wall." (Ex-1064-Lane at 391; *see also id.* at FIGS. 2-3.)

- Bony Anatomy and Paranasal Sinuses:
    - "Understanding the relationship of the *bony anatomy* of the face and the pneumatized cells within this bony framework *is essential in appreciating the anatomy of the paranasal sinuses*. The structures that make up the framework of the face include the nasal bones and cartilages, the ethmoid bones, the maxillary bones, and the frontal and sphenoid bones. The outer structure of the nose is formed by the paired nasal bones, as well as the upper lateral and lower lateral cartilages inferiorly. These structures provide prominence to the nasal pyramid, as well as allowing for an aperture to provide airflow through the nasal cavity (Fig. 5)" (Ex-2007 at 100.)

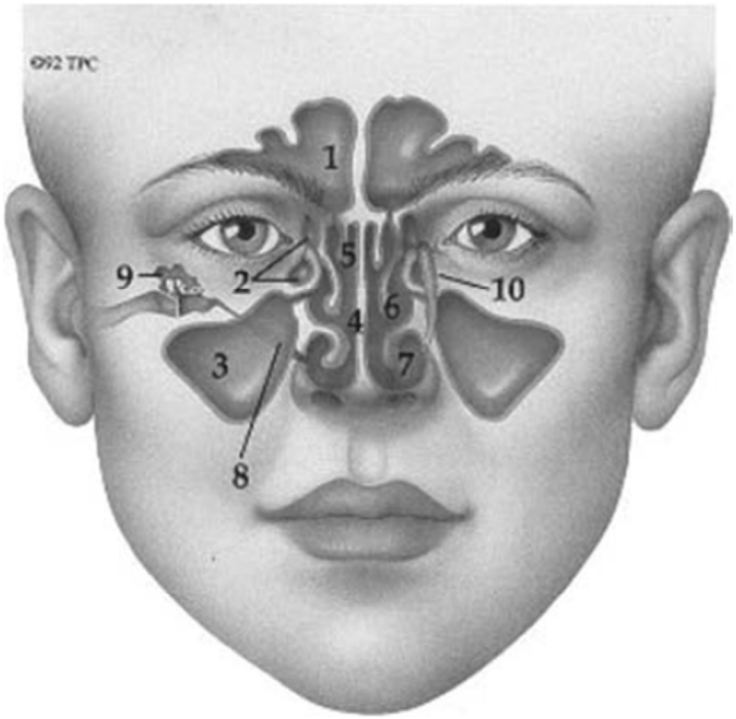

Figure 5 Coronal view of the paranasal sinuses. 1. Frontal sinuses. 2. Ethmoid sinuses. 3. Maxillary sinuses. 4. Nasal septum. 5. Superior turbinate. 6. Middle turbinate. 7. Inferior turbinate. 8. Eustachian tube. 9. Middle ear. 10. Nasolacrimal duct.

(Ex-2007 at 101.)

The Foundry, LLC Exhibit 2003, Page 29 of 65
Neurent Medical Inc. & Neurent Medical Ltd. v. The Foundry, LLC
IPR2024-00279

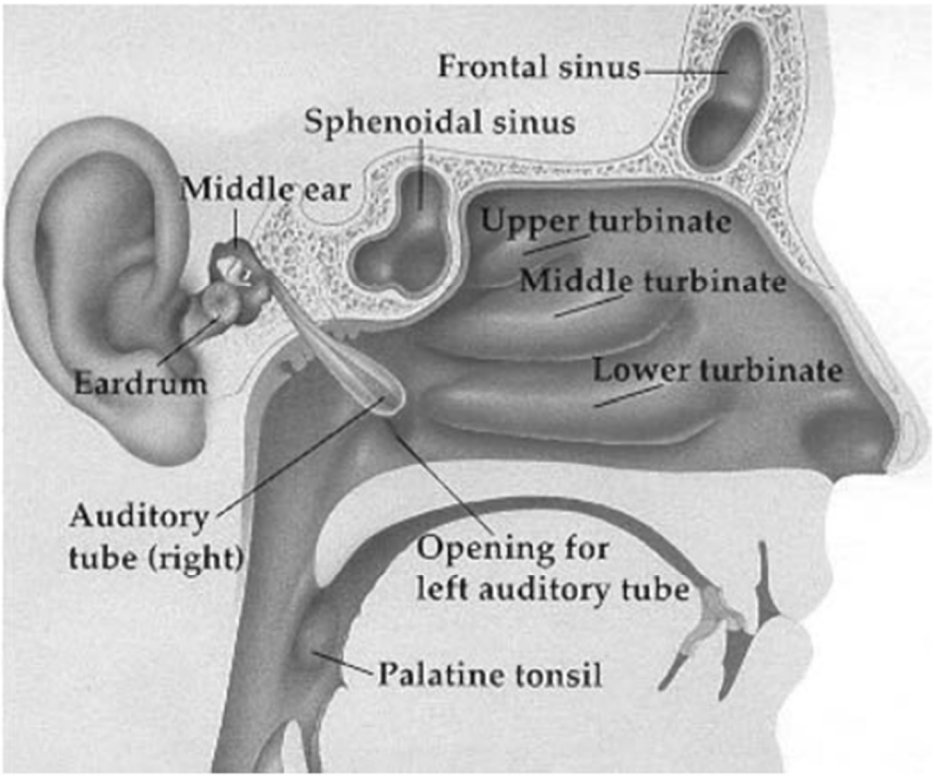

Figure 6 Sagittal view of the nose, paranasal sinuses, Eustachian tube, and middle ear.

(Ex-2007 at FIG. 102.)

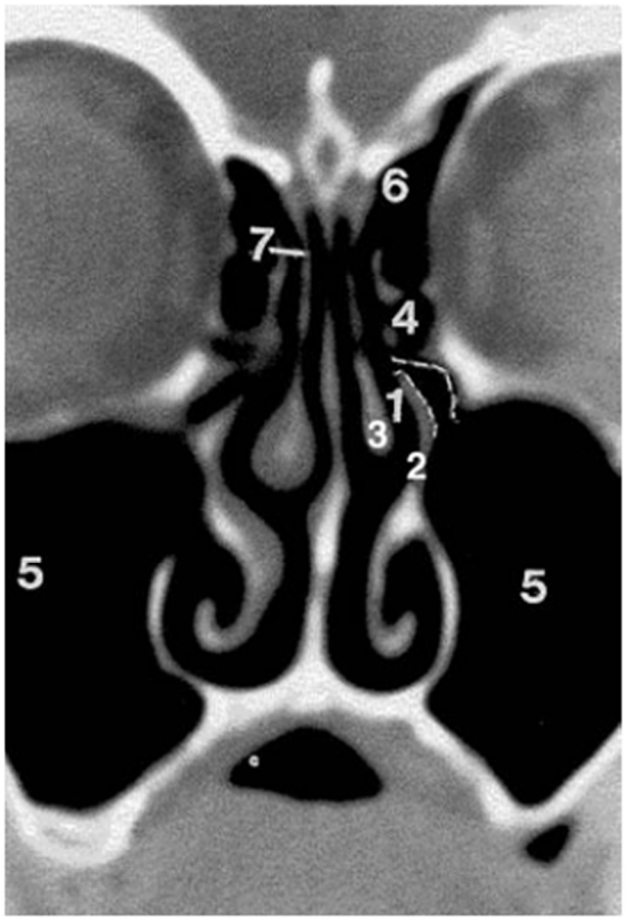

Figure 7 Coronal CT radiograph of the paranasal sinuses with ostiomeatal complex outlined. 1. Middle meatus. 2. Uncinate process. 3. Middle turbinate. 4. Ethmoid sinuses. 5. Maxillary sinuses. 6. Frontal recess. 7. Middle turbinate. Dashed lines outline the area of the infundibulum and OMC. *Abbreviation*: OMC, ostiomeatal complex.

(Ex-2007 at 103.)

- Sinusitis versus rhinitis:
    - "Sinusitis refers to an inflammatory process localized within one or more of the paranasal sinuses, whereas rhinitis is an inflammatory process within the nasal cavity. Since it is unusual for sinusitis to be present without a concurrent rhinitis, rhinosinusitis may be a more appropriate descriptor for this clinical disease process." (Ex-2007 at 40.)

43. A POSITA would understand that the rhinitis discussed above is referring to viral or bacterial rhinitis, which is also known to those skilled in the art as "infectious rhinitis." Another type of rhinitis known in the art is "allergic rhinitis," which is rhinitis caused by an allergic reaction most commonly from airborne allergens. A POSITA would have understood that there are two types of allergic rhinitis—"seasonal allergic rhinitis" and "perennial allergic rhinitis." Seasonal allergic rhinitis is typically triggered by seasonal airborne allergens, such as pollen. Perennial allergic rhinitis is typically triggered by indoor allergens, such as dust.

44. As may be appreciated by even a layperson, the nose / nasal space is highly complex and requires a thorough understanding of its complete anatomy and physiology (structure and function) to properly design and develop nasal medical devices.

VIII. TREATMENT OF MECHANICAL OBSTRUCTIONS

45. In my practice, I regularly treat mechanical obstructions in the nasal cavity. I also regularly diagnose and treat the underlying issues causing perennial allergic rhinitis. There are significant and important differences between the treatment of mechanical obstructions and the treatment of excess mucus caused by the nerves.

46. There are several manners in which a mechanical obstruction may occur in the nose, including, most commonly for instance, via nasal polyps, a

deviated septum, and enlarged turbinates. A mechanical obstruction may cause various issues, including, for instance, intake of air into the body and/or proper drainage of mucus from the sinuses and aeration of the sinuses.

47. For instance, as the book *Sinusitis* explains:

> "The function of the nose is to allow inspired air to enter the upper respiratory system and to be delivered to the tracheobronchial tree. The presence of the turbinates on the lateral nasal walls allows this airflow to be turbulent, creating eddies in flow as the air moves posteriorly from the nostrils to the posterior choanae. This flow pattern directs the inspired air to come into contact with a large surface area of the nasal mucosa as it moves posteriorly, which allows three physiological functions during flow: filtration, warming, and humidification (5) (Table 2)." (Ex-2007 at 106.)

> "Disruptions in the normal clearance of mucus from the sinus chambers results in mucous stasis within the sinuses, which leads to a sequence of events that predisposes those sinuses to both acute and chronic dysfunction and infection. Ventilation of air into the sinuses and drainage of mucus from the sinuses is central in the normal physiologic function of the sinuses, and *interference with this ventilation and drainage is a key component in the pathogenesis of acute and chronic rhinosinusitis*. (Ex-2007 at 107.)

48. In certain patients, it may be necessary to remove or shrink and/or reshape tissue within the nasal cavity to allow the sinuses to properly drain:

> "If a person with an episode of acute…sinusitis has a history of frequent episodes of recurring sinusitis, *endoscopic sinus surgery performed to identify a mechanical obstruction prohibiting appropriate sinus drainage* may allow surgical correction to prevent subsequent recurrences." (*Id.* at 216.)

Procedures for widening a passageway (e.g., in the nasal cavity or sinuses) may be referred to as treatments for mechanical obstructions. In certain instances, a passageway may be enlarged using a surgical treatments (e.g., by removing tissue). In other instances, the tissue may be fractured, permitting its shape to change. Further, in other instances, a passageway may be enlarged using a thermal or energy treatment to shrink tissue. In such thermal or energy treatments, the goal is to widen the passageway *without destroying the tissue* in the passageway. In other words, the functionality of the structure remains intact. This was the goal of Makower's FIG. 5H device. (Ex-1005 at ¶0092 ("FIG. 5H is a partial perspective view of a *tissue shrinking electrode device* being used in accordance with the present invention.").)

49. The claims of the '675 patent relate to treating excess mucus secretion or congestion by treating nerves in the nasopharyngeal passage. (Ex-1001 at 27:38-28:30.) Treating nerves to reduce mucus secretion is completely separate from and different than treating a mechanical obstruction. For instance, it was known to a POSITA that mucus secretion could be reduced by a Vidian neurectomy. This is one example of how nerves may be treated to reduce mucus secretion. A POSITA

would have known that treating a mechanical obstruction by tissue shrinking is not the same thing as, and has no bearing on, treating nerves in the nasopharyngeal passage to reduce mucus secretion.

IX. THE SPECIFICATION OF THE '675 PATENT SUPPORTS THE USE OF ENERGY ALONE TO REDUCE MUCUS SECRETION AND/OR CONGESTION

50. I have been informed by Counsel for Foundry that the Patent Trial and Appeal Board ("Board") initially determined that the '675 patent did not describe the use of energy alone to treat tissue: (1) "such that mucus secretion is reduced in the nasopharyngeal passageway" (claim 1); or (2) "such that congestion in the nasopharyngeal passageway is reduced" (claim 17). Specifically, the Board stated

> "In the '675 patent Specification, energy is applied ***only*** to achieve cell membrane permeabilization or poration and effectuate the delivery of neurotoxin into to target cells."

I disagree. As shown below, the '675 patent specifically discloses the use of non-reversible energy to achieve reduced mucus secretion or congestion.

51. As explained previously, the '675 patent describes a two-step process, the first of which is the application of energy to tissue. The '675 patent specifically states that the applied energy may be reversible or non-reversible:

> "According to the present invention, botulinum toxin, ricin, exotoxin A, diphtheria toxin, cholera toxin, tetanus toxin, other neurotoxins, and active fragments thereof are delivered to a patient's nasal

> membrane *while applying energy to target cells within the membrane under conditions which cause a reversible (or in some instances* ***non-reversible****) poration of the cell membranes to enhance delivery of the toxin into the cells*. The region where the toxin is introduced may comprise any portion of the nasal cavity, such as a single paranasal sinus or portion thereof, a main nasal passage, two or more paranasal sinuses, or in some cases may comprise substantially the entire nasal cavity of the patient." (Ex-1001 at 8:4-21.)

52. The '675 patent further discloses applying energy in different locations, including applying energy in regions that do not receive the neurotoxin. For example, the '675 patent specification states:

> "When the energy applicator is incorporated with or within the catheter, the delivery pattern of *the energy will* ***usually*** *be* ***at least partially overlapping*** *with the toxin delivery pattern of the catheter*. For example, when a porous balloon is used for toxin delivery, the acoustic transducer, electroporation electrodes, or the like, will usually be disposed to deliver energy which at least partly overlaps with the dispersion pattern of the toxin. *In some instances,* ***the region of applied energy will be coextensive*** *with the region of toxin dispersion.* ***In other instances, the two regions will only partially overlap****. In the latter case, the delivery of the toxin will be enabled or enhanced principally within the regions of overlap*." (Ex-1001 at 9:57-10:5; *see also* Ex-1011 at 32, ¶0020.)

53. The '675 patent specification further states:

> "The energy is preferably selectively applied to a targeted region containing a variety of cell types, including ***goblet cells***, epithelial cells, ciliated and non-ciliated columnar cells, basal cells, and less or no energy applied to untargeted regions. *It will be appreciated that the energy may be applied to regions of the nasal membrane* ***which are the same or different from the regions where toxin has been introduced***." (Ex-1001 at 8:22-29; *see also* Ex-1011 at 30, ¶0014.)

54. In view of at least the above disclosures, a POSITA with the proper knowledge of nasal anatomy and physiology would have recognized that the '675 patent specification discloses applying energy in regions that may or may not overlap with the region of neurotoxin delivery and that those regions may relate to, for instance, goblet cells. Indeed, a POSITA with proper knowledge of nasal anatomy and physiology would have known that most of the nasal cavity is lined by goblet cells.

55. A POSITA with the proper knowledge of nasal anatomy and physiology would have recognized the '675 patent as disclosing at least the following distinct energy delivery options in relation to neurotoxin delivery:

- Reversible energy applied; region of energy delivery *co-extensive* with region of neurotoxin delivery;
- Reversible energy applied; region of energy delivery *partially overlapping* with region of neurotoxin delivery; and
- ***Irreversible*** energy applied; region of energy delivery *partially overlapping*

with region of neurotoxin delivery.

56. Moreover, based on the above disclosures, a POSITA with the proper knowledge of nasal anatomy and physiology would have recognized that the ’675 patent specification discloses applying irreversible energy in regions of the nose that have cells responsible for mucus secretion and congestion (e.g., goblet cells and nasal membrane, respectively). A POSITA would appreciate based on at least these teachings of the ’675 patent that applying irreversible energy to such tissues disrupts and/or alters target tissue such that mucus secretion or congestion is reduced in the nasopharyngeal passageway.

57. Thus, a POSITA with the proper knowledge of nasal anatomy and physiology would have recognized that the specification of the ’675 patent reasonably conveys to those skilled in the art that the inventor had possession of the claimed subject matter as of the filing date.

58. My opinions are confirmed by Dr. Bu-Saba, as shown by his below testimony:

- “Unlike electroporation where energy is applied to create pores in cells, ablation involves applying energy to damage or modify tissue for therapeutic effect.” (Ex-1002-Bu-Saba at ¶38.)
- “For each location in the body where ablation is used, tissue causing a condition or symptom is destroyed or modified such that the treatment reduces

or stops the ablated tissue's operation, and thereby addresses the condition or symptom. *Thus, ablation has a qualitatively different goal than reversible electroporation*. While reversible electroporation is designed to maintain the operation of cells and enhance their treatment by other therapeutic agents, *ablation is designed to alter (or destroy) the cells and thereby directly treat the condition or symptom*." (*Id.*)

- "Another well-known technique involved delivering energy to the nose in order to ablate the cells responsible for controlling or causing rhinitis and its symptoms." (*Id.* at ¶46.)
- "To ensure that neurotoxins enter the bronchial tubes and facial skin…treat tissue, the applied energy must cause reversible poration. Otherwise, the target cells would die and the therapeutic benefit of the neurotoxins would not be achieved. In contrast, energy for RF ablation is specifically designed and intended to permanently damage tissue. As a result, it was well-known that the energy used for RF ablation was 'distinctly different from the pulses which produce electroporation.'" (*Id.* at ¶64.)
- "As I discussed above, using energy for poration in connection with delivery of a drug (like neurotoxin) is different than using energy for ablation." (*Id.* at ¶72.)

59. I further note that Dr. Bu-Saba failed to address the "non-reversible"

energy teachings of the ’675 patent. Instead, Dr. Bu-Saba only focused on the reversible energy teachings, so I find his analysis and opinions incomplete. (*See* Ex-1002-Bu-Saba (failing to address non-reversible energy delivery).)

60. When considering the entirety of the disclosure of the ’675 patent, a POSITA with the proper knowledge of nasal anatomy and physiology would know that the ’675 patent reasonably conveys to a POSITA the use of energy alone to disrupt or alter tissue:

- “such that mucus secretion is reduced in the nasopharyngeal passageway” (claim 1); OR
- “such that congestion in the nasopharyngeal passageway is reduced” (claim 17).

X. A POSITA WOULD NOT HAVE COMBINED THE TEACHINGS OF MAKOWER AND FANG

61. I understand that in the Petition, Petitioners alleged that all Challenged Claims are unpatentable as obvious over the combination of Makower and Fang. This falls under Ground 4 in the Petition. I understand that in arguing that the Challenged Claims are unpatentable under Ground 4, Petitioners assert that a POSITA would have been motivated to combine Makower and Fang and also asserts that the Makower-Fang combination discloses each limitation in the Challenged Claims. I understand that Petitioners’ proposed Makower-Fang combination does not purport to structurally modify Makower. Rather, Petitioners’ proposed

Makower-Fang combination, as I understand it, alleges that it would have been obvious to use Makower device shown in FIG. 5H—as is—to ablate tissue in the nasopharyngeal passage to treat rhinitis or associated symptoms (e.g., mucus secretion and congestion), per Fang. (Ex-1002 at ¶164.)

62. I have been asked to provide my opinions regarding claim 22, and whether a POSITA would have understood Makower or Imran (Ex-1068) to disclose that claim, as Dr. Bu-Saba asserts.

63. In this section, I provide my opinions regarding motivation to combine. Specifically, as I explain below, it is my opinion that a POSITA would not have been motivated to combine Makower and Fang. The focus of Makower is flexible catheters, not RF devices. Makower's FIG. 5H device is the only one out of over forty flexible catheter device embodiments disclosed by Makower that illustrates a device with electrodes. Moreover, as I explain below, Fang is an obscure study with inconclusive results. Indeed, if I was presented with Fang as a peer reviewer, I would not have recommended the study for publication given its confusing, inconclusive results with unknown variables, incomplete statistical analysis, and unknown treatment methods. Accordingly, a POSITA would not have been motivated to use Fang for any teaching, let alone in combination with Makower as Petitioners propose.

64. Moreover, as I explain below, given Makower's FIG. 5H device

structure, a POSITA would not have been motivated to use Makower's FIG. 5H device in the nasopharyngeal passage to treat target tissue because a POSITA would not have had a reasonable expectation success of ablating that target tissue. During use of Makower's FIG. 5H device in the nasopharyngeal passage, mucus, blood or saline, for instance, would enter the hollow space between Makower's struts, and these fluids would result in energy from Makower's electrodes preferentially entering the fluid(s) and not the targeted tissue. In addition to calling into doubt the ability of Makower's device to function as Petitioners propose, it also raises safety and efficacy concerns that a POSITA would not want to endure. Thus, as explained in further detail below, a POSITA would not have been motivated to combine Makower and Fang.

A. Fang's Findings Are Inconclusive

65. I understand that according to Petitioners and Dr. Bu-Saba, Fang "clarifies" that Makower's FIG. 5H device can ablate tissue, per Fang. I disagree that Fang provides any clarity to a POSITA. (Ex-1002-Bu-Saba at 170 ("it is my opinion that a person of ordinary skill in the art would have understood that Fang simply clarifies that Makower's device achieves the same therapeutic effect in the same manner as claimed in the '675 patent.").)

66. Fang purports to disclose a method for treating perennial rhinitis based on an 83-patient study. Fang states that each patient has a deviated nasal septum and

has met the "diagnostic criteria for perennial rhinitis." (Ex-1006-Fang at 876, Section 1.1.) Initially, Fang does not disclose to a POSITA the "diagnostic criteria for perennial rhinitis" that it used in its study. Rather, Fang cites to a document at endnote one a purportedly disclosing this "diagnostic criteria." (*Id.*) I am not familiar the document cited in endnote one, and I understand Petitioners did not submit it in this proceeding. I further note that Dr. Bu-Saba did not evaluate the "diagnostic criteria for perennial rhinitis" in his review of Fang. (Ex-2002-Bu-Saba-Tr. at 192:2-14.)

67. Fang also does not disclose the specific symptoms of perennial rhinitis that were experienced by each patient in the study. A POSITA would have understood that perennial rhinitis symptoms include, but are not limited to, congestion, mucus secretion, itchy nose, sneezing, watery eyes, itchy throat, and/or sore throat. In Petitioners' Ground 4, Petitioners look to Fang for its purported teaching that RF energy can be used to ablate tissue in the nasopharyngeal passage to reduce mucus secretion or congestion. But without knowing whether any of the patients in the study even experiences these symptoms, a POSITA would not have looked to Fang for this teaching.

68. In addition, a POSITA also would not look to Fang to clarify that Makower's device can be used to reduce mucus secretion/congestion due to Fang's uninformative disclosure of the treatment device. To determine, as Petitioners

allege, that Fang clarifies how Makower's device could be used, a POSITA would want to know whether there were any structural similarities between Makower's and Fang's treatment devices. But Fang does not provide any information to a POSITA regarding the structure of its device.

69. Specifically, Fang identifies the treatment device as a "SHP-I five organ radiofrequency therapy instrument." (Ex-1006-Fang at 876, Section 1.2.) I understand that Petitioners assert this is a "generic device" which "us[es] factory settings." (Petition at 77, n.17.) Dr. Bu-Saba similarly opined that the SHP-I device "is a commercially available RF treatment device that comes with many factory preset settings," that "there [were] many available in the 2000s," and that "those of ordinary skill in the art would routinely use and know how to operate" the SHP-I device. (Ex-1002-Bu-Saba, ¶81.) I disagree with Dr. Bu-Saba. Initially, prior to reading Fang, I had never heard of the SHP-I device—that is, I was not aware of it now or in the 2000s at the time of the '675 patent. At that time, and to this day, I referred to myself as an early adopter of technology for treating nasal conditions. I was consistently making myself aware of commercially available devices. If Fang's SHP-I device was "routinely used" as Dr. Bu-Saba alleges, I would have been familiar with the device.

70. I understand that during his deposition, Dr. Bu-Saba admitted that he was not familiar with the SHP-I device, did not know its structure, and only heard

the device name for the first time when reading Fang. (Ex-2002-Bu-Saba-Tr. at 180:8-181:4.) A POSITA would not have looked to Fang to provide any information about Makower's device, without knowing Fang's device.

71. Fang's study is also inconclusive as to the effects of RF energy on perennial allergic rhinitis. Specifically, to determine whether Fang actually teaches that ablating tissue in the nasopharyngeal passage achieves the result of reduced mucus secretion or congestion, as Petitioners allege, a POSITA would need to see conclusive proof that RF energy alone was responsible for the improvement in perennial allergic rhinitis. Fang cannot provide such proof.

72. Initially, while Fang alleges "improved efficacy" for patients who received RF energy treatment, Fang also treated an unknown number of these patients with additional non-RF medical procedures:

> Further submucosal resection of the nasal septum was performed, an uncinate process resection, sinus opening, lateral part resection of the middle turbinate, or nasal polypectomy were performed *for those who had* hypertrophy of the uncinate process, sinusitis hypertrophy or polypoid lesion of the middle turbinate, or nasal polyps. (Ex-1006-Fang at 876, Section 1.2.)

Fang does not disclose how many of the 63-patients received these additional procedures/treatments. In other words, it is entirely unclear to a POSITA how many people in Fang's study received treatments or in what combination the treatments

were used beyond RF energy; it could have been a few, it could have been a lot. We do not know because Fang does not tell us. What this means is a POSITA cannot rule out that the alleged improvements in perennial allergic rhinitis were due to some or all of these other procedures, and not due to RF energy treatments. I note the Dr. Bu-Saba agrees with me that it is impossible to know from Fang which patients only received RF energy versus those who received these additional procedures. (Ex-2002-Bu-Saba-Tr. at 188:19-189:15, 203:2-8-205:14, 214:1-11.)

73. Typically, in a study comparing a control group to a participant-group having a new treatment, I would advise that only a single variable be changed so that the results are tied to that single variable. This is because changing multiple variables in a study does not allow any insight on to which of the many variables facilitated improvements in a patient's condition. In Fang, there were too many variables changed from the control group, other than RF energy application, for a POSITA to tie the efficacy of Fang's treatment method to RF energy, alone.

74. In addition, Fang's study is inclusive to a POSITA because it does not define what meets the "efficacy" requirements. Rather, Fang states "[t]he efficacy was evaluated according to the evaluation criteria for allergic rhinitis," citing to the same background document I noted previously. Again, Dr. Bu-Saba did not review this document, and it is also unclear to me what standards Fang used to calculate his efficacy.

75. Fang's efficacy results are also unclear. Fang also reports its results in terms of "the rate of excellent recovery," "the efficacy rate," and "the total efficacy rate." (Ex-1006-Fang at 877, Section 2.) But Fang does not describe the meaning of any of these phrases. I understand that Dr. Bu-Saba testified that he did not know what Fang meant by these results. (Ex-2002-Bu-Saba-Tr. at 207:2-21.) Neither do I—it is not clear to me how Fang calculated efficacy or total efficacy, especially in view of the fact that he an unknown number of patients with both RF energy and addition surgical procedures.

76. For at least the above reasons, a POSITA would have found Fang's results inconclusive as it relates to whether RF energy alone truly was able to effectively treat perennial allergic rhinitis.

B. Makower Is Focused On Flexible Catheters

77. As discussed above, Petitioners' Ground 4 combination is Makower's FIG. 5H device in combination with Fang. I understand that Petitioners contend a POSITA would have been motivated to combine Makower and Fang because, *inter alia*, Makower is directed to the "problem" of "treating nasal conditions" and that Makower solves this problem by "applying energy to tissue." (Petition at 76.) I disagree. A POSITA having reviewed Makower in its entirety would understand that Makower is directed to improved ear, nose, and throat procedures using a *flexible* catheter, and therefore would not have looked to Makower in the first

instance, for a device that could be used to reduce mucus secretion or congestion in the nasopharyngeal passage. In the paragraphs below, I begin by walking through Makower and identify the disclosure in Makower which informs a POSITA as to the crux of Makower's disclosure. I will then explain where Makower's FIG. 5H is identified within Makower's disclosure.

78. First, Makower describes the "Field of Invention" as "minimally invasive, ***catheter based devices***, systems and methods for treating sinusitis and other ear, nose, and through disorders." (Ex-1005-Makower at [0001].) Thereafter, Makower includes a Background section, which generally describes the nasal anatomy and issues that may arise, requiring treatment: including nasal polyps, sinusitis, deviated septum, enlarged nasal turbinates, and sinus tumors. Makower then describes issues with surgical treatments, including, for example, endoscopic surgery because devices use rigid shafts:

> One of the reasons why FESS and sinus surgery is so bloody and painful relates to the fact that straight **instrumentation with rigid shafts** are used. Due to the fact that the sinuses are so close to the brain and other important structures, physicians have developed techniques using straight tools and image guidance to reduce the likelihood of penetrating into unwanted areas. In an effort to target deep areas of the anatomy, this reliance on straight instrumentation has resulted in the need to resect and remove or otherwise manipulate any anatomical structures that may lie in the path of the instruments,

> regardless of whether those anatomical structures are part of the pathology. (Ex-1005-Makower at [0036].)

79. Makower then states that the purpose of his invention is to provide flexible catheters/instrumentation:

> With the advances in catheter based technology and imaging developed for the cardiovascular system, **there exists a significant opportunity** to reduce the morbidity of sinus interventional through the use of **flexible instrumentation and guidance**.
>
> If flexible tools could be developed such that sinus intervention may be able to be carried out with even less bleeding and post-operative pain, these procedures may be applicable to a larger group of patients. Further, as described here, flexible instrumentation may allow the application of new diagnostic and therapeutic modalities that have never before been possible. (*Id.* at [0036]-[0037].)
>
> ***
>
> Many of the above-described procedures and techniques may be adaptable to minimally invasive approaches and/or the use of flexible instrumentation. There exists a need in the art for the development of such minimally invasive procedures and techniques as well as instrumentation (e.g., flexible instruments or catheters) useable to perform such procedures and techniques.
>
> SUMMARY OF THE INVENTION
>
> In general, the present invention provides methods, devices and systems for diagnosing and/or treating sinusitis or other conditions of the ear, nose or throat.
>
> In accordance with the present invention, there are provided methods

> **wherein one or more flexible catheters or other flexible elongate devices** as described herein are inserted into the nose, nasopharynx, paranasal sinus, middle ear or associated anatomical passageways to perform an interventional or surgical procedure. Examples of procedures that may be performed using these **flexible catheters** or other **flexible elongate devices** include but are not limited to …" (*Id.* at [0040]-[0042].)

80. In the Detailed Description, Makower informs a POSITA that the "present invention uses ***flexible catheters and various working device***." Makower does not refer to the "present invention" as using energy to treat any portion of the nasal cavity:

> In a number of embodiments, the present invention uses **flexible catheters and various working devices** that are mounted or delivered through **elongate flexible members or catheters**, to diagnose and treat a wide range of ear, nose and throat disorders including: nasal polyps, sinusitis, enlarged turbinates, deviated septum, tumors, infections, deformities, etc. The following pages describe a number of specific devices that are usable in accordance with this invention. (Ex-1005-Makower at [0132].)
>
> Many of the procedures of the present invention require the insertion and positioning of one or more **flexible catheters or other working devices** (examples of which are shown in FIGS. 5A-5Y""). (Ex-1005-Makower at [0134].)

81. Makower then discloses over forty embodiments of devices and

instrumentation that may use a flexible catheter. Specifically, Makower discloses several groups of flexible catheters and instrumentation according to the present invention under the following headings: "Occluders & Access Port Devices" (Ex-1005-Makower at [0133]-[0143]), "Variations in Occluder Design and Suction Apparatus" (Ex-1005-Makower at [0144]-[0159]), "Working Devices for Delivering Substances or for Cutting, Ablating, Remodeling or Expanding Bone or Soft Tissue" (Ex-1005-Makower at [0160]-[0204]), "Pre-Shaped Guide Catheters" (Ex-1005-Makower at [0205]-[0213]), "Devices and Methods for Treatment within Paranasal Sinuses" (Ex-1005-Makower at [0214]-[0221]), "General Examples of Interventions Using the Occluder & Access Devices and/or Other Working Devices" (Ex-1005-Makower at [0222]-[0238]), and "Cochlear Implant Procedures (Ex-1005-Makower at [0239]-[0242]).

82. As discussed above, Makower's Ground 4 combination relies only on FIG. 5H in Makower. This device is in the "working devices" section of the Detailed Description and is described only in FIG. 5H and in a single paragraph—paragraph [0187]. In the "Working Devices" section alone, Makower discloses over *twenty* embodiments that "may be delivered through or incorporated into ***flexible catheters*** or ***flexible rod-like shafts***." (Ex-1005-Makower at [0161].) For example, Makower explains:

> such **flexible construction** allows these devices to be delivered and

> positioned to perform the desired diagnostic or therapeutic procedures with minimal trauma to other tissues, as can result from the insertion of **rigid scopes and rigid instruments in accordance with the methodology of the prior art**. (*Id.*)

83. An examination of the "working devices" in Makower reveals to a POSITA that none of the devices are directed to applying energy to the nasopharyngeal passage to treat rhinitis or its associated symptoms. Rather, Makower's "working devices" include cutting or ablation devices (Fig. 5A), devices with laterally deployable projections (Figs. 5B, 5D), a drill (Fig. 5C), a catheter (Fig. 5D), various balloon catheters (Figs. 5E-5G'''), a tissue shrinking electrode (Fig. 5H), a cryogenic device (Fig. 5I), a tissue expanding device (Fig. 5J), various forward cutting/suction catheter/endoscope devices (Figs. 5K-5O), various balloon catheter/stent/endoscope devices (Figs. 5P-5R''), a snare catheter (Fig. 5S), forceps (Fig. 5T), a guide catheter and guidewire and endoscope (Fig. 5U-5U'), a microbrider catheter (Fig. 5V), various bone remodeling devices (Figs. 5W-5X'''''), and a substance delivering implant device (Figs. 5Y-5Y''''').

84. Makower's FIG. 5H is the *only* "working device" illustrated in Makower as having electrodes for energy delivery.

85. Thus, a POSITA, having reviewed Makower in its entirety would have understood that Makower is directed to ***flexible*** catheters and other instrumentation for use in ear, nose, and throat procedures. Based on this information, a POSITA

would not have looked to combine Makower with Fang, let alone looked to Makower as a starting point for a device to treat rhinitis and its associated symptoms with energy delivery in the nasopharyngeal passage.

C. A POSITA Would Not Have Been Motivated To Combine Makower With Fang

86. As I discussed above, given the inconclusive nature of Fang, Makower's focus on flexible catheters, a POSITA would not have been motivated to combine Makower with Fang.

87. A POSITA also would not have looked to combine Makower with Fang because a POSITA would have understood that they have diametrically opposed objectives and treatment effects. Specifically, as discussed above, Makower identifies a significant problem in nasal treatments as bloody and painful surgical treatments as a result of rigid treatment devices and purports to solve that problem with flexible treatment devices that can be used in procedures "with minimal trauma to other tissues." (Ex-1005-Makower at [0036]-[0037], [0040]-[0042].) Makower's FIG. 5H device is described as a "tissue shrinking device," (Ex-1005-Makower at [0092]), which a POSITA would have understood is used to shrink mechanical obstructions in the nasal cavity using energy *instead* of turning to a surgical procedure involving cutting and/or tissue penetration.

88. In contrast, a POSITA would have understood that Fang's treatment methods *always* involves a destructive surgical procedure. This is because Fang

discloses that each patient in the study have a deviated septum, and the first part of Fang's treatment method involves a destructive surgical procedure on all patients treat the deviated septum. (Ex-1006-Fang at 876, Section 1.1.) Thereafter, Fang discloses that these patients potentially receive other cuts and resections of the nasal ridge and walls of the nasal cavity:

> Further submucosal resection of the nasal septum was performed, and uncinate process resection, sinus opening, lateral part resection of the middle turbinate or nasal polypectomy were performed for those who had hypertrophy of the uncinate process, sinusitis, hypertrophy or polypoid lesion of the middle turbinate, or nasal polyps. (Ex-1006-Fang at 876, Section 1.2.)

In other words, a POSITA would understand that Fang intended that any radiofrequency treatment is conducted with a surgical procedure, which is contrary to the purpose of Makower. (*See* Ex-1006-Fang at 877, Section 3 ("[t]hrough ***the joint action of multiple links***, the therapeutic effect of perennial allergic rhinitis is significantly improved.").) Thus, a POSITA would not have looked to Fang as a source of "clarity" for how to use Makower to treat perennial allergic rhinitis, because Makower seeks to avoid Fang's surgical approach.

D. A POSITA Would Not Have Been Motivated To Use Makower's Device To Treat Perennial Allergic Rhinitis

89. A POSITA also would not have been motivated to combine Makower with Fang given that it is an unproven device with structural features that raise

serious safety and efficacy concerns if used according to Petitioner's proposed combination. Initially, I understand that Dr. Bu-Saba testified that he has never seen a medical device having the structure of FIG. 5H in his practice. (Ex-2002-Bu-Saba-Tr. at 303:13-18.) I also am not aware of any such device. In other words, Makower's FIG. 5H device has a structure that is unproven to a POSITA and Fang does not provide any clarity as to whether a device with Makower's structure can be used to treat perennial allergic rhinitis.

90. If a POSITA was truly interested in addressing perennial allergic rhinitis, a POSITA would look to references on that issue, and not to a disclosure (Makower) focused on flexible catheters. Moreover, a POSITA having knowledge of Fang's RF energy delivery method would not have been motivated to use Makower's FIG. 5H device to apply it in view of the structure of Makower's FIG. 5H device.

91. Specifically, a POSITA would have expected that the strut and electrode structure of Makower's FIG. 5H device would result in ineffective and/or undesirable energy delivery to the targeted and surrounding tissue, raising safety and efficacy issues.

92. As shown below, Makower's FIG. 5H device is depicted as having two struts with two electrodes on each strut. A POSITA would understand that there is a hollow opening between the struts, as shown in annotated FIG. 5H below.

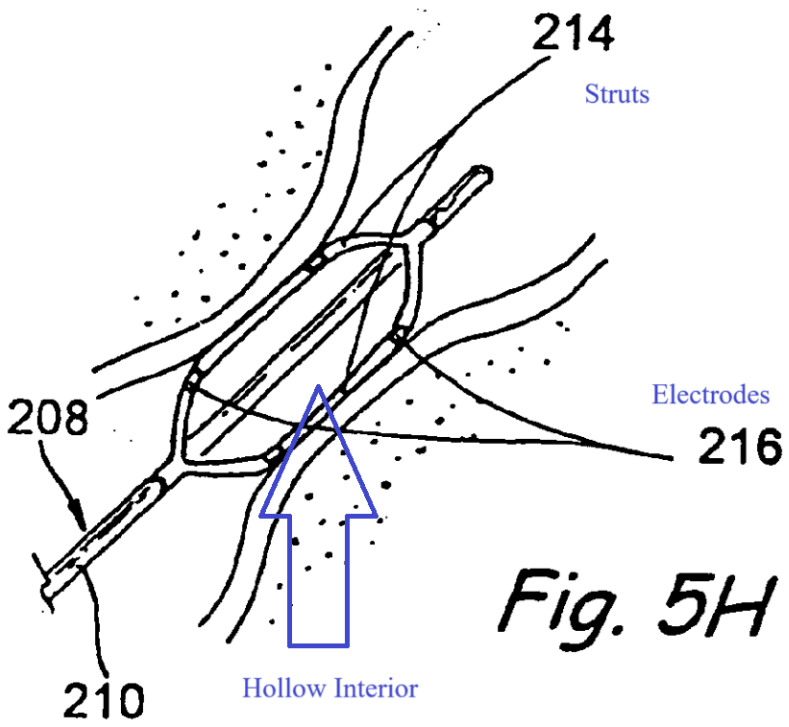

93. Makower FIG. 5H further depicts four electrodes, with two on each strut, as shown in annotated FIG. 5H below. Makower's electrodes, which are identified by number 216, are shown in ***orange***.

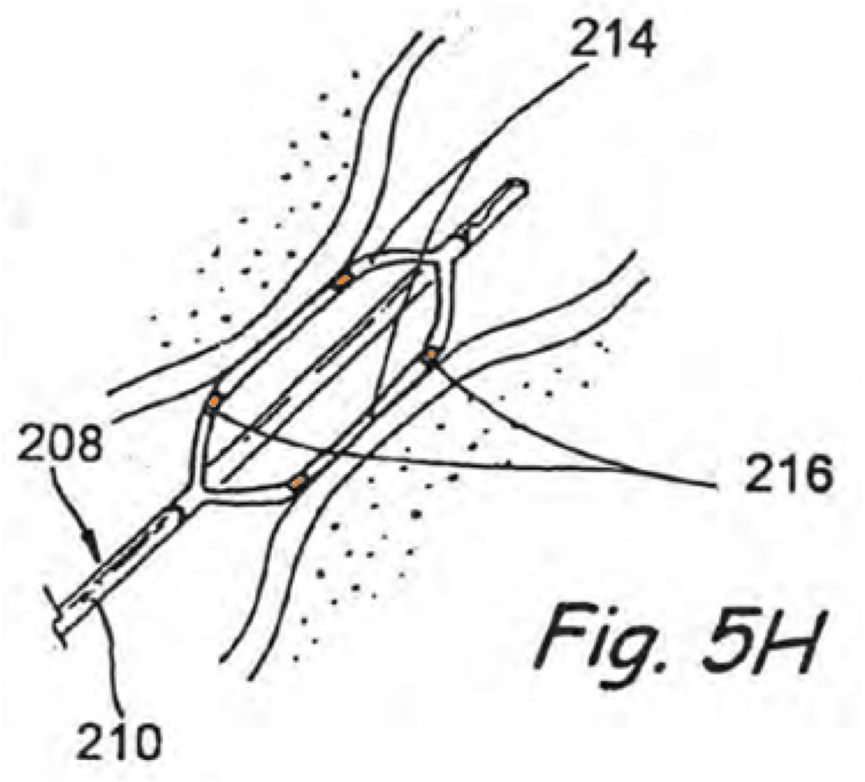

94. A POSITA would have understood the electrodes are ring electrodes surrounding the corresponding struts, because electrodes are depicted as spanning the entire width of each strut and are consistent with how those skilled in the art depict ring electrodes. Accordingly, a POSITA would have known that Makower's FIG. 5H electrodes were configured to emit energy about their entire circumference. I confirmed this understanding of Makower's FIG. 5H electrodes during my discussion with Dr. Marom Bikson, Ph.D., Biomedical Engineering, B.S. Biomedical Engineering with a concentration in Electrical Engineering.

95. A POSITA also would not have chosen Makower's FIG. 5H device due to the ring electrodes as well as the opening between the struts. Specifically, a

POSITA would expect that when Makower's FIG. 5H device is placed into the nasopharyngeal passage, fluids in that passage, such as bodily fluids (e.g., blood or mucus) or saline (if the passage is irrigated and cleaned out before or during treatment) will enter the hollow space between the struts. A POSITA would have understood that these fluids are electrolytic, meaning they are strong conductors of the electrical current (i.e., ions) exiting from Makower's ring electrodes.

96. Thus, POSITA would have expected that when current is applied to Makower's ring electrodes, instead of the current flowing towards the targeted tissue, it would predominantly flow into the electrolytic fluid located between Makower's struts. An example of this is shown in annotated FIG. 5H below. I confirmed this understanding with Dr. Bikson during our October 23, 2024 conversation. In addition, I note that the direction of ion flow shown in the annotated FIG. 5H below is an example of one direction the ions would flow. A POSITA would have understood that the ions can travel through the fluid between the struts in any direction from one electrode to another.

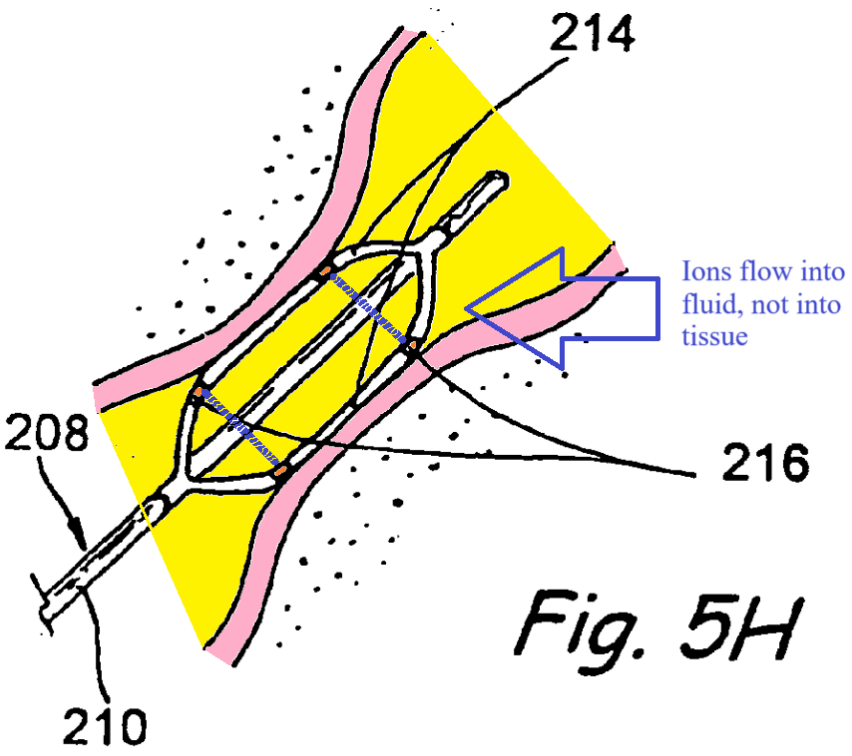

97. In view of the foregoing, a POSITA would not have been motivated to use Makower's FIG. 5H device because, as stated above, a POSITA would desire a device that can concentrate energy delivery specifically on the targeted tissue, while avoiding applying the energy to non-targeted tissue. This is especially important because under Petitioners' proposed combination, Makower's device would be applying enough energy to ablate, i.e., destroy tissue. A POSITA would not want to use a device which diverts the ions away from the targeted tissue and towards tissue that it does not want to destroy. A POSITA also would not want to inadvertently direct energy into an incorrect tissue or surface, which could cause medical adverse events and complications. I agree with Dr. Bikson that there is too much risk in

using Makower's device in the nasopharyngeal passage to treat any tissue, whether that be an obstruction or otherwise.

98. Accordingly, a POSITA would not have been motivated to combine Makower and Fang.

E. A POSITA Would Not Have Had a Reasonable Expectation of Success with Makower's FIG. 5H Device

99. I understand that Petitioners assert a POSITA would have a reasonable expectation of success in using Makower's FIG. 5H device to treat targeted tissue in the nasopharyngeal passage to treat perennial allergic rhinitis. For the reasons discussed above, I disagree.

100. Specifically, as I discussed above, there would be electrolytic fluid in the space around and/or between Makower's struts, and a POSITA would have expected ions emitted from Makower's electrodes to predominantly be drawn away from the target tissue and into this electrolytic fluid. In addition to this raising safety issues due to the diversion of energy to non-targeted tissue, a POSITA would have understood that it also raises efficacy concerns, because when the ions are diverted away from the target tissue, a POSITA would not have reasonably expected the device to ablate the target tissue. I confirmed this with Dr. Bikson as well during our October 23, 2024, call.

101. In view of the foregoing, it is my opinion that a POSITA would not have been motivated to combine Makower and Fang and further that a POSITA

would not have reasonably expected Makower's FIG. 5H device to effectively apply energy to treat target tissue as required by all Challenged Claims.

XI. MAKOWER'S DEVICE DOES NOT "CONCENTRATE ENERGY LATERALLY" AS PER CLAIM 22

102. Dependent claim 22 of the '675 patent requires that the treatment device include an "energy delivery element" and further requires that the energy delivery element is "configured to concentrate energy laterally relative to the distal portion of the device." I understand that Petitioners contend this is taught by Makower's FIG. 5H device. For the reasons explained below, I disagree.

103. Initially, I disagree with Petitioners in view of my opinions set forth above regarding the ions predominantly flowing away from the target tissue and instead into the electrolytic fluid between the struts.

104. Second, I disagree with Petitioners because, as discussed above, Makower discloses that its FIG. 5H device has ring electrodes, and a POSITA would understand that Makower's ring electrodes are not configured to concentrate energy laterally, but rather their exposed surfaces are configured to emit energy about their circumference. I confirmed this opinion with Dr. Bikson during our October 23, 2024 call.

105. I understand, however, that Petitioners contend Makower's electrodes are configured to concentrate energy laterally because Makower identifies a list of patents which with components that purportedly can be implemented into

Makower's "working devices," and one of the patents—Imran (Ex-1068) discloses electrodes that are configured to concentrate energy laterally. (Petition at 86.) I disagree with Petitioners.

106. First, Imran is one of twenty patents listed in paragraph [0164] of Makower, which Makower describes as showing "designs and constructions of…components and assemblies" purportedly known in the art that may be incorporated into "***some of the working devices*** shown in FIGS. 5A-5Y’’’’." I note that Makower does not tie any of these patents or components to Makower's FIG. 5H device. It is unclear why a POSITA would have looked to Imran as opposed to any other of the 20 patents.

107. In any event, a POSITA would have understood that Imran's electrodes are not configured to concentrate energy laterally. Petitioners identify annotated FIG. 1 of Imran (below) as disclosing the claimed electrodes.

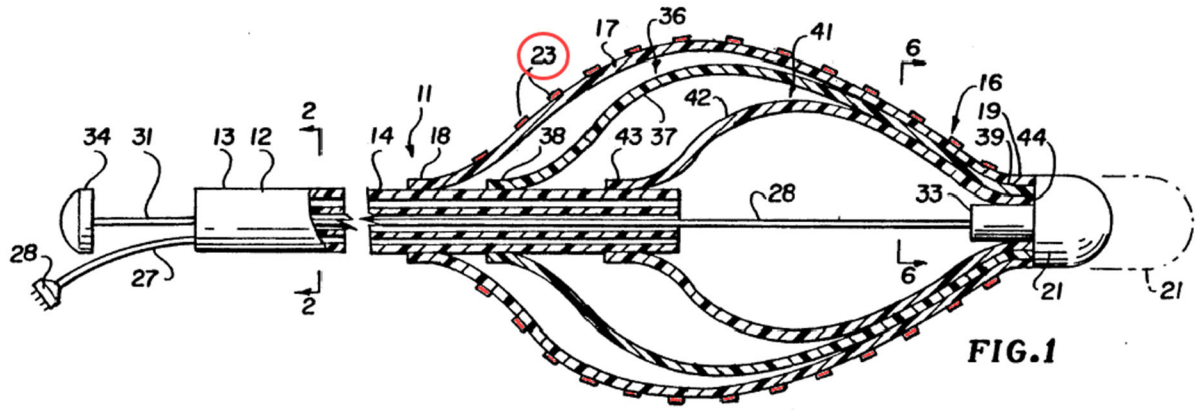

(Annotated FIG. 1 of Imran from Petition at 86.)

108. But Imran's electrodes are not configured to concentrate energy laterally. Specifically, Imran discloses that FIG. 1 "is a cross-sectional view of the distal extremity of an endocardial catheter for mapping and/or ablation…" As shown in FIG. 1, the electrodes extend above the surface of the struts, i.e., are not surrounded by an insulating material. Thus, a POSITA would have understood that the electrodes in Imran deliver energy in multiple directions, through each, exposed (i.e., non-insulated) surface, as shown in annotated FIG. 1 below.

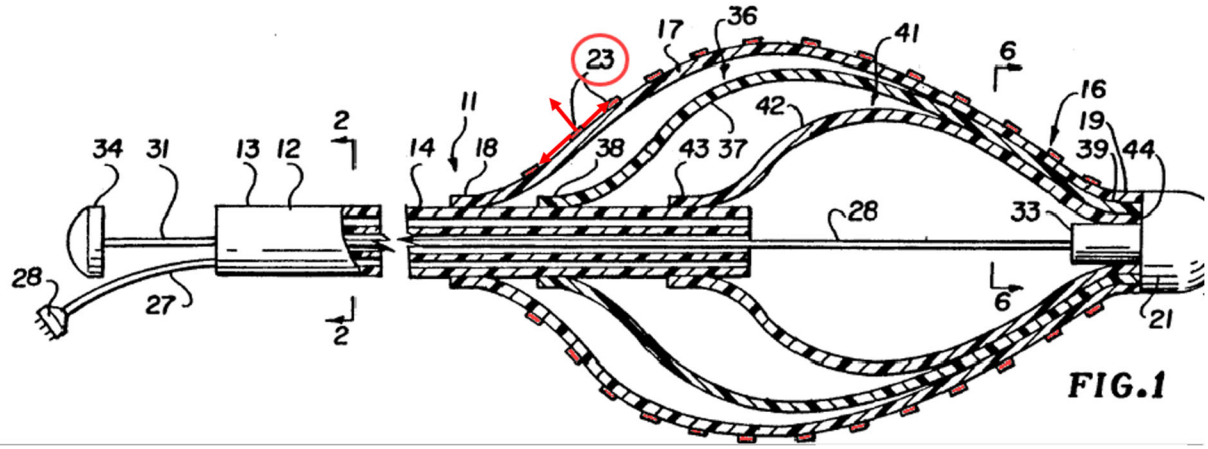

109. I understand that Petitioners concede that FIG. 5A of the '675 patent shows electrodes that concentrate energy laterally. I agree. In FIG. 5A, shown below, energy is only emitted through one exposed surface. The remaining electrode surfaces are insulated within the device. Thus, as shown in the table below, Imran's electrodes do not have the same configuration as the FIG. 5A electrodes in the '675 patent, and, therefore, a POSITA would not understand Imran's electrodes to be

configured to concentrate energy laterally.

'675 Patent: Lateral Energy Delivery Through Top Electrode Surface	Imran: Energy Delivery Through Multiple Exposed Electrode Surface
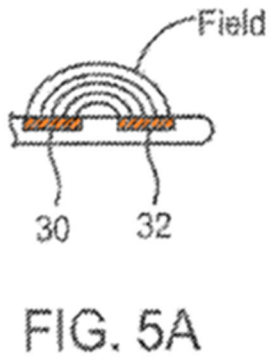 FIG. 5A	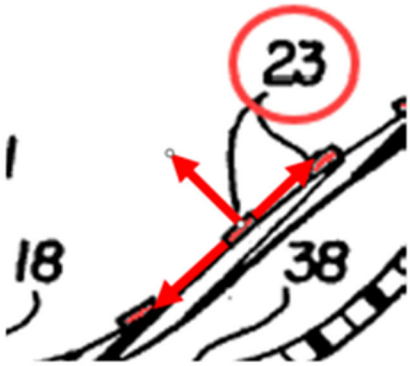

110. In addition, Imran's written specification does not describe the electrodes in FIG. 1 as concentrating energy laterally. Nor does it describe the electrodes as having the lateral surface configuration that a POSITA would understand could be configured to concentrate energy laterally.

111. Thus, in my opinion, the Makower-Fang combination does not disclose claim 22. I confirmed each of the above opinions regarding claim 22 with Dr. Bikson during our October 23, 2024 call.

XII. DECLARATION IN LIEU OF OATH

112. I hereby declare that all statements made herein of my own knowledge are true and that all statements made on information and belief are believed to be true; and further that these statements were made with the knowledge that willful false statements and the like so made are punishable by fine or imprisonment, or both, under § 1001 of Title 18 of the United States Code and that such willful false statements may jeopardize the validity of the application or any patent issued thereon. If called to testify as to the truth of the matters stated herein, I could and would testify competently.

113. I declare under penalty of perjury that the foregoing is true and correct.

October 25, 2024

Howard L Levine md

Howard L. Levine, M.D.

The Foundry, LLC Exhibit 2003, Page 65 of 65
Neurent Medical Inc. & Neurent Medical Ltd. v. The Foundry, LLC
IPR2024-00279