Trials@uspto.gov
571.272.7822

Paper No. 10
Filed: May 31, 2018

UNITED STATES PATENT AND TRADEMARK OFFICE

BEFORE THE PATENT TRIAL AND APPEAL BOARD

ACCLARENT, INC.,
Petitioner,

v.

FORD ALBRITTON, IV,
Patent Owner.

Case IPR2018-00268
Patent 9,011,412 B2

Before JOSIAH C. COCKS, BEVERLY M. BUNTING, and RICHARD H. MARSCHALL, *Administrative Patent Judges*.

MARSCHALL, *Administrative Patent Judge*.

DECISION
Denying *Inter Partes* Review
37 C.F.R. § 42.108

Neurent 1106
Neurent v. Foundry
IPR2024-00280

I. INTRODUCTION

Acclarent, Inc. ("Petitioner") filed a Petition for *inter partes* review of claims 8–13 of U.S. Patent No. 9,011,412 B2 (Ex. 1001, "the '412 patent"). Paper 1 ("Pet."), 24. Ford Albritton, IV ("Patent Owner") filed a Preliminary Response. Paper 8 ("Prelim. Resp."). Institution of an *inter partes* review is authorized by statute only when "the information presented in the petition . . . and any response . . . shows that there is a reasonable likelihood that the petitioner would prevail with respect to at least 1 of the claims challenged in the petition." 35 U.S.C. § 314(a); *see* 37 C.F.R. § 42.108. For the reasons set forth below, we conclude that the information presented in the Petition fails to establish a reasonable likelihood that Petitioner will prevail in showing the unpatentability of claims 8–13. Accordingly, we decline to institute an *inter partes* review.

A. Related Matters

Petitioner and Patent Owner identify the following proceeding in the U.S. District Court for the Northern District of Texas as a related matter: *Dr. Ford Albritton IV v. Acclarent, Inc.*, No. 3:16-cv-03340-D (filed Dec. 1, 2016). Pet. 5; Paper 4, 2. Claims 1–7 and 14–20 of the '412 patent—not challenged here—are the subject of a pending *inter partes* review, IPR2017-00498, instituted on July 10, 2017. *Id.*

B. The '412 Patent

The '412 patent is titled "APPARATUS, SYSTEM AND METHOD FOR MANIPULATING A SURGICAL CATHETHER AND WORKING DEVICE WITH A SINGLE HAND." Ex. 1001, (54). The '412 patent describes the functions performed by the handle structure in the following manner:

> The handle has a structure to allow a position of the guide catheter to be controlled by some or all of three fingers of one hand of an operator of the handle. The structure of the handle is adapted to permit the operator to position a thumb and index finger of the hand to manipulate a working device inserted into the lumen of the guide catheter, where the working device is manipulable via a portion of the working device immediately adjacent to the handle.

Id. at Abstract.

Figure 3 of the ’412 patent is reproduced below:

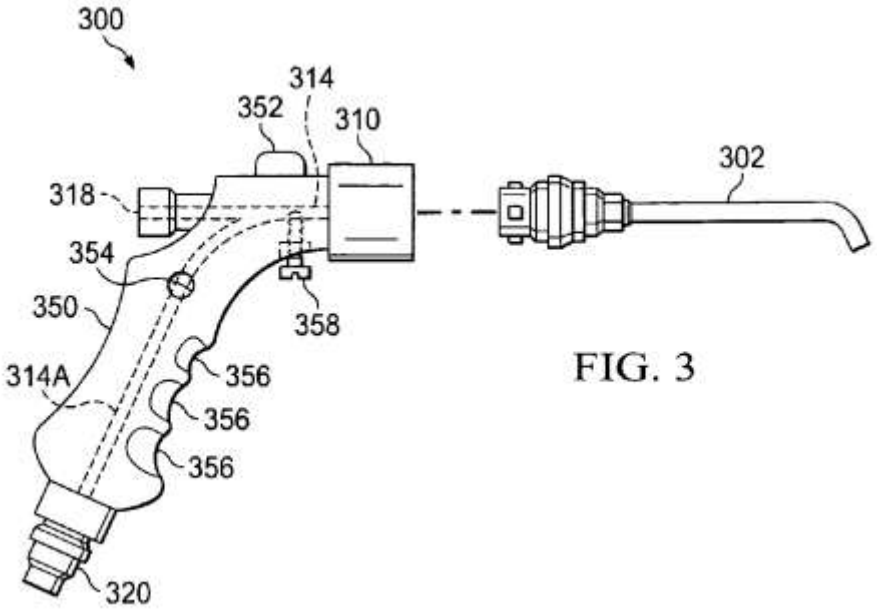

FIG. 3

Figure 3 shows surgical catheter 300 having handle 350 and guide 302. *Id.* at 3:51–56. Handle 350 includes opening 318, through which working devices, such as “an endoscope, guidewire or other working device may be inserted.” *Id.* at 4:4–9. Attaching a suction source at handle coupling 320 provides suction at the distal end of guide 302. *Id.* at 4:12–15. Opening 354 on handle 350 allows “the user to control the amount of suction present at the distal end of the guide 302.” *Id.* at 4:18–21.

The specification explains that the user holds handle 350 using "some or all of the small finger, the ring finger and the middle finger," while "[t]he fore finger and thumb are left free to manipulate a working device inserted into the opening 318." *Id.* at 4:62–5:3. The upper and lower portions of handle 350 form an angle that facilitates manipulation of the working device while simultaneously allowing the remaining fingers to control the position of guide 302. *Id.* at 5:8–18, 5:23–33.

C. Claims

Of the challenged claims, claim 8 is independent and is reproduced below:

> 8. A method comprising:
>
> inserting a guide catheter through an external body passage of a subject, wherein the guide catheter comprises a substantially rigid shaft, a proximal opening, a distal opening and a lumen extending between the proximal opening and the distal opening;
>
> coupling a source of suction to the lumen through the handle;
>
> inserting a working device through a handle opening in a handle coupled to the guide catheter and into the lumen of the guide catheter;
>
> controlling a position of the guide catheter using the handle that is formed to allow the position of the guide catheter to be controlled by some or all of three fingers of a hand, while substantially simultaneously manipulating the working device with a thumb and index finger of the hand via a portion of the working device immediately adjacent to the handle opening; and
>
> controlling the position of the guide catheter using the handle, while substantially simultaneously controlling, by one of the thumb or index finger, an amount of suction coupled to the distal opening of the lumen.

Ex. 1001, 6:34–55.

D. The Prior Art

Petitioner relies on the following prior art references:

Reference	Date	Exhibit No.
U.S. Patent Pub. No. 2007/0250105 A1 issued to Ressemann et al. ("Ressemann")	Oct. 25, 2007	1006
U.S. Patent No. 8,747,389 B2 issued to Goldfarb et al. ("Goldfarb")	June 10, 2014	1007
U.S. Patent Pub. No. 2006/0063973 A1 issued to Makower et al. ("Makower")	Mar. 23, 2006	1008
U.S. Patent No. 4,915,691 issued to Jones et al. ("Jones")	Apr. 10, 1990	1009

E. Asserted Grounds of Unpatentability

Petitioner challenges claims 8–13 based on the following grounds (Pet. 24):

Ground No.	Reference(s)	Basis	Challenged Claims
1	Ressemann and Goldfarb	§ 103	8 and 11–13
2	Makower and Jones	§ 103	8–13

II. ANALYSIS

A. Claim Construction

In an *inter partes* review, a claim in an unexpired patent shall be given its broadest reasonable construction in light of the specification of the patent in which it appears. 37 C.F.R. § 42.100(b); *Cuozzo Speed Techs., LLC v. Lee*, 136 S. Ct. 2131, 2144–46 (2016) (upholding the use of the broadest reasonable interpretation standard). Consistent with the broadest reasonable construction, claim terms are presumed to have their ordinary and customary meaning as understood by a person of ordinary skill in the art in the context

of the entire patent disclosure. *In re Translogic Tech., Inc.*, 504 F.3d 1249, 1257 (Fed. Cir. 2007).

Petitioner proposes explicit constructions for the claim limitations "formed to allow" and "manipulating the working device with a thumb and index finger." Pet. 15–21. Patent Owner does not address claim construction in its Preliminary Response. We need not provide an explicit construction for the claim terms identified by Petitioner in order to resolve the issues presented in the Petition. *See Vivid Techs., Inc. v. Am. Sci. & Eng'g, Inc.*, 200 F.3d 795, 803 (Fed. Cir. 1999) ("[O]nly those terms need be construed that are in controversy, and only to the extent necessary to resolve the controversy.").

B. Person of Ordinary Skill in the Art

Petitioner contends that a person of ordinary skill in the art "would have had at least a bachelor's degree in either electrical engineering or mechanical engineering, or equivalent, with at least four years' experience designing surgical instruments, or a doctor of medicine (M.D.) and at least 2 years of experience with laparoscopic or endoscopic surgical procedures." Pet. 13. Patent Owner does not address Petitioner's proposal. We adopt Petitioner's proposal for purposes of this Decision. Additionally, we note that the prior art of record in this proceeding is indicative of the level of ordinary skill in the art. *See Okajima v. Bourdeau*, 261 F.3d 1350, 1355 (Fed. Cir. 2001); *In re GPAC Inc.*, 57 F.3d 1573, 1579 (Fed. Cir. 1995).

C. Ground 1 — Obviousness Based on Ressemann and Goldfarb

Petitioner alleges that claims 8 and 11–13 are unpatentable based on Ressemann and Goldfarb under 35 U.S.C. § 103(a). Pet. 24–42. We determine, on this record, that Petitioner has not established a reasonable

likelihood of prevailing on its assertion that any of claims 8 and 11–13 would have been obvious.

1. Principles of Law

A claim is unpatentable under 35 U.S.C. § 103(a) if the differences between the claimed subject matter and the prior art are such that the subject matter, as a whole, would have been obvious at the time the invention was made to a person having ordinary skill in the art to which said subject matter pertains. *KSR Int'l Co. v. Teleflex Inc.*, 550 U.S. 398, 406 (2007). The question of obviousness is resolved on the basis of underlying factual determinations, including: (1) the scope and content of the prior art; (2) any differences between the claimed subject matter and the prior art; (3) the level of skill in the art; and (4) where in evidence, so-called secondary considerations. *Graham v. John Deere Co. of Kansas City*, 383 U.S. 1, 17–18 (1966).

As the Supreme Court explained in *KSR*, an invention "composed of several elements is not proved obvious merely by demonstrating that each of its elements was, independently, known in the prior art." 550 U.S. at 418. Rather, "it can be important to identify a reason that would have prompted a person of ordinary skill in the relevant field to combine the elements in the way the claimed new invention does." *Id.* In other words, "there must be some articulated reasoning with some rational underpinning to support the legal conclusion of obviousness." *Id.* (quoting *In re Kahn*, 441 F.3d 977, 988 (Fed. Cir. 2006)). Accordingly, the U.S. Court of Appeals for the Federal Circuit has made clear that a petitioner in an *inter partes* review proceeding cannot "satisfy its burden of proving obviousness" by "employ[ing] mere conclusory statements" and "must instead articulate

specific reasoning, based on evidence of record" to support an obviousness determination. *In re Magnum Oil Tools Int'l*, 829 F.3d 1364, 1380–81 (Fed. Cir. 2016).

We analyze this ground based on obviousness in accordance with the above-stated principles.

2. Overview of Ressemann

Ressemann discloses "[a] method of treating a constricted sinus passageway" that employs an "elongate member having an inflation member." Ex. 1006, Abstract. Expansion of the inflation member expands at least a portion of the constricted sinus passageway. *Id.*

Ressemann's Figures 11A–11C depict wire movement guide 130 "used to facilitate one-handed movement of both the wire guide 24 and guide catheter 18." *Id.* ¶ 117. "The wire movement guide 130 may be formed as a recessed handle or the like." *Id.*

Ressemann's Figure 11D is reproduced below.

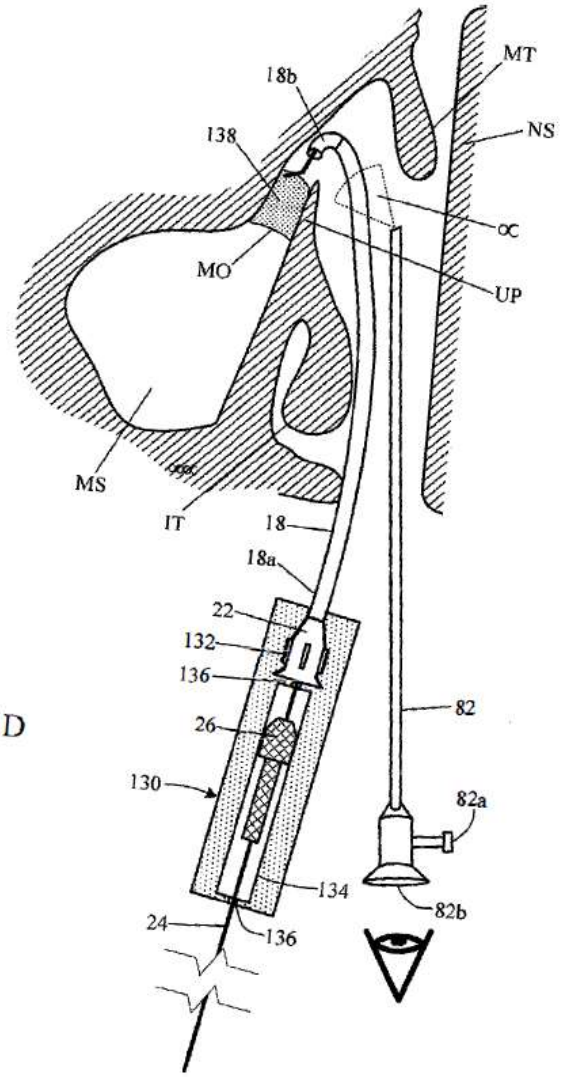

FIG. 11D

Figure 11D depicts use of wire movement guide 130 to move guide catheter 18 into a desired position. *Id.* ¶ 119. Wire movement guide 130 includes wire recess 136 for receiving wire guide 24. *Id.* ¶ 117. Wire movement guide 130 also includes recess 134 that receives steering device 26. *Id.* The structure allows a user to use wire movement guide 130 to move guide catheter 18 "while simultaneously advancing and/or rotating wire guide 24 with a single hand." *Id.* ¶ 119.

3. Overview of Goldfarb

Goldfarb discloses devices for dilating passageways within the ear, nose, and throat. Ex. 1007, Abstract. Goldfarb discloses a "dilation catheter device . . . that facilitates ease of use by the operator and, in at least some cases, allows the dilation procedure to be performed by a single operator." *Id.* The dilation catheter may be used in conjunction with an endoscope, and "an optional handle may be used to facilitate grasping or supporting a [dilation catheter] as well as another device (e.g., an endoscope) with a single hand." *Id.*

Goldfarb's Figures 3A and 8A are reproduced below.

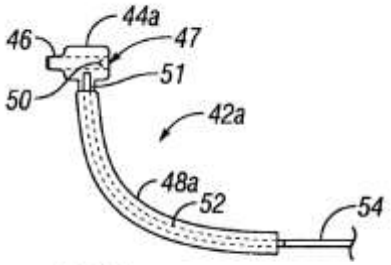

FIG. 3A

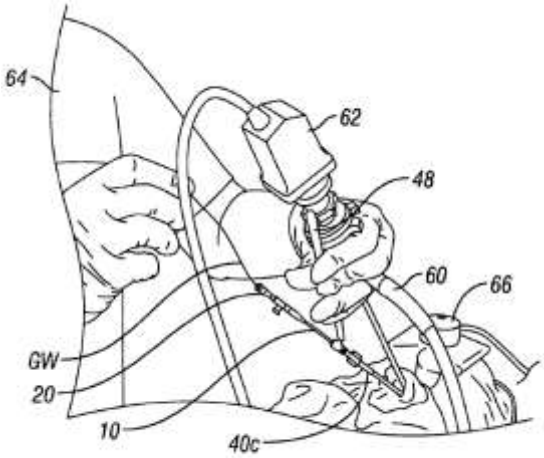

FIG. 8A

Figure 3A depicts handle 42a having fluid channel 52 extending from lumen 47 downwardly through head 44a and through handle member 48a. *Id.* at 11:14–17. "[I]rrigation and/or suction tube 54 may be attached" to handle member 48a. *Id.* at 11:19–21. In some embodiments, handle 48 "may have a suction hole where the user must cover the suction hole to actuate suction through the optional handle 42." *Id.* at 11:6–12. Figure 8A, reproduced above, depicts an example of how "handle 42 may be used to

facilitate concurrent holding of an endoscope as well as the guide catheter" with a single hand of the operator. *Id.* at 11:50–54. In Figure 8A, an operator holds endoscope 60 and handle member 48 of guide catheter 40c in one hand, while manipulating the guidewire GW and dilation catheter 10 in the other hand. *Id.* at 11:58–12:3. An operator can bend malleable handle member 48 to form an angle between the shaft of guide catheter 40c and endoscope 60 to facilitate the operation. *Id.* at 12:17–32.

4. Discussion

With respect to independent claim 8, Petitioner relies on the disclosures of Ressemann and Goldfarb and the declarations of Howard Levine, M.D. and Randy Kesten in support of its allegations. *See* Pet. 24–42; Ex. 1004 ("Levine Declaration" or Levine Decl."); Ex. 1005 ("Kesten Declaration" or "Kesten Decl."). For example, Petitioner relies on Ressemann as disclosing the preamble (Pet. 24 (citing Levine Decl. ¶ 52; Kesten Decl. ¶ 84)) and "inserting a guide catheter" limitation (Pet. 24–26 (citing Levine Decl. ¶¶ 54–55; Kesten Decl. ¶¶ 28, 86–87; Ex. 1006 ¶¶ 12, 99, 101, Fig. 11D)). Petitioner also relies on Ressemann as disclosing the "inserting a working device through a handle opening" limitation (*id*. at 31–33 (citing Levine Decl. ¶¶ 58–59; Kesten Decl. ¶¶ 89–90; Ex. 1006 ¶ 117, 11D)); and the limitation requiring "controlling a position of the guide catheter . . . while substantially simultaneously manipulating the working device with a thumb and index finger of the hand." *Id.* at 33–34 (citing Levine Decl. ¶¶ 60, 62–65, 91, 93; Kesten Decl. ¶¶ 91–95; Ex. 1006 ¶ 119, 11D)).

For the limitation requiring "coupling a source of suction to the lumen through the handle," Petitioner relies on Goldfarb's disclosure of a suction

tube attached to Goldfarb's handle to suction fluid through a fluid channel. *Id.* at 26 (citing Ex. 1007, 11:19–22). Petitioner argues that "[w]hile Ressemann does not teach the use of suction, it would have been obvious to modify Ressemann in view of Goldfarb to couple a source of suction to the lumen through the handle for suctioning fluid through the lumen of the guide catheter." *Id.* at 26. Petitioner also relies on Goldfarb as disclosing the limitation requiring "controlling the position of the guide catheter using the handle, while substantially simultaneously controlling, by one of the thumb or index finger, an amount of suction coupled to the distal opening of the lumen." *Id.* at 35. According to Petitioner, one of skill in the art "would have found it obvious to add a suction vent or hole in the handle (wire movement guide 130) of Ressemann, as taught by Goldfarb," and "would have controlled the guide catheter and simultaneously controlled suction with the thumb . . . [and] index finger of the same hand." *Id.* (citing Levine Decl. ¶¶ 66–68, Kesten Decl. ¶¶ 96–97).

In Patent Owner's Preliminary Response, Patent Owner argues that the references teach away from the combination and render the references inoperable. Prelim. Resp. 24–27. More specifically, Patent Owner argues that "it is impossible for the combination of Ressemann and Goldfarb to 'coupl[e] a source of suction to the lumen through the handle' . . . because suction cannot go through solid material" forming Ressemann's handle. *Id.* at 25. Patent Owner also argues that Petitioner relies on impermissible hindsight and conclusory statements to render the claims invalid. *Id.* at 28–33. For example, Patent Owner refers to Petitioner's repeated reference to what one of ordinary skill in the art "could have" done, rather than focus on why one would have combined the references to render the claimed method

obvious, raising "a specter of impermissible hindsight bias." *Id.* at 31. Finally, Petitioner argues that objective indicia of nonobviousness support a conclusion of nonobviousness. *Id.* at 33–38.

After consideration of the parties' arguments and evidence, we are not persuaded that Petitioner has established sufficiently how Ressemann and Goldfarb would have been combined to arrive at the claimed invention, and why one of skill in the art would have made the combination in a manner that renders the claimed method obvious. The lack of explanation and evidence are most apparent in relation to the limitations requiring "coupling a source of suction to the lumen through the handle" and "controlling . . . the guide catheter . . . while substantially simultaneously controlling, by one of the thumb or index finger, an amount of suction."

Regarding the "coupling a source of suction" limitation, Petitioner acknowledges that Ressemann does not mention suction, and argues that adding the suction of Goldfarb remedies this deficiency, but does not explain adequately how one of ordinary skill in the art would incorporate the structure of Goldfarb into Ressemann's structure. *See* Pet. 26–31. For example, Petitioner relies on Goldfarb's "suction tube 54," but Petitioner fails to explain adequately how it proposes to add such a tube to Ressemann's handle to provide suction. Pet. 26, 28. The Petition also alleges that the "addition of a suction hole, as taught by Goldfarb, to the handle of Ressemann would allow the user to simply position the thumb or finger of the hand holding the device over the hole to control suction, while simultaneously controlling the position of the guide catheter." *Id.* at 30–31 (citing Levine Decl. ¶ 57). That statement is not persuasive because it does not describe how such a suction hole would have been added to Ressemann

to couple a suction source to Ressemann's handle. *See* 37 C.F.R. § 42.65(a) ("Expert testimony that does not disclose the underlying facts or data on which the opinion is based is entitled to little or no weight.").

The prior art does not fill these gaps, and instead includes structural differences that underscore the need for further evidence and analysis. Ressemann does not even mention suction. Goldfarb discloses a suction tube and the use of a hole relied on by Petitioner, but does not depict the hole in the related drawings or describe its location on the handle. *See* Ex. 1007, 11:6–34, Figs. 3, 3A–3C. Moreover, Goldfarb's handle 48 appears to be a hollow, "shapeable" tube surrounding suction tube 54. *See id.* at 10:49–11:12, 11:19–22, Figs. 3, 3A–3C. Ressemann's handle (wire movement guide 130), as Patent Owner points out, employs a half-circle shape with open recess 134 that accommodates steering device 26. Ex. 1006 ¶¶ 117, 119, Figs. 11B, 11D; *see also* Prelim. Resp. 24–25. It is not apparent from the Petition, without further explanation or evidence, how simply adding a hole to Ressemann's half-circle wire movement guide 130 adds suction to the device. Similarly, it is not apparent how Petitioner proposes to add Goldfarb's suction tube 54 to Ressemann's structure, especially when the recess 134 within Ressemann's "handle" already houses steering device 26. *See* Ex. 1006 Fig. 27D.

The accompanying expert declarations similarly lack any detailed analysis of the structure resulting from the proposed combination. *See* Levine Decl. ¶ 57; Kesten Decl. ¶ 88. Notably, Dr. Levine relies on Mr. Kesten's opinion that the modification of Ressemann's handle to include the valve or suction hole of Goldfarb would have been routine. Levine Decl. ¶ 57. Mr. Kesten, however, refers to adding Goldfarb's structure to "the

guide catheter of Ressemann," even though claim 8 requires coupling suction to the *handle*, not the separately claimed *guide catheter*. Kesten Decl. ¶ 88.

The lack of detail provided regarding how to modify Ressemann to couple a suction source to its handle creates additional problems when considering the limitation requiring "substantially simultaneously controlling, by one of the thumb or index finger, an amount of suction." The manner and location of the added suction capability necessarily impacts the ability to control suction using specific fingers while simultaneously controlling the guide catheter. The Petition does not explain adequately how the resulting structure allows a user to perform this step of the claimed method. *See* Pet. 35–38. Mr. Kesten opines that one of skill in the art "would have understood that Goldfarb's suction hole could have been placed anywhere on the handle of Ressemann to control suction through the guide catheter, and that, in accordance with Goldfarb, the thumb or index finger would have been used to control an amount of suction." Kesten Decl. ¶ 97. A hole alone does not provide suction, and to the extent that Petitioner suggests adding Goldfarb's suction tube 54 in fluid communication with a hole within Ressemann's handle, the theory and details are not adequately laid out in the Petition and accompanying declarations. Moreover, without those structural details regarding the proposed combination, merely surmising that one "would have understood" that the hole "could have been placed anywhere" to allow one to practice the claimed method is too thin a

reed to support a conclusion of obviousness here.[1] Rather, as Patent Owner asserts, the analysis suggests that improper hindsight was used rather than teachings from the prior art.

As noted above, a petitioner in an *inter partes* review proceeding cannot "satisfy its burden of proving obviousness" by "employ[ing] mere conclusory statements" and "must instead articulate specific reasoning, based on evidence of record" to support an obviousness determination. *Magnum Oil*, 829 F.3d at 1380–81. The "factual inquiry" into the reasons for "combin[ing] references must be thorough and searching, and the need for specificity pervades . . . ." *In re Nuvasive, Inc.*, 842 F.3d 1376, 1381–82 (Fed. Cir. 2016) (internal quotations and citations omitted). A determination of obviousness cannot be reached where the record lacks "explanation as to *how* or *why* the references would be combined to produce the claimed invention." *Trivascular*, 812 F.3d at 1066; *see Nuvasive*, 842 F.3d at 1382–85; *Magnum Oil*, 829 F.3d at 1380–81.

---

[1] In a similar vein, Dr. Levine opines that one "adding Goldfarb's suction hole to Ressemann would have controlled the guide catheter and simultaneously controlled suction with the thumb or index finger of the same hand" because "[t]hat would have been the . . . motivation to add the hole to the handle." Levine Decl. ¶ 68. This opinion lacks any citation for support and, like Mr. Kesten's opinion, fails to explain how the general reference to adding a hole to Ressemann adds suction to Ressemann in a manner that allows for simultaneous suction control using a thumb or index finger while manipulating the guide catheter. *See id.* Without "a reasoned explanation that avoids conclusory generalizations," Dr. Levin's testimony, as well as Mr. Kesten's, is not sufficient. *See Arendi S.A.R.L. v. Apple Inc.*, 832 F.3d 1355, 1362 (Fed. Cir. 2016) (quoting *Perfect Web Techs., Inc. v. InfoUSA, Inc.*, 587 F.3d 1324, 1329 (Fed. Cir. 2009)).

We are not persuaded by Petitioner's argument and evidence that claim 8 would have been obvious based on Ressemann and Goldfarb. Each of dependent claims 11–13 depends directly or indirectly from independent claim 8. Petitioner's analyses of the dependent claims do not cure the deficiencies noted above. Therefore, for the same reasons as discussed with respect to claim 8, our determination concerning the insufficiency of Petitioner's evidence applies equally to the arguments addressed to dependent claims 11–13.

D. Ground 2 — Obviousness Based on Makower and Jones

Petitioner alleges claims 8–13 are unpatentable based on Makower and Jones under 35 U.S.C. § 103(a). Pet. 42–59. We determine, on this record, that Petitioner has not established a reasonable likelihood of prevailing on its assertion that any of claims 8–13 would have been obvious.

1. Overview of Makower

Makower discloses devices "for treating disorders of the ear, nose, throat, . . . [and] . . . sinuses" and "hand held devices having pistol type grips and other handpieces." Ex. 1008, Abstract. Makower's Figure 27C is reproduced below.

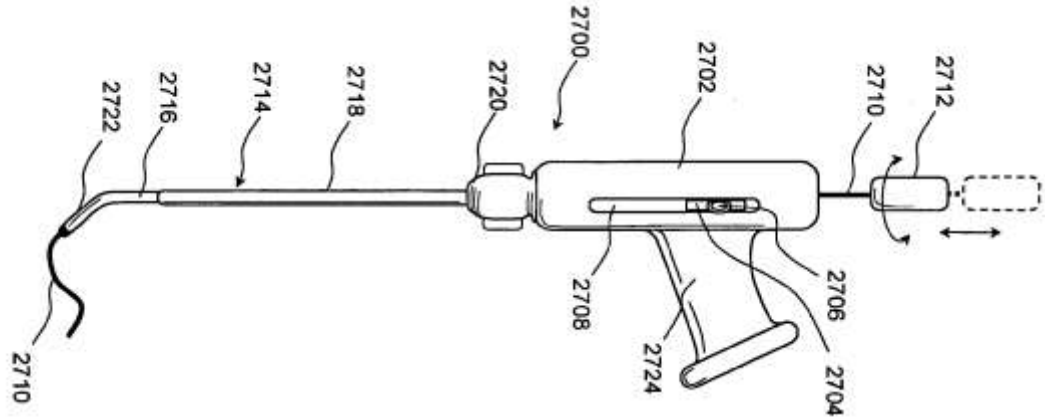

Fig. 27 C

Figure 27C depicts guidewire 2710 introduced through surgical hand tool 2700. *Id.* ¶ 223. A user can navigate guidewire 2710 through a patient's anatomy by using torqueing device 2712. *Id.* Proximal body 2702 includes handle 2724, and a distal region of proximal body 2702 includes a "suitable hub that allows a guide catheter 2714 to attach to proximal body 2702." *Id.* ¶ 222.

Makower also contemplates the use of suction through the distal end of the various guide catheters disclosed in Makower, "unless to do so would render the device unuseable for its intended purpose." *Id.* ¶ 167. When describing suction, Makower refers to embodiments shown in Figures 8A and 9. *Id.* ¶¶ 167, 170, Figs. 8A, 9.

2. Overview of Jones

Jones discloses a "self-contained hand held medical aspirating device." Ex. 1009, Abstract. Jones refers to the device as a "medical suction apparatus" connected to a vacuum source with vacuum supply tube 15. *Id.* at 1:9, 3:48–50.

Figure 2 of Jones is reproduced below.

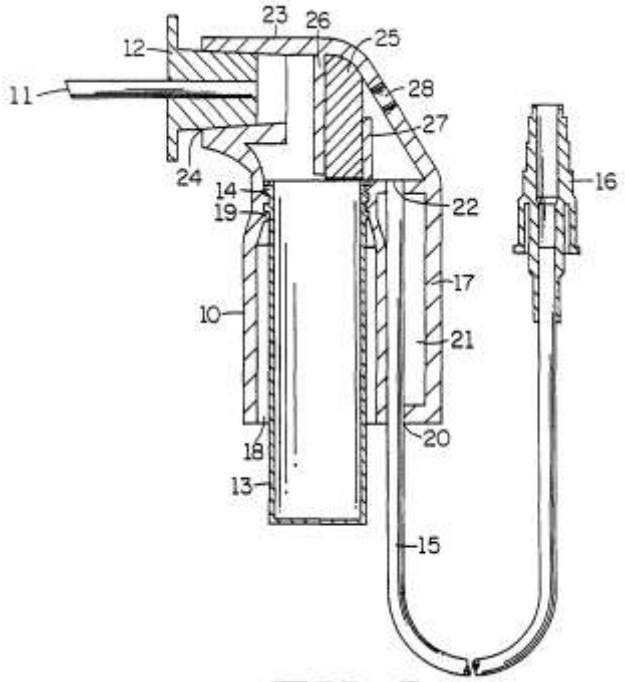

FIG. 2

Figure 2 depicts catheter 11, vacuum line 15, and thumb control hole 28. *Id.* at 4:21–23. Jones discloses a device that, when in use, positions a user's thumb near thumb control hole 28. *Id.* at 4:20–22, Fig. 2. When a user desires suction at the end of catheter 11, thumb control hole 28 is covered by the thumb. *Id.* at 4:26–30.

3. Discussion

With respect to claim 8, Petitioner relies on Makower as disclosing all of the limitations with the exception of "controlling the position of the guide catheter using the handle, while substantially simultaneously controlling, by one of the thumb or index finger, an amount of suction." Pet. 42–53. For that limitation, Petitioner relies on Jones, which discloses thumb control hole 28. *Id.* at 50 (citing Ex. 1009, 4:35–38). Petitioner notes that Makower itself suggests the use of suction, Jones teaches control of suction while manipulating a guide catheter, and Jones stresses the advantages of single-

handed operation. *Id.* at 50–52 (citing Ex. 1008 ¶¶ 167, 170; Ex. 1009, 1:26–28, 2:5–13, 2:49–50, 2:52–54, 3:17–19, 4:35–38). According to Petitioner, it would have been obvious to one of ordinary skill in the art "to include a suction hole in the handle [of Makower] at a location that would allow for control using the thumb, as taught by Jones." *Id.* at 52 (citing Levine Decl. ¶¶ 103–104; Kesten Decl. ¶ 132). Petitioner contends that the "addition of a thumb hole in the handle would have necessarily resulted in the user controlling the guide catheter while simultaneously controlling, by the thumb, an amount of suction coupled to the distal opening of the lumen." *Id.* (citing Levine Decl. ¶ 103).

Patent Owner raises similar arguments in the context of Makower and Jones as it did with respect to the proposed combination of Ressemann and Goldfarb. Prelim. Resp. 27–38. For example, Patent Owner argues that the combination of Makower and Jones would render Makower inoperable. *Id.* at 28 (citing Levine Decl. ¶ 118; Kesten Decl. ¶¶ 132–134; Ex. 1009 ¶ 149). According to Patent Owner, the location of the thumb hole in Jones at the rear of the handle occupies the same space as the hub in Makower that receives the guidewire, and the guidewire would block access to the opening for use as a suction-creating thumb hole as in Jones. *Id.* Attempting to use the hub to control suction would also tend to dislodge the guidewire from its intended location, contrary to the purpose of Makower, in Patent Owner's view. *Id.* Patent Owner further argues that the Petition and related declarations rely on impermissible hindsight and conclusory statements, and that objective indicia support a conclusion of nonobviousness. *Id.* at 29–38.

Petitioner's analysis and evidence with respect to the proposed combination of Makower and Jones suffers from several of the same

problems discussed above with respect to the proposed combination of Ressemann and Goldfarb. For example, Petitioner seems to assume that the combination of Jones's thumb hole with Makower's device would be routine, but never describes precisely how the structures would have been combined, and where the thumb hole would be located. *See* Pet. 50–53. Petitioner merely states that it would have been obvious to add a suction hole "at a location that would allow for control using the thumb," but does not describe that location or its impact on the existing Makower structure. Pet. 52. Compounding the confusion regarding the nature of the combined structure, Petitioner relies on Makower's structure for providing a suction source, but relies only on Jones, without mentioning Makower's suction structure, in relation to controlling the suction using one of the thumb and index finger. *See* Pet. 44–45, 50–53. The resulting structure presumably would include Makower's lumen containing the guidewire and some other structure tied to a suction source and a thumb hole while communicating with Makower's lumen. Such details are not included in the Petition. In addition, in such a configuration, one may need to take into account the opening for the guidewire and its impact on the suction function. The Petition does not provide these details or explanations, or explain adequately why it would be obvious to make all of these accommodations for a thumb hole of Jones, when Makower already allows for suction without a thumb hole.

The references themselves do not supply the missing information. Makower suggests the use of suction generally, but notes that adding suction only makes sense if doing so would not "render the device unuseable [sic] for its intended purpose." Ex. 1008 ¶ 167. Makower then describes the use

of suction with reference to embodiments distinct from the embodiment shown in Figures 27B and 27C that Petitioner relies upon. *Id.* ¶¶ 167, 170 (referring to suction in connection with Figures 8A and 9), Figs. 8A, 9, 27B, 27C. To the extent that the embodiments shown in Figures 27B and 27C can incorporate suction, that function may be accomplished by removing the guidewire and simply applying suction to the hole at the back of the device. *See id.* ¶ 16 (describing embodiments that include guidewires passing through a lumen as permitting "fluids to be infused or suction applied through that lumen"); Pet. 44 (citing Ex. 1008 ¶ 16). Such an arrangement would not involve controlling suction using a thumb or index finger. Makower's lack of disclosure regarding how it might apply suction to the embodiment Petitioner relies upon (in Figures 27B, 27C), underscores the need for further explanation and evidence from Petitioner. Jones discloses the use of suction using a thumb control hole, but does not disclose how such a device would work if it already included a lumen for a guidewire and a different source of suction from that contemplated by Jones.

Further, Petitioner's declarants do not fill the explanatory gaps left by the Petition. Mr. Kesten opines that the Jones thumb hole would have motivated one of ordinary skill in the art "to include an opening adapted to permit control of the amount of suction coupled to the distal opening of the lumen, and could have easily implemented such a modification . . . [of] Makower's device." Kesten Decl. ¶ 136. This statement is not persuasive because it does not account for Makower's existing guidewire, presumably occupying the same lumen used for suction and with its own opening at the proximal end of Makower's device that could impact suction capability. *See* Ex. 1008 Fig. 27C; Prelim. Resp. 28. Mr. Kesten also fails to describe how

one would "easily" modify Makower to accommodate such a thumb hole and provide suction given Makower's existing structure and suction source. *Id.* Dr. Levine merely relies on Mr. Kesten's opinions in this regard, and does not explain how the combination would be made or how it would operate. Levine Decl. ¶ 104 ("I understand from Mr. Kesten that adding a thumb port or vent, such as the one disclosed by Jones, to Figure 27C of Makower would have been routine and obvious. Kesten Declaration, ¶ 136.").

In short, the lack of sufficient argument and credible evidence fails to convince us that it would have been obvious to add a thumb hole to Makower's structure, when Makower already discloses the use of suction without the use of such a thumb hole. Without an adequate basis to conclude that it would have been obvious to combine the disparate structures, we are not persuaded that it would have been obvious to perform the claimed method steps of claim 8, which require the use of specific fingers to perform specific functions with the structure.

Accordingly, we are not persuaded by Petitioner's argument and evidence that claim 8 would have been obvious based on Makower and Jones. Each of dependent claims 9–13 depends directly or indirectly from independent claim 8. Petitioner's analyses of the dependent claims do not cure the deficiencies noted above. Therefore, for the same reasons as discussed with respect to claim 8, our determination concerning the insufficiency of Petitioner's evidence applies equally to the arguments addressed to dependent claims 9–13.

III. CONCLUSION

For the foregoing reasons, we are not persuaded that the Petition establishes a reasonable likelihood that Petitioner would prevail in any of its challenges to claims 8–13 of the ’412 patent.

IV. ORDER

In consideration of the foregoing, it is hereby ordered that the Petition is *denied*, and no trial is instituted.

For PETITIONER:

Lisa Adams
ladams@mintz.com

Peter Cuomo
pjcuomo@mintz.com

For PATENT OWNER:

Ashley Moore
amoore@mckoolsmith.com