US008939970B2

(12) **United States Patent**
Stone et al.

(10) **Patent No.: US 8,939,970 B2**
(45) **Date of Patent: *Jan. 27, 2015**

(54) **TUNED RF ENERGY AND ELECTRICAL TISSUE CHARACTERIZATION FOR SELECTIVE TREATMENT OF TARGET TISSUES**

(75) Inventors: **Corbett W. Stone**, San Diego, CA (US); **Michael F. Hoey**, Shoreview, MN (US); **Tom A. Steinke**, San Diego, CA (US); **Raphael M. Michel**, San Diego, CA (US); **Arthur G. Blanck**, Ramona, CA (US); **Marlene Kay Truesdale**, Monument, CO (US); **Bret Herscher**, Cupertino, CA (US)

(73) Assignee: **Vessix Vascular, Inc.**, Laguna Hills, CA (US)

(*) Notice: Subject to any disclaimer, the term of this patent is extended or adjusted under 35 U.S.C. 154(b) by 0 days.

This patent is subject to a terminal disclaimer.

(21) Appl. No.: **13/408,135**

(22) Filed: **Feb. 29, 2012**

(65) **Prior Publication Data**

US 2012/0157989 A1 Jun. 21, 2012

Related U.S. Application Data

(63) Continuation of application No. 11/975,651, filed on Oct. 18, 2007.

(60) Provisional application No. 60/921,973, filed on Apr. 4, 2007, provisional application No. 60/852,787, filed on Oct. 18, 2006.

(51) **Int. Cl.**
A61B 18/18 (2006.01)
A61B 18/14 (2006.01)

(Continued)

(52) **U.S. Cl.**
CPC ***A61B 18/1492*** (2013.01); ***A61B 18/1206*** (2013.01); ***A61M 5/14*** (2013.01);

(Continued)

(58) **Field of Classification Search**
USPC 606/33, 41, 47–50; 607/101–102, 122; 600/439
See application file for complete search history.

(56) **References Cited**

U.S. PATENT DOCUMENTS

164,184 A 6/1875 Kiddee
1,167,014 A 1/1916 O'Brien

(Continued)

FOREIGN PATENT DOCUMENTS

CA 2384866 A1 5/2001
CN 101583323 A 11/2009

(Continued)

OTHER PUBLICATIONS

Brown et al., "Radiofrequency capacitive heaters: the effect of coupling medium resistivity on power absorption along a mouse leg" Phys Med Biol 1993, 38 1-12 (abstract).

(Continued)

Primary Examiner — Michael Peffley
Assistant Examiner — Khadijeh Vahdat
(74) *Attorney, Agent, or Firm* — Seager, Tufte & Wickhem, LLC

(57) **ABSTRACT**

A catheter and catheter system can use energy tailored for remodeling and/or removal of target material along a body lumen, often of atherosclerotic material of a blood vessel of a patient. An elongate flexible catheter body with a radially expandable structure may have a plurality of electrodes or other electrosurgical energy delivery surfaces to radially engage atherosclerotic material when the structure expands. An atherosclerotic material detector system may measure and/or characterize the atherosclerotic material and its location, optionally using impedance monitoring.

18 Claims, 62 Drawing Sheets
(24 of 62 Drawing Sheet(s) Filed in Color)

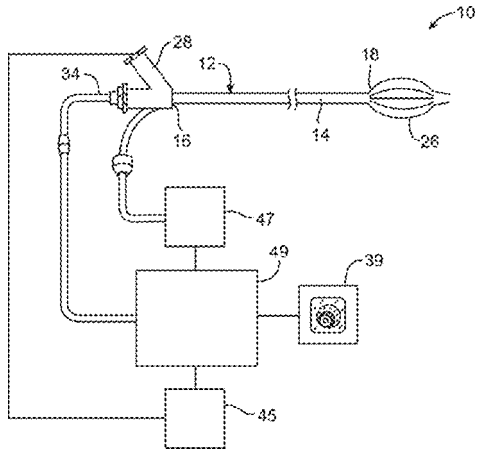

(51) **Int. Cl.**

A61B 18/12	(2006.01)
A61M 5/14	(2006.01)
A61M 25/10	(2013.01)
A61B 17/00	(2006.01)
A61B 18/00	(2006.01)
A61B 19/00	(2006.01)

(52) **U.S. Cl.**

CPC ***A61M 25/10*** (2013.01); *A61B 2017/00106* (2013.01); *A61B 2018/0016* (2013.01); *A61B 2018/00214* (2013.01); *A61B 2018/0022* (2013.01); *A61B 2018/00702* (2013.01); *A61B 2018/00869* (2013.01); *A61B 2018/00875* (2013.01); *A61B 2019/505* (2013.01); *A61B 2019/5234* (2013.01); *A61B 2019/5268* (2013.01); *A61B 2018/00267* (2013.01)

USPC **606/41**; 606/42; 600/372; 600/373; 600/381; 600/547

(56) **References Cited**

U.S. PATENT DOCUMENTS

2,505,358 A 4/1950 Gusberg et al.
2,701,559 A 2/1955 Cooper
3,108,593 A 10/1963 Glassman
3,108,594 A 10/1963 Glassman
3,540,431 A 11/1970 Mobin
3,952,747 A 4/1976 Kimmell
3,996,938 A 12/1976 Clark, III
4,046,150 A 9/1977 Schwartz et al.
4,290,427 A 9/1981 Chin
4,402,686 A 9/1983 Medel
4,483,341 A 11/1984 Witteles et al.
4,574,804 A 3/1986 Kurwa
4,587,975 A 5/1986 Salo et al.
4,649,936 A 3/1987 Ungar et al.
4,682,596 A 7/1987 Bales et al.
4,709,698 A 12/1987 Johnston et al.
4,765,331 A 8/1988 Petruzzi et al.
4,770,653 A 9/1988 Shturman
4,784,132 A 11/1988 Fox et al.
4,784,162 A 11/1988 Ricks et al.
4,785,806 A 11/1988 Deckelbaum et al.
4,788,975 A 12/1988 Shturman et al.
4,790,310 A 12/1988 Ginsburg et al.
4,799,479 A 1/1989 Spears
4,823,791 A 4/1989 D'Amelio et al.
4,830,003 A 5/1989 Wolff et al.
4,849,484 A 7/1989 Heard
4,862,886 A 9/1989 Clarke et al.
4,887,605 A 12/1989 Angelsen et al.
4,920,979 A 5/1990 Bullara et al.
4,938,766 A 7/1990 Jarvik
4,955,377 A 9/1990 Lennox et al.
4,976,711 A 12/1990 Parins et al.
5,010,895 A * 4/1991 Maurer et al. 607/138
5,034,010 A 7/1991 Kittrell et al.
5,052,402 A 10/1991 Bencini et al.
5,053,033 A 10/1991 Clarke et al.
5,071,424 A 12/1991 Reger et al.
5,074,871 A 12/1991 Groshong et al.
5,098,429 A 3/1992 Sterzer et al.
5,098,431 A 3/1992 Rydell
5,102,402 A 4/1992 Dror et al.
RE33,925 E 5/1992 Bales et al.
5,109,859 A 5/1992 Jenkins
5,125,928 A 6/1992 Parins et al.
5,129,396 A 7/1992 Rosen et al.
5,139,496 A 8/1992 Hed
5,143,836 A 9/1992 Hartman et al.
5,156,151 A 10/1992 Imran
5,156,610 A 10/1992 Reger et al.
5,158,564 A 10/1992 Schnepp-Pesch
5,170,802 A 12/1992 Mehra
5,178,620 A 1/1993 Eggers et al.
5,178,625 A 1/1993 Groshong et al.
5,190,540 A 3/1993 Lee
5,191,883 A 3/1993 Lennox et al.
5,211,651 A 5/1993 Reger et al.
5,234,407 A 8/1993 Teirstein et al.
5,242,441 A 9/1993 Avitall
5,251,634 A 10/1993 Weinberg et al.
5,254,098 A 10/1993 Ulrich et al.
5,255,679 A 10/1993 Imran
5,263,493 A 11/1993 Avitall
5,267,954 A 12/1993 Nita et al.
5,277,201 A 1/1994 Stern et al.
5,282,484 A 2/1994 Reger et al.
5,286,254 A 2/1994 Shapland et al.
5,295,484 A 3/1994 Marcus
5,297,564 A 3/1994 Love et al.
5,300,068 A 4/1994 Rosar et al.
5,301,683 A 4/1994 Durkan
5,304,115 A 4/1994 Pflueger et al.
5,304,121 A 4/1994 Sahatjian
5,304,171 A 4/1994 Gregory et al.
5,304,173 A 4/1994 Kittrell et al.
5,306,250 A 4/1994 March et al.
5,312,328 A 5/1994 Nita et al.
5,314,466 A 5/1994 Stern et al.
5,322,064 A 6/1994 Lundquist
5,324,255 A 6/1994 Passafaro et al.
5,326,341 A 7/1994 Lew et al.
5,326,342 A 7/1994 Pflueger et al.
5,330,518 A 7/1994 Neilson et al.
5,333,614 A 8/1994 Feiring
5,342,292 A 8/1994 Nita et al.
5,344,395 A 9/1994 Whalen et al.
5,345,936 A * 9/1994 Pomeranz et al. 600/374
5,364,392 A 11/1994 Warner et al.
5,365,172 A 11/1994 Hrovat et al.
5,368,557 A 11/1994 Nita et al.
5,368,558 A 11/1994 Nita et al.
5,380,274 A 1/1995 Nita et al.
5,380,319 A 1/1995 Saito et al.
5,382,228 A 1/1995 Nita et al.
5,383,874 A 1/1995 Jackson et al.
5,383,917 A 1/1995 Desai et al.
5,397,301 A 3/1995 Pflueger et al.
5,397,339 A 3/1995 Desai
5,401,272 A 3/1995 Perkins et al.
5,403,311 A 4/1995 Abele et al.
5,405,318 A 4/1995 Nita et al.
5,405,346 A 4/1995 Grundy et al.
5,409,000 A 4/1995 Imran
5,417,672 A 5/1995 Nita et al.
5,419,767 A 5/1995 Eggers et al.
5,427,118 A 6/1995 Nita et al.
5,432,876 A 7/1995 Appeldorn et al.
5,441,498 A 8/1995 Perkins et al.
5,447,509 A 9/1995 Mills et al.
5,451,207 A 9/1995 Yock et al.
5,453,091 A 9/1995 Taylor et al.
5,454,788 A 10/1995 Walker et al.
5,454,809 A 10/1995 Janssen
5,455,029 A 10/1995 Hartman et al.
5,456,682 A 10/1995 Edwards et al.
5,457,042 A 10/1995 Hartman et al.
5,471,982 A 12/1995 Edwards et al.
5,474,530 A 12/1995 Passafaro et al.
5,478,351 A 12/1995 Meade et al.
5,496,311 A 3/1996 Abele et al.
5,496,312 A 3/1996 Klicek et al.
5,498,261 A 3/1996 Strul
5,505,201 A 4/1996 Grill et al.
5,505,730 A 4/1996 Edwards
5,507,744 A 4/1996 Tay et al.
5,522,873 A 6/1996 Jackman et al.
5,531,520 A 7/1996 Grimson et al.
5,540,656 A 7/1996 Pflueger et al.
5,540,679 A 7/1996 Fram et al.
5,540,681 A 7/1996 Strul et al.
5,542,917 A 8/1996 Nita et al.

(56) **References Cited**

U.S. PATENT DOCUMENTS

5,545,161 A 8/1996 Imran
5,562,100 A 10/1996 Kittrell et al.
5,571,122 A 11/1996 Kelly et al.
5,571,151 A 11/1996 Gregory
5,573,531 A 11/1996 Gregory et al.
5,573,533 A 11/1996 Strul
5,584,831 A 12/1996 McKay
5,584,872 A 12/1996 Lafontaine et al.
5,588,962 A 12/1996 Nicholas et al.
5,599,346 A 2/1997 Edwards et al.
5,601,526 A 2/1997 Chapelon et al.
5,609,606 A 3/1997 O'Boyle et al.
5,626,576 A 5/1997 Janssen
5,630,837 A 5/1997 Crowley
5,637,090 A 6/1997 McGee et al.
5,643,255 A 7/1997 Organ
5,643,297 A 7/1997 Nordgren et al.
5,647,847 A 7/1997 Lafontaine et al.
5,649,923 A 7/1997 Gregory et al.
5,651,780 A 7/1997 Jackson et al.
5,653,684 A 8/1997 Laptewicz et al.
5,662,671 A 9/1997 Barbut et al.
5,665,062 A 9/1997 Houser
5,665,098 A 9/1997 Kelly et al.
5,666,964 A 9/1997 Meilus
5,667,490 A 9/1997 Keith et al.
5,672,174 A 9/1997 Gough et al.
5,676,693 A 10/1997 Lafontaine
5,678,296 A 10/1997 Fleischhacker et al.
5,681,282 A 10/1997 Eggers et al.
RE35,656 E 11/1997 Feinberg
5,688,266 A 11/1997 Edwards et al.
5,693,015 A 12/1997 Walker et al.
5,693,029 A 12/1997 Leonhardt et al.
5,693,043 A 12/1997 Kittrell et al.
5,693,082 A 12/1997 Warner et al.
5,695,504 A 12/1997 Gifford et al.
5,697,369 A 12/1997 Long, Jr. et al.
5,697,909 A 12/1997 Eggers et al.
5,702,386 A 12/1997 Stern et al.
5,702,433 A 12/1997 Taylor et al.
5,706,809 A 1/1998 Littmann et al.
5,713,942 A 2/1998 Stern et al.
5,715,819 A 2/1998 Svenson et al.
5,735,846 A 4/1998 Panescu et al.
5,741,214 A 4/1998 Ouchi et al.
5,741,248 A 4/1998 Stern et al.
5,741,249 A 4/1998 Moss et al.
5,743,903 A 4/1998 Stern et al.
5,748,347 A 5/1998 Erickson
5,749,914 A 5/1998 Janssen
5,755,682 A 5/1998 Knudson et al.
5,755,715 A 5/1998 Stern et al.
5,755,753 A 5/1998 Knowlton et al.
5,769,847 A 6/1998 Panescu et al.
5,769,880 A 6/1998 Truckai et al.
5,775,338 A 7/1998 Hastings
5,776,174 A 7/1998 Van Tassel
5,779,698 A 7/1998 Clayman et al.
5,782,760 A 7/1998 Schaer
5,785,702 A 7/1998 Murphy-Chutorian et al.
5,792,105 A 8/1998 Lin et al.
5,797,849 A 8/1998 Vesely et al.
5,797,903 A 8/1998 Swanson et al.
5,800,484 A 9/1998 Gough et al.
5,800,494 A 9/1998 Campbell et al.
5,807,306 A 9/1998 Shapland et al.
5,810,802 A 9/1998 Panescu et al.
5,810,803 A 9/1998 Moss et al.
5,810,810 A 9/1998 Tay et al.
5,817,092 A 10/1998 Behl
5,817,113 A 10/1998 Gifford et al.
5,817,144 A 10/1998 Gregory et al.
5,823,956 A 10/1998 Roth et al.
5,827,203 A 10/1998 Nita et al.
5,827,268 A 10/1998 Laufer
5,829,447 A 11/1998 Stevens et al.
5,830,213 A 11/1998 Panescu et al.
5,830,222 A 11/1998 Makower
5,832,228 A 11/1998 Holden et al.
5,833,593 A 11/1998 Liprie
5,836,874 A 11/1998 Swanson et al.
5,840,076 A 11/1998 Swanson et al.
5,843,016 A 12/1998 Lugnani et al.
5,846,238 A 12/1998 Jackson et al.
5,846,239 A 12/1998 Swanson et al.
5,846,245 A 12/1998 McCarthy et al.
5,848,969 A 12/1998 Panescu et al.
5,853,411 A 12/1998 Whayne et al.
5,855,614 A 1/1999 Stevens et al.
5,860,974 A 1/1999 Abele
5,865,801 A 2/1999 Houser
5,868,735 A 2/1999 Lafontaine et al.
5,868,736 A 2/1999 Swanson et al.
5,869,127 A 2/1999 Zhong
5,871,483 A 2/1999 Jackson et al.
5,871,524 A 2/1999 Knowlton et al.
5,875,782 A 3/1999 Ferrari et al.
5,876,369 A 3/1999 Houser
5,876,374 A 3/1999 Alba et al.
5,876,397 A 3/1999 Edelman et al.
5,879,348 A 3/1999 Owens et al.
5,891,114 A 4/1999 Chien et al.
5,891,135 A 4/1999 Jackson et al.
5,891,136 A 4/1999 McGee et al.
5,891,138 A 4/1999 Tu et al.
5,895,378 A 4/1999 Nita
5,897,552 A 4/1999 Edwards et al.
5,902,328 A 5/1999 Lafontaine et al.
5,904,651 A 5/1999 Swanson et al.
5,904,667 A 5/1999 Falwell et al.
5,904,697 A 5/1999 Gifford et al.
5,904,709 A 5/1999 Arndt et al.
5,906,614 A 5/1999 Stern et al.
5,906,623 A 5/1999 Peterson
5,906,636 A 5/1999 Casscells et al.
5,916,192 A 6/1999 Nita et al.
5,916,227 A 6/1999 Keith et al.
5,916,239 A 6/1999 Geddes et al.
5,919,219 A 7/1999 Knowlton et al.
5,924,424 A 7/1999 Stevens et al.
5,925,038 A 7/1999 Panescu et al.
5,934,284 A 8/1999 Plaia et al.
5,935,063 A 8/1999 Nguyen
5,938,670 A 8/1999 Keith et al.
5,947,977 A 9/1999 Slepian et al.
5,948,011 A 9/1999 Knowlton et al.
5,951,494 A 9/1999 Wang et al.
5,951,539 A 9/1999 Nita et al.
5,954,717 A 9/1999 Behl et al.
5,957,882 A 9/1999 Nita et al.
5,957,941 A 9/1999 Ream et al.
5,957,969 A 9/1999 Warner et al.
5,961,513 A 10/1999 Swanson et al.
5,964,757 A 10/1999 Ponzi et al.
5,967,976 A 10/1999 Larsen et al.
5,967,978 A 10/1999 Littmann et al.
5,967,984 A 10/1999 Chu et al.
5,971,975 A 10/1999 Mills et al.
5,972,026 A 10/1999 Laufer et al.
5,980,563 A 11/1999 Tu et al.
5,989,208 A 11/1999 Nita et al.
5,989,284 A 11/1999 Laufer
5,993,462 A 11/1999 Pomeranz et al.
5,997,497 A 12/1999 Nita et al.
5,999,678 A 12/1999 Murphy-Chutorian et al.
6,004,269 A 12/1999 Crowley et al.
6,004,316 A 12/1999 Laufer et al.
6,007,514 A 12/1999 Nita
6,010,522 A 1/2000 Barbut et al.
6,013,033 A 1/2000 Berger et al.
6,014,590 A 1/2000 Whayne et al.
6,019,757 A 2/2000 Scheldrup
6,022,309 A 2/2000 Celliers et al.

(56) **References Cited**

U.S. PATENT DOCUMENTS

6,024,740 A 2/2000 Lesh et al.
6,030,611 A 2/2000 Gorecki et al.
6,032,675 A 3/2000 Rubinsky
6,033,357 A 3/2000 Ciezki et al.
6,033,397 A 3/2000 Laufer et al.
6,033,398 A 3/2000 Farley et al.
6,036,687 A 3/2000 Laufer et al.
6,036,689 A 3/2000 Tu et al.
6,041,260 A 3/2000 Stern et al.
6,050,994 A 4/2000 Sherman et al.
6,056,744 A 5/2000 Edwards
6,056,746 A 5/2000 Goble et al.
6,063,085 A 5/2000 Tay et al.
6,066,096 A 5/2000 Smith et al.
6,066,139 A 5/2000 Ryan et al.
6,068,638 A 5/2000 Makower
6,068,653 A 5/2000 Lafontaine
6,071,277 A 6/2000 Farley et al.
6,071,278 A 6/2000 Panescu et al.
6,078,839 A 6/2000 Carson
6,079,414 A 6/2000 Roth
6,080,171 A 6/2000 Keith et al.
6,081,749 A 6/2000 Ingle et al.
6,083,159 A 7/2000 Driscoll et al.
6,086,581 A 7/2000 Reynolds et al.
6,091,995 A 7/2000 Ingle et al.
6,093,166 A 7/2000 Knudson et al.
6,096,021 A 8/2000 Helm et al.
6,099,526 A 8/2000 Whayne et al.
6,102,908 A 8/2000 Tu et al.
6,106,477 A 8/2000 Miesel et al.
6,110,187 A 8/2000 Donlon et al.
6,114,311 A 9/2000 Parmacek et al.
6,117,101 A 9/2000 Diederich et al.
6,117,128 A 9/2000 Gregory
6,120,476 A 9/2000 Fung et al.
6,120,516 A 9/2000 Selmon et al.
6,121,775 A 9/2000 Pearlman
6,123,679 A 9/2000 Lafaut et al.
6,123,682 A 9/2000 Knudson et al.
6,123,702 A 9/2000 Swanson et al.
6,123,703 A 9/2000 Tu et al.
6,123,718 A 9/2000 Tu et al.
6,129,725 A 10/2000 Tu et al.
6,135,997 A 10/2000 Laufer et al.
6,142,991 A 11/2000 Schatzberger
6,142,993 A 11/2000 Whayne et al.
6,149,647 A 11/2000 Tu et al.
6,152,899 A 11/2000 Farley et al.
6,152,912 A 11/2000 Jansen et al.
6,156,046 A 12/2000 Passafaro et al.
6,158,250 A 12/2000 Tibbals et al.
6,159,187 A 12/2000 Park et al.
6,159,225 A 12/2000 Makower
6,161,048 A 12/2000 Sluijter et al.
6,162,184 A 12/2000 Swanson et al.
6,165,163 A 12/2000 Chien et al.
6,165,172 A 12/2000 Farley et al.
6,165,187 A 12/2000 Reger et al.
6,168,594 B1 1/2001 Lafontaine et al.
6,171,321 B1 1/2001 Gifford, III et al.
6,179,832 B1 1/2001 Jones et al.
6,179,835 B1 1/2001 Panescu et al.
6,179,859 B1 1/2001 Bates et al.
6,183,468 B1 2/2001 Swanson et al.
6,183,486 B1 2/2001 Snow et al.
6,190,379 B1 2/2001 Heuser et al.
6,191,862 B1 2/2001 Swanson et al.
6,197,021 B1 3/2001 Panescu et al.
6,200,266 B1 3/2001 Shokrollahi et al.
6,203,537 B1 3/2001 Adrian
6,203,561 B1 3/2001 Ramee et al.
6,210,406 B1 4/2001 Webster
6,211,247 B1 4/2001 Goodman
6,216,704 B1 4/2001 Ingle et al.
6,217,576 B1 4/2001 Tu et al.
6,219,577 B1 4/2001 Brown, III et al.
6,228,076 B1 5/2001 Winston et al.
6,228,109 B1 5/2001 Tu et al.
6,231,516 B1 5/2001 Keilman et al.
6,231,587 B1 5/2001 Makower
6,235,044 B1 5/2001 Root et al.
6,236,883 B1 5/2001 Ciaccio et al.
6,237,605 B1 5/2001 Vaska et al.
6,238,389 B1 5/2001 Paddock et al.
6,238,392 B1 5/2001 Long
6,241,666 B1 6/2001 Pomeranz et al.
6,241,753 B1 6/2001 Knowlton
6,245,020 B1 6/2001 Moore et al.
6,245,045 B1 6/2001 Stratienko
6,248,126 B1 6/2001 Lesser et al.
6,251,128 B1 6/2001 Knopp et al.
6,258,087 B1 7/2001 Edwards et al.
6,273,886 B1 8/2001 Edwards et al.
6,280,466 B1 8/2001 Kugler et al.
6,283,935 B1 9/2001 Laufer et al.
6,283,959 B1 9/2001 Lalonde et al.
6,284,743 B1 9/2001 Parmacek et al.
6,287,323 B1 9/2001 Hammerslag
6,290,696 B1 9/2001 Lafontaine
6,292,695 B1 9/2001 Webster, Jr. et al.
6,293,942 B1 9/2001 Goble et al.
6,293,943 B1 9/2001 Panescu et al.
6,296,619 B1 10/2001 Brisken et al.
6,298,256 B1 10/2001 Meyer
6,299,379 B1 10/2001 Lewis
6,299,623 B1 10/2001 Wulfman
6,309,379 B1 10/2001 Willard et al.
6,309,399 B1 10/2001 Barbut et al.
6,311,090 B1 10/2001 Knowlton
6,317,615 B1 11/2001 KenKnight et al.
6,319,242 B1 11/2001 Patterson et al.
6,319,251 B1 11/2001 Tu et al.
6,322,559 B1 * 11/2001 Daulton et al. 606/41
6,325,797 B1 12/2001 Stewart et al.
6,325,799 B1 12/2001 Goble
6,328,699 B1 12/2001 Eigler et al.
6,346,074 B1 2/2002 Roth
6,346,104 B2 2/2002 Daly et al.
6,350,248 B1 2/2002 Knudson et al.
6,350,276 B1 2/2002 Knowlton
6,353,751 B1 3/2002 Swanson et al.
6,355,029 B1 3/2002 Joye et al.
6,357,447 B1 3/2002 Swanson et al.
6,361,519 B1 3/2002 Knudson et al.
6,364,840 B1 4/2002 Crowley
6,371,965 B2 4/2002 Gifford, III et al.
6,375,668 B1 4/2002 Gifford et al.
6,377,854 B1 4/2002 Knowlton
6,377,855 B1 4/2002 Knowlton
6,379,352 B1 4/2002 Reynolds et al.
6,379,373 B1 4/2002 Sawhney et al.
6,381,497 B1 4/2002 Knowlton
6,381,498 B1 4/2002 Knowlton
6,383,151 B1 5/2002 Diederich et al.
6,387,105 B1 5/2002 Gifford, III et al.
6,387,380 B1 5/2002 Knowlton
6,389,311 B1 5/2002 Whayne et al.
6,389,314 B2 5/2002 Feiring
6,391,024 B1 5/2002 Sun et al.
6,394,096 B1 5/2002 Constantz
6,394,956 B1 5/2002 Chandrasekaran et al.
6,398,780 B1 6/2002 Farley et al.
6,398,782 B1 6/2002 Pecor et al.
6,398,792 B1 6/2002 O'Connor
6,401,720 B1 6/2002 Stevens et al.
6,402,719 B1 6/2002 Ponzi et al.
6,405,090 B1 6/2002 Knowlton
6,409,723 B1 6/2002 Edwards
6,413,255 B1 7/2002 Stern
6,421,559 B1 7/2002 Pearlman
6,423,057 B1 7/2002 He et al.
6,425,867 B1 7/2002 Vaezy et al.
6,425,912 B1 7/2002 Knowlton

(56) **References Cited**

U.S. PATENT DOCUMENTS

6,427,089	B1	7/2002	Knowlton
6,427,118	B1	7/2002	Suzuki
6,428,534	B1	8/2002	Joye et al.
6,428,536	B2	8/2002	Panescu et al.
6,430,446	B1	8/2002	Knowlton
6,432,102	B2	8/2002	Joye et al.
6,436,056	B1	8/2002	Wang et al.
6,438,424	B1	8/2002	Knowlton
6,440,125	B1	8/2002	Rentrop
6,442,413	B1	8/2002	Silver
6,443,965	B1	9/2002	Gifford, III et al.
6,445,939	B1	9/2002	Swanson et al.
6,447,505	B2	9/2002	McGovern et al.
6,447,509	B1	9/2002	Bonnet et al.
6,451,034	B1	9/2002	Gifford, III et al.
6,451,044	B1	9/2002	Naghavi et al.
6,453,202	B1	9/2002	Knowlton
6,454,737	B1	9/2002	Nita et al.
6,454,757	B1	9/2002	Nita et al.
6,454,775	B1	9/2002	Demarais et al.
6,458,098	B1	10/2002	Kanesaka
6,461,378	B1	10/2002	Knowlton
6,468,276	B1	10/2002	McKay
6,468,297	B1	10/2002	Williams et al.
6,470,216	B1	10/2002	Knowlton
6,470,219	B1	10/2002	Edwards et al.
6,471,696	B1	10/2002	Berube et al.
6,475,213	B1	11/2002	Whayne et al.
6,475,215	B1	11/2002	Tanrisever
6,475,238	B1	11/2002	Fedida et al.
6,477,426	B1	11/2002	Fenn et al.
6,480,745	B2	11/2002	Nelson et al.
6,481,704	B1	11/2002	Koster et al.
6,482,202	B1	11/2002	Goble et al.
6,484,052	B1	11/2002	Visuri et al.
6,485,489	B2	11/2002	Teirstein et al.
6,488,679	B1	12/2002	Swanson et al.
6,489,307	B1	12/2002	Phillips et al.
6,491,705	B2	12/2002	Gifford, III et al.
6,494,891	B1	12/2002	Cornish et al.
6,497,711	B1	12/2002	Plaia et al.
6,500,172	B1	12/2002	Panescu et al.
6,500,174	B1	12/2002	Maguire et al.
6,508,765	B2	1/2003	Suorsa et al.
6,508,804	B2	1/2003	Sarge et al.
6,508,815	B1	1/2003	Strul et al.
6,511,478	B1	1/2003	Burnside et al.
6,511,496	B1	1/2003	Huter et al.
6,511,500	B1	1/2003	Rahme
6,514,236	B1	2/2003	Stratienko
6,514,245	B1	2/2003	Williams et al.
6,514,248	B1	2/2003	Eggers et al.
6,517,534	B1	2/2003	McGovern et al.
6,517,572	B2	2/2003	Kugler et al.
6,522,913	B2	2/2003	Panescu et al.
6,522,926	B1	2/2003	Kieval et al.
6,524,274	B1	2/2003	Rosenthal et al.
6,524,299	B1	2/2003	Tran et al.
6,527,765	B2	3/2003	Kelman et al.
6,527,769	B2	3/2003	Langberg et al.
6,540,761	B2	4/2003	Houser
6,542,781	B1	4/2003	Koblish et al.
6,544,780	B1	4/2003	Wang
6,546,272	B1	4/2003	MacKinnon et al.
6,547,788	B1	4/2003	Maguire et al.
6,549,800	B1	4/2003	Atalar et al.
6,552,796	B2	4/2003	Magnin et al.
6,554,780	B1	4/2003	Sampson et al.
6,558,381	B2	5/2003	Ingle et al.
6,558,382	B2	5/2003	Jahns et al.
6,564,096	B2	5/2003	Mest
6,565,582	B2	5/2003	Gifford, III et al.
6,569,109	B2	5/2003	Sakurai et al.
6,569,177	B1	5/2003	Dillard et al.
6,570,659	B2	5/2003	Schmitt
6,572,551	B1	6/2003	Smith et al.
6,572,612	B2	6/2003	Stewart et al.
6,577,902	B1	6/2003	Laufer et al.
6,579,308	B1	6/2003	Jansen et al.
6,579,311	B1	6/2003	Makower
6,582,423	B1	6/2003	Thapliyal et al.
6,589,238	B2	7/2003	Edwards et al.
6,592,526	B1	7/2003	Lenker
6,592,567	B1	7/2003	Levin et al.
6,595,959	B1	7/2003	Stratienko
6,600,956	B2	7/2003	Maschino et al.
6,602,242	B1	8/2003	Fung et al.
6,602,246	B1	8/2003	Joye et al.
6,605,061	B2	8/2003	Vantassel et al.
6,605,084	B2	8/2003	Acker et al.
6,623,452	B2	9/2003	Chien et al.
6,623,453	B1	9/2003	Guibert et al.
6,632,193	B1	10/2003	Davison et al.
6,632,196	B1	10/2003	Houser
6,645,223	B2	11/2003	Boyle et al.
6,648,854	B1	11/2003	Patterson et al.
6,648,878	B2	11/2003	Lafontaine
6,648,879	B2	11/2003	Joye et al.
6,651,672	B2	11/2003	Roth
6,652,513	B2	11/2003	Panescu et al.
6,652,515	B1	11/2003	Maguire et al.
6,656,136	B1	12/2003	Weng et al.
6,658,279	B2	12/2003	Swanson et al.
6,659,981	B2	12/2003	Stewart et al.
6,666,858	B2	12/2003	Lafontaine
6,666,863	B2	12/2003	Wentzel et al.
6,669,655	B1	12/2003	Acker et al.
6,669,692	B1	12/2003	Nelson et al.
6,673,040	B1	1/2004	Samson et al.
6,673,064	B1	1/2004	Rentrop
6,673,066	B2	1/2004	Werneth
6,673,090	B2	1/2004	Root et al.
6,673,101	B1	1/2004	Fitzgerald et al.
6,673,290	B1	1/2004	Whayne et al.
6,676,678	B2	1/2004	Gifford, III et al.
6,679,268	B2	1/2004	Stevens et al.
6,681,773	B2	1/2004	Murphy et al.
6,682,541	B1	1/2004	Gifford, III et al.
6,684,098	B2	1/2004	Oshio et al.
6,685,732	B2	2/2004	Kramer
6,685,733	B1	2/2004	Dae et al.
6,689,086	B1	2/2004	Nita et al.
6,689,148	B2	2/2004	Sawhney et al.
6,690,181	B1	2/2004	Dowdeswell et al.
6,692,490	B1	2/2004	Edwards
6,695,830	B2	2/2004	Vigil et al.
6,695,857	B2	2/2004	Gifford, III et al.
6,699,241	B2	3/2004	Rappaport et al.
6,699,257	B2	3/2004	Gifford, III et al.
6,702,748	B1	3/2004	Nita et al.
6,702,811	B2	3/2004	Stewart et al.
6,706,010	B1	3/2004	Miki et al.
6,706,011	B1	3/2004	Murphy-Chutorian et al.
6,706,037	B2	3/2004	Zvuloni et al.
6,709,431	B2	3/2004	Lafontaine
6,711,429	B1	3/2004	Gilboa et al.
6,712,815	B2	3/2004	Sampson et al.
6,714,822	B2	3/2004	King et al.
6,716,184	B2	4/2004	Vaezy et al.
6,720,350	B2	4/2004	Kunz et al.
6,723,043	B2	4/2004	Kleeman et al.
6,723,064	B2	4/2004	Babaev
6,736,811	B2	5/2004	Panescu et al.
6,743,184	B2	6/2004	Sampson et al.
6,746,401	B2	6/2004	Panescu
6,746,464	B1	6/2004	Makower
6,746,474	B2	6/2004	Saadat
6,748,953	B2	6/2004	Sherry et al.
6,749,607	B2	6/2004	Edwards et al.
6,752,805	B2	6/2004	Maguire et al.
6,760,616	B2	7/2004	Hoey et al.
6,763,261	B2	7/2004	Casscells, III et al.
6,764,501	B2	7/2004	Ganz
6,769,433	B2	8/2004	Zikorus et al.

(56) **References Cited**

U.S. PATENT DOCUMENTS

6,770,070	B1	8/2004	Balbierz
6,771,996	B2	8/2004	Bowe et al.
6,773,433	B2	8/2004	Stewart et al.
6,786,900	B2	9/2004	Joye et al.
6,786,901	B2	9/2004	Joye et al.
6,786,904	B2	9/2004	Döscher et al.
6,788,977	B2	9/2004	Fenn et al.
6,790,206	B2	9/2004	Panescu
6,790,222	B2	9/2004	Kugler et al.
6,796,981	B2	9/2004	Wham et al.
6,797,933	B1	9/2004	Mendis et al.
6,797,960	B1	9/2004	Spartiotis et al.
6,800,075	B2	10/2004	Mische et al.
6,802,857	B1	10/2004	Walsh et al.
6,807,444	B2	10/2004	Tu et al.
6,811,550	B2	11/2004	Holland et al.
6,813,520	B2	11/2004	Sampson et al.
6,814,730	B2	11/2004	Li
6,814,733	B2	11/2004	Schwartz et al.
6,823,205	B1	11/2004	Jara
6,824,516	B2	11/2004	Batten et al.
6,827,726	B2	12/2004	Parodi
6,827,926	B2	12/2004	Robinson et al.
6,829,497	B2	12/2004	Mogul
6,830,568	B1	12/2004	Kesten et al.
6,837,886	B2	1/2005	Collins et al.
6,837,888	B2	1/2005	Ciarrocca et al.
6,845,267	B2	1/2005	Harrison et al.
6,847,848	B2	1/2005	Sterzer
6,849,073	B2	2/2005	Hoey et al.
6,849,075	B2	2/2005	Bertolero et al.
6,853,425	B2	2/2005	Kim et al.
6,855,123	B2	2/2005	Nita
6,855,143	B2	2/2005	Davison
6,869,431	B2	3/2005	Maguire et al.
6,872,183	B2	3/2005	Sampson et al.
6,884,260	B2	4/2005	Kugler et al.
6,889,694	B2	5/2005	Hooven
6,893,436	B2	5/2005	Woodard et al.
6,895,077	B2	5/2005	Karellas et al.
6,895,265	B2	5/2005	Silver
6,898,454	B2	5/2005	Atalar et al.
6,899,711	B2	5/2005	Stewart et al.
6,899,718	B2	5/2005	Gifford, III et al.
6,905,494	B2	6/2005	Yon et al.
6,908,462	B2	6/2005	Joye et al.
6,909,009	B2	6/2005	Koridze
6,911,026	B1	6/2005	Hall et al.
6,915,806	B2	7/2005	Pacek et al.
6,923,805	B1	8/2005	LaFontaine et al.
6,926,246	B2	8/2005	Ginggen
6,926,713	B2	8/2005	Rioux et al.
6,926,716	B2	8/2005	Baker et al.
6,929,009	B2	8/2005	Makower et al.
6,929,632	B2	8/2005	Nita et al.
6,929,639	B2	8/2005	Lafontaine
6,932,776	B2	8/2005	Carr
6,936,047	B2	8/2005	Nasab et al.
6,942,620	B2	9/2005	Nita et al.
6,942,657	B2	9/2005	Sinofsky et al.
6,942,677	B2	9/2005	Nita et al.
6,942,692	B2	9/2005	Landau et al.
6,949,097	B2	9/2005	Stewart et al.
6,949,121	B1	9/2005	Laguna
6,952,615	B2	10/2005	Satake
6,953,425	B2	10/2005	Brister
6,955,174	B2	10/2005	Joye et al.
6,955,175	B2	10/2005	Stevens et al.
6,958,075	B2	10/2005	Mon et al.
6,959,711	B2	11/2005	Murphy et al.
6,960,207	B2	11/2005	Vanney et al.
6,962,584	B1	11/2005	Stone et al.
6,964,660	B2	11/2005	Maguire et al.
6,966,908	B2	11/2005	Maguire et al.
6,972,015	B2	12/2005	Joye et al.
6,972,024	B1	12/2005	Kilpatrick et al.
6,974,456	B2	12/2005	Edwards et al.
6,978,174	B2	12/2005	Gelfand et al.
6,979,329	B2	12/2005	Burnside et al.
6,979,420	B2	12/2005	Weber
6,984,238	B2	1/2006	Gifford, III et al.
6,985,774	B2	1/2006	Kieval et al.
6,986,739	B2	1/2006	Warren et al.
6,989,009	B2	1/2006	Lafontaine
6,989,010	B2	1/2006	Francischelli et al.
6,991,617	B2	1/2006	Hektner et al.
7,001,378	B2	2/2006	Yon et al.
7,006,858	B2	2/2006	Silver et al.
7,008,667	B2	3/2006	Chudzik et al.
7,011,508	B2	3/2006	Lum
7,022,105	B1	4/2006	Edwards
7,022,120	B2	4/2006	Lafontaine
7,025,767	B2	4/2006	Schaefer et al.
7,033,322	B2	4/2006	Silver
7,033,372	B1	4/2006	Cahalan
7,041,098	B2	5/2006	Farley et al.
7,050,848	B2	5/2006	Hoey et al.
7,063,670	B2	6/2006	Sampson et al.
7,063,679	B2	6/2006	Maguire et al.
7,063,719	B2	6/2006	Jansen et al.
7,066,895	B2	6/2006	Podany
7,066,900	B2	6/2006	Botto et al.
7,066,904	B2	6/2006	Rosenthal et al.
7,072,720	B2	7/2006	Puskas
7,074,217	B2	7/2006	Strul et al.
7,081,112	B2	7/2006	Joye et al.
7,081,114	B2	7/2006	Rashidi
7,083,614	B2	8/2006	Fjield et al.
7,084,276	B2	8/2006	Vu et al.
7,087,026	B2	8/2006	Callister et al.
7,087,051	B2	8/2006	Bourne et al.
7,087,052	B2	8/2006	Sampson et al.
7,087,053	B2	8/2006	Vanney
7,089,065	B2	8/2006	Westlund et al.
7,097,641	B1	8/2006	Arless et al.
7,100,614	B2	9/2006	Stevens et al.
7,101,368	B2	9/2006	Lafontaine
7,104,983	B2	9/2006	Grasso, III et al.
7,104,987	B2	9/2006	Biggs et al.
7,108,715	B2	9/2006	Lawrence-Brown et al.
7,112,196	B2	9/2006	Brosch et al.
7,112,198	B2	9/2006	Satake
7,112,211	B2	9/2006	Gifford, III et al.
7,122,019	B1	10/2006	Kesten et al.
7,122,033	B2	10/2006	Wood
7,134,438	B2	11/2006	Makower et al.
7,137,963	B2	11/2006	Nita et al.
7,137,980	B2	11/2006	Buysse et al.
7,153,315	B2	12/2006	Miller
7,155,271	B2	12/2006	Halperin et al.
7,157,491	B2	1/2007	Mewshaw et al.
7,157,492	B2	1/2007	Mewshaw et al.
7,158,832	B2	1/2007	Kieval et al.
7,160,296	B2	1/2007	Pearson et al.
7,162,303	B2	1/2007	Levin et al.
7,165,551	B2	1/2007	Edwards et al.
7,169,144	B2	1/2007	Hoey et al.
7,172,589	B2	2/2007	Lafontaine
7,172,610	B2	2/2007	Heitzmann et al.
7,181,261	B2	2/2007	Silver et al.
7,184,811	B2	2/2007	Phan et al.
7,184,827	B1	2/2007	Edwards
7,189,227	B2	3/2007	Lafontaine
7,192,427	B2	3/2007	Chapelon et al.
7,192,586	B2	3/2007	Bander
7,197,354	B2	3/2007	Sobe
7,198,632	B2	4/2007	Lim et al.
7,200,445	B1	4/2007	Dalbec et al.
7,201,749	B2	4/2007	Govari et al.
7,203,537	B2	4/2007	Mower
7,214,234	B2	5/2007	Rapacki et al.
7,220,233	B2	5/2007	Nita et al.
7,220,239	B2	5/2007	Wilson et al.
7,220,257	B1	5/2007	Lafontaine

(56) **References Cited**

U.S. PATENT DOCUMENTS

7,220,270	B2	5/2007	Sawhney et al.
7,232,458	B2	6/2007	Saadat
7,232,459	B2	6/2007	Greenberg et al.
7,238,184	B2	7/2007	Megerman et al.
7,241,273	B2	7/2007	Maguire et al.
7,241,736	B2	7/2007	Hunter et al.
7,247,141	B2	7/2007	Makin et al.
7,250,041	B2	7/2007	Chiu et al.
7,250,440	B2	7/2007	Mewshaw et al.
7,252,664	B2	8/2007	Nasab et al.
7,252,679	B2	8/2007	Fischell et al.
7,264,619	B2	9/2007	Venturelli
7,279,600	B2	10/2007	Mewshaw et al.
7,280,863	B2	10/2007	Shachar
7,282,213	B2	10/2007	Schroeder et al.
7,285,119	B2	10/2007	Stewart et al.
7,285,120	B2	10/2007	Im et al.
7,288,089	B2	10/2007	Yon et al.
7,288,096	B2	10/2007	Chin
7,291,146	B2	11/2007	Steinke et al.
7,293,562	B2	11/2007	Malecki et al.
7,294,125	B2	11/2007	Phalen et al.
7,294,126	B2	11/2007	Sampson et al.
7,294,127	B2	11/2007	Leung et al.
7,297,131	B2	11/2007	Nita
7,297,475	B2	11/2007	Koiwai et al.
7,300,433	B2	11/2007	Lane et al.
7,301,108	B2	11/2007	Egitto et al.
7,310,150	B2	12/2007	Guillermo et al.
7,313,430	B2	12/2007	Urquhart et al.
7,314,483	B2	1/2008	Landau et al.
7,317,077	B2	1/2008	Averback et al.
7,323,006	B2	1/2008	Andreas et al.
7,326,206	B2	2/2008	Paul et al.
7,326,226	B2	2/2008	Root et al.
7,326,235	B2	2/2008	Edwards
7,326,237	B2	2/2008	DePalma et al.
7,329,236	B2	2/2008	Kesten et al.
7,335,180	B2	2/2008	Nita et al.
7,335,192	B2	2/2008	Keren et al.
7,338,467	B2	3/2008	Lutter
7,341,570	B2	3/2008	Keren et al.
7,343,195	B2	3/2008	Strommer et al.
7,347,857	B2	3/2008	Anderson et al.
7,348,003	B2	3/2008	Salcedo et al.
7,352,593	B2	4/2008	Zeng et al.
7,354,927	B2	4/2008	Vu
7,359,732	B2	4/2008	Kim et al.
7,361,341	B2	4/2008	Salcedo et al.
7,364,566	B2	4/2008	Elkins et al.
7,367,970	B2	5/2008	Govari et al.
7,367,975	B2	5/2008	Malecki et al.
7,371,231	B2	5/2008	Rioux et al.
7,387,126	B2	6/2008	Cox et al.
7,393,338	B2	7/2008	Nita
7,396,355	B2	7/2008	Goldman et al.
7,402,151	B2	7/2008	Rosenman et al.
7,402,312	B2	7/2008	Rosen et al.
7,404,824	B1	7/2008	Webler et al.
7,406,970	B2	8/2008	Zikorus et al.
7,407,502	B2	8/2008	Strul et al.
7,407,506	B2	8/2008	Makower
7,407,671	B2	8/2008	McBride et al.
7,408,021	B2	8/2008	Averback et al.
7,410,486	B2	8/2008	Fuimaono et al.
7,413,556	B2	8/2008	Zhang et al.
7,425,212	B1	9/2008	Danek et al.
7,426,409	B2	9/2008	Casscells, III et al.
7,435,248	B2	10/2008	Taimisto et al.
7,447,453	B2	11/2008	Kim et al.
7,449,018	B2	11/2008	Kramer
7,452,538	B2	11/2008	Ni et al.
7,473,890	B2	1/2009	Grier et al.
7,476,384	B2	1/2009	Ni et al.
7,479,157	B2	1/2009	Weber et al.
7,481,803	B2	1/2009	Kesten et al.
7,485,104	B2	2/2009	Kieval
7,486,805	B2	2/2009	Krattiger
7,487,780	B2	2/2009	Hooven
7,493,154	B2	2/2009	Bonner et al.
7,494,485	B2	2/2009	Beck et al.
7,494,486	B2	2/2009	Mische et al.
7,494,488	B2	2/2009	Weber
7,494,661	B2	2/2009	Sanders
7,495,439	B2	2/2009	Wiggins
7,497,858	B2	3/2009	Chapelon et al.
7,499,745	B2	3/2009	Littrup et al.
7,500,985	B2	3/2009	Saadat
7,505,812	B1	3/2009	Eggers et al.
7,505,816	B2	3/2009	Schmeling et al.
7,507,233	B2	3/2009	Littrup et al.
7,507,235	B2	3/2009	Keogh et al.
7,511,494	B2	3/2009	Wedeen
7,512,445	B2	3/2009	Truckai et al.
7,527,643	B2	5/2009	Case et al.
7,529,589	B2	5/2009	Williams et al.
7,540,852	B2	6/2009	Nita et al.
7,540,870	B2	6/2009	Babaev
RE40,863	E	7/2009	Tay et al.
7,556,624	B2	7/2009	Laufer et al.
7,558,625	B2	7/2009	Levin et al.
7,563,247	B2	7/2009	Maguire et al.
7,566,319	B2	7/2009	McAuley et al.
7,569,052	B2	8/2009	Phan et al.
7,582,111	B2	9/2009	Krolik et al.
7,584,004	B2	9/2009	Caparso et al.
7,585,835	B2	9/2009	Hill et al.
7,591,996	B2	9/2009	Hwang et al.
7,597,704	B2	10/2009	Frazier et al.
7,598,228	B2	10/2009	Hattori et al.
7,599,730	B2	10/2009	Hunter et al.
7,603,166	B2	10/2009	Casscells, III et al.
7,604,608	B2	10/2009	Nita et al.
7,604,633	B2	10/2009	Truckai et al.
7,615,015	B2	11/2009	Coleman
7,615,072	B2	11/2009	Rust et al.
7,617,005	B2	11/2009	Demarais et al.
7,620,451	B2	11/2009	Demarais et al.
7,621,902	B2	11/2009	Nita et al.
7,621,929	B2	11/2009	Nita et al.
7,626,015	B2	12/2009	Feinstein et al.
7,626,235	B2	12/2009	Kinoshita
7,632,268	B2	12/2009	Edwards et al.
7,632,845	B2	12/2009	Vu et al.
7,635,383	B2	12/2009	Gumm
7,640,046	B2	12/2009	Pastore et al.
7,641,633	B2	1/2010	Laufer et al.
7,641,679	B2	1/2010	Joye et al.
7,646,544	B2	1/2010	Batchko et al.
7,647,115	B2	1/2010	Levin et al.
7,653,438	B2	1/2010	Deem et al.
7,655,006	B2	2/2010	Sauvageau et al.
7,662,114	B2	2/2010	Seip et al.
7,664,548	B2	2/2010	Amurthur et al.
7,670,279	B2	3/2010	Gertner
7,670,335	B2	3/2010	Keidar
7,671,084	B2	3/2010	Mewshaw et al.
7,678,104	B2	3/2010	Keidar
7,678,106	B2	3/2010	Lee
7,678,108	B2	3/2010	Chrisitian et al.
7,691,080	B2	4/2010	Seward et al.
7,699,809	B2	4/2010	Urmey
7,706,882	B2	4/2010	Francischelli et al.
7,715,912	B2	5/2010	Rezai et al.
7,717,853	B2	5/2010	Nita
7,717,909	B2	5/2010	Strul et al.
7,717,948	B2	5/2010	Demarais et al.
7,722,539	B2	5/2010	Carter et al.
7,725,157	B2	5/2010	Dumoulin et al.
7,727,178	B2	6/2010	Wilson et al.
7,736,317	B2	6/2010	Stephens et al.
7,736,360	B2	6/2010	Mody et al.
7,736,362	B2	6/2010	Eberl et al.
7,738,952	B2	6/2010	Yun et al.

(56) **References Cited**

U.S. PATENT DOCUMENTS

7,740,629	B2	6/2010	Anderson et al.
7,741,299	B2	6/2010	Feinstein et al.
7,742,795	B2	6/2010	Stone et al.
7,744,594	B2	6/2010	Yamazaki et al.
7,753,907	B2	7/2010	DiMatteo et al.
7,756,583	B2	7/2010	Demarais et al.
7,758,510	B2	7/2010	Nita et al.
7,758,520	B2	7/2010	Griffin et al.
7,759,315	B2	7/2010	Cuzzocrea et al.
7,766,833	B2	8/2010	Lee et al.
7,766,878	B2	8/2010	Tremaglio, Jr. et al.
7,766,892	B2	8/2010	Keren et al.
7,767,844	B2	8/2010	Lee et al.
7,769,427	B2	8/2010	Shachar
7,771,372	B2	8/2010	Wilson
7,771,421	B2	8/2010	Stewart et al.
7,776,967	B2	8/2010	Perry et al.
7,777,486	B2	8/2010	Hargreaves et al.
7,780,660	B2	8/2010	Bourne et al.
7,789,876	B2	9/2010	Zikorus et al.
7,792,568	B2	9/2010	Zhong et al.
7,799,021	B2	9/2010	Leung et al.
7,803,168	B2	9/2010	Gifford et al.
7,806,871	B2	10/2010	Li et al.
7,811,265	B2	10/2010	Hering et al.
7,811,281	B1	10/2010	Rentrop
7,811,313	B2	10/2010	Mon et al.
7,816,511	B2	10/2010	Kawashima et al.
7,818,053	B2	10/2010	Kassab
7,819,866	B2	10/2010	Bednarek
7,822,460	B2	10/2010	Halperin et al.
7,828,837	B2	11/2010	Khoury
7,832,407	B2	11/2010	Gertner
7,833,220	B2	11/2010	Mon et al.
7,837,676	B2	11/2010	Sinelnikov et al.
7,837,720	B2	11/2010	Mon
7,841,978	B2	11/2010	Gertner
7,846,157	B2	12/2010	Kozel
7,846,160	B2	12/2010	Payne et al.
7,846,172	B2	12/2010	Makower
7,849,860	B2	12/2010	Makower et al.
7,850,685	B2	12/2010	Kunis et al.
7,853,333	B2	12/2010	Demarais
7,854,734	B2	12/2010	Biggs et al.
7,857,756	B2	12/2010	Warren et al.
7,862,565	B2	1/2011	Eder et al.
7,863,897	B2	1/2011	Slocum, Jr. et al.
7,869,854	B2	1/2011	Shachar et al.
7,873,417	B2	1/2011	Demarais et al.
7,887,538	B2	2/2011	Bleich et al.
7,894,905	B2	2/2011	Pless et al.
7,896,873	B2	3/2011	Hiller et al.
7,901,400	B2	3/2011	Wham et al.
7,901,402	B2	3/2011	Jones et al.
7,901,420	B2	3/2011	Dunn
7,905,862	B2	3/2011	Sampson
7,918,850	B2	4/2011	Govari et al.
7,927,370	B2	4/2011	Webler et al.
7,937,143	B2	5/2011	Demarais et al.
7,938,830	B2	5/2011	Saadat et al.
7,942,874	B2	5/2011	Eder et al.
7,942,928	B2	5/2011	Webler et al.
7,946,976	B2	5/2011	Gertner
7,950,397	B2	5/2011	Thapliyal et al.
7,955,293	B2	6/2011	Nita et al.
7,956,613	B2	6/2011	Wald
7,959,627	B2	6/2011	Utley et al.
7,962,854	B2	6/2011	Vance et al.
7,967,782	B2	6/2011	Laufer et al.
7,967,808	B2	6/2011	Fitzgerald et al.
7,972,327	B2	7/2011	Eberl et al.
7,972,330	B2	7/2011	Alejandro et al.
7,983,751	B2	7/2011	Zdeblick et al.
8,001,976	B2	8/2011	Gertner
8,007,440	B2	8/2011	Magnin et al.
8,012,147	B2	9/2011	Lafontaine
8,019,435	B2	9/2011	Hastings et al.
8,021,362	B2	9/2011	Deem et al.
8,021,413	B2	9/2011	Dierking et al.
8,025,661	B2	9/2011	Arnold et al.
8,027,718	B2	9/2011	Spinner et al.
8,031,927	B2	10/2011	Karl et al.
8,033,284	B2	10/2011	Porter et al.
8,048,144	B2	11/2011	Thistle et al.
8,052,636	B2	11/2011	Moll et al.
8,052,700	B2	11/2011	Dunn
8,062,289	B2	11/2011	Babaev
8,075,580	B2	12/2011	Makower
8,080,006	B2	12/2011	Lafontaine et al.
8,088,127	B2	1/2012	Mayse et al.
8,116,883	B2	2/2012	Williams et al.
8,119,183	B2	2/2012	O'Donoghue et al.
8,120,518	B2	2/2012	Jang et al.
8,123,741	B2	2/2012	Marrouche et al.
8,128,617	B2	3/2012	Bencini et al.
8,131,371	B2	3/2012	Demarals et al.
8,131,372	B2	3/2012	Levin et al.
8,131,382	B2	3/2012	Asada
8,137,274	B2	3/2012	Weng et al.
8,140,170	B2	3/2012	Rezai et al.
8,143,316	B2	3/2012	Ueno
8,145,316	B2	3/2012	Deem et al.
8,145,317	B2	3/2012	Demarais et al.
8,150,518	B2	4/2012	Levin et al.
8,150,519	B2	4/2012	Demarais et al.
8,150,520	B2	4/2012	Demarais et al.
8,152,830	B2	4/2012	Gumm
8,162,933	B2	4/2012	Francischelli et al.
8,175,711	B2	5/2012	Demarais et al.
8,187,261	B2	5/2012	Watson
8,190,238	B2	5/2012	Moll et al.
8,192,053	B2	6/2012	Owen et al.
8,198,611	B2	6/2012	LaFontaine et al.
8,214,056	B2	7/2012	Hoffer et al.
8,221,407	B2	7/2012	Phan et al.
8,226,637	B2	7/2012	Satake
8,231,617	B2	7/2012	Satake
8,241,217	B2	8/2012	Chiang et al.
8,257,724	B2	9/2012	Cromack et al.
8,257,725	B2	9/2012	Cromack et al.
8,260,397	B2	9/2012	Ruff et al.
8,263,104	B2	9/2012	Ho et al.
8,273,023	B2	9/2012	Razavi
8,277,379	B2	10/2012	Lau et al.
8,287,524	B2	10/2012	Siegel
8,287,532	B2	10/2012	Carroll et al.
8,292,881	B2	10/2012	Brannan et al.
8,293,703	B2	10/2012	Averback et al.
8,295,902	B2	10/2012	Salahieh et al.
8,295,912	B2	10/2012	Gertner
8,308,722	B2	11/2012	Ormsby et al.
8,317,776	B2	11/2012	Ferren et al.
8,317,810	B2	11/2012	Stangenes et al.
8,329,179	B2	12/2012	Ni et al.
8,336,705	B2	12/2012	Okahisa
8,343,031	B2	1/2013	Gertner
8,343,145	B2	1/2013	Brannan
8,347,891	B2	1/2013	Demarais et al.
8,353,945	B2	1/2013	Andreas et al.
8,364,237	B2	1/2013	Stone et al.
8,366,615	B2	2/2013	Razavi
8,382,697	B2	2/2013	Brenneman et al.
8,388,680	B2	3/2013	Starksen et al.
8,396,548	B2	3/2013	Perry et al.
8,398,629	B2	3/2013	Thistle
8,401,667	B2	3/2013	Gustus et al.
8,403,881	B2	3/2013	Ferren et al.
8,406,877	B2	3/2013	Smith et al.
8,409,172	B2	4/2013	Moll et al.
8,409,193	B2	4/2013	Young et al.
8,409,195	B2	4/2013	Young
8,418,362	B2	4/2013	Zerfas et al.
8,452,988	B2	5/2013	Wang
8,454,594	B2	6/2013	Demarais et al.

(56) **References Cited**

U.S. PATENT DOCUMENTS

8,460,358 B2 6/2013 Andreas et al.
8,465,452 B2 6/2013 Kassab
8,469,919 B2 6/2013 Ingle et al.
8,473,067 B2 6/2013 Hastings et al.
8,480,663 B2 7/2013 Ingle et al.
8,485,992 B2 7/2013 Griffin et al.
8,486,060 B2 7/2013 Kotmel et al.
8,486,063 B2 7/2013 Werneth et al.
8,488,591 B2 7/2013 Miali et al.
2001/0007070 A1 7/2001 Stewart et al.
2001/0039419 A1 11/2001 Francischelli et al.
2001/0051774 A1 12/2001 Littrup et al.
2002/0022864 A1 2/2002 Mahvi et al.
2002/0042639 A1 4/2002 Murphy-Chutorian et al.
2002/0045811 A1 4/2002 Kittrell et al.
2002/0045890 A1 4/2002 Celliers et al.
2002/0062123 A1 5/2002 McClurken et al.
2002/0062146 A1 5/2002 Makower et al.
2002/0065542 A1 5/2002 Lax et al.
2002/0072686 A1 6/2002 Hoey et al.
2002/0077592 A1 6/2002 Barry
2002/0082552 A1 6/2002 Ding et al.
2002/0087151 A1 7/2002 Mody et al.
2002/0087156 A1 7/2002 Maguire et al.
2002/0091381 A1* 7/2002 Edwards 606/41
2002/0095197 A1 7/2002 Lardo et al.
2002/0107511 A1 8/2002 Collins et al.
2002/0107536 A1 8/2002 Hussein
2002/0143324 A1 10/2002 Edwards
2002/0147480 A1 10/2002 Mamayek
2002/0169444 A1 11/2002 Mest et al.
2002/0198520 A1 12/2002 Coen et al.
2003/0004510 A1 1/2003 Wham et al.
2003/0028114 A1 2/2003 Casscells, III et al.
2003/0050635 A1 3/2003 Truckai et al.
2003/0060857 A1 3/2003 Perrson et al.
2003/0060858 A1 3/2003 Kieval et al.
2003/0065317 A1 4/2003 Rudie et al.
2003/0069619 A1 4/2003 Fenn et al.
2003/0088189 A1 5/2003 Tu et al.
2003/0092995 A1 5/2003 Thompson
2003/0114791 A1 6/2003 Rosenthal et al.
2003/0139689 A1 7/2003 Shturman et al.
2003/0195501 A1 10/2003 Sherman et al.
2003/0199747 A1 10/2003 Michlitsch et al.
2003/0212394 A1 11/2003 Pearson et al.
2003/0220639 A1 11/2003 Chapelson et al.
2003/0229340 A1 12/2003 Sherry et al.
2003/0229384 A1 12/2003 Mon
2004/0006333 A1 1/2004 Arnold et al.
2004/0006359 A1* 1/2004 Laguna 606/192
2004/0010118 A1 1/2004 Zerhusen et al.
2004/0019348 A1 1/2004 Stevens et al.
2004/0024371 A1 2/2004 Plicchi et al.
2004/0043030 A1 3/2004 Griffiths et al.
2004/0062852 A1 4/2004 Schroeder et al.
2004/0064090 A1 4/2004 Keren et al.
2004/0064093 A1 4/2004 Hektner et al.
2004/0073206 A1 4/2004 Foley et al.
2004/0088002 A1 5/2004 Boyle et al.
2004/0093055 A1 5/2004 Bartorelli et al.
2004/0106871 A1 6/2004 Hunyor et al.
2004/0111016 A1 6/2004 Casscells, III et al.
2004/0117032 A1 6/2004 Roth
2004/0122421 A1 6/2004 Wood
2004/0147915 A1 7/2004 Hasebe
2004/0162555 A1 8/2004 Farley et al.
2004/0167506 A1 8/2004 Chen
2004/0181165 A1 9/2004 Hoey et al.
2004/0186356 A1 9/2004 O'Malley et al.
2004/0186468 A1 9/2004 Edwards
2004/0187875 A1 9/2004 He et al.
2004/0193211 A1 9/2004 Voegele et al.
2004/0220556 A1 11/2004 Cooper et al.
2004/0243022 A1 12/2004 Carney et al.
2004/0243199 A1 12/2004 Mon et al.
2004/0253304 A1 12/2004 Gross et al.
2004/0267250 A1 12/2004 Yon et al.
2005/0010095 A1 1/2005 Stewart et al.
2005/0010208 A1 1/2005 Winston et al.
2005/0015125 A1 1/2005 Mioduski et al.
2005/0033136 A1 2/2005 Govari et al.
2005/0080374 A1 4/2005 Esch et al.
2005/0090820 A1 4/2005 Cornelius et al.
2005/0096647 A1 5/2005 Steinke et al.
2005/0129616 A1 6/2005 Salcedo et al.
2005/0137180 A1 6/2005 Robinson et al.
2005/0143817 A1 6/2005 Hunter et al.
2005/0148842 A1 7/2005 Wang et al.
2005/0149069 A1 7/2005 Bertolero et al.
2005/0149080 A1 7/2005 Hunter et al.
2005/0149158 A1 7/2005 Hunter et al.
2005/0149173 A1 7/2005 Hunter et al.
2005/0149175 A1 7/2005 Hunter et al.
2005/0154277 A1 7/2005 Tang et al.
2005/0154445 A1 7/2005 Hunter et al.
2005/0154453 A1 7/2005 Hunter et al.
2005/0154454 A1 7/2005 Hunter et al.
2005/0165389 A1 7/2005 Swain et al.
2005/0165391 A1 7/2005 Maguire et al.
2005/0165467 A1 7/2005 Hunter et al.
2005/0165488 A1 7/2005 Hunter et al.
2005/0175661 A1 8/2005 Hunter et al.
2005/0175662 A1 8/2005 Hunter et al.
2005/0175663 A1 8/2005 Hunter et al.
2005/0177103 A1 8/2005 Hunter et al.
2005/0177225 A1 8/2005 Hunter et al.
2005/0181004 A1 8/2005 Hunter et al.
2005/0181008 A1 8/2005 Hunter et al.
2005/0181011 A1 8/2005 Hunter et al.
2005/0181977 A1 8/2005 Hunter et al.
2005/0182479 A1 8/2005 Bonsignore et al.
2005/0183728 A1 8/2005 Hunter et al.
2005/0186242 A1 8/2005 Hunter et al.
2005/0186243 A1 8/2005 Hunter et al.
2005/0191331 A1 9/2005 Hunter et al.
2005/0203410 A1 9/2005 Jenkins
2005/0203434 A1 9/2005 Kassab
2005/0203498 A1 9/2005 Mon et al.
2005/0209587 A1 9/2005 Joye et al.
2005/0214205 A1 9/2005 Salcedo et al.
2005/0214207 A1 9/2005 Salcedo et al.
2005/0214208 A1 9/2005 Salcedo et al.
2005/0214209 A1 9/2005 Salcedo et al.
2005/0214210 A1 9/2005 Salcedo et al.
2005/0214268 A1 9/2005 Cavanagh et al.
2005/0228286 A1 10/2005 Messerly et al.
2005/0228415 A1 10/2005 Gertner
2005/0228460 A1 10/2005 Levin et al.
2005/0232921 A1 10/2005 Rosen et al.
2005/0234312 A1 10/2005 Suzuki et al.
2005/0245862 A1 11/2005 Seward et al.
2005/0251116 A1 11/2005 Steinke et al.
2005/0252553 A1 11/2005 Ginggen
2005/0256398 A1 11/2005 Hastings et al.
2005/0267556 A1 12/2005 Shuros et al.
2005/0283195 A1 12/2005 Pastore et al.
2006/0004323 A1 1/2006 Chang et al.
2006/0018949 A1 1/2006 Ammon et al.
2006/0024564 A1 2/2006 Manclaw et al.
2006/0025765 A1 2/2006 Landman et al.
2006/0062786 A1 3/2006 Salcedo et al.
2006/0083194 A1 4/2006 Dhrimaj et al.
2006/0085054 A1 4/2006 Zikorus et al.
2006/0089637 A1 4/2006 Werneth et al.
2006/0089638 A1 4/2006 Carmel et al.
2006/0095096 A1 5/2006 DeBenedictis et al.
2006/0106375 A1 5/2006 Werneth et al.
2006/0142790 A1 6/2006 Gertner
2006/0147492 A1 7/2006 Hunter et al.
2006/0149166 A1 7/2006 Zvuloni
2006/0167106 A1 7/2006 Zhang et al.
2006/0167498 A1 7/2006 DiLorenzo
2006/0171895 A1 8/2006 Bucay-Couto

(56) **References Cited**

U.S. PATENT DOCUMENTS

2006/0184060 A1 8/2006 Belacazar et al.
2006/0184221 A1 8/2006 Stewart et al.
2006/0195139 A1 8/2006 Gertner
2006/0206150 A1 9/2006 Demarais et al.
2006/0224153 A1 10/2006 Fischell et al.
2006/0235286 A1 10/2006 Stone et al.
2006/0239921 A1 10/2006 Mangat et al.
2006/0240070 A1 10/2006 Cromack et al.
2006/0246143 A1 11/2006 Ege
2006/0247266 A1 11/2006 Yamada et al.
2006/0247760 A1 11/2006 Ganesan et al.
2006/0263393 A1 11/2006 Demopulos et al.
2006/0269555 A1 11/2006 Salcedo et al.
2006/0271111 A1 11/2006 Demarais et al.
2006/0280858 A1 12/2006 Kokish
2006/0287644 A1 12/2006 Inganas et al.
2007/0016184 A1 1/2007 Cropper et al.
2007/0016274 A1 1/2007 Boveja et al.
2007/0027390 A1 2/2007 Maschke et al.
2007/0043077 A1 2/2007 Mewshaw et al.
2007/0043409 A1 2/2007 Brian et al.
2007/0049924 A1 3/2007 Rahn
2007/0066972 A1 3/2007 Ormsby et al.
2007/0073151 A1 3/2007 Lee
2007/0078435 A1 4/2007 Stone et al.
2007/0093710 A1 4/2007 Maschke
2007/0100405 A1 5/2007 Thompson et al.
2007/0106247 A1 5/2007 Burnett et al.
2007/0112327 A1 5/2007 Yun et al.
2007/0118107 A1 5/2007 Francischelli et al.
2007/0129760 A1 6/2007 Demarais et al.
2007/0129761 A1 6/2007 Demarais et al.
2007/0135875 A1 6/2007 Demarais et al.
2007/0149963 A1 6/2007 Matsukuma et al.
2007/0162109 A1 7/2007 Davila et al.
2007/0173805 A1 7/2007 Weinberg et al.
2007/0173899 A1 7/2007 Levin et al.
2007/0179496 A1 8/2007 Swoyer et al.
2007/0197891 A1 8/2007 Shachar et al.
2007/0203480 A1 8/2007 Mody et al.
2007/0207186 A1 9/2007 Scanlon et al.
2007/0208134 A1 9/2007 Hunter et al.
2007/0208210 A1 9/2007 Gelfand et al.
2007/0208256 A1 9/2007 Marilla
2007/0208301 A1 9/2007 Evard et al.
2007/0219576 A1 9/2007 Cangialosi
2007/0225781 A1 9/2007 Saadat et al.
2007/0233170 A1 10/2007 Gertner
2007/0239062 A1 10/2007 Chopra et al.
2007/0248639 A1 10/2007 Demopulos et al.
2007/0249703 A1 10/2007 Mewshaw et al.
2007/0254833 A1 11/2007 Hunter et al.
2007/0265687 A1 11/2007 Deem et al.
2007/0278103 A1 12/2007 Hoerr et al.
2007/0282302 A1 12/2007 Wachsman et al.
2007/0292411 A1 12/2007 Salcedo et al.
2007/0293782 A1 12/2007 Marino
2007/0299043 A1 12/2007 Hunter et al.
2008/0004673 A1 1/2008 Rossing et al.
2008/0009927 A1 1/2008 Vilims
2008/0015501 A1 1/2008 Gertner
2008/0021408 A1 1/2008 Jacobsen et al.
2008/0033049 A1 2/2008 Mewshaw
2008/0039746 A1 2/2008 Hissong et al.
2008/0039830 A1 2/2008 Munger et al.
2008/0051454 A1 2/2008 Wang
2008/0064957 A1 3/2008 Spence
2008/0071269 A1 3/2008 Hilario et al.
2008/0071306 A1 3/2008 Gertner
2008/0082109 A1 4/2008 Moll et al.
2008/0086072 A1 4/2008 Bonutti et al.
2008/0091193 A1 4/2008 Kauphusman et al.
2008/0097251 A1 4/2008 Babaev
2008/0097426 A1 4/2008 Root et al.
2008/0108867 A1 5/2008 Zhou
2008/0119879 A1 5/2008 Brenneman et al.
2008/0125772 A1 5/2008 Stone et al.
2008/0132450 A1 6/2008 Lee et al.
2008/0140002 A1 6/2008 Ramzipoor et al.
2008/0147002 A1 6/2008 Gertner
2008/0161662 A1 7/2008 Golijanin et al.
2008/0161717 A1 7/2008 Gertner
2008/0161801 A1 7/2008 Steinke et al.
2008/0171974 A1 7/2008 Lafontaine et al.
2008/0172035 A1 7/2008 Starksen et al.
2008/0172104 A1 7/2008 Kieval et al.
2008/0188912 A1 8/2008 Stone et al.
2008/0188913 A1 8/2008 Stone et al.
2008/0208162 A1 8/2008 Joshi
2008/0208169 A1 8/2008 Boyle et al.
2008/0213331 A1 9/2008 Gelfand et al.
2008/0215117 A1 9/2008 Gross
2008/0221448 A1 9/2008 Khuri-Yakub et al.
2008/0234790 A1 9/2008 Bayer et al.
2008/0243091 A1 10/2008 Humphreys et al.
2008/0245371 A1 10/2008 Gruber
2008/0249525 A1 10/2008 Lee et al.
2008/0249547 A1 10/2008 Dunn
2008/0255550 A1 10/2008 Bell
2008/0255642 A1 10/2008 Zarins et al.
2008/0262489 A1 10/2008 Steinke
2008/0275484 A1 11/2008 Gertner
2008/0281312 A1 11/2008 Werneth et al.
2008/0281347 A1 11/2008 Gertner
2008/0287918 A1 11/2008 Rosenman et al.
2008/0294037 A1 11/2008 Richter
2008/0300618 A1 12/2008 Gertner
2008/0312644 A1 12/2008 Fourkas et al.
2008/0312673 A1 12/2008 Viswanathan et al.
2008/0317818 A1 12/2008 Griffith et al.
2008/0319350 A1* 12/2008 Wallace et al. 600/587
2009/0018486 A1 1/2009 Goren et al.
2009/0018609 A1 1/2009 DiLorenzo
2009/0024194 A1 1/2009 Arcot-Krishnamurthy et al.
2009/0030312 A1 1/2009 Hadjicostis
2009/0036948 A1 2/2009 Levin et al.
2009/0043372 A1 2/2009 Northrop et al.
2009/0054082 A1 2/2009 Kim et al.
2009/0062873 A1 3/2009 Wu et al.
2009/0069671 A1 3/2009 Anderson
2009/0074828 A1 3/2009 Alexis et al.
2009/0076409 A1 3/2009 Wu et al.
2009/0088735 A1 4/2009 Abboud et al.
2009/0105631 A1 4/2009 Kieval
2009/0112202 A1 4/2009 Young
2009/0118620 A1 5/2009 Tgavalekos et al.
2009/0118726 A1 5/2009 Auth et al.
2009/0125099 A1 5/2009 Weber et al.
2009/0131798 A1 5/2009 Minar et al.
2009/0143640 A1 6/2009 Saadat et al.
2009/0156988 A1 6/2009 Ferren et al.
2009/0157057 A1 6/2009 Ferren et al.
2009/0157161 A1 6/2009 Desai et al.
2009/0171333 A1 7/2009 Hon
2009/0192558 A1 7/2009 Whitehurst et al.
2009/0198223 A1 8/2009 Thilwind et al.
2009/0203962 A1 8/2009 Miller et al.
2009/0203993 A1 8/2009 Mangat et al.
2009/0204170 A1 8/2009 Hastings et al.
2009/0210953 A1 8/2009 Moyer et al.
2009/0216317 A1 8/2009 Cromack et al.
2009/0221955 A1 9/2009 Babaev
2009/0226429 A1 9/2009 Salcedo et al.
2009/0240249 A1 9/2009 Chan et al.
2009/0247933 A1 10/2009 Maor et al.
2009/0247966 A1 10/2009 Gunn et al.
2009/0248012 A1 10/2009 Maor et al.
2009/0253974 A1 10/2009 Rahme
2009/0264755 A1 10/2009 Chen et al.
2009/0270850 A1 10/2009 Zhou et al.
2009/0281533 A1 11/2009 Ingle et al.
2009/0287137 A1 11/2009 Crowley
2009/0318749 A1 12/2009 Stolen et al.
2010/0009267 A1 1/2010 Chase et al.

(56) **References Cited**

U.S. PATENT DOCUMENTS

2010/0030061	A1	2/2010	Canfield et al.
2010/0048983	A1	2/2010	Ball et al.
2010/0049099	A1	2/2010	Thapliyal et al.
2010/0049186	A1	2/2010	Ingle et al.
2010/0049188	A1	2/2010	Nelson et al.
2010/0049191	A1	2/2010	Habib et al.
2010/0049283	A1	2/2010	Johnson
2010/0069837	A1	3/2010	Rassat et al.
2010/0076299	A1	3/2010	Gustus et al.
2010/0076425	A1	3/2010	Carroux
2010/0087782	A1	4/2010	Ghaffari et al.
2010/0106005	A1	4/2010	Karczmar et al.
2010/0114244	A1	5/2010	Manda et al.
2010/0125239	A1	5/2010	Perry et al.
2010/0125268	A1	5/2010	Gustus et al.
2010/0130836	A1	5/2010	Malchano et al.
2010/0137860	A1	6/2010	Demarais et al.
2010/0137952	A1	6/2010	Demarais et al.
2010/0160903	A1	6/2010	Krespi
2010/0160906	A1	6/2010	Jarrard
2010/0168624	A1	7/2010	Sliwa
2010/0168731	A1	7/2010	Wu et al.
2010/0168739	A1	7/2010	Wu et al.
2010/0174282	A1	7/2010	Demarais et al.
2010/0191112	A1	7/2010	Demarais et al.
2010/0191232	A1	7/2010	Boveda
2010/0204560	A1	8/2010	Salahieh et al.
2010/0217162	A1	8/2010	Hissong et al.
2010/0222786	A1	9/2010	Kassab
2010/0222851	A1	9/2010	Deem et al.
2010/0222854	A1	9/2010	Demarais et al.
2010/0228122	A1	9/2010	Keenan et al.
2010/0249604	A1	9/2010	Hastings et al.
2010/0249702	A1	9/2010	Magana et al.
2010/0249773	A1	9/2010	Clark et al.
2010/0256616	A1	10/2010	Katoh et al.
2010/0268217	A1	10/2010	Habib
2010/0268307	A1	10/2010	Demarais et al.
2010/0284927	A1	11/2010	Lu et al.
2010/0286684	A1	11/2010	Hata et al.
2010/0298821	A1	11/2010	Garbagnati
2010/0305036	A1	12/2010	Barnes et al.
2010/0312141	A1	12/2010	Keast et al.
2010/0324472	A1	12/2010	Wulfman
2011/0009750	A1	1/2011	Taylor et al.
2011/0021976	A1	1/2011	Li et al.
2011/0034832	A1	2/2011	Cioanta et al.
2011/0040324	A1	2/2011	McCarthy et al.
2011/0044942	A1	2/2011	Puri et al.
2011/0060324	A1	3/2011	Wu et al.
2011/0071400	A1	3/2011	Hastings et al.
2011/0071401	A1	3/2011	Hastings et al.
2011/0077498	A1	3/2011	McDaniel
2011/0092781	A1	4/2011	Gertner
2011/0092880	A1	4/2011	Gertner
2011/0104061	A1	5/2011	Seward
2011/0112400	A1	5/2011	Emery et al.
2011/0118598	A1	5/2011	Gertner
2011/0118600	A1	5/2011	Gertner
2011/0118726	A1	5/2011	De La Rama et al.
2011/0130708	A1	6/2011	Perry et al.
2011/0137155	A1	6/2011	Weber et al.
2011/0144479	A1	6/2011	Hastings et al.
2011/0146673	A1	6/2011	Keast et al.
2011/0166499	A1	7/2011	Demarais et al.
2011/0178403	A1	7/2011	Weng et al.
2011/0178570	A1	7/2011	Demarais
2011/0200171	A1	8/2011	Beetel et al.
2011/0202098	A1	8/2011	Demarais et al.
2011/0207758	A1	8/2011	Sobotka et al.
2011/0208096	A1	8/2011	Demarais et al.
2011/0257523	A1	10/2011	Hastings et al.
2011/0257564	A1	10/2011	Demarais et al.
2011/0257622	A1	10/2011	Salahieh et al.
2011/0257641	A1	10/2011	Hastings et al.
2011/0257642	A1	10/2011	Griggs, III
2011/0263921	A1	10/2011	Vrba et al.
2011/0264011	A1	10/2011	Wu et al.
2011/0264075	A1	10/2011	Leung et al.
2011/0264086	A1	10/2011	Ingle
2011/0264116	A1	10/2011	Kocur et al.
2011/0270238	A1	11/2011	Rizq et al.
2011/0306851	A1	12/2011	Wang
2011/0307034	A1	12/2011	Hastings et al.
2011/0319809	A1	12/2011	Smith
2012/0029496	A1	2/2012	Smith
2012/0029500	A1	2/2012	Jenson
2012/0029505	A1	2/2012	Jenson
2012/0029509	A1	2/2012	Smith
2012/0029510	A1	2/2012	Haverkost
2012/0029511	A1	2/2012	Smith et al.
2012/0029512	A1	2/2012	Willard et al.
2012/0029513	A1	2/2012	Smith et al.
2012/0059241	A1	3/2012	Hastings et al.
2012/0059286	A1	3/2012	Hastings et al.
2012/0065506	A1	3/2012	Smith
2012/0065554	A1	3/2012	Pikus
2012/0095461	A1	4/2012	Herscher et al.
2012/0101413	A1	4/2012	Beetel et al.
2012/0101490	A1	4/2012	Smith
2012/0101538	A1	4/2012	Ballakur et al.
2012/0109021	A1	5/2012	Hastings et al.
2012/0116382	A1	5/2012	Ku et al.
2012/0116383	A1	5/2012	Mauch et al.
2012/0116392	A1	5/2012	Willard
2012/0116438	A1	5/2012	Salahieh et al.
2012/0116486	A1	5/2012	Naga et al.
2012/0123243	A1	5/2012	Hastings
2012/0123258	A1	5/2012	Willard
2012/0123261	A1	5/2012	Jenson et al.
2012/0123303	A1	5/2012	Sogard et al.
2012/0123406	A1	5/2012	Edmunds et al.
2012/0130289	A1	5/2012	Demarais et al.
2012/0130345	A1	5/2012	Levin et al.
2012/0130359	A1	5/2012	Turovskiy
2012/0130360	A1	5/2012	Buckley et al.
2012/0130362	A1	5/2012	Hastings et al.
2012/0130368	A1	5/2012	Jenson
2012/0130458	A1	5/2012	Ryba et al.
2012/0136344	A1	5/2012	Buckley et al.
2012/0136349	A1	5/2012	Hastings
2012/0136350	A1	5/2012	Goshgarian et al.
2012/0136417	A1	5/2012	Buckley et al.
2012/0136418	A1	5/2012	Buckley et al.
2012/0143181	A1	6/2012	Demarais et al.
2012/0143293	A1	6/2012	Mauch et al.
2012/0143294	A1	6/2012	Clark et al.
2012/0150267	A1	6/2012	Buckley et al.
2012/0157986	A1	6/2012	Stone et al.
2012/0157987	A1	6/2012	Steinke et al.
2012/0157988	A1	6/2012	Stone et al.
2012/0157989	A1	6/2012	Stone et al.
2012/0157992	A1	6/2012	Smith et al.
2012/0157993	A1	6/2012	Jenson et al.
2012/0158101	A1	6/2012	Stone et al.
2012/0158104	A1	6/2012	Huynh et al.
2012/0172837	A1	7/2012	Demarais et al.
2012/0172870	A1	7/2012	Jenson et al.
2012/0184952	A1	7/2012	Jenson et al.
2012/0197198	A1	8/2012	Demarais et al.
2012/0197252	A1	8/2012	Deem et al.
2012/0232409	A1	9/2012	Stahmann et al.
2012/0265066	A1	10/2012	Crow et al.
2012/0265198	A1	10/2012	Crow et al.
2013/0012844	A1	1/2013	Demarais et al.
2013/0012866	A1	1/2013	Deem et al.
2013/0012867	A1	1/2013	Demarais et al.
2013/0013024	A1	1/2013	Levin et al.
2013/0023865	A1	1/2013	Steinke et al.
2013/0035681	A1	2/2013	Subramaniam et al.
2013/0066316	A1	3/2013	Steinke et al.
2013/0085489	A1	4/2013	Fain et al.
2013/0090563	A1	4/2013	Weber
2013/0090578	A1	4/2013	Smith et al.

(56) **References Cited**

U.S. PATENT DOCUMENTS

2013/0090647	A1	4/2013	Smith
2013/0090649	A1	4/2013	Smith et al.
2013/0090650	A1	4/2013	Jenson et al.
2013/0090651	A1	4/2013	Smith
2013/0090652	A1	4/2013	Jenson
2013/0096550	A1	4/2013	Hill
2013/0096553	A1	4/2013	Hill et al.
2013/0096554	A1	4/2013	Groff et al.
2013/0096604	A1	4/2013	Hanson et al.
2013/0110106	A1	5/2013	Richardson
2013/0116687	A1	5/2013	Willard
2013/0165764	A1	6/2013	Scheuermann et al.
2013/0165844	A1	6/2013	Shuros et al.
2013/0165916	A1	6/2013	Mathur et al.
2013/0165917	A1	6/2013	Mathur et al.
2013/0165920	A1	6/2013	Weber et al.
2013/0165923	A1	6/2013	Mathur et al.
2013/0165924	A1	6/2013	Mathur et al.
2013/0165925	A1	6/2013	Mathur et al.
2013/0165926	A1	6/2013	Mathur et al.
2013/0165990	A1	6/2013	Mathur et al.
2013/0172815	A1	7/2013	Perry et al.
2013/0172872	A1	7/2013	Subramaniam et al.
2013/0172877	A1	7/2013	Subramaniam et al.
2013/0172878	A1	7/2013	Smith
2013/0172879	A1	7/2013	Sutermeister
2013/0172880	A1	7/2013	Willard
2013/0172881	A1	7/2013	Hill et al.
2013/0282084	A1*	10/2013	Mathur et al. 607/101

FOREIGN PATENT DOCUMENTS

CN	102271607	A	12/2011
DE	10038737	A1	2/2002
DE	102005041601	A1	4/2007
DE	102008048616	A1	4/2010
EP	558297	A2	9/1993
EP	647435	A1	4/1995
EP	634910	B1	8/1997
EP	868884	A2	10/1998
EP	1005838	A1	6/2000
EP	1053720	A1	11/2000
EP	1064886	A1	1/2001
EP	1180004	A1	2/2002
EP	1181895	A2	2/2002
EP	1297795	A1	6/2002
EP	1264613	A2	12/2002
EP	1286625	A1	3/2003
EP	1332724	A1	8/2003
EP	1335677	B1	8/2003
EP	866675	B1	10/2003
EP	1433448	A1	6/2004
EP	1442719	A1	8/2004
EP	1547537	A1	6/2005
EP	1634542	A1	3/2006
EP	1698296	A1	6/2006
EP	1709922	A1	10/2006
EP	1874211	A2	1/2008
EP	1906853	A2	4/2008
EP	1946712	A1	7/2008
EP	1961394	A2	8/2008
EP	1715798	B1	4/2009
EP	1620156	B1	7/2009
EP	2076193	A2	7/2009
EP	2091455	A2	8/2009
EP	2092957	A1	8/2009
EP	2197533	A1	6/2010
EP	2208506	A1	7/2010
EP	1579889	B1	8/2010
EP	2241279	A1	10/2010
EP	2092957	B1	1/2011
EP	2329859	A1	6/2011
EP	2349044	A1	8/2011
EP	2027882	B1	10/2011
EP	2378956	A2	10/2011
EP	2037840	B1	12/2011
EP	2204134	B1	4/2012
EP	2320821	B1	10/2012
GB	2313062	A	11/1997
GB	2453601	A	4/2009
GB	2456301	A	7/2009
JP	1995-213621	A	8/1995
JP	1995-313603	A	12/1995
JP	2003-510126	A	3/2003
WO	WO 91/03207	A1	3/1991
WO	WO 91/17731	A1	11/1991
WO	WO 92/22239	A1	12/1992
WO	WO 93/20747	A1	10/1993
WO	WO 93/20770	A2	10/1993
WO	WO 94/18896	A1	9/1994
WO	WO 94/28809	A1	12/1994
WO	WO 95/01751	A1	1/1995
WO	WO 95/31142	A1	11/1995
WO	WO 96/34559	A1	11/1996
WO	WO 97/03604	A1	2/1997
WO	WO 97/17104	A1	5/1997
WO	WO 97/20510	A1	6/1997
WO	WO 97/32532	A1	9/1997
WO	WO 97/40760	A1	11/1997
WO	WO 97/45156	A2	12/1997
WO	WO 98/18393	A1	5/1998
WO	WO 98/29030	A1	7/1998
WO	WO 98/34565	A1	8/1998
WO	WO 98/35638	A1	8/1998
WO	WO 98/40023	A1	9/1998
WO	9858588	A1	12/1998
WO	9900060	A1	1/1999
WO	WO 99/00060	A1	1/1999
WO	WO 99/16370	A1	4/1999
WO	WO 99/21608	A1	5/1999
WO	WO 99/34741	A1	7/1999
WO	WO 99/44522	A1	9/1999
WO	WO 00/01313	A1	1/2000
WO	WO 00/10475	A1	3/2000
WO	0047118	A1	8/2000
WO	WO 00/51513	A1	9/2000
WO	WO 00/59394	A1	10/2000
WO	WO 00/62727	A1	10/2000
WO	WO 00/64387	A1	11/2000
WO	WO 00/69376	A1	11/2000
WO	WO 00/72909	A1	12/2000
WO	WO 01/22897	A1	4/2001
WO	WO 01/37746	A1	5/2001
WO	WO 01/87172	A1	5/2001
WO	WO 01/74255	A	10/2001
WO	WO 01/87154	A1	11/2001
WO	WO 01/95820	A1	12/2001
WO	WO 02/15807	A1	2/2002
WO	WO 02/28475	A1	4/2002
WO	WO 02/39915	A1	5/2002
WO	WO 02/058549	A1	8/2002
WO	WO 02/080766	A2	10/2002
WO	WO 02/087679	A2	11/2002
WO	WO 02/089686	A1	11/2002
WO	03026525	A1	4/2003
WO	WO 03/077781	A1	9/2003
WO	WO 2004/047659	A2	6/2004
WO	WO 2004/049976	A1	6/2004
WO	WO 2004/064606	A2	8/2004
WO	WO 2004/069300	A2	8/2004
WO	WO 2004/076146	A2	9/2004
WO	2004100813	A2	11/2004
WO	WO 2004/098694	A1	11/2004
WO	2004110258	A2	12/2004
WO	WO 2004/105807	A2	12/2004
WO	WO 2005/007000	A1	1/2005
WO	WO 2005/037070	A2	4/2005
WO	WO 2005/041748	A2	5/2005
WO	WO 2005/074829	A1	8/2005
WO	WO 2006/041881	A2	4/2006
WO	2006105121	A2	10/2006
WO	WO 2006/105121	A2	10/2006
WO	WO 2006/116198	A2	11/2006

(56) **References Cited**

FOREIGN PATENT DOCUMENTS

WO	WO 2007/011634	A1	1/2007
WO	WO 2007/014063	A2	2/2007
WO	WO 2007/047870	A2	4/2007
WO	WO 2007/113865	A1	10/2007
WO	WO 2007/135431	A2	11/2007
WO	WO 2007/146215	A2	12/2007
WO	2008014465	A2	1/2008
WO	WO 2008/003058	A2	1/2008
WO	WO 2008/009972	A2	1/2008
WO	WO 2008/010150	A2	1/2008
WO	WO 2008/036281	A2	3/2008
WO	WO 2008/049084	A2	4/2008
WO	WO 2008/061152	A2	5/2008
WO	WO 2008/102363	A2	8/2008
WO	WO 2009/036471	A1	3/2009
WO	WO 2009/082635	A1	7/2009
WO	WO 2009/088678	A1	7/2009
WO	WO 2009/113064	A2	9/2009
WO	2009121017	A1	10/2009
WO	WO 2009/121017	A1	10/2009
WO	WO 2009/137819	A1	11/2009
WO	WO 2010/042653	A1	4/2010
WO	WO 2010/048007	A1	4/2010
WO	WO 2010/056771	A1	5/2010
WO	WO 2010/057043	A1	5/2010
WO	2010067360	A2	6/2010
WO	WO 2010/070766	A1	6/2010
WO	2010102310	A2	9/2010
WO	WO 2010/099207	A1	9/2010
WO	WO 2010/120944	A2	10/2010
WO	WO 2010/134503	A1	11/2010
WO	2011005901	A2	1/2011
WO	2011053757	A1	5/2011
WO	2011053772	A1	5/2011
WO	WO 2011/055143	A2	5/2011
WO	WO 2011/060339	A1	5/2011
WO	2011091069	A1	7/2011
WO	2011130534	A2	10/2011
WO	WO 2011/126580	A2	10/2011
WO	2012019156	A1	2/2012
WO	2013049601	A2	4/2013

OTHER PUBLICATIONS

Cardiovascular Technologies, Inc., "Heated Balloon Device Technology" [Presentation], 2007-2008, 11 pages total. Retrieved from: <<http://www.cvtechinc.com/pr/presoCVT_Heated_Balloon_Tech.pdf>>.

Carrington, "Future of CVI: It's All About the Plaque." Diagnostic Imaging Special Edition Forum [online] [retrieved on Sep. 3, 2003] Retreived from the Internet:,http://dimag.com/specialedition/cardiacimg.shtml> 5 pages total.

Cimino, "Preventing Plaque Attack", [online] [retrieved on Sep. 3, 2003] Retrieved from the Internet: <http://Masshightech.com/displayarticledetail.ap?art_id=52283&cat_id=10>, 3 pages total.

Dahm et al, "Relation of Degree of Laser Debulking of In-Stent Restenosis as a Predictor of Restenosis Rate", Am J Cardiol, 2002; 90(1): 68-70.

De Korte C L. et al., "Characterization of Placque Components with Intravascular Ultrasound Elastography in Human Femoral and Coronary Arteries In Vitro," Circulation 2000;102:617-623.

Durney C., et al., Radiofrequency Radiation Dosimetry Handbook (with table of contents), Oct. 1986, 4th ed., 7 pages, Armstrong Laboratory (AFMC) Occupational and Environmental Health Directorate Radiofrequency Radiation Division, USAF School of Aerospace Medicine, Aerospace Medical Division (AFSC), Brooks Air Force Base, http://www.brooks.af.mil/AFRL/HED/hedr/reports/handbook/home.htm.

Fournier-Desseux et al. "Assessment of 1-lead and 2-lead electrode patterns in electrical impedance endotomography", Physiol. Meas. (2005) 26:337-349.

Fujimori et al., "Significant Prevention of In-Stent Restenosis by Evans Blue in Patients with Acute Myocardial Infarction", Abstract #2925, *AHA* (2002), 1 page total.

Fujita, "Sarpogrelate, An Antagonist of 5-HT_{2a} Receptor Treatment Reduces Restenosis After Coronary Stenting", Abstract #2927, *AHA* (2002), 1 page total.

Gabriel C, et al., Compilation of the Dielectric Properties of Body Tissues at RF and Microwave Frequencies (with table of contents), Jun. 1996, 17 pages, Armstrong Laboratory (AFMC) Occupational and Environmental Health Directorate Radiofrequency Radiation Division, USAF School of Aerospace Medicine, Aerospace Medical Division (AFSC), Brooks Air Force Base, http://www.brooks.af.mil/AFRL/HED/hedr/reports/dielectric/Report/Report.html.

Gabriel C, et al., Compilation of the Dielectric Properties of Body Tissues at RF and Microwave Frequencies, Appendi04-10-2009 A, Jun. 1996, 21 pages, Armstrong Laboratory (AFMC) Occupational and Environmental Health Directorate Radiofrequency Radiation Division, USAF School of Aerospace Medicine, Aerospace Medical Division (AFSC), Brooks Air Force Base, http://www.brooks.af.mil/AFRL/HED/hedr/reports/dielectric/Appendi04-10-2009.A/Appendi04-10-2009 A.html.

Gabriel C, et al., Compilation of the Dielectric Properties of Body Tissues at RF and Microwave Frequencies, Appendi04-10-2009 C, Jun. 1996, 6 pages, Armstrong Laboratory (AFMC) Occupational and Environmental Health Directorate Radiofrequency Radiation Division, USAF School of Aerospace Medicine, Aerospace Medical Division (AFSC), Brooks Air Force Base, http://www.brooks.af.mil/AFRL/HED/hedr/reports/dielectric/Appendi04-10-2009.C/Appendi04-10-2009 C.html.

Gregory et al., "Liquid Core Light Guide for Laser Angioplasty", *Journal of Quantum Electronics*, vol. 26, No. 12, (Dec. 1990), pp. 2289-2296.

Intraluminal, Product description [online] [retrieved on Sep. 3, 2003] Retrieved from the Internet: http://www.intraluminal.com/products/inde04-10-2009.html> 1 page total.

Kaplan et al., "Healing after arterial dilatation with radiofrequency thermal and nonthermal balloon angioplasty systems," J Invest Surg. Jan.-Feb. 1993;6(1):33-52.

Kolata, "New Studies Question Value of Opening Arteries", New York Times [online] [retrieved on Jan. 25, 2005]. Retrieved from the Internet: <http://nytimes.com/2004/03/21/health/21HEAR.html?ei=5070&en=641bc03214e&e04-10-2009 =11067>, 5 pages total.

Konings M K, et al., "Development of an Intravascular Impedance Catheter for Detection of Fatty Lesions in Arteries," IEEE Transactions on Medical Imaging, vol. 51, No. 4, Apr. 2004.

Kurtz et al., "Lamellar Refractive Surgery with Scanned Intrastromal Picosecond and Femtosecond Laser Pulses in Animal Eyes", *J Refract Surg*, vol. 14, (Sep./Oct. 1998), pp. 541-548.

LightLab Imaging Technology, "Advantages of OCT", [online] [retrieved on Sep. 3, 2003]. Retrieved from the Internet: <http:www.lightlabimaging.com/advantage.html> 2 pages total.

LightLab Imaging Technology, "Image Gallery", [online] [retrieved on Sep. 3, 2003]. Retrieved from the Internet: <http:lightlabimaging.com/gallery/cvpstill.html> 4 pages total.

LightLab Imaging Technology, "LightLab Imaging Starts US Cardiology Clinical Investigations", LightLab Company Press Release, [online] [retrieved on Sep. 3, 2003]. Retrieved from the Internet: <http://www.lighlabimaging.com/press/cardtrails.html> 2 pages total.

LightLab Imaging Technology, "LightLab Sees Bright Prospects for Cardiac Application of OCT Technology" *The Graysheet Medical Devices Diagnostics & Instrumentation*, vol. 27, No. 35, (Aug. 27, 2001) [online] [retrieved on Sep. 3, 2003]. Retrieved from the Internet: <http://www.lighlabimaging.com/press/graysheet.html> 1 page total.

LightLab Imaging Technology, "What is OCT?", [online] [retrieved on Sep. 3, 2003]. Retrieved from the Internet: <http:lightlabimaging.com/oct.html.> 2 pages total.

LightLab Imaging Technology, "Why use OCT?", [online] [retrieved on Sep. 3, 2003]. Retrieved from the Internet: <http:lightlabimaging.com/whyoct.html> 2 pages total.

(56) **References Cited**

OTHER PUBLICATIONS

Lima et al., "Efficacy and Safety of Oral Sirolimus to Treat and Prevent In-Stent Restenosis: A Pilot Study Results", Abstract #2929, *AHA* (2002), 1 page total.
Lima et al., "Systemic Immunosuppression Inhibits In-Stent Coronary Intimal Proliferation in Renal Transplant Patients", Abstract #2928, *AHA* (2002), 1 page total.
MIT TechTalk, "Laser Catheter to Aid Coronary Surgery", Jan. 9, 1991 [online] [retrieved on Feb. 7, 2005]. Retrieved from the Internet : <http://web.mit.edu/newsoffice/tt/1991/jan09/24037.html> 4 pages total.
Morice et al., "A Randomized Comparison of a Sirolimus-Eluting Stent With a Standard Stent for Coronary Revascularization", *N. Engl J Med*, vol. 346, No. 23, (Jun. 6, 2002), pp. 1773-1779.
Müller et al., "Effectiveness and Safety of Ultrasonic Atherosclerotic Plaque Ablation: In Vitro Investigation", *CardioVas. Intervent. Radiol.*, (1993) 16: 303-307.
Nair A, et al., "Regularized Autoregressive Analysis of Intravascular Ultrasound Backscatter: Improvement in Spatial Accuracy of Tissue Maps," IEEE Transactions on Ultrasonics, Ferroelectrics, and Frequency Control, vol. 51 No. 4, Apr. 2004.
Popma et al., "Chapter 38—Percutaneous Coronary and Valvular Intervention", Heart Disease: A Textbook of Cardiovascular Medicine, 6th ed., (2001) W.B> Saunders Company, pp. 1364-1405.
Romer et al., "Histopathology of Human Coronary Atherosclerosis by Quantifying Its Chemical Composition with Raman Spectroscopy," Circulation 97:878-885 (1998).
Scheller et al., "Potential Solutions to the Current Problem: Coated Balloon," EuroIntervention, Aug. 2008; 4 Suppl C: C63-66.
Scheller, "Intracoronary Paclitaxel Added to Contrast Media Inhibits In-Stent Restenosis of Porcine Coronary Arteries", Abstract #2227, AHA (2002), 2 pages total.
Shaffer, "Scientific Basis of Laser Energy", *Clin Sports Med* 2002; 21(4):585-598.
Shmatukha A V, et al., "MRI temperature mapping during thermal balloon angioplasty," Phys Med Biol 51, (2006) N163-N171.
Slager et al., "Vaporization of Atherosclerotic Placques by Spark Erosion," J Am Coll Cardiol, vol. 5 (Jun. 1985) pp. 1382-1386.
Stiles et al., "Simulated Charactization of Atherosclerotic Lesions in the Coronary Arteries by Measurement of Bioimpedance," IEEE Transactions on Biomedical Engineering, (Jul. 2003), 5(4):916-921.
Süselbeck et al. "Intravascular electric impedance spectroscopy of atherosclerotic lesions using a new impedance system", Basic Res Cardiol (2005) 100:446-452.
Suselbeck T, et al., "In vivo intravascular electrical impedance spectroscopy using a new catheter with integrated microelectrodes," Basic Res Cardiol 100:28-34 (2005).
Tepe et al., "Local Delivery of Paclitaxel to Inhibit Restenosis During Angioplasty of the Leg," N Engl J Med, Feb. 14, 2008; 358(7): 689-699; retrieved from the Internet: <<http://content.nejm.org/cgi/reprint/358/7/689.pdf>>.
Van Den Berg, "Light Echoes Image the Human Body", *OLE*, Oct. 2001, pp. 35-37.
Volcano Therapeutics, "Product—Functional Measurement", [online] [retrieved on Sep. 3, 2003]. Retrieved from the Internet: <http://www.volcanotherapeutics.com/pages/products/functional_measurement-us.html> 2 pages total.
Examiner's Report of Canadian Patent Application No. 2,539,026, mailed Feb. 6, 2012, 4 pages total.
Office Action issued in Chinese Patent Application No. 200480030163.9, mailed Jan. 16, 2009, 8 pages total.
Office Action issued in Chinese Patent Application No. 200480030163.9, mailed Mar. 28, 2008, 7 pages total.
Office Action issued in Chinese Patent Application No. 200480030163.9, mailed Aug. 31, 2007, 8 pages total.
Office Action issued in Chinese Patent Application No. 200480030163.9, mailed Jul. 31, 2009, 5 pages total.
Supplementary Partial European Search Report of Application No. 04816863.7, mailed May 8, 2009, 7 pages total.
Office Action issued in European Application No. 04816863.7, mailed Jun. 4, 2010, 5 pages total.
Office Action issued in European Application No. 04816863.7, mailed Dec. 5, 2011, 4 pages total.
Office Action issued in European Application No. 04816863.7, mailed Jan. 22, 2010, 6 pages total.
Formal Inquiry issued in Japanese Patent Application No. 2006-526351, mailed Jan. 17, 2012, 5 pages total.
Notice of the Reason for Refusal issued in Japanese Patent Application No. 2006-526351, mailed Apr. 27, 2010, 6 pages total.
Final Decision of Rejection issued in Japanese Patent Application No. 2006-526351, mailed Jan. 18, 2011, 4 pages total.
European Search Report and Search Opinion of EP Patent Application No. 12151957.3, mailed Apr. 16, 2012, 8 pages total.
Office Action issued in Chinese Patent Application No. 200680016424.0, mailed Apr. 13, 2010, 10 pages total.
European Search Report and Search Opinion of EP Patent Application No. 06748830.4, mailed Nov. 16, 2009, 12 pages total.
Partial European Search Report of EP Patent Application No. 11191822.3, mailed Mar. 19, 2012, 7 pages total.
Office Action issued in Chinese Patent Application No. 20111031923.X, mailed Nov. 17, 2011, 16 pages total.
Office Action issued in Chinese Patent Application No. 20111031923.X, mailed May 22, 2012, 10 pages total.
Examiner's First Report of Australian Patent Application No. 2007310988, mailed May 23, 2012, 4 pages total.
European Search Report and Search Opinion of EP Patent Application No. 07844421.3, mailed Jan. 4, 2010, 15 pages total.
European Search Report and Search Opinion of EP Patent Application No. 12155447.1, mailed May 10, 2012, 6 pages total.
International Search Report and Written Opinion of PCT Application No. PCT/US2009/064027, mailed Jan. 19, 2010, 9 pages total.
European Search Report and Search Opinion of EP Patent Application No. 07844417.1, mailed Nov. 5, 2009.
European Search Report and Search Opinion of EP Patent Application No. 12154120.5, mailed May 8, 2012, 8 pages total.
European Search Report and Search Opinion of EP Patent Application No. 07844424.7, mailed Nov. 11, 2009, 11 pages total.
Partial European Search Report of EP Patent Application No. 12154069.4, mailed May 10, 2012, 5 pages total.
International Search Report and Written Opinion of PCT Application No. PCT/US2009/064465, mailed Jan. 13, 2010, 13 pages total.
International Search Report of PCT Application No. PCT/US09/57728, mailed Nov. 30, 2009, 10 pages total. (2410PC).
International Search Report and Written Opinion of PCT/US2010/034789, mailed Jul. 9, 2010, 13 pages total.
International Search Report and Written Opinion of PCT/US2011/00661, mailed Nov. 18, 2011, 14 pages total.
Brown et al., "Observations on the shrink temperature of collagen and its variations with age and disease," Ann Rheum Dis, Jun. 1, 1958, 17(2):196-208.
Notice of the Reason for Refusal issued in Japanese Patent Application No. 2009-533544, mailed Jun. 19, 2012, 3 pages total.
Summons to Attend Oral Proceedings of EP Patent Application No. 07844424.7, mailed Jul. 5, 2012, 7 pages total.
European Search Report and Search Opinion of EP Patent Application No. 11191822.3, mailed Jun. 13, 2012, 13 pages total.
Office Action issued in European Application No. 07844421.3, mailed Aug. 23, 2012, 5 pages total.
Notice of the Reason for Refusal issued in Japanese Patent Application No. 2009-533546, mailed Jun. 19, 2012, 6 pages total.
Extended European Search Report and Search Opinion of EP Patent Application No. 12154069.4, mailed Sep. 17, 2012, 13 pages total.
Notice of the Reason for Refusal issued in Japanese Patent Application No. 2006-526351, mailed Sep. 18, 2012, 20 pages total.
Office Action issued in Chinese Patent Application No. 201110031923.X, mailed on Sep. 6, 2012, 11 pages total.
Office Action issued in Australian Patent Application No. 2010248955, mailed Sep. 13, 2012, 4 pages total.
CardioVascular Technologies Inc., "Heated Balloon Device Technology," 11 pages, 2008.
Strategic Business Development, Inc., "Thermal and Disruptive Angioplasty: A Physician's Guide," 8 pages, 1990.

(56) **References Cited**

OTHER PUBLICATIONS

Zhang et al., "Non-contact Radio-Frequency Ablation for Obtaining Deeper Lesions," IEEE Transaction on Biomedical Engineering, vol. 50, No. 2, 6 pages, Feb. 2003.
Lazebnik et al., "Tissue Strain Analytics Virtual Touch Tissue Imaging and Qualification," Siemens Whitepaper, Oct. 2008, 7 pages.
Zhou et al., "Mechanism Research of Ciyoanalgesia," Forefront Publishing Group, 1995.
Florete, "Cryoblative Procedure for Back Pain," Jacksonville Medicine, Oct. 1998, 10 pages.
Stevenson, "Irrigated RF Ablation: Power Titration and Fluid Management for Optimal Safety Efficacy," 2005, 4 pages.
Giliatt et al., "The Cause of Nerve Damage in Acute Compression," Trans Am Neurol Assoc, 1974: 99; 71-4.
Baun, "Interaction with Soft Tissue," Principles of General & Vascular Sonography, Chapter 2, pp. 23-24, Before Mar. 2012.
Blue Cross Blue Shield Medicaly Policy, "Surgery Section-MRI-Guided Focused Ultrasound (MRgFUS) for the Treatment of Uterine Fibroids and Other Tumors," 2005, 5 pages.
Gentry et al., "Combines 3D Intracardiac Echo and Ultrasound Ablation," Medical Imaging 2003: Ultrasonic and Signal Processing, vol. 5035, 2003, pp. 166-173.
Lafon et al., "Optmizing the Shape of Ultrasound Transducers for Interstitial Thermal Ablations," MEd Phys. Mar. 2002; 29(3): 290-7 (abstract only).
G. Ter Haar, "Ultrasound Focal Beam Surgery," Ultrasound in Med. & Biol., 1995, vol. 21, No. 9, pp. 1089-1100.
Seip et al., "Transurethral High Intensity Focused Ultrasound: Catheter Based Prototypes and Experimental Results," IEEE Ultrasonics Symposium Proceeding, 2000, 4 pages.
Toytman et al., "Tissue Dissection with Ultrafast Laser Using Extended and Multiple Foci," SPIE Proceeding, Optical Interactions with Tissues and Cells XXI, vol. 7562, 2010, 10 pages.
Zhoue et al., "Non-Thermal Ablation of Rabbit Liver VX2 Tumore by Pulsed High Intensity Focused Ultrasound Contrast Agent: Pathological Characteristics," World Journal of Gastroenterology, vol. 14(43), Nov. 21, 2008, pp. 6743-6747.
US 8398630 B2, 03/2013, Demarais et al., Withdrawn.
Van Den Berg, "Light echoes image the human body," OLE, Oct. 2001, p. 35-37.
"IntraLuminal: Products," IntraLuminal Therapeutics, Inc., 2003, p. 1-9.
"Laser Catheter to Aid Coronary Surgery," TechTalk: MIT, Jan. 9, 1991, p. 1-4.
"Optical Coherence Tomography: LightLab Imaging Starts US Cardiology Clinical Investigations," LightLab Imaging Technology, 2002.
"Optical Coherence Tomography: LightLab Sees Bright Prospects for Cardiac Application of OCT Technology," LightLab Imaging Technology, 2001, vol. 27, No. 35.
"Products—Functional Measurement," VOLCANO Functional Measurement Products US, Mar. 24, 2003, p. 1-2.
Brown et al., "Radiofrequency capacitive heaters: the effect of coupling medium resistivity on power absorption along a mouse leg," Physics in Medicine and Biology, 1993, p. 1-12, vol. 38.
Carrington, "Future of CVI: It's all about plaque: Identification of vulnerable lesions, not 'rusty pipes,' could become cornerstone of preventive cardiology," Diagnostic Imaging, 2001, p. 1-8.
Chen et al., "Percutaneous pulmonary artery denervation completely abolishes experimental pulmonary arterial hypertension in vivo," EuroIntervention, 2013, p. 1-8.
Cimino, "Preventing plaque attack," Mass High Tech, 2001, p. 1-2.
Dahm et al., "Relation of Degree of Laser Debulking of In-Stent Restenosis as a Predictor of Restenosis Rate," The American Journal of Cardiology, 2002, p. 68-70, vol. 90.
De Korte et al., "Characterization of Plaque Components With Intravascular Ultrasound Elastography in Human Femoral and Coronary Arteries In Vitro," Circulation, Aug. 8, 2000, p. 617-623.
Durney et al., "Radiofrequency Radiation Dosimetry Handbook," Oct. 1986, p. 1-2, Fourth Edition.
Durney et al., "Radiofrequency Radiation Dosimetry Handbook: Contents," Oct. 1986, p. 1-5, Fourth Edition.
Fournier-Desseux et al., "Assessment of 1-lead and 2-lead electrode patterns in electrical impedance endotomography," Physiological Measurement, 2005, p. 337-349. Vo. 26, Institute of Physics Publishing.
Fram et al., "Feasibility of Radiofrequency Powered, Thermal Balloon Ablation of Atrioventricular Bypass Tracts Via the Coronary Sinus: In Vivo Canine Studies," PACE, Aug. 1995, p. 1518-1530, vol. 18.
Fram et al., "Low Pressure Radiofrequency Balloon Angioplasty: Evaluation in Porcine Peripheral Arteries," JACC, 1993, p. 1512-1521, vol. 21, No. 6, American College of Cardiology.
Fujimori et al., "Significant Prevention of In-Stent Restenosis by Evans Blue in Patients with Acute Myocardial Infarction," American Heart Association, 2002.
Fujita et al., "Sarpogrelate, An Antagonist of 5-HT(2A) Receptor, Treatment Reduces Restenosis After Coronary Stenting," American Heart Association, 2002.
Gabriel, "Appendix A: Experimental Data," 1999, p. 1-21.
Gregory et al., "Liquid Core Light Guide for Laser Angioplasty," The Journal of Quantum Electronics, Dec. 1990, p. 2289-2296, vol. 26, No. 12.
Kaplan et al., "Healing after Arterial Dilatation with Radiofrequency Thermal and Nonthermal Balloon Angioplasty Sytems," Journal of Investigative Surgery, 1993, p. 33-52, vol. 6.
Kolata, "New Studies Question Value of Opening Arteries," The New York Times, Mar. 21, 2004, p. 1-5.
Konings et al., "Development of an Intravascular Impedance Catheter for Detection of Fatty Lesions in Arteries," IEEE Transactions on Medical Imaging, Aug. 1997, p. 439-446, vol. 16, No. 4.
Kurtz et al., "Lamellar Refractive Surgery with Scanned Intrastromal Picosecond and Femtosecond Laser Pulses in Animal Eyes," Journal of Refractive Surgery, Sep./Oct. 1998, p. 541-548.
Lee et al., "Thermal Compression and Molding of Atherosclerotic Vascular Tissue With Use of Radiofrequency Energy: Implications for Radiofrequency Balloon Angioplasty," JACC, 1989, p. 1167-1175, vol. 13, No. 5, American College of Cardiology.
Lima et al., "Efficacy and Safety of Oral Sirolimus to Treat and Prevent In-Stent Restenosis: A Pilot Study Results," American Heart Association, 2002, p. 2929.
Lima et al., "Systemic Immunosuppression Inhibits In-Stent Coronary Intimal Proliferation in Renal Transplant Patients," American Heart Association, 2002, p. 2928.
Morice et al., "A Randomized Comparison of a Sirolimus-Eluting Stent With a Standard Stent for Coronary Revascularization," The New England Journal of Medicine, Jun. 6, 2012, p. 1773-1780, vol. 346, No. 23.
Muller-Leisse et al., "Effectiveness and Safety of Ultrasonic Atherosclerotic Plaque Ablation: In Vitro Investigation," CardioVascular and Interventional Radiology, 1993, p. 303-307, vol. 16.
Nair et al., "Regularized Autoregressive Analysis of Intravascular Ultrasound Backscatter: Improvement in Spatial Accuracy of Tissue Maps," IEEE Transactions on Ultrasonics, Apr. 2004, p. 420-431, vol. 51, No. 4.
Resar et al., "Endoluminal Sealing of Vascular Wall Disruptions With Radiofrequency-Heated Balloon Angioplasty," Catheterization and Cardiovascular Diagnosis, 1993, p. 161-167, vol. 29.
Romer et al., "Histopathology of Human Coronary Atherosclerosis by Quantifying Its Chemical Composition With Raman Spectroscopy," Circulation, 1998, p. 878-885, vol. 97.
Schauerte et al., "Catheter Ablation of Cardiac Autonomic Nerves for Prevention of Vagal Atrial Fibrillation," Circulation, 2000, p. 2774-2780, vol. 102.
Scheller et al., "Intracoronary Paclitaxel Added to Contrast Media Inhibits In-Stent Restenosis of Porcine Coronary Arteries," American Heart Association, 2002, p. 2227.
Scheller et al., "Potential solutions to the current problem: coated balloon," EuroIntervention, 2008, p. C63-C66, vol. 4 (Supplement C).
Shaffer, "Scientific basis of laser energy," Clinics in Sports Medicine, 2002, p. 585-598, vol. 21.

(56) **References Cited**

OTHER PUBLICATIONS

Shmatukha et al., "MRI temperature mapping during thermal balloon angioplasty," Physics in Medicine and Biology, 2006, p. N163-N171, vol. 51.
Slager et al., "Vaporization of Atherosclerotic Plaques by Spark Erosion," J Am Coll Cardiol, 1985, p. 21-25.
Stiles et al., "Simulated Characterization of Atherosclerotic Lesions in the Coronary Arteries by Measurement of Bioimpedance," IEEE Transactions on Biomedical Engineering, Jul. 2003, p. 916-921, vol. 50, No. 7.
Suselbeck et al., "In vivo intravascular electric impedance spectroscopy using a new catheter with integrated microelectrodes," Basic Res Cardiol, 2005, p. 28-34, vol. 100.
Suselbeck et al., "Intravascular electric impedance spectroscopy of atherosclerotic lesions using a new impedance catheter system," Basic Res Cardiol, 2005, p. 446-452, vol. 100.
Tepe et al., "Local Delivery of Paclitaxel to Inhibit Restenosis during Angioplasty of the Leg," The New England Journal of Medicine, 2008, p. 689-699, vol. 358.
Gabriel, "Appendix C: Modeling the frequency dependence of the dielectric properties to a 4 dispersions spectrum," p. 1-49, Nov. 6, 1997.
Han et al., "Third-Generation Cryosurgery for Primary and Recurrent Prostate Caner," BJU International, vol. 93, pp. 14-18, 2004.
Omura et al., "A Mild Acute Compression Induces Neurapraxia in Rat Sciatic Nerve," The International Journal of Neuroscience, vol. 114 (12), pp. 1561-1572, Dec. 2004.
Popma et al., "Percutaneous Coronary and Valvular Intervention," Braunwald's Heart Disease: A Textbook of Cardiovascular Medicine, 7th edition, p. 1364-1405, 2005.
"Optical Coherence Tomography: Advantages of OCT," LightLab Imaging Technology, printed Sep. 3, 2003.
"Optical Coherence Tomography: Image Gallery Cardiovascular Procedures," LightLab Imaging Technology, printed Sep. 3, 2003.
"Optical Coherence Tomography: What is OCT?," LightLab Imaging Technology, printed Sep. 3, 2003.
"Optical Coherence Tomography: Why Use OCT?," LightLab Imaging Technology, printed Sep. 3, 2003.

* cited by examiner

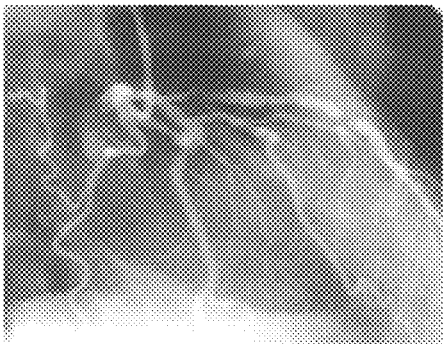

FIG. 1a

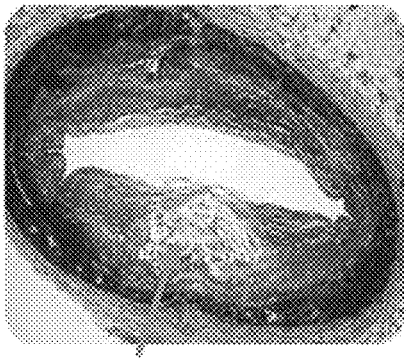

FIG. 1b

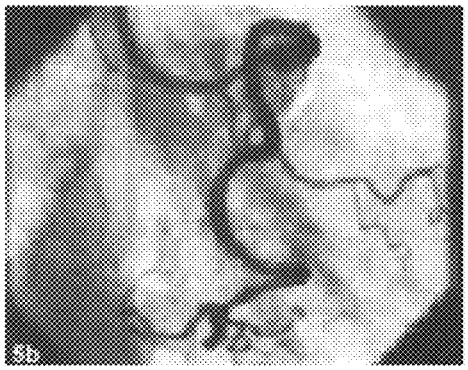

FIG. 1c

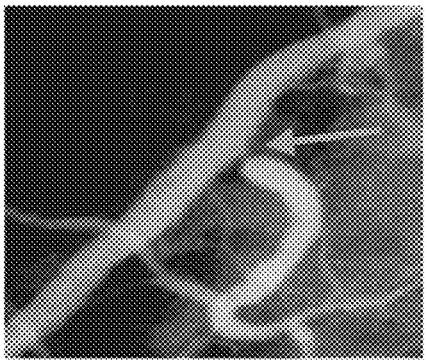

FIG. 1d

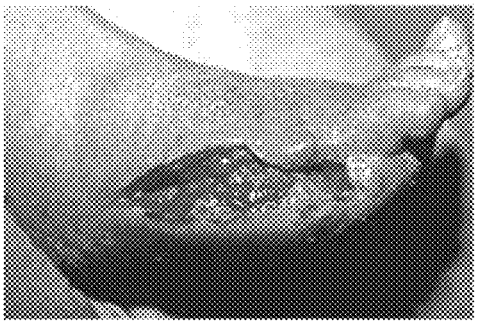

FIG. 1e

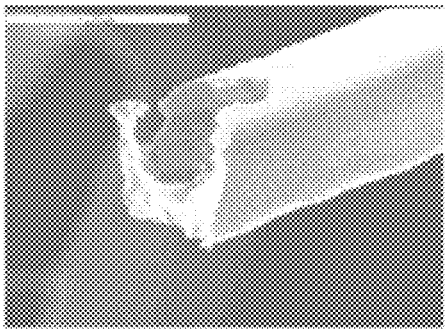

FIG. 1f

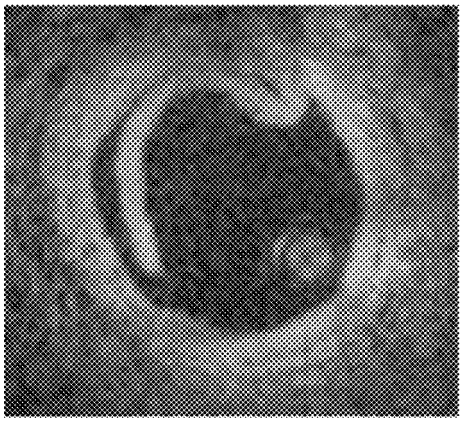

FIG. 1G

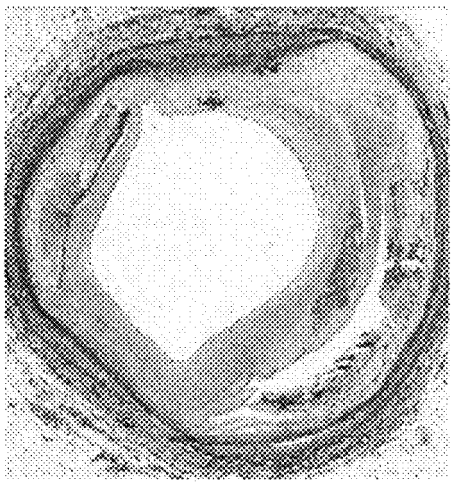

FIG. 1H

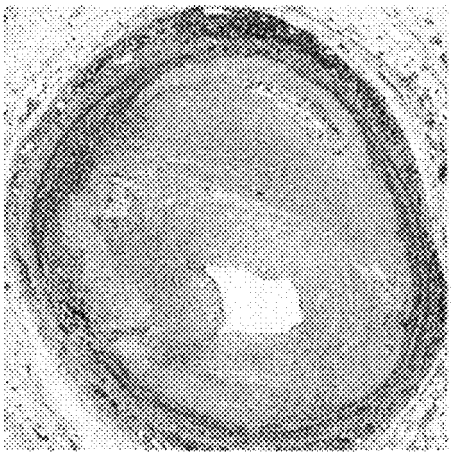

FIG. 1I

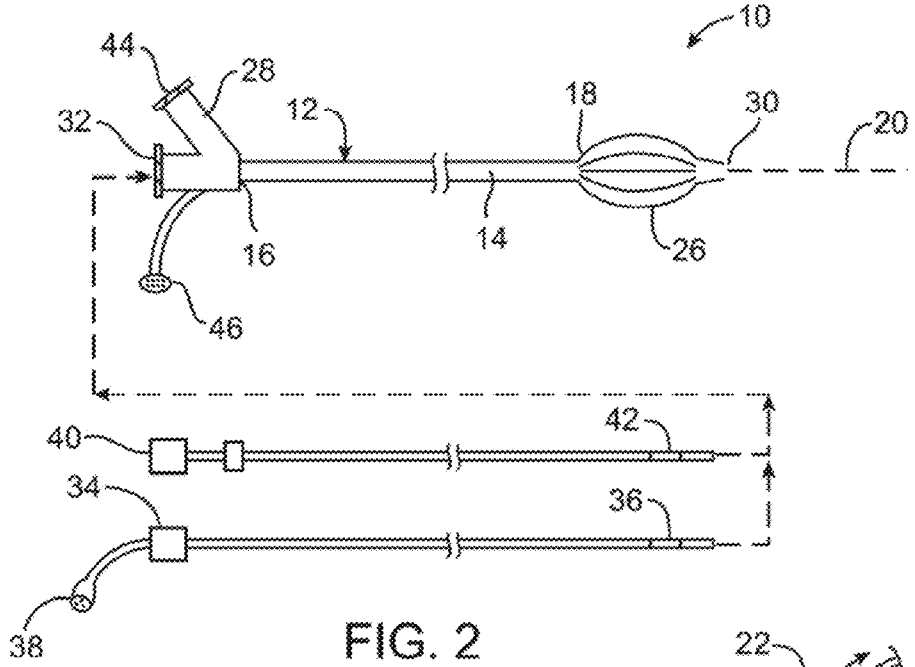
10
44
28
12
18
30
20
32
16
14
26
46
42
40
34
36
38

FIG. 2

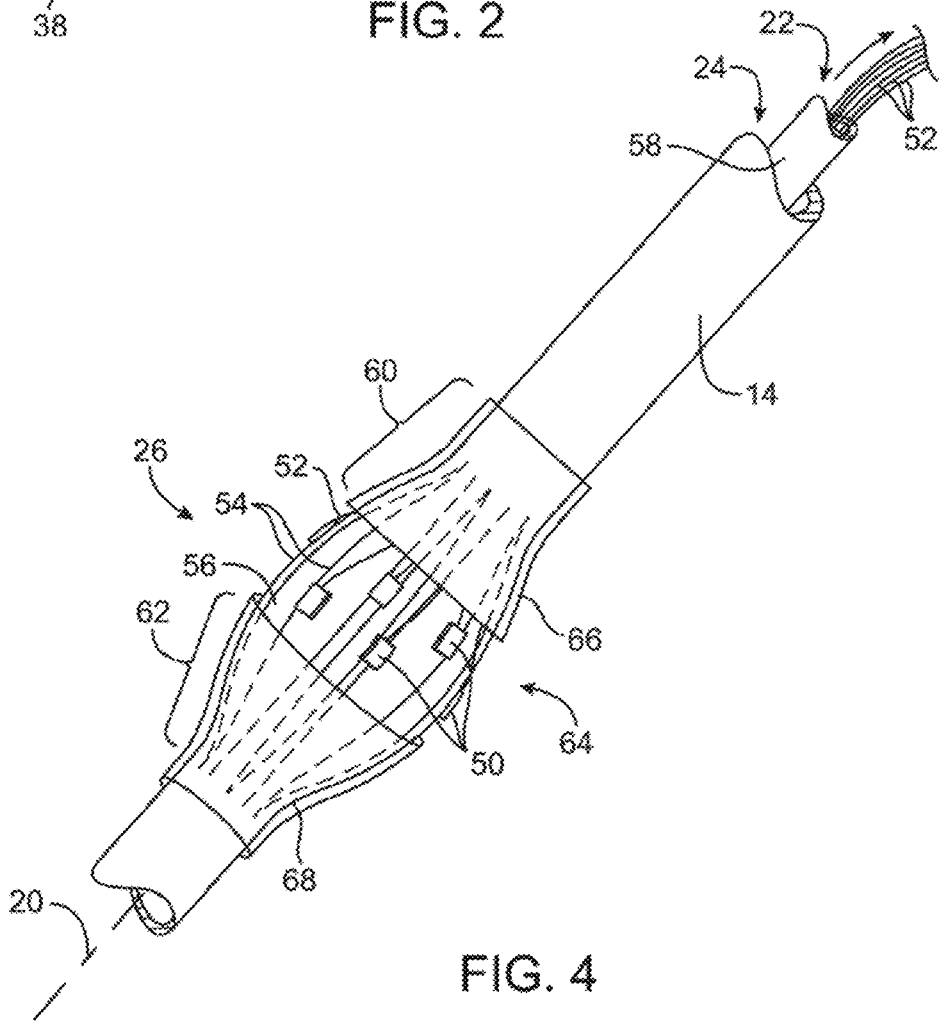
22
24
58
52
60
14
26
52
54
56
62
66
64
50
68
20

FIG. 4

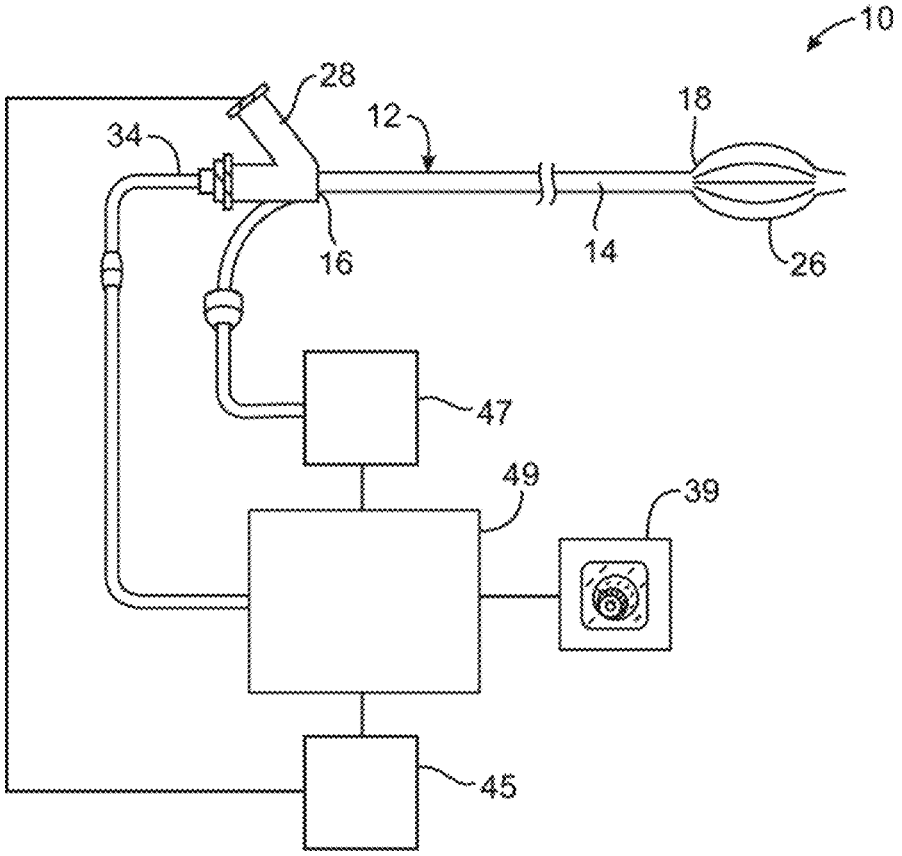

FIG. 3

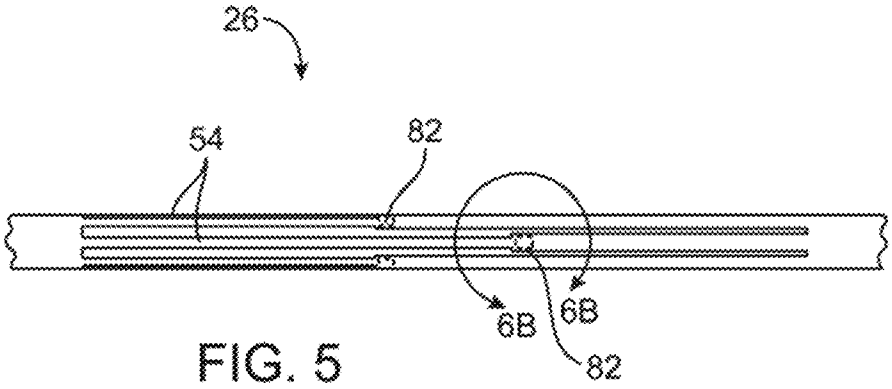

FIG. 5

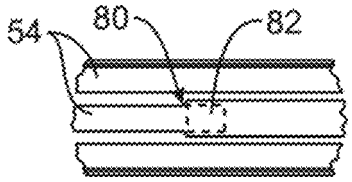

FIG. 6

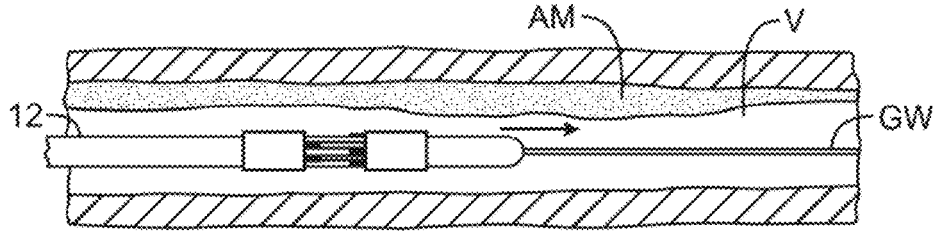

FIG. 7A

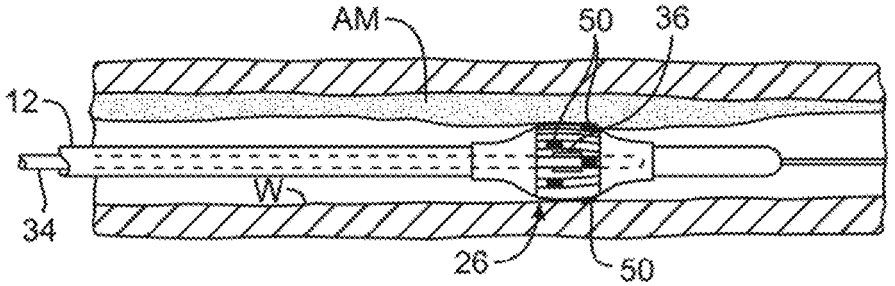

FIG. 7B

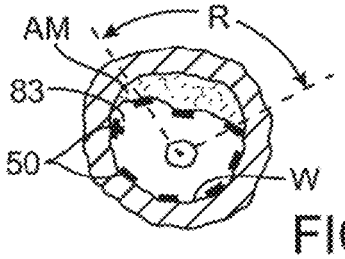

FIG. 7C

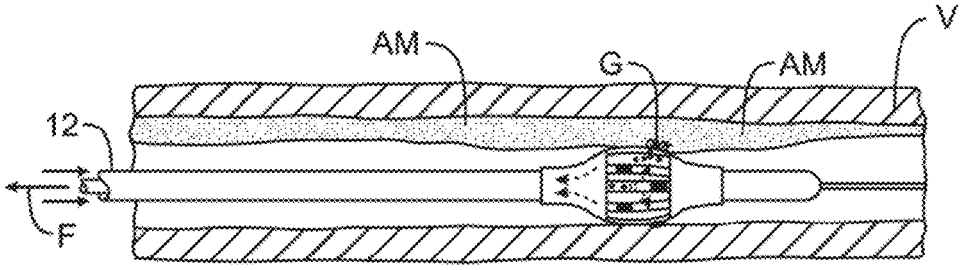

FIG. 7D

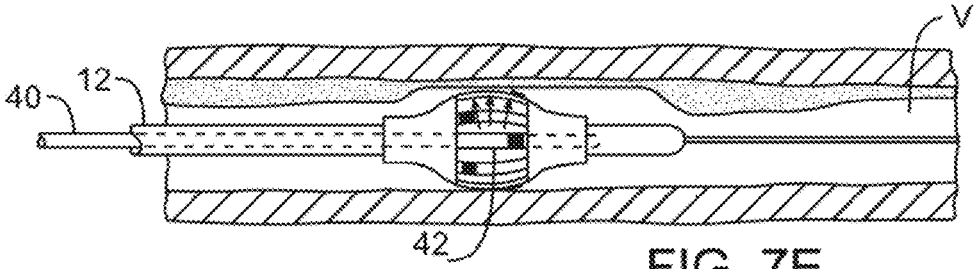

FIG. 7E

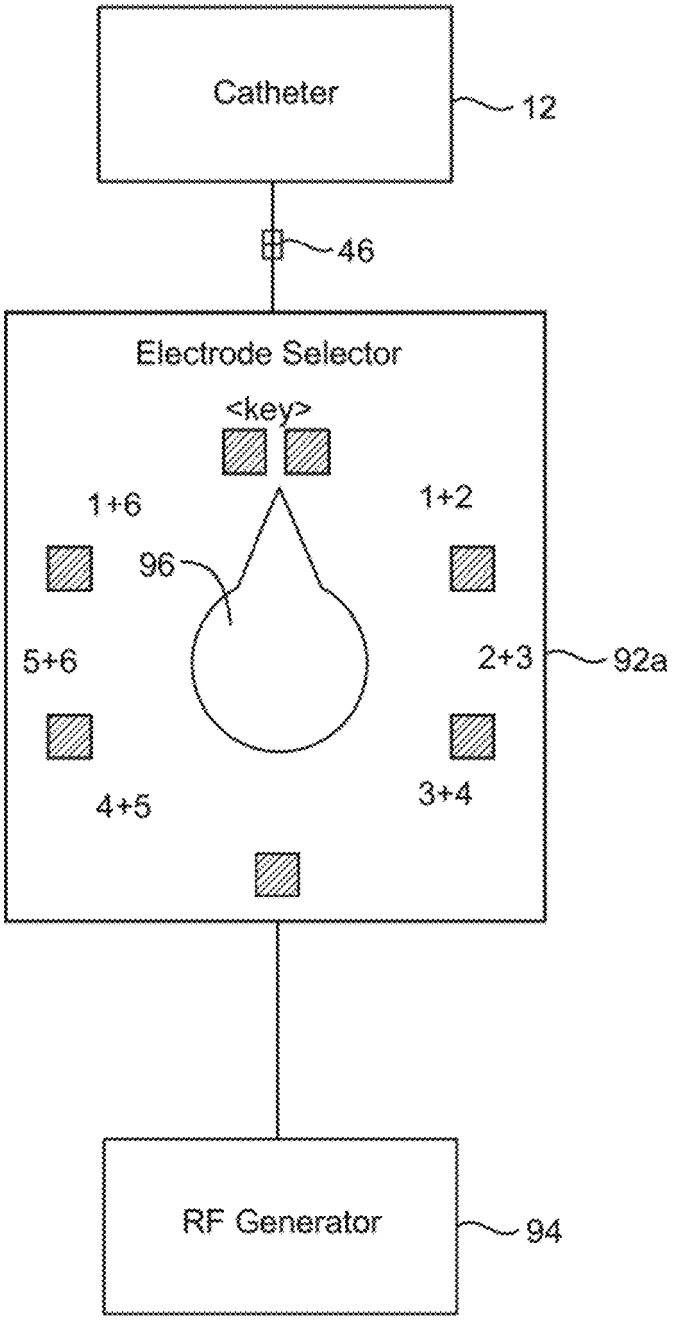
Catheter
12
46
Electrode Selector
<key>
1+6
1+2
96
5+6
2+3
92a
4+5
3+4
RF Generator
94

FIG. 8

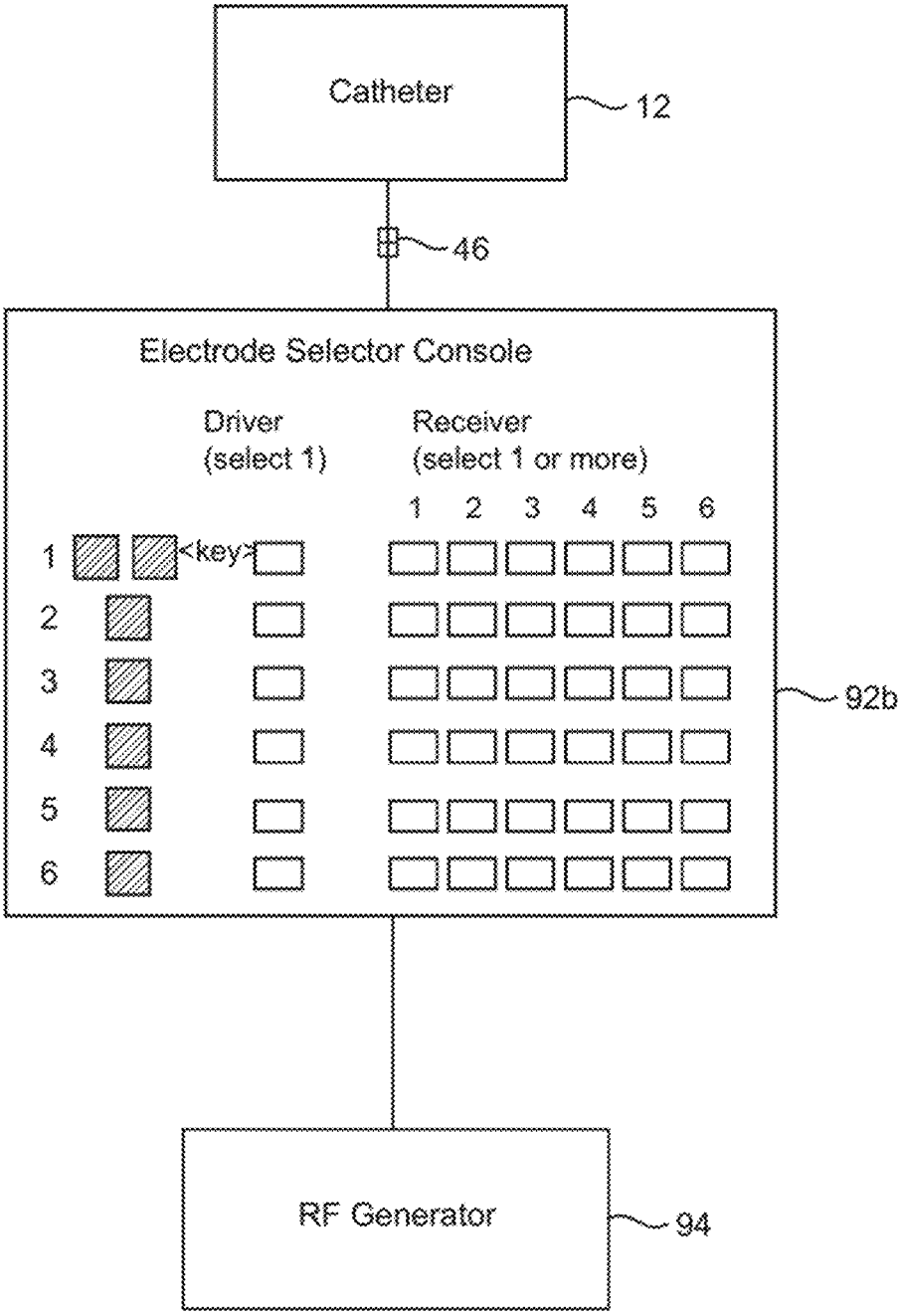
Catheter
12
46
Electrode Selector Console
Driver
(select 1)
Receiver
(select 1 or more)
1 2 3 4 5 6
1
2
3
4
5
6
<key>
92b
RF Generator
94

FIG. 9

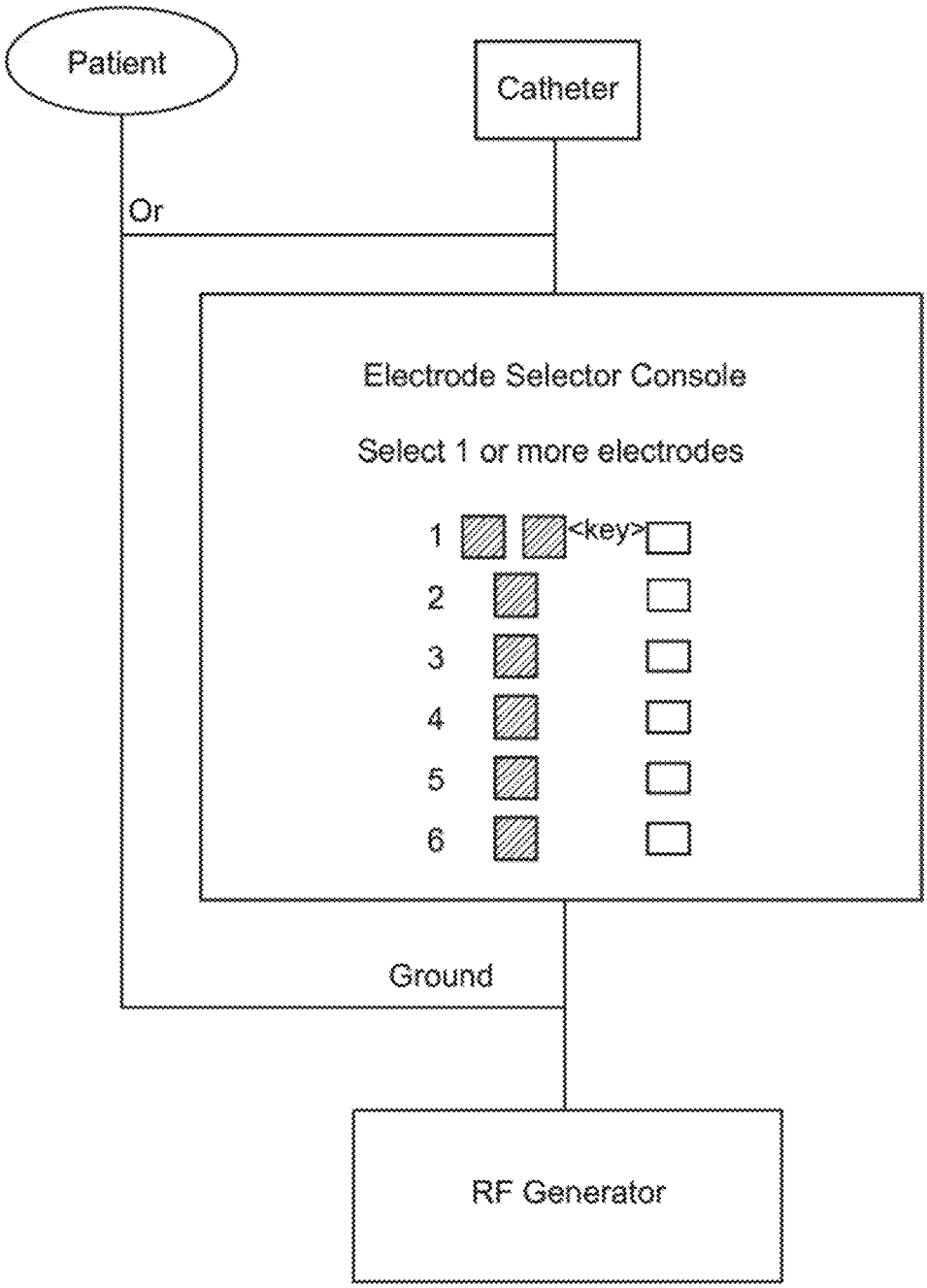
Patient
Catheter
Or
Electrode Selector Console
Select 1 or more electrodes
1
<key>
2
3
4
5
6
Ground
RF Generator

FIG. 10

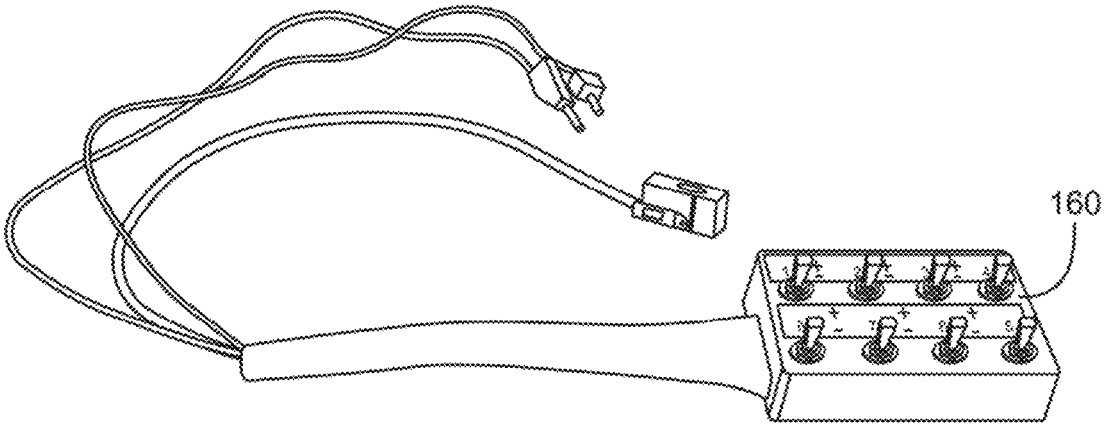

FIG. 11

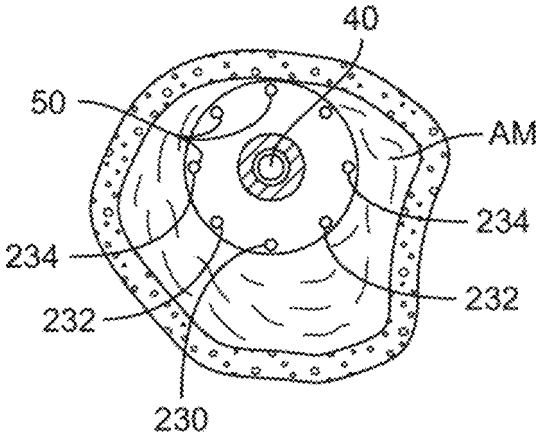

FIG. 13

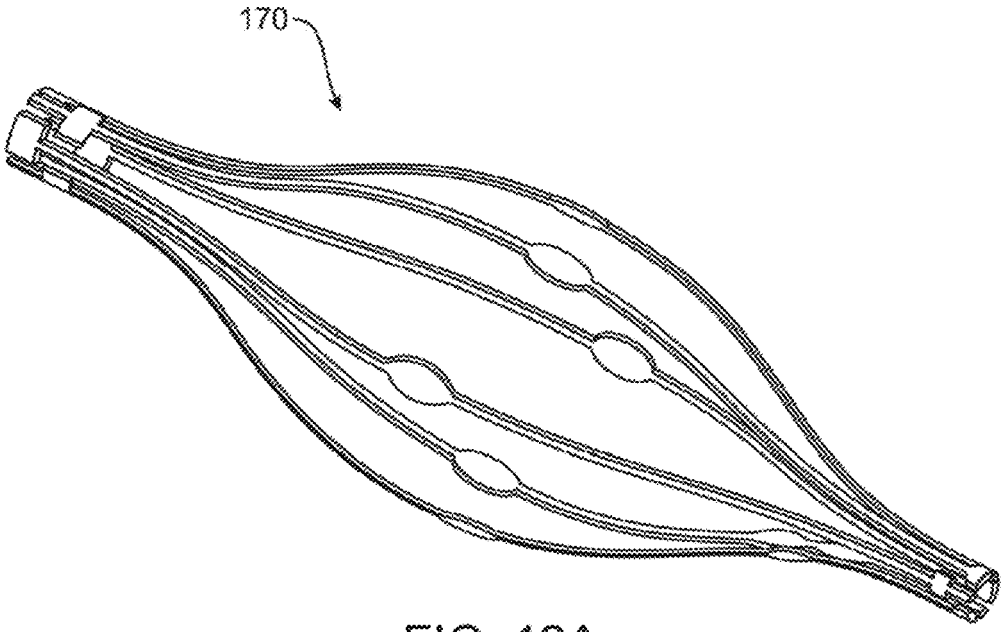

FIG. 12A

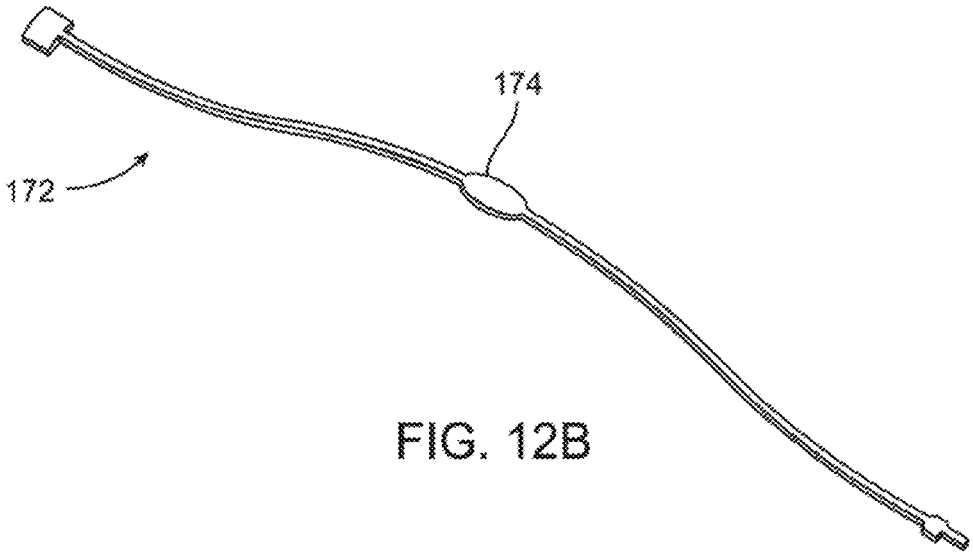

FIG. 12B

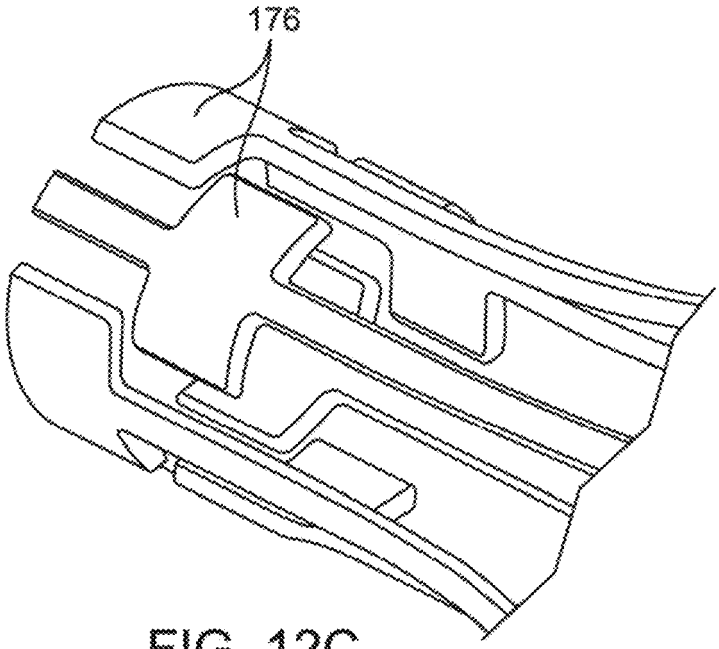

FIG. 12C

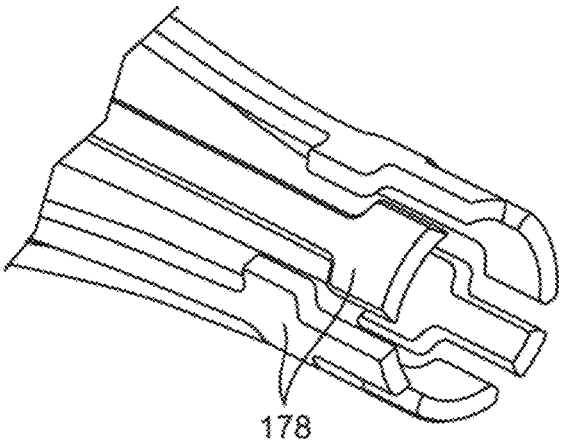

FIG. 12D

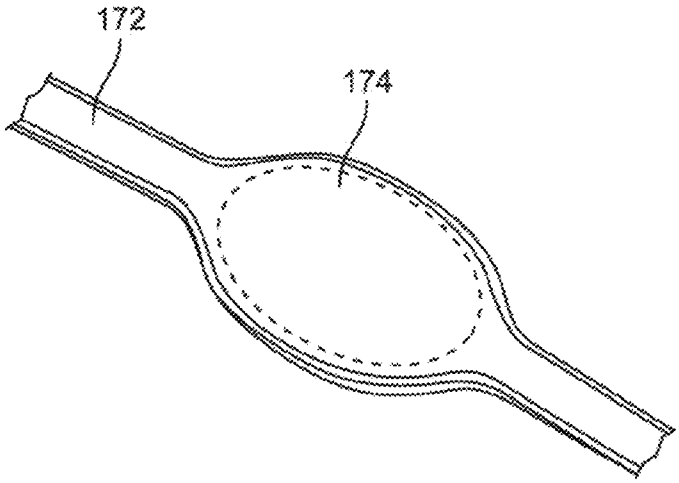

FIG. 12E

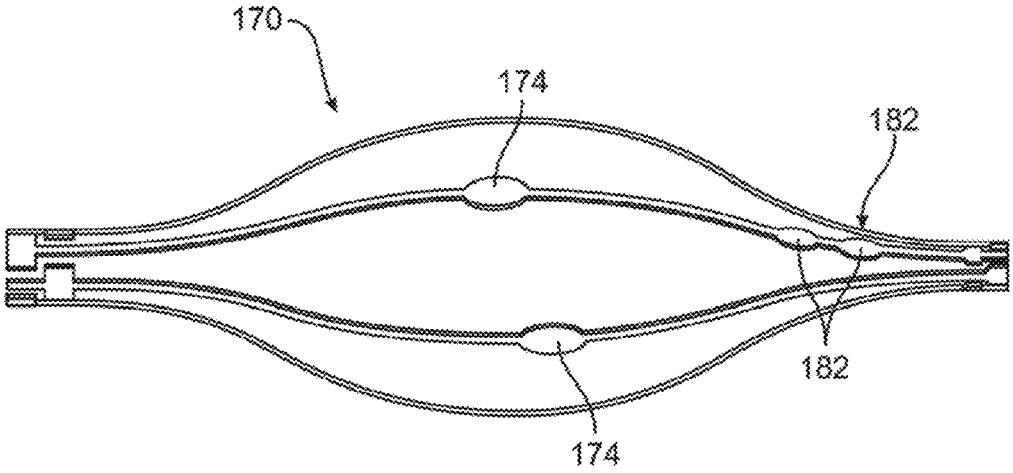

FIG. 12F

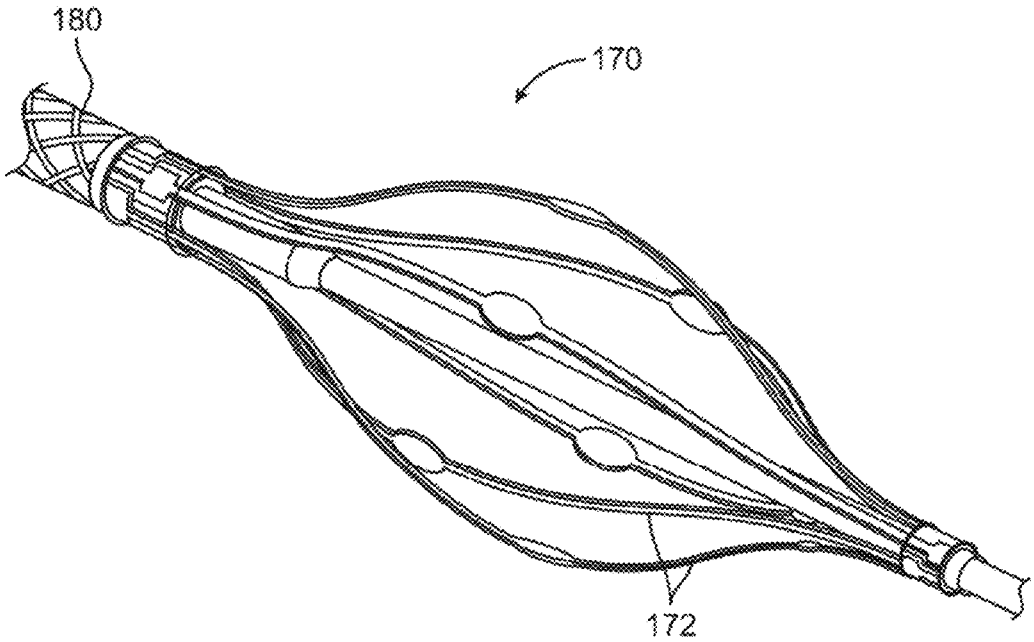

FIG. 12G

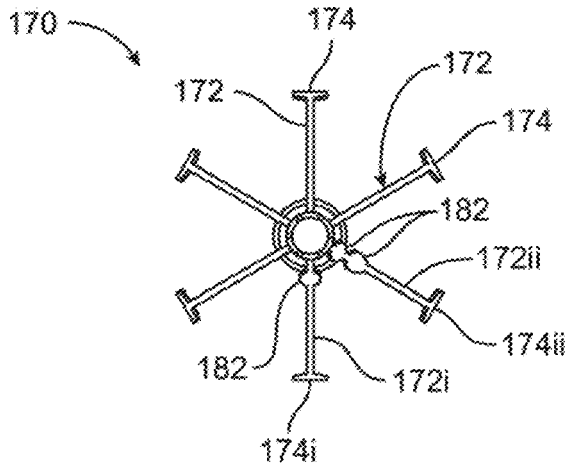

FIG. 12H

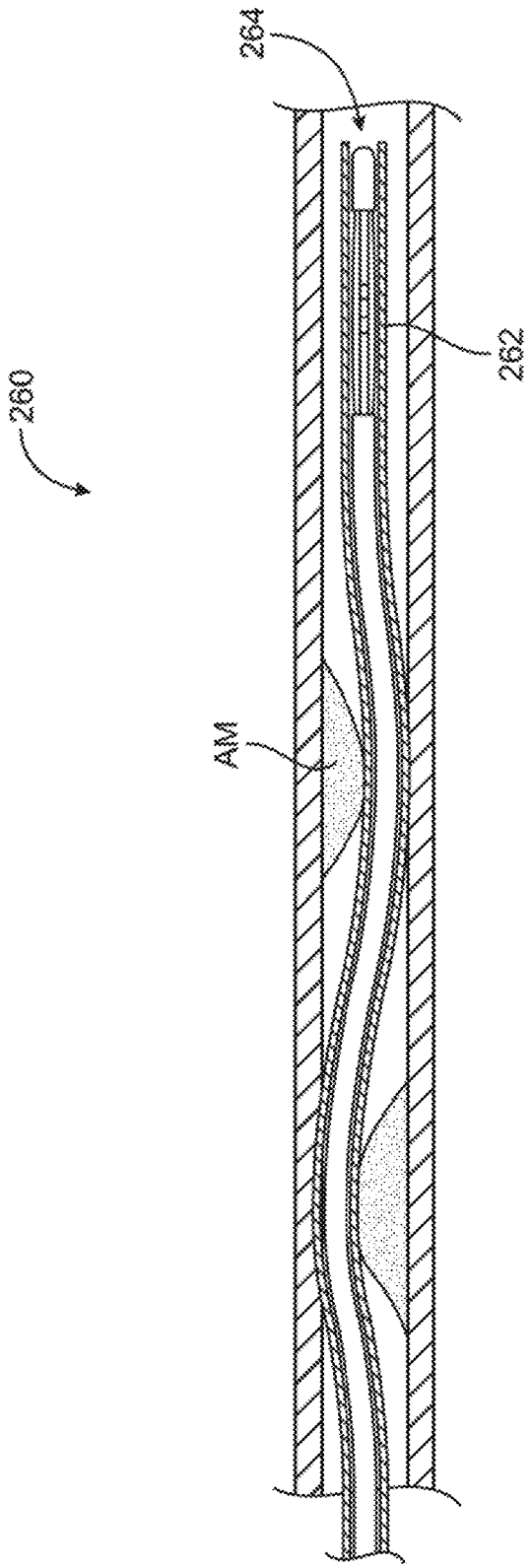

FIG. 14A

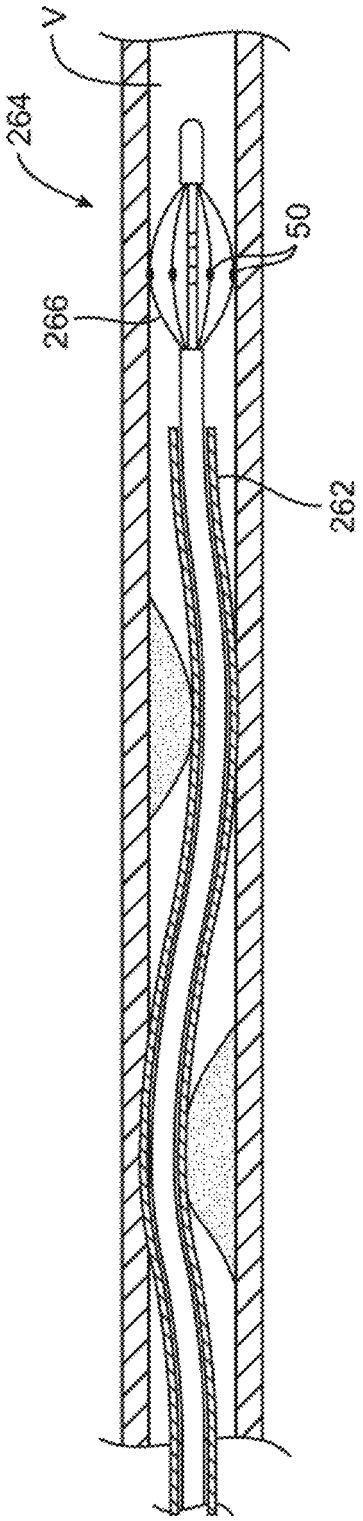

FIG. 14B

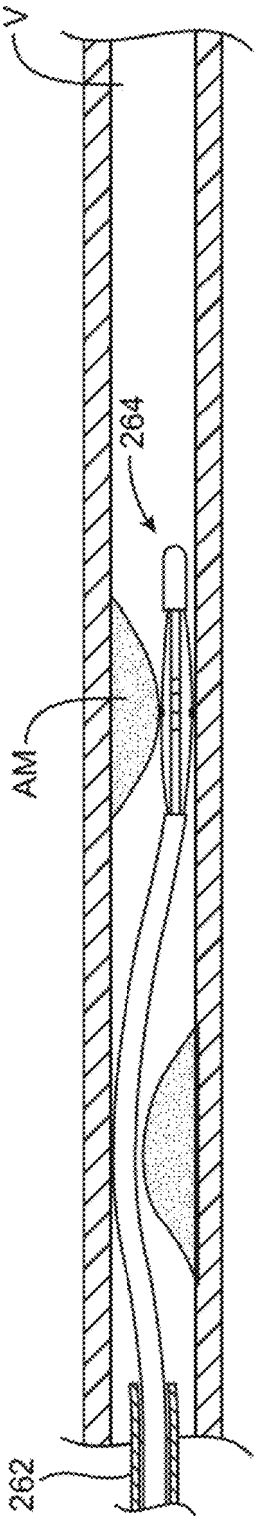

FIG. 14C

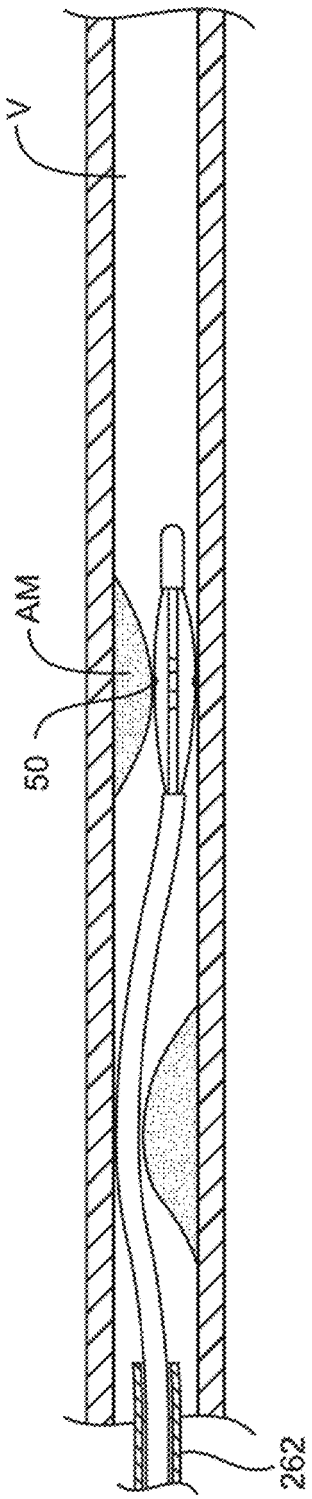

FIG. 14D

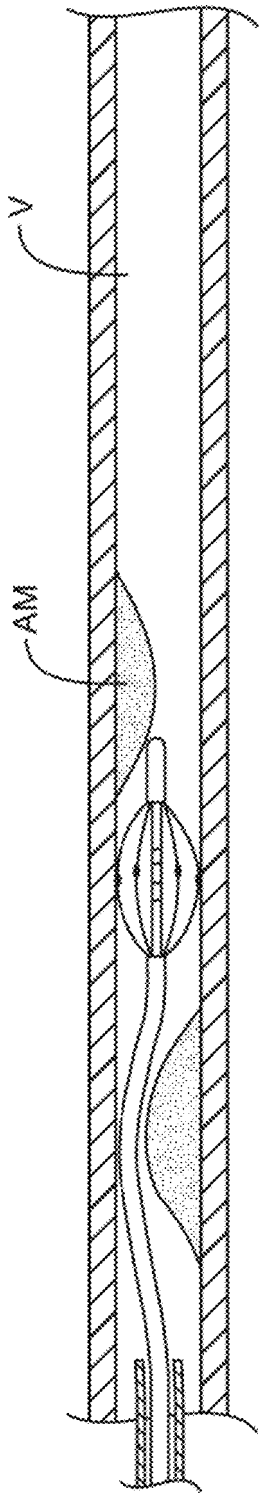

FIG. 14E

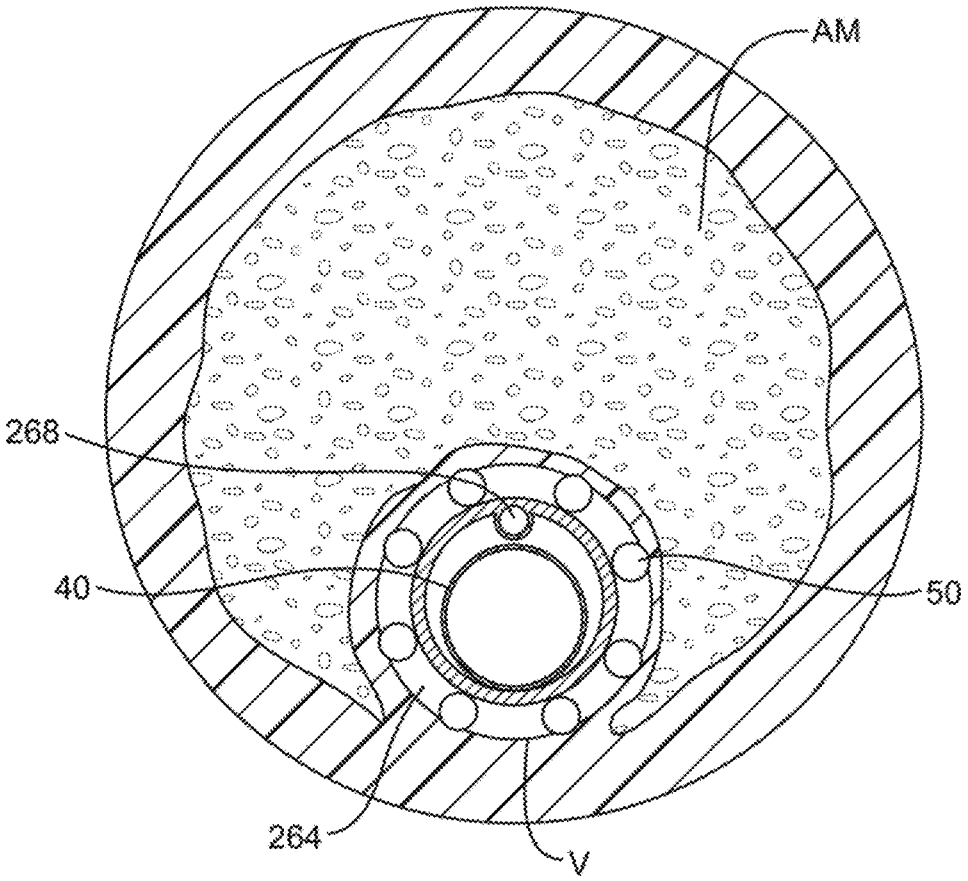

FIG. 14F

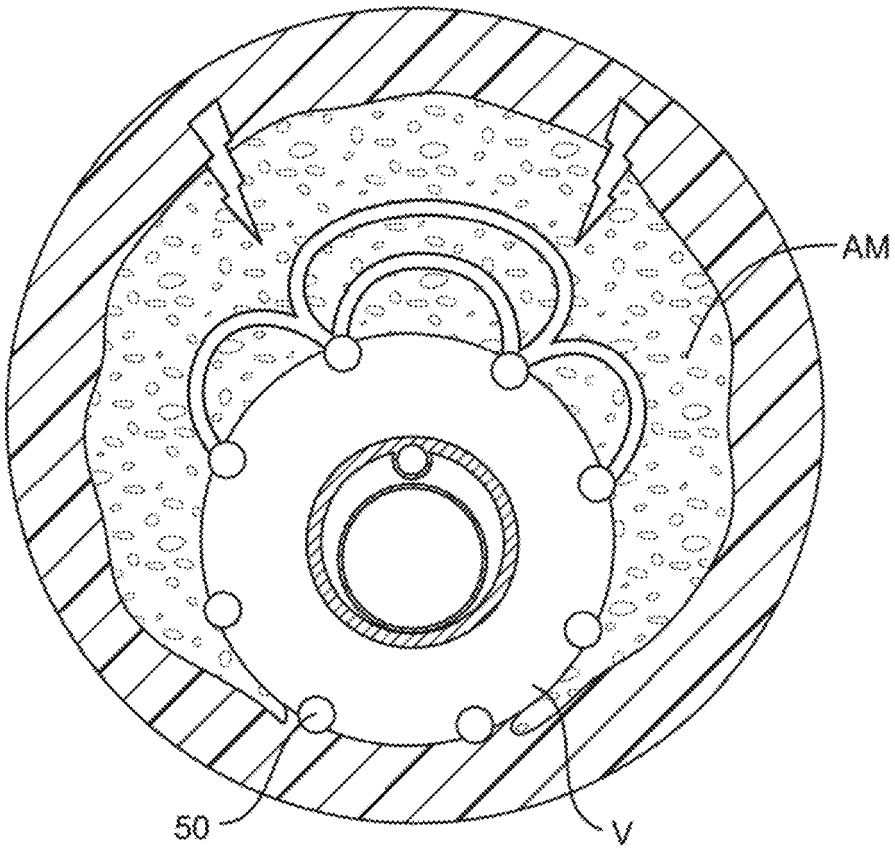

FIG. 14G

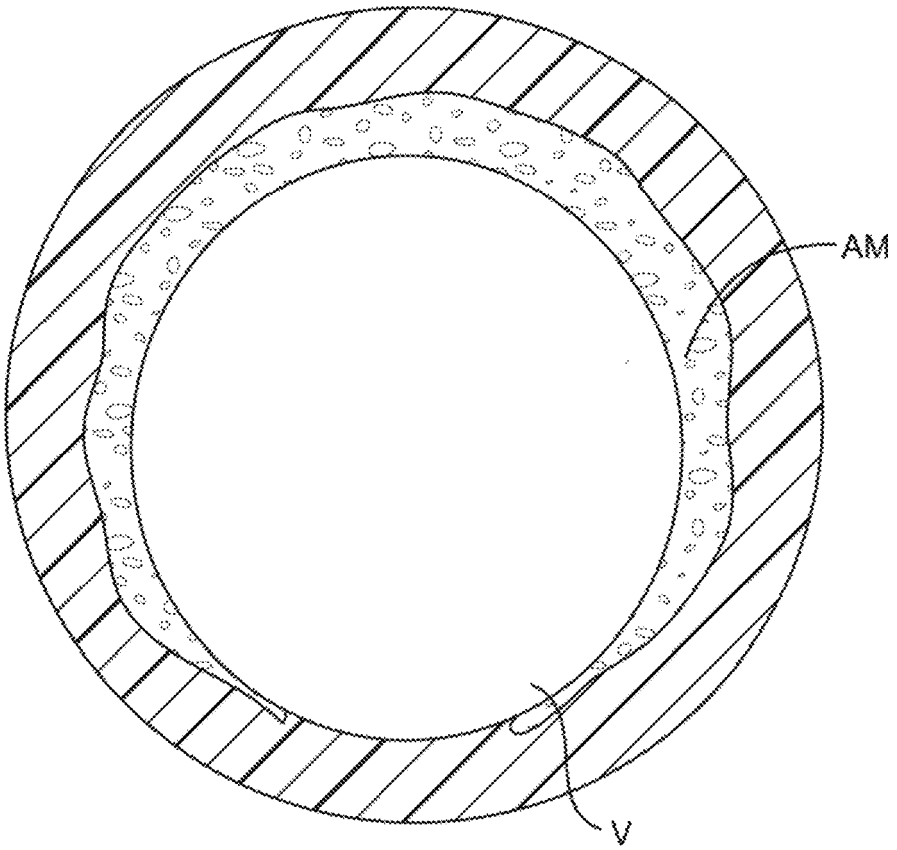

FIG. 14H

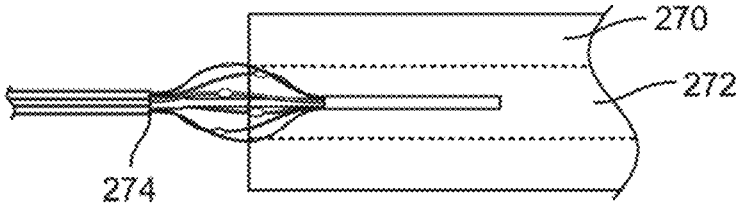

FIG. 15A

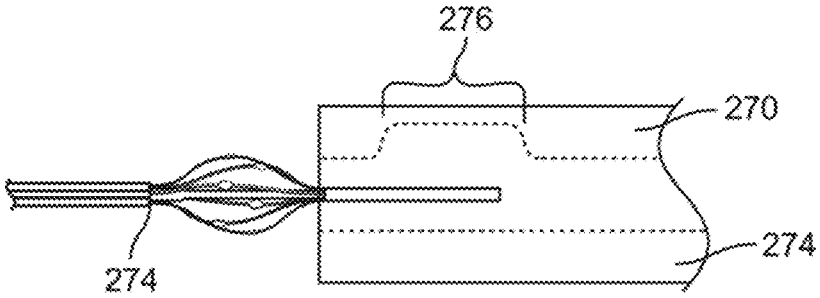

FIG. 15B

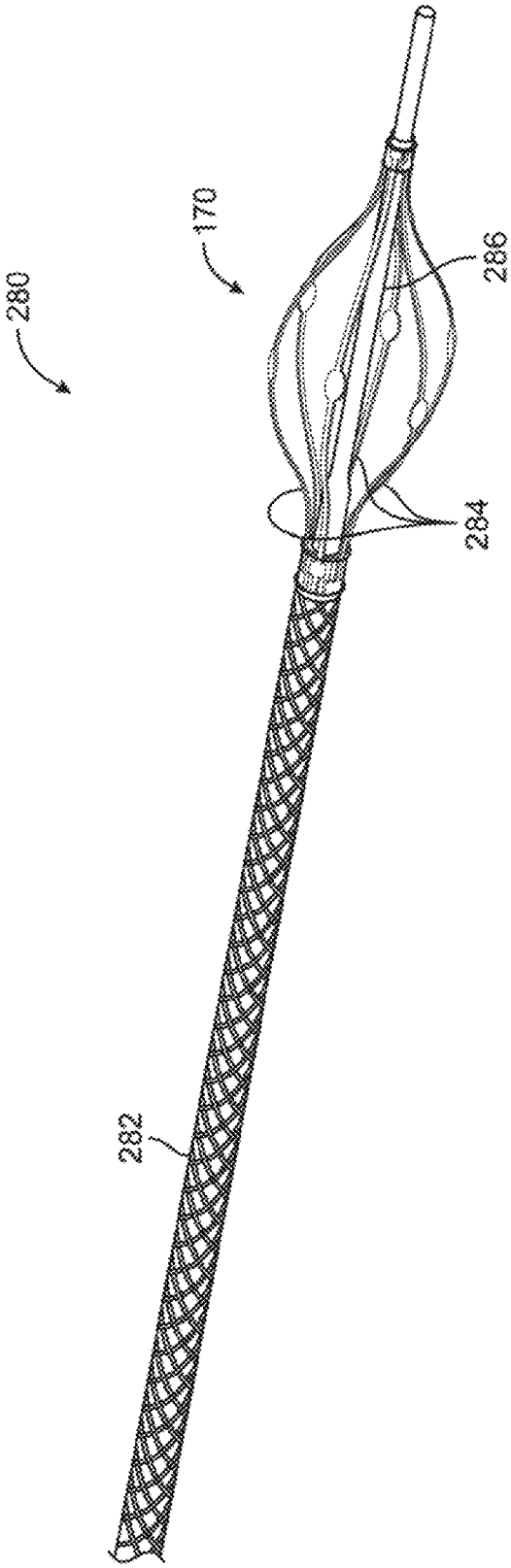

FIG. 16

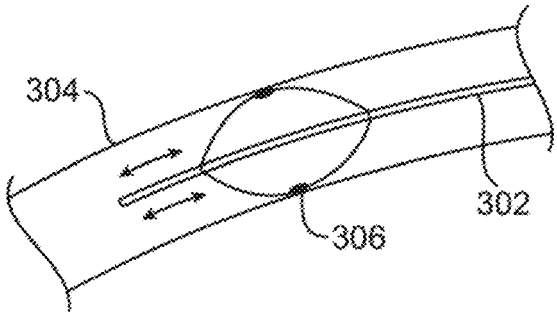

FIG. 17A

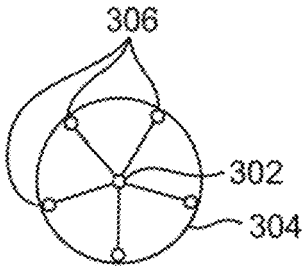

FIG. 17B

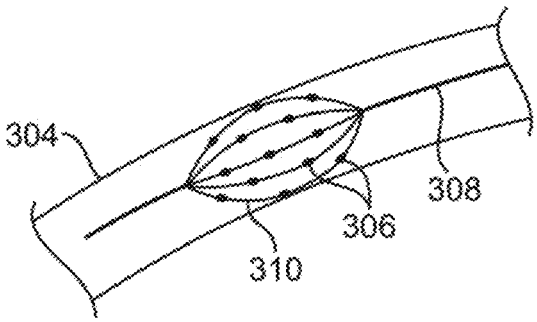

FIG. 17C

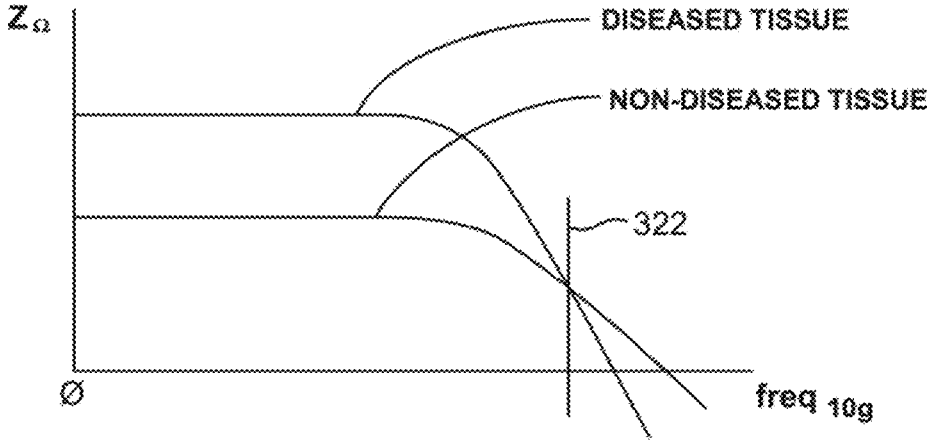

INPEDANCE OF DISEASED AND NON-DISEASED TISSUE

FIG. 18

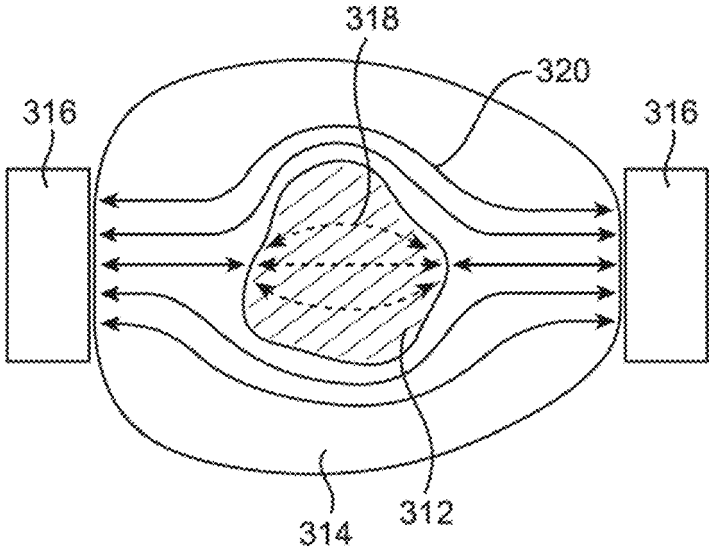

FIG. 19

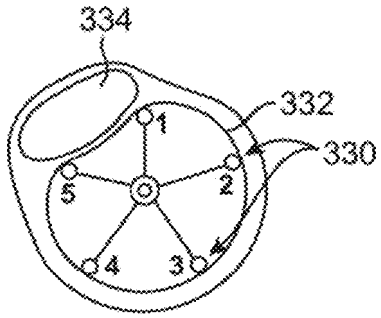
334
332
330
1
2
3
4
5

FIG. 20

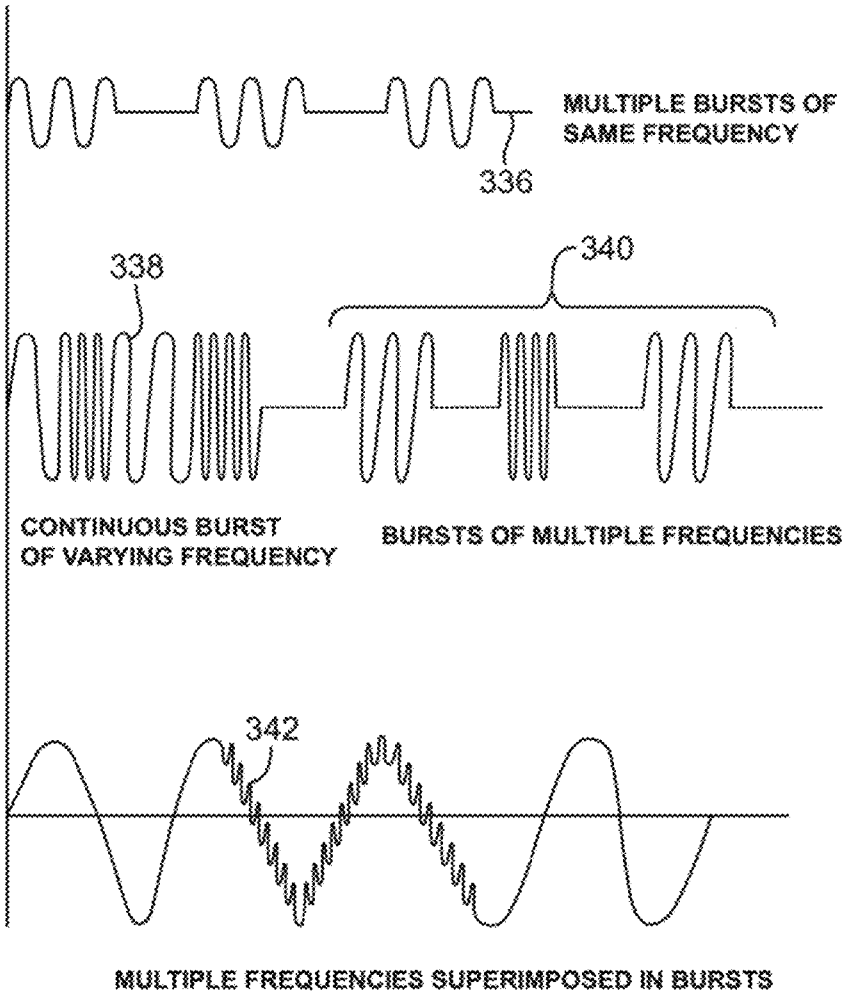
MULTIPLE BURSTS OF SAME FREQUENCY
336
338
340
CONTINUOUS BURST OF VARYING FREQUENCY
BURSTS OF MULTIPLE FREQUENCIES
342
MULTIPLE FREQUENCIES SUPERIMPOSED IN BURSTS

FIG. 21

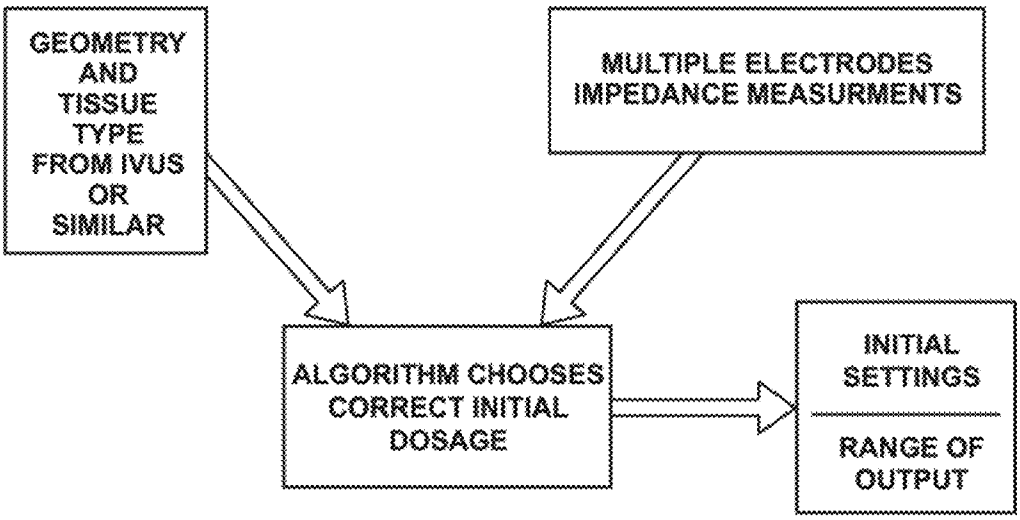
GEOMETRY AND TISSUE TYPE FROM IVUS OR SIMILAR
MULTIPLE ELECTRODES IMPEDANCE MEASURMENTS
ALGORITHM CHOOSES CORRECT INITIAL DOSAGE
INITIAL SETTINGS
RANGE OF OUTPUT

FIG. 22

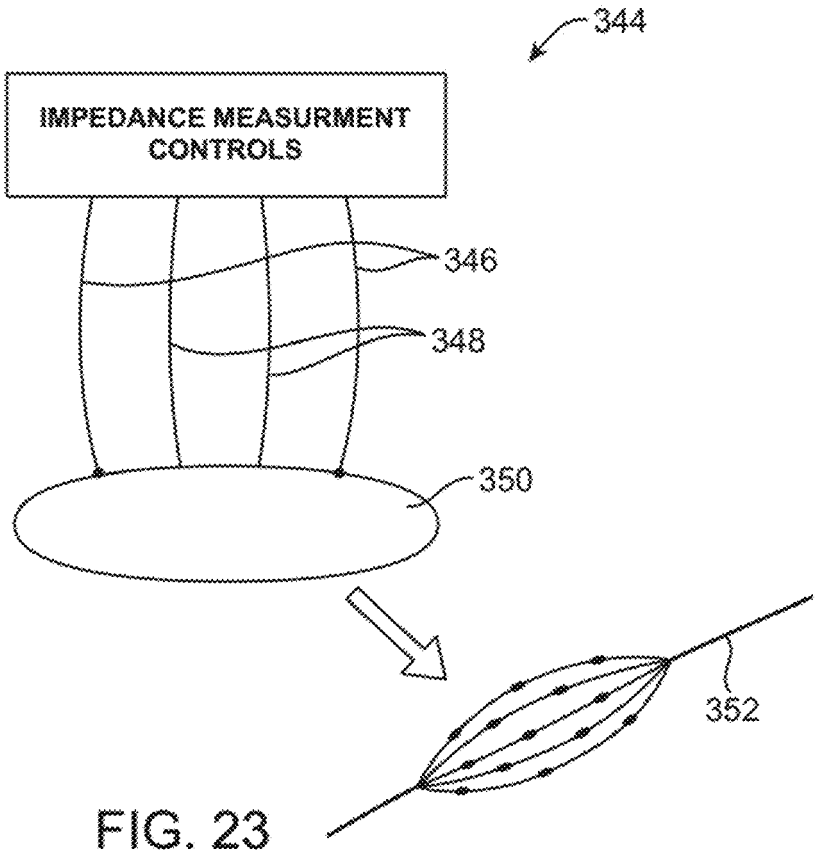
344
IMPEDANCE MEASURMENT CONTROLS
346
348
350
352

FIG. 23

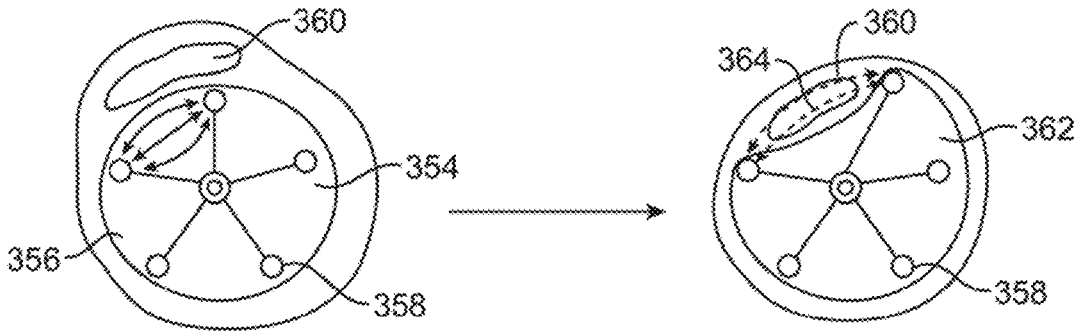
360
354
356
358
360
364
362
358

FIG. 24

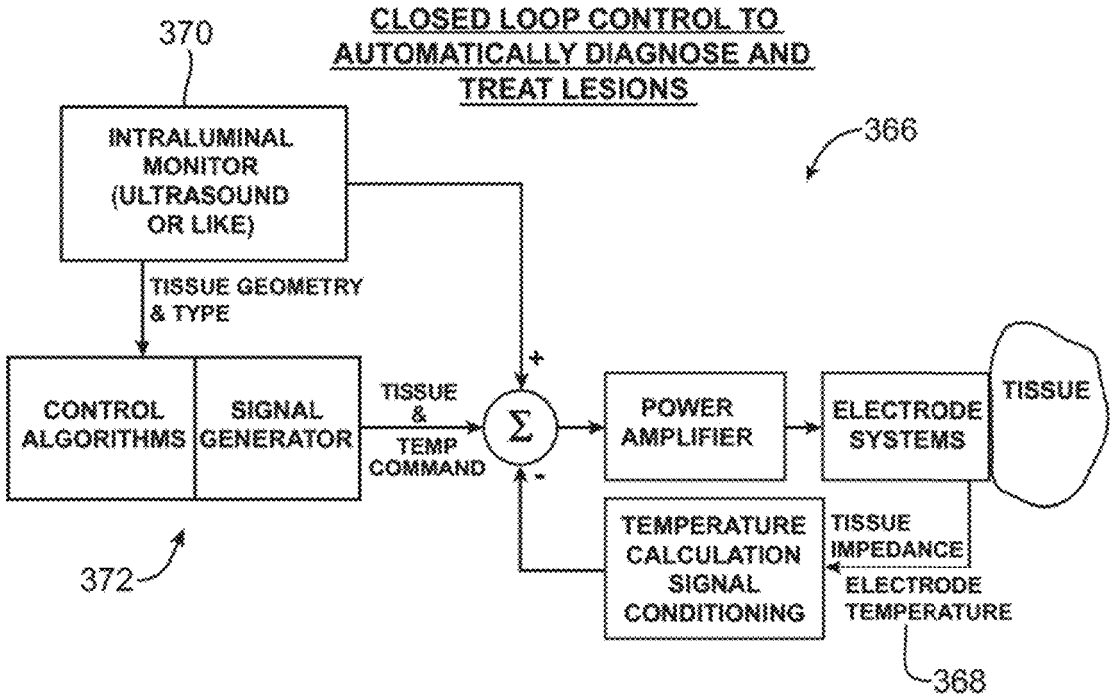
CLOSED LOOP CONTROL TO AUTOMATICALLY DIAGNOSE AND TREAT LESIONS
370
INTRALUMINAL MONITOR (ULTRASOUND OR LIKE)
366
TISSUE GEOMETRY & TYPE
CONTROL ALGORITHMS
SIGNAL GENERATOR
TISSUE & TEMP COMMAND
+
Σ
-
POWER AMPLIFIER
ELECTRODE SYSTEMS
TISSUE
TEMPERATURE CALCULATION SIGNAL CONDITIONING
TISSUE IMPEDANCE
ELECTRODE TEMPERATURE
372
368

FIG. 25

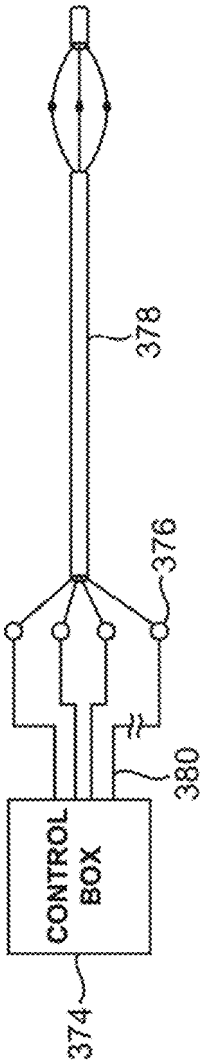

FIG. 26A

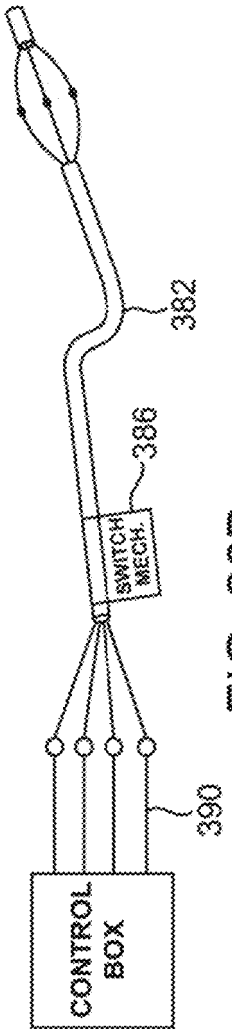

FIG. 26B

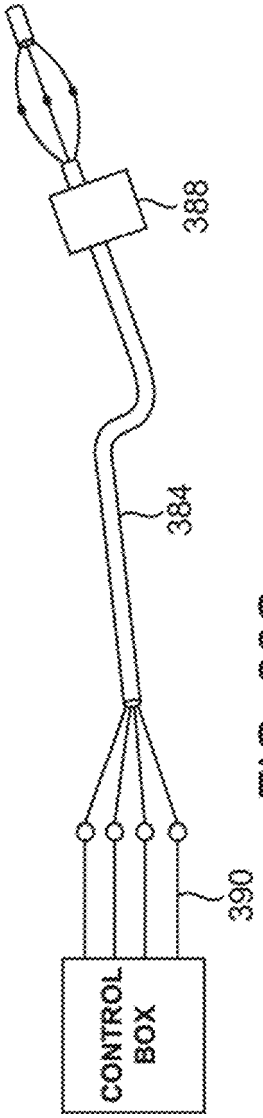

FIG. 26C

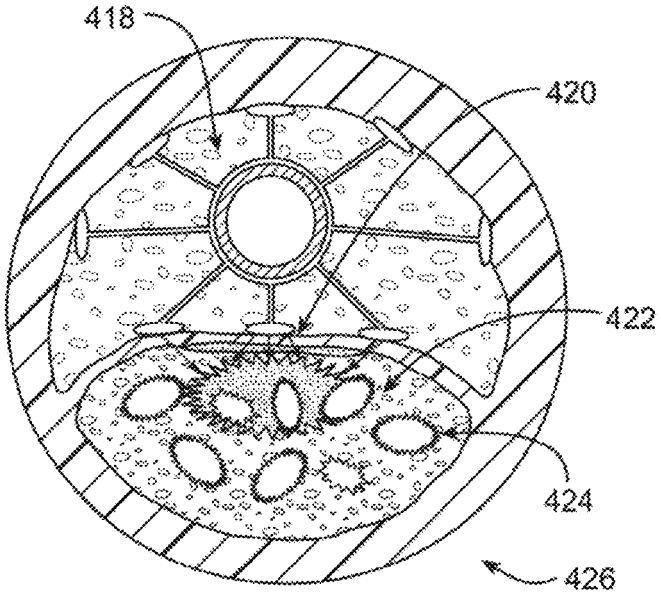

FIG. 27

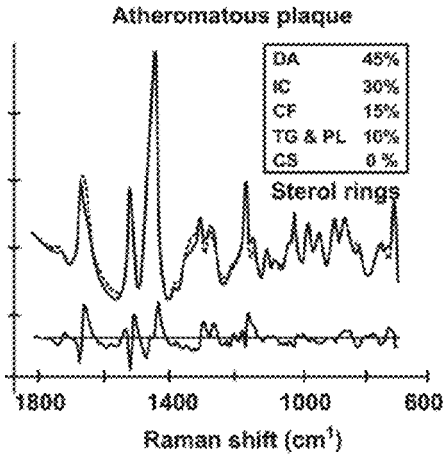

FIG. 27A

FIG. 27B

FIG. 27C

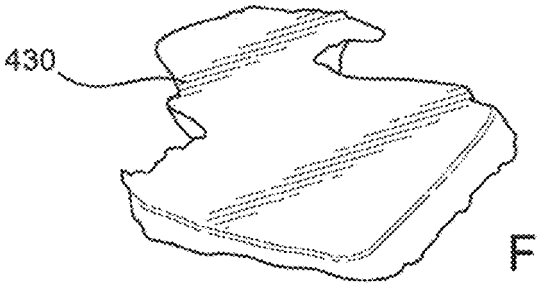

FIG. 28A

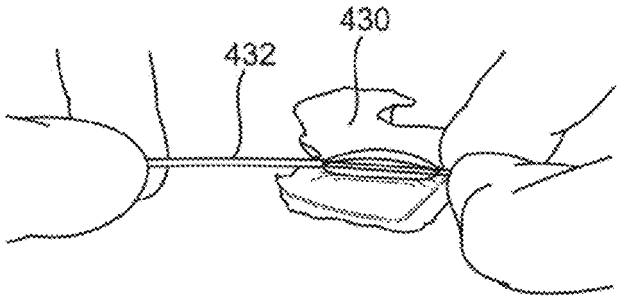

FIG. 28B

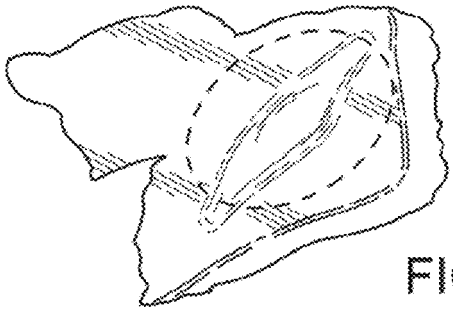

FIG. 28C

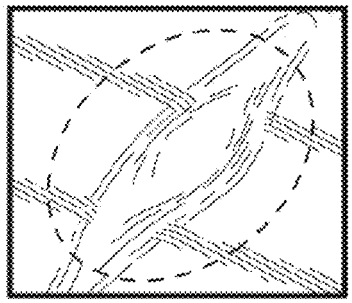

FIG. 28D

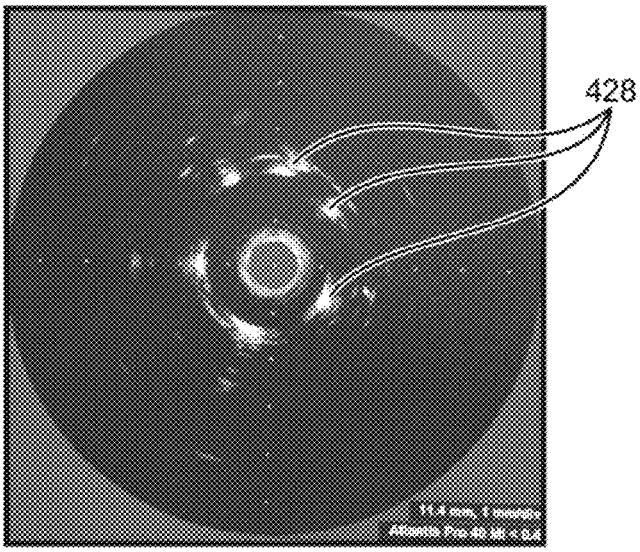

FIG. 29A

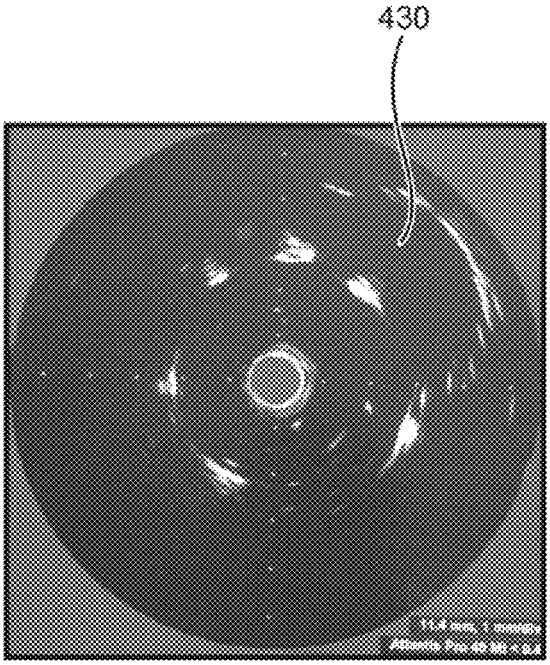

FIG. 29B

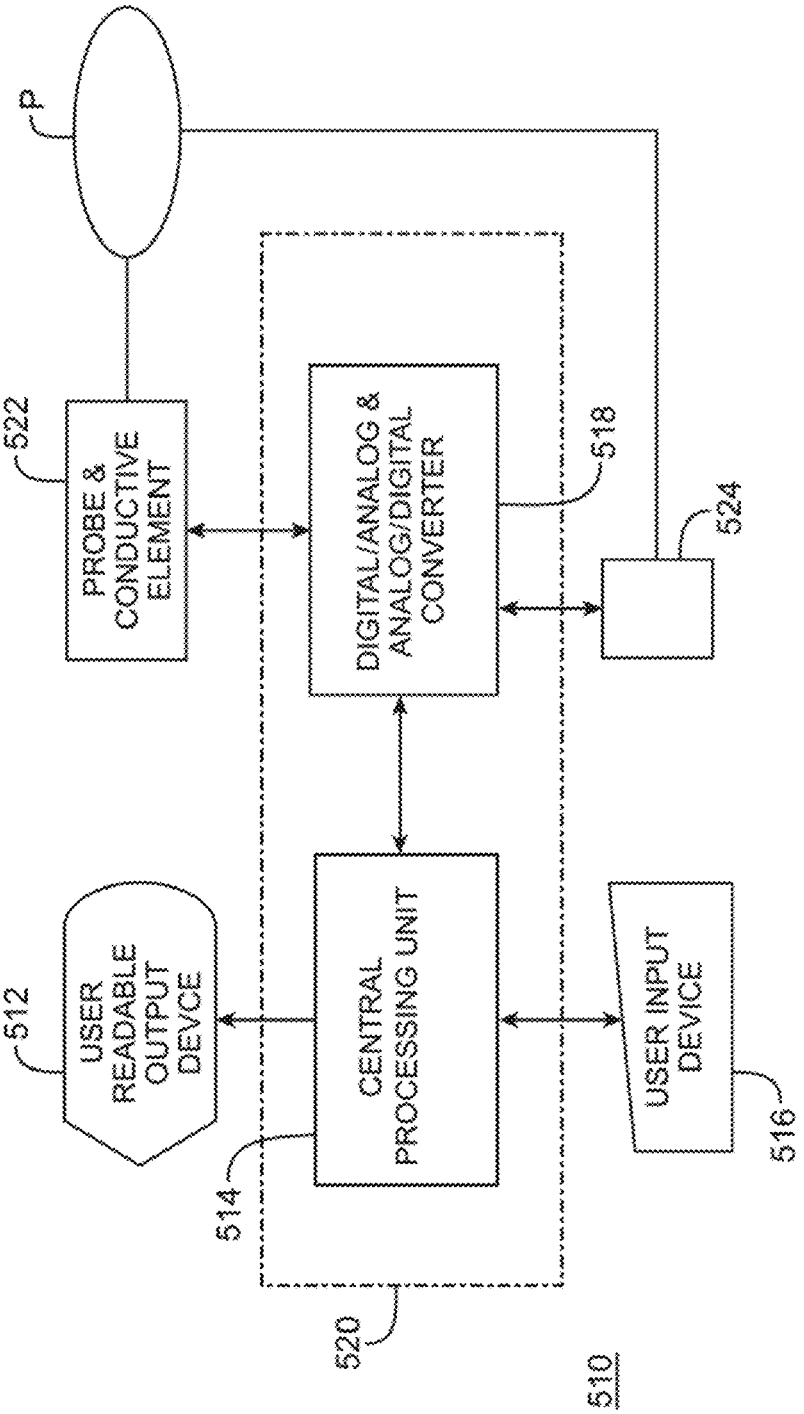
P
522
PROBE & CONDUCTIVE ELEMENT
DIGITAL/ANALOG & ANALOG/DIGITAL CONVERTER
518
524
512
USER READABLE OUTPUT DEVCE
CENTRAL PROCESSING UNIT
USER INPUT DEVICE
514
516
520
510

FIG. 30

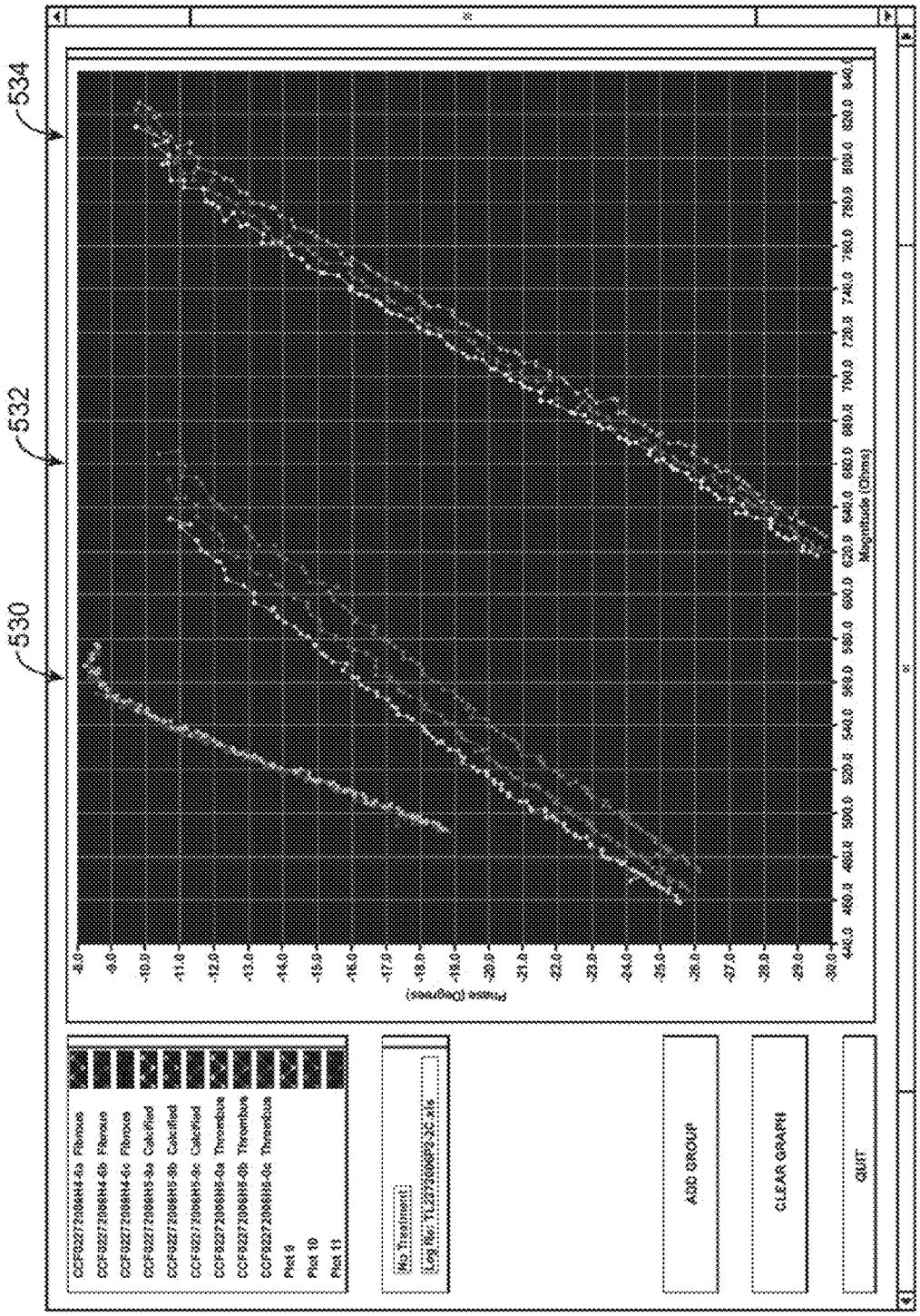
530
532
534
Phase (Degrees)
Magnitude (Ohms)
Plot 4
Plot 10
Plot 13
ADD GROUP
CLEAR GRAPH
QUIT

FIG. 31A

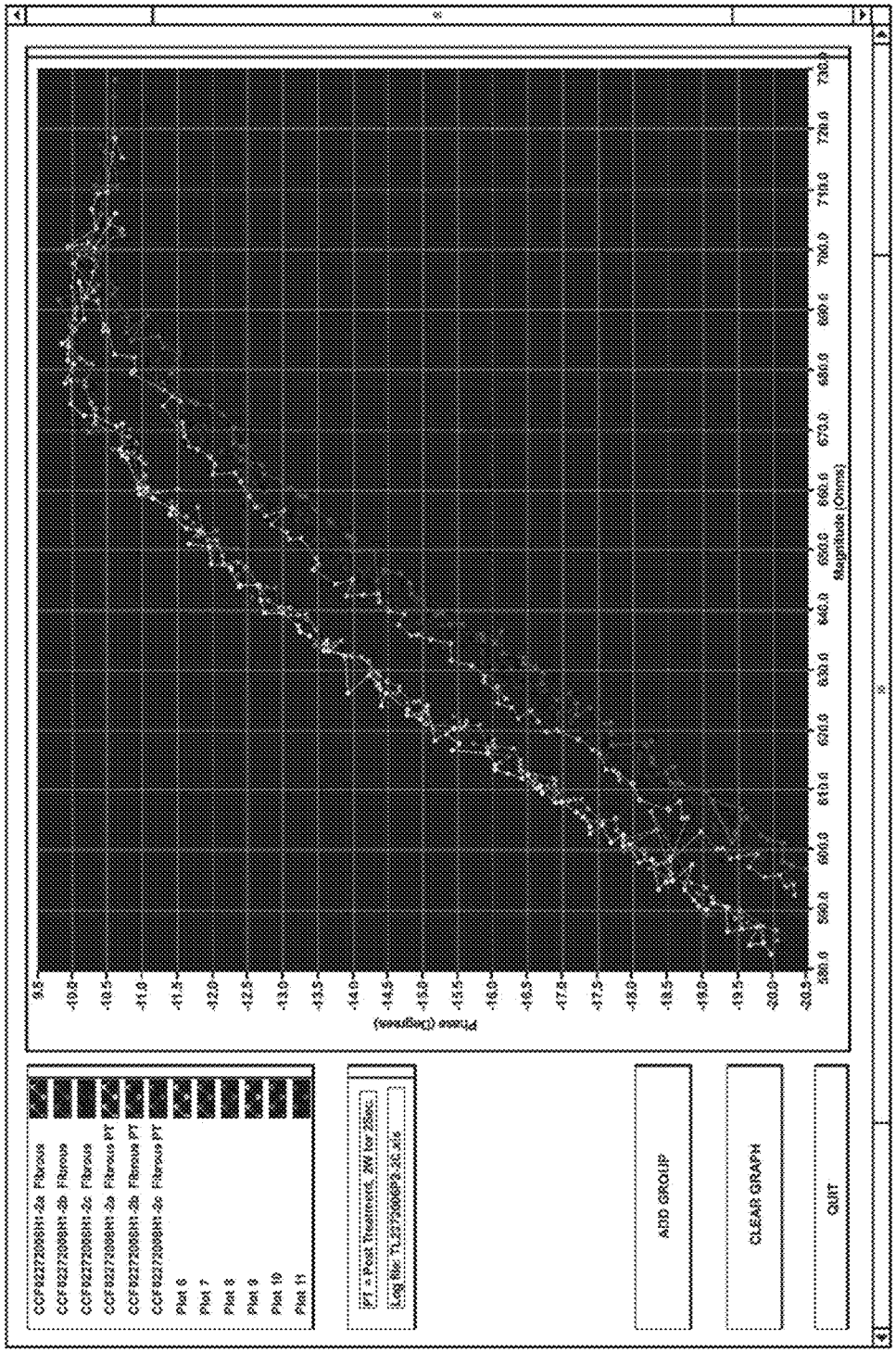
CCF9227208H1-2a Fibrous
CCF9227208H1-2b Fibrous
CCF9227208H1-2c Fibrous
CCF9227208H1-2a Fibrous PT
CCF9227208H1-2b Fibrous PT
CCF9227208H1-2c Fibrous PT
Plot 6
Plot 7
Plot 8
Plot 9
Plot 10
Plot 11
PT = Post Treatment, 2M for 25sec
Log file: TL227208H1-2C.txt
ADD GROUP
CLEAR GRAPH
QUIT
Phase (Degrees)
Magnitude (Ohms)

FIG. 31B

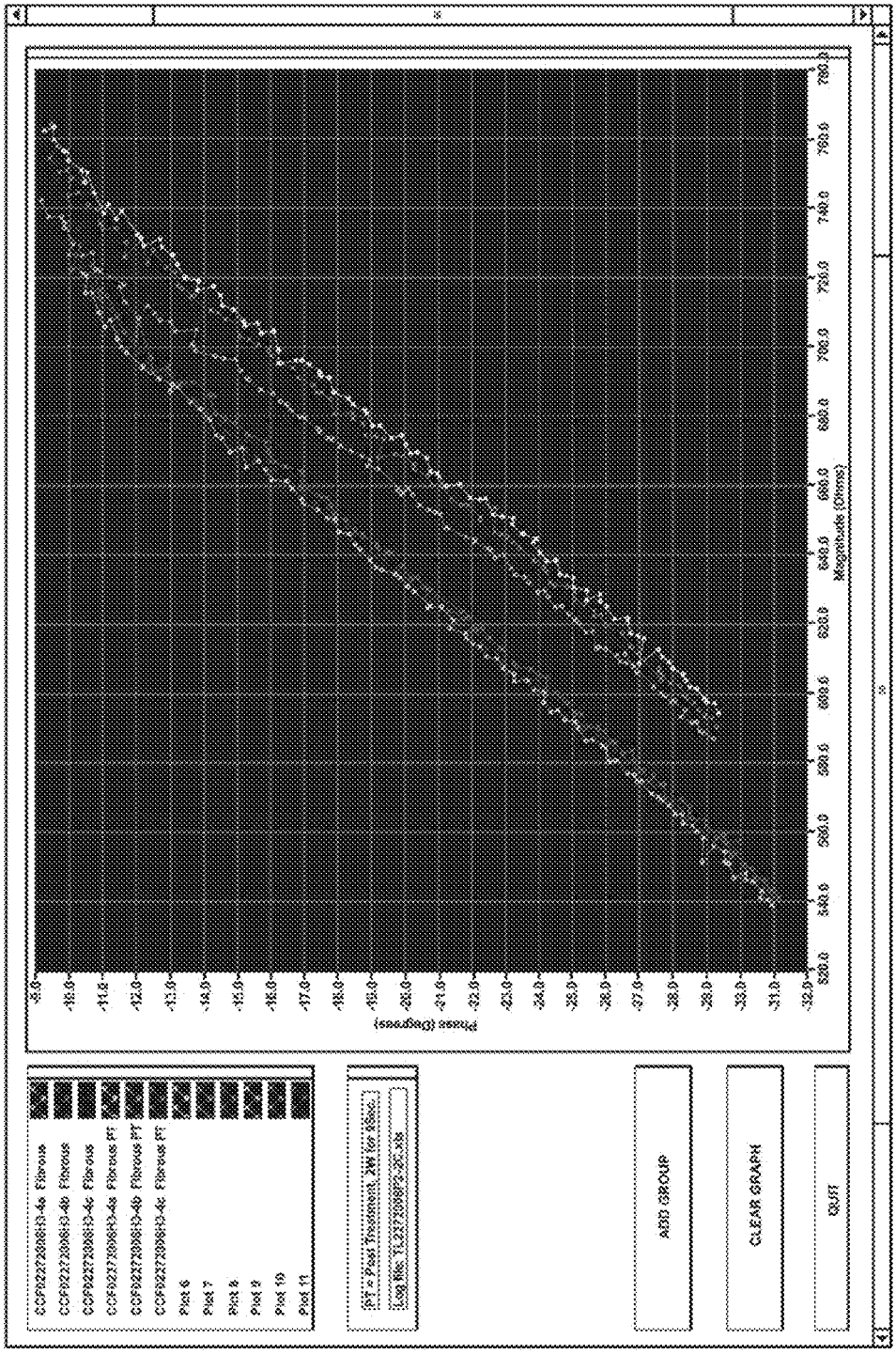

FIG. 31C

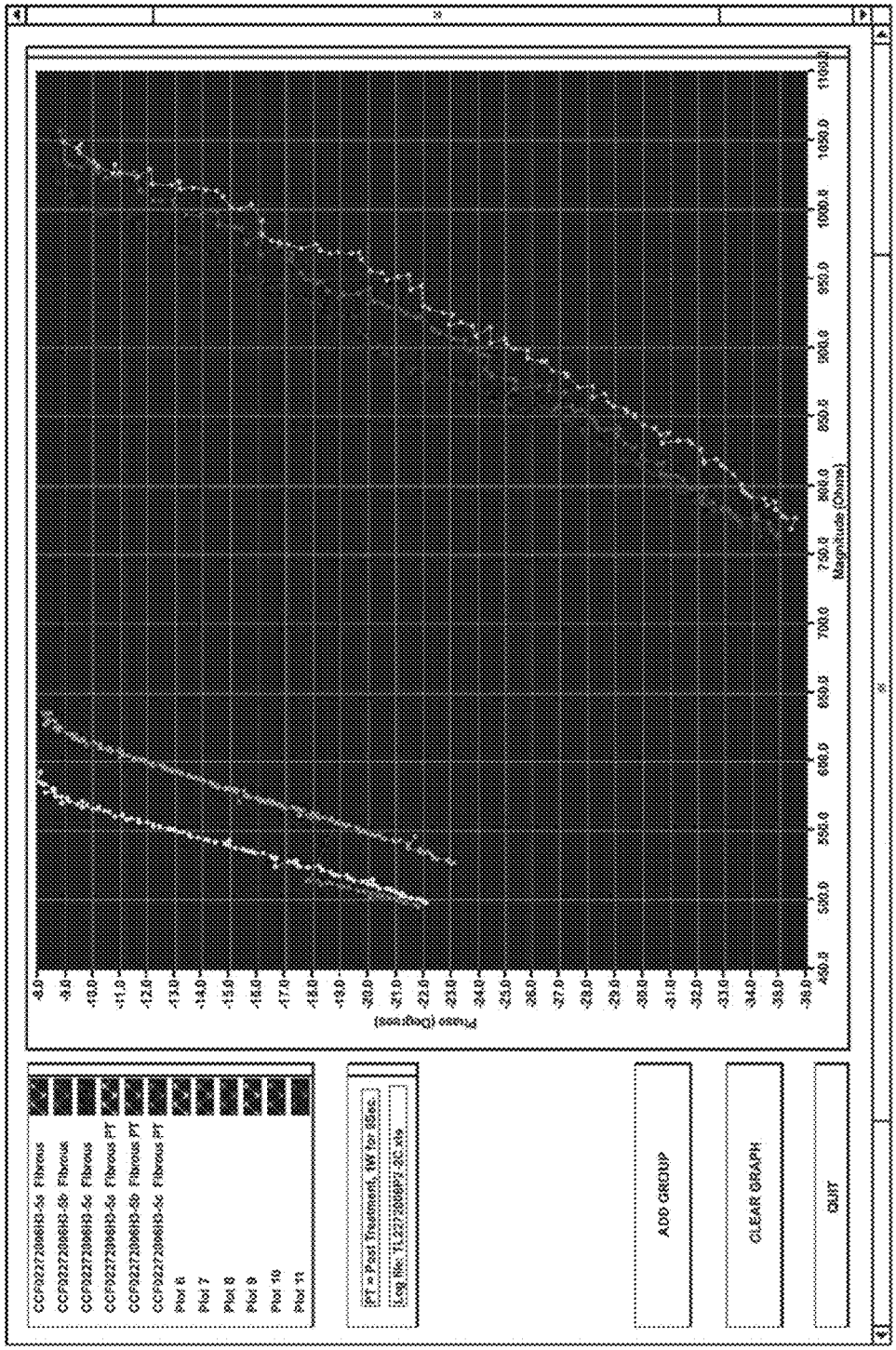
CCF9227208813-5a Fibrous
CCF9227208813-5b Fibrous
CCF9227208813-5c Fibrous
CCF9227208813-6a Fibrous PT
CCF9227208813-6b Fibrous PT
CCF9227208813-6c Fibrous PT
Plot 6
Plot 7
Plot 8
Plot 9
Plot 10
Plot 11
PT = Post Treatment, 1W for 8Sec.
Log file: TL227208813-2C.xls
ADD GROUP
CLEAR GRAPH
EXIT
Phase (Degrees)
Magnitude (Ohms)

FIG. 31D

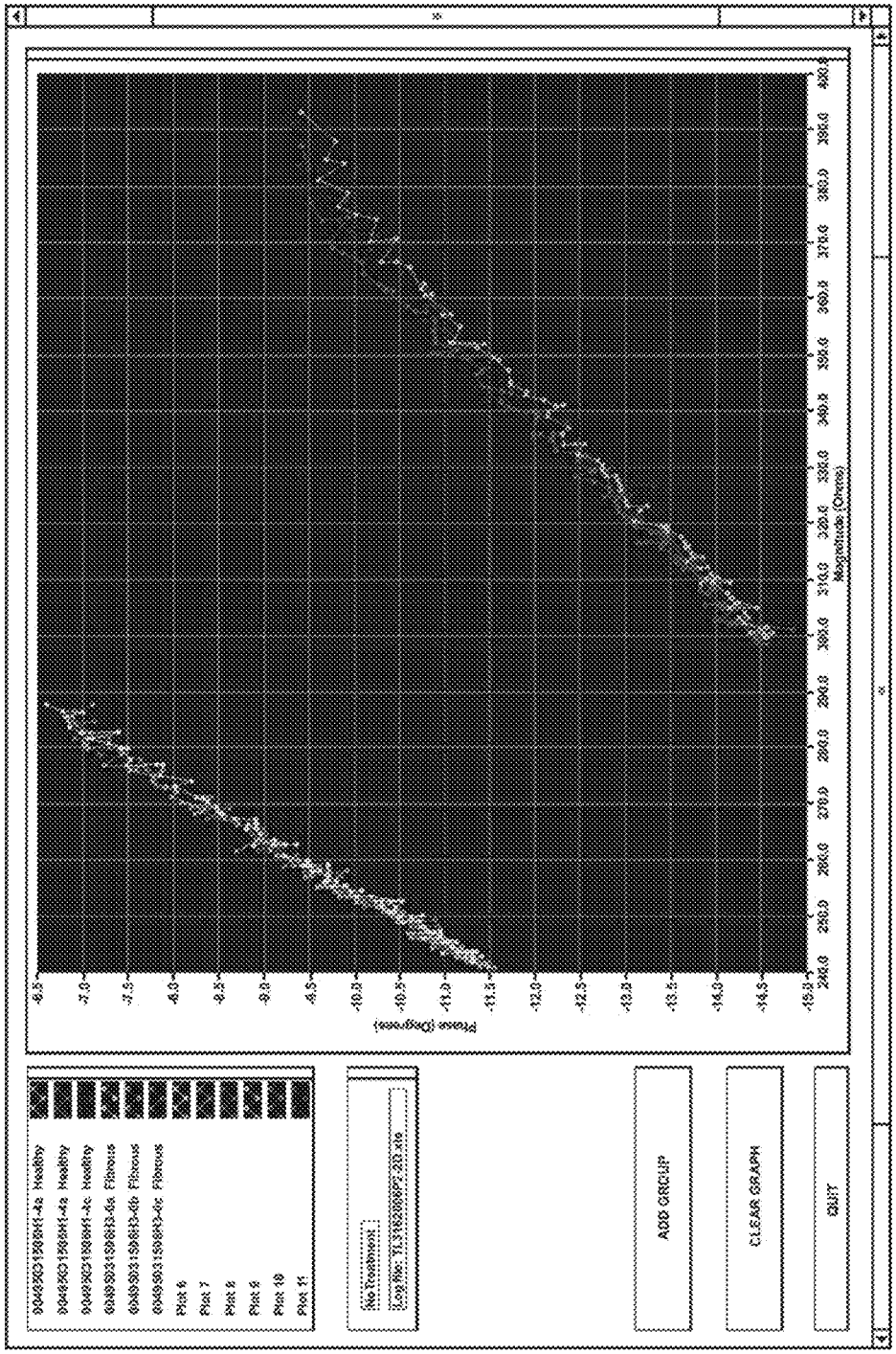
Plot 6
Plot 7
Plot 8
Plot 9
Plot 10
Plot 11
No Treatment
ADD GROUP
CLEAR GRAPH
QUIT
Phase (Degrees)
Magnitude (Ohms)

FIG. 31E

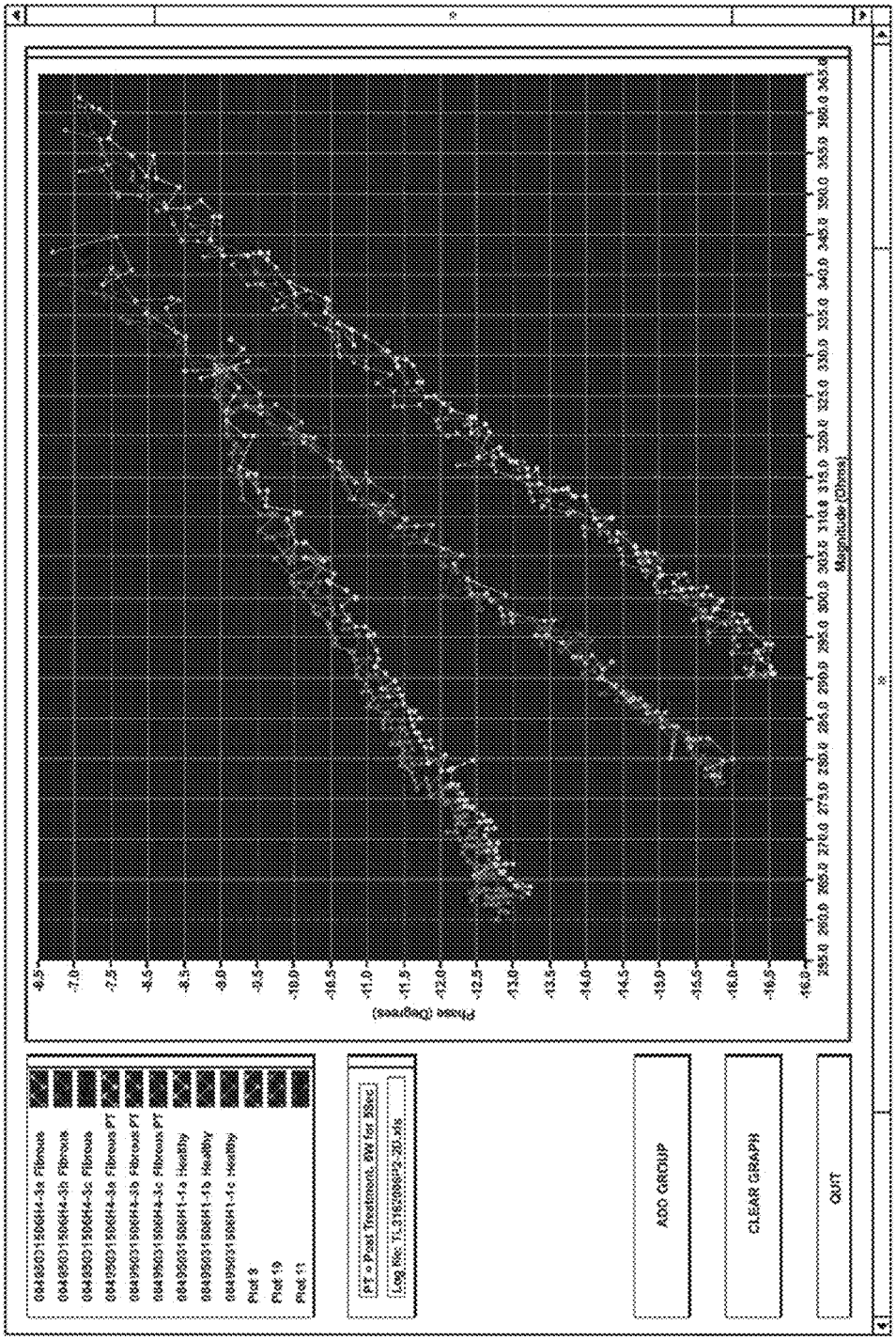
Phase (Degrees)
Magnitude (Ohms)
Plot 9
Plot 19
Plot 11
ADD GROUP
CLEAR GRAPH
QUIT

FIG. 31F

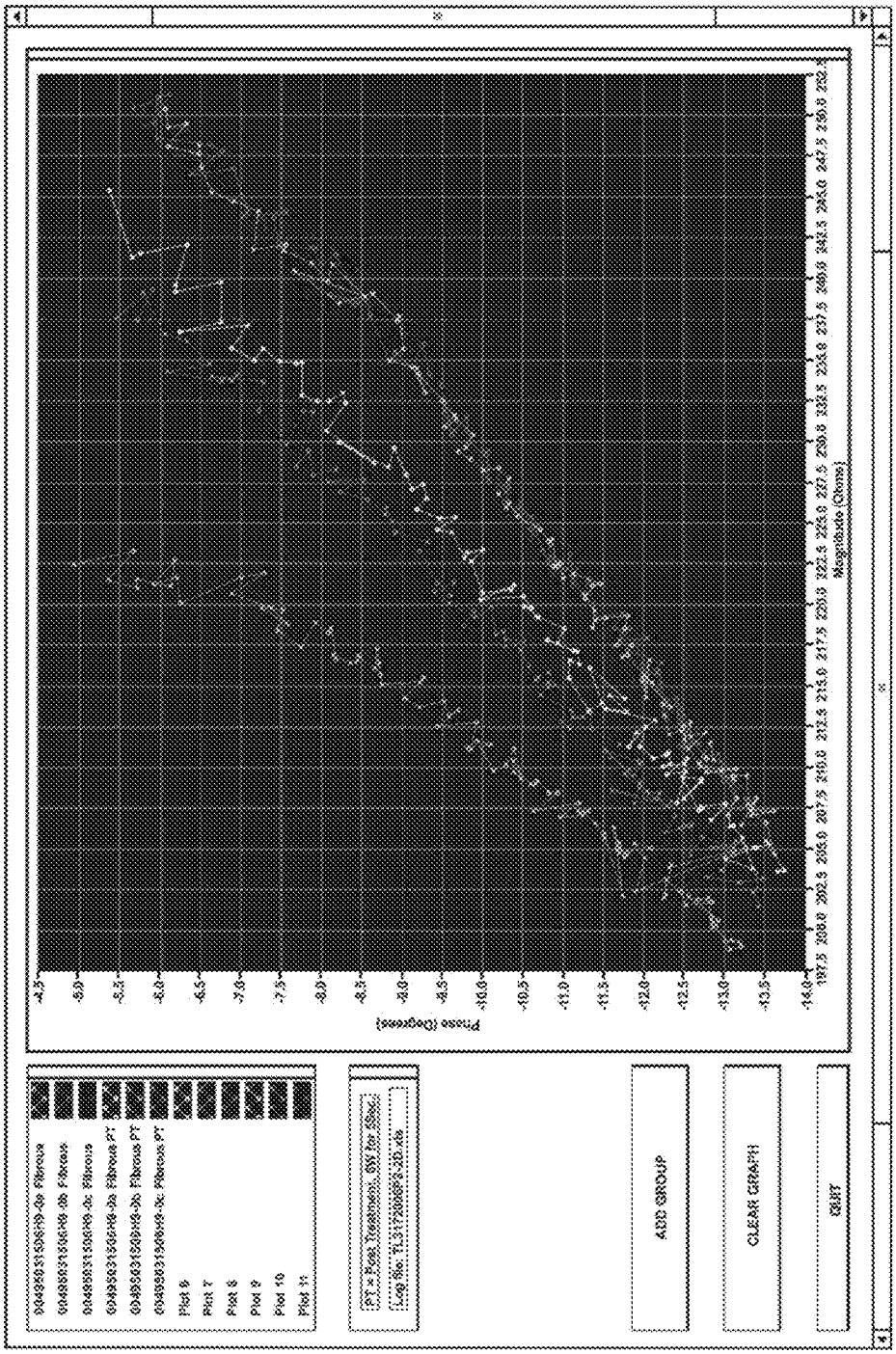
Plot 6
Plot 7
Plot 8
Plot 9
Plot 10
Plot 11
ADD GROUP
CLEAR GRAPH
QUIT
Phase (Degrees)
Magnitude (Ohms)

FIG. 31G

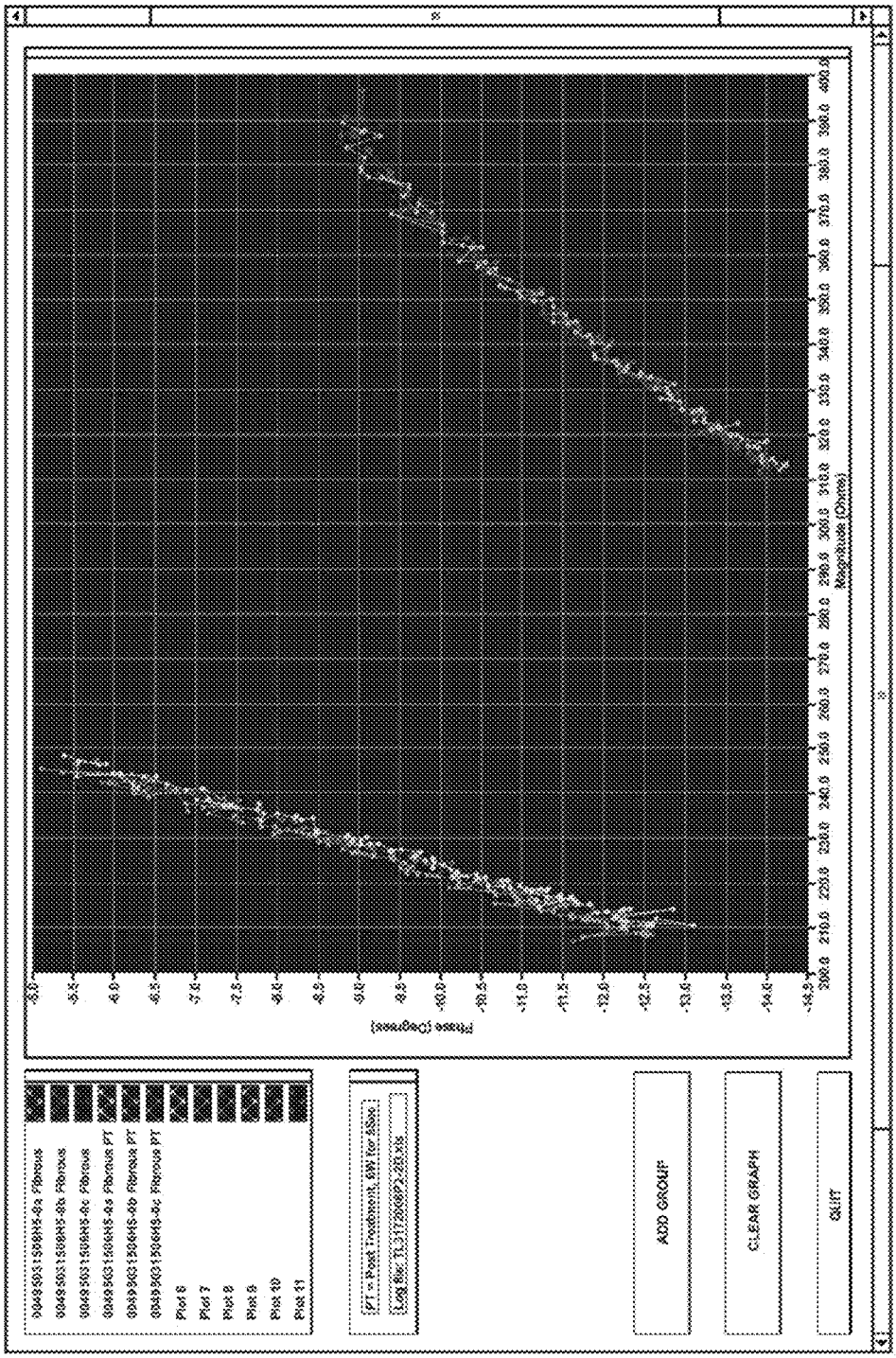
Phase (Degrees)
Magnitude (Ohms)
Plot 6
Plot 7
Plot 8
Plot 9
Plot 10
Plot 11
ADD GROUP
CLEAR GRAPH
QUIT

FIG. 31H

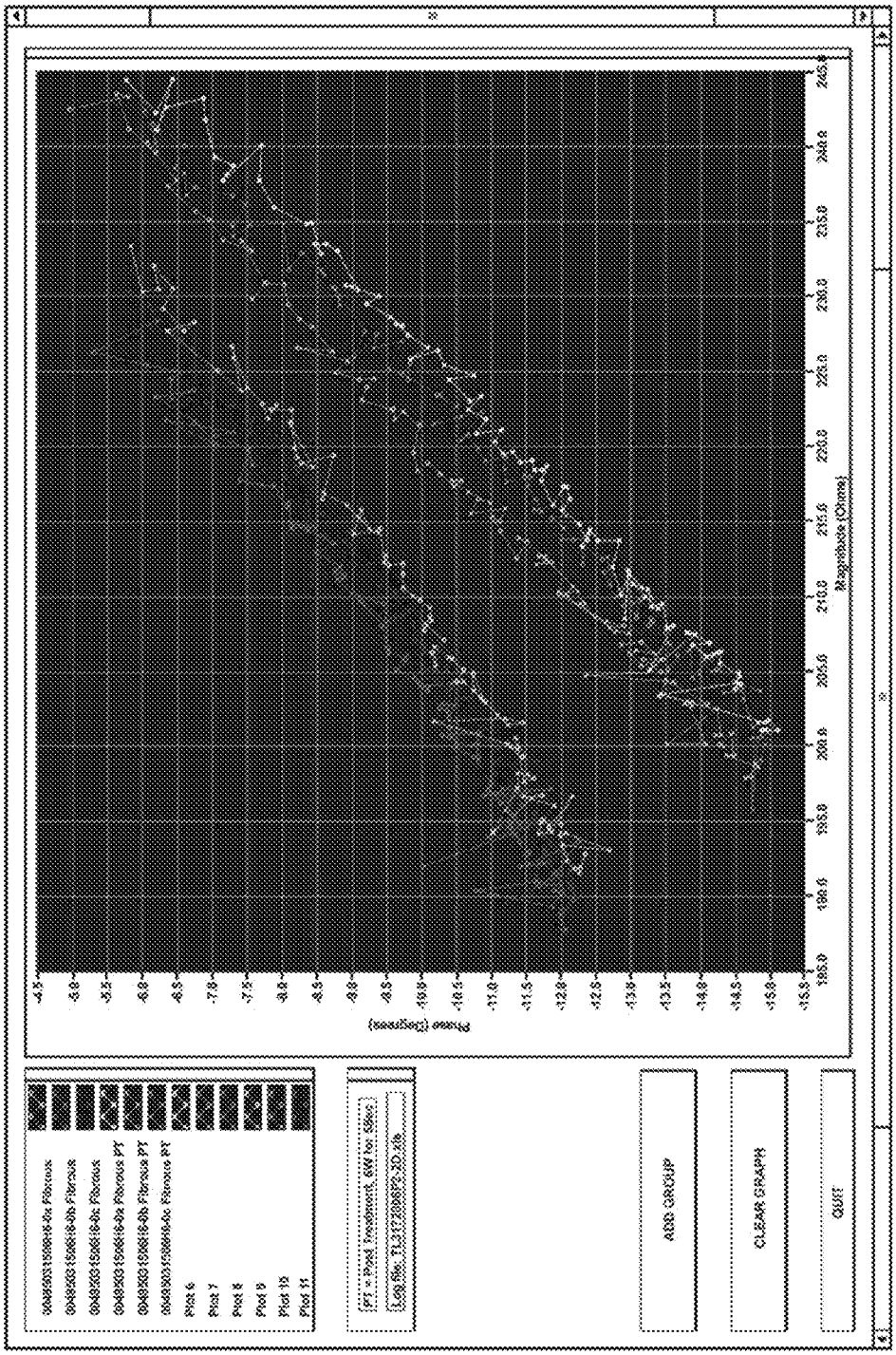
Plot 6
Plot 7
Plot 8
Plot 9
Plot 10
Plot 11
ADD GROUP
CLEAR GRAPH
QUIT
Phase (Degrees)
Magnitude (Ohms)

FIG. 31I

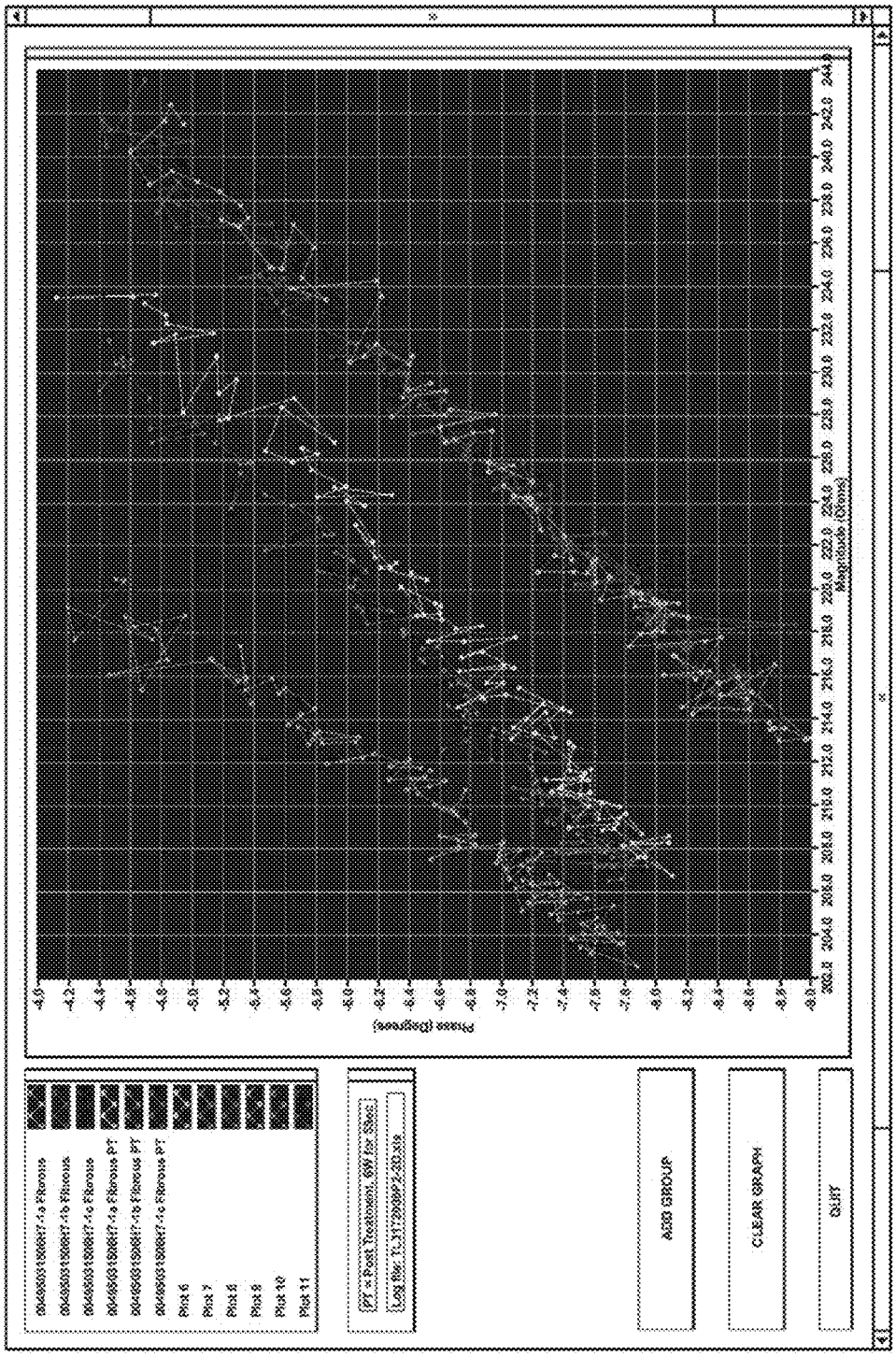
Phase (Degrees)
Magnitude (Bins)
Plot 6
Plot 7
Plot 8
Plot 9
Plot 10
Plot 11
ADD GROUP
CLEAR GRAPH
QUIT

FIG. 31J

FIG. 32

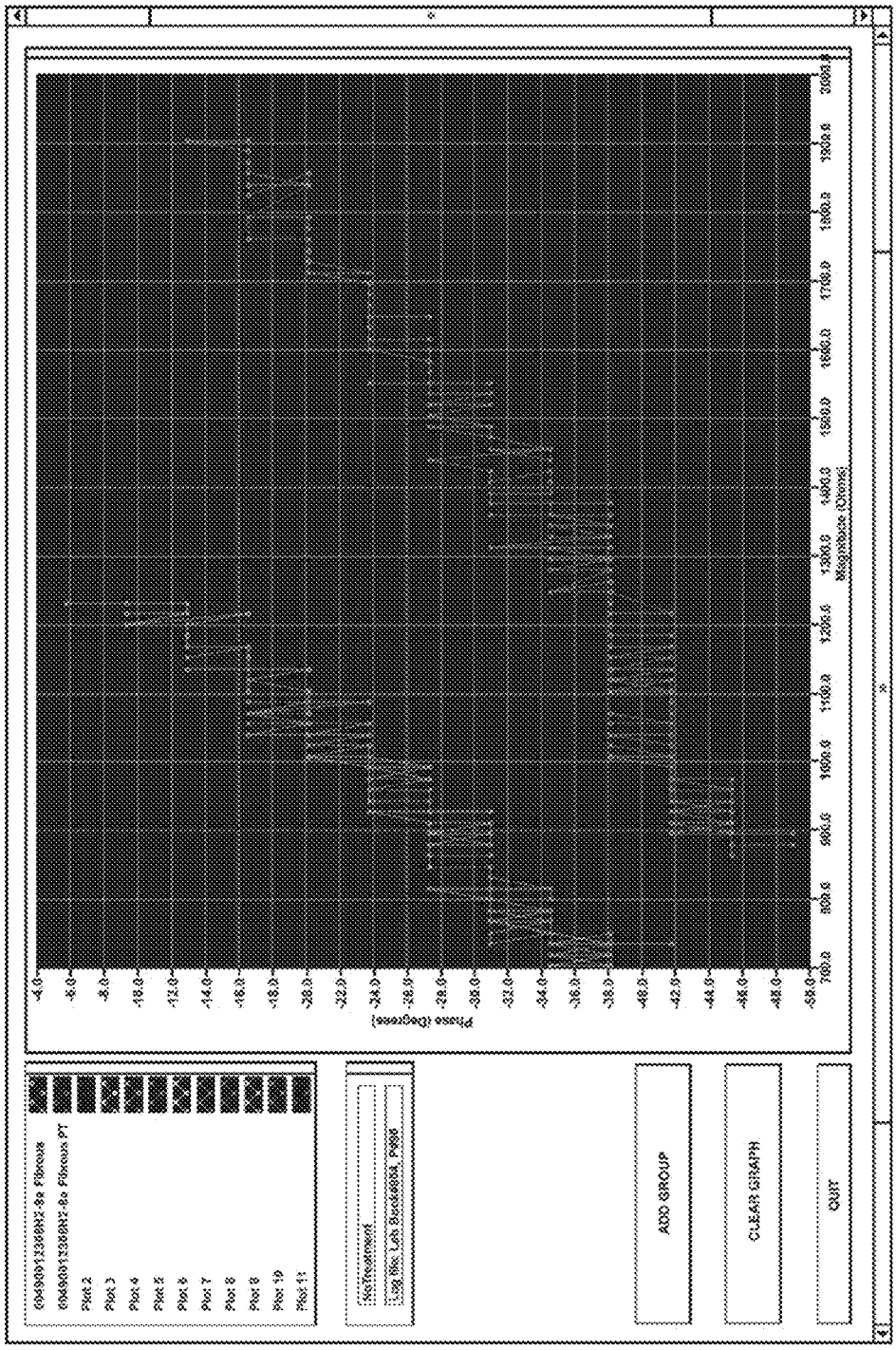
Plot 2
Plot 3
Plot 4
Plot 5
Plot 6
Plot 7
Plot 8
Plot 9
Plot 10
Plot 11
Phase (Degrees)
Magnitude (Ohms)
ADD GROUP
CLEAR GRAPH
QUIT

FIG. 32A

FIG. 32B

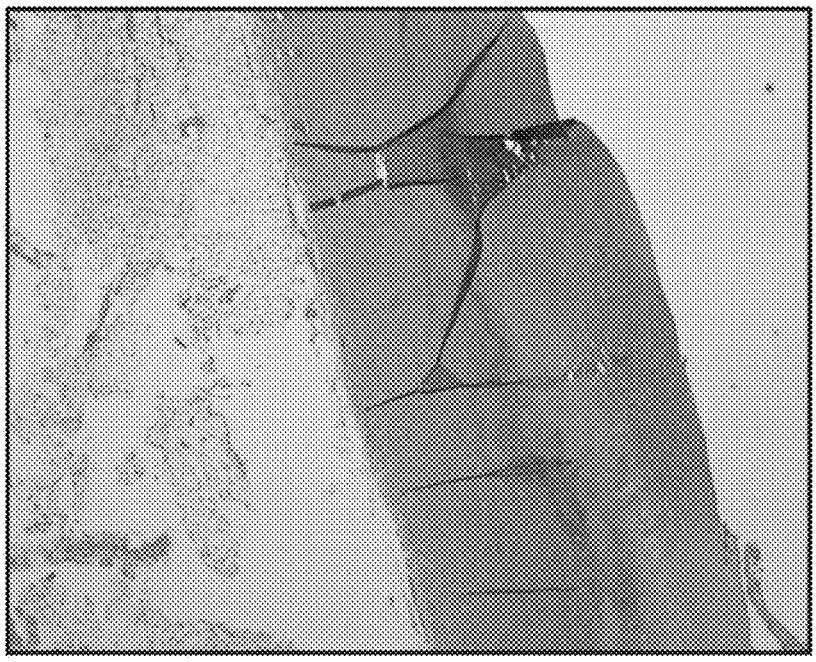

FIG. 32C

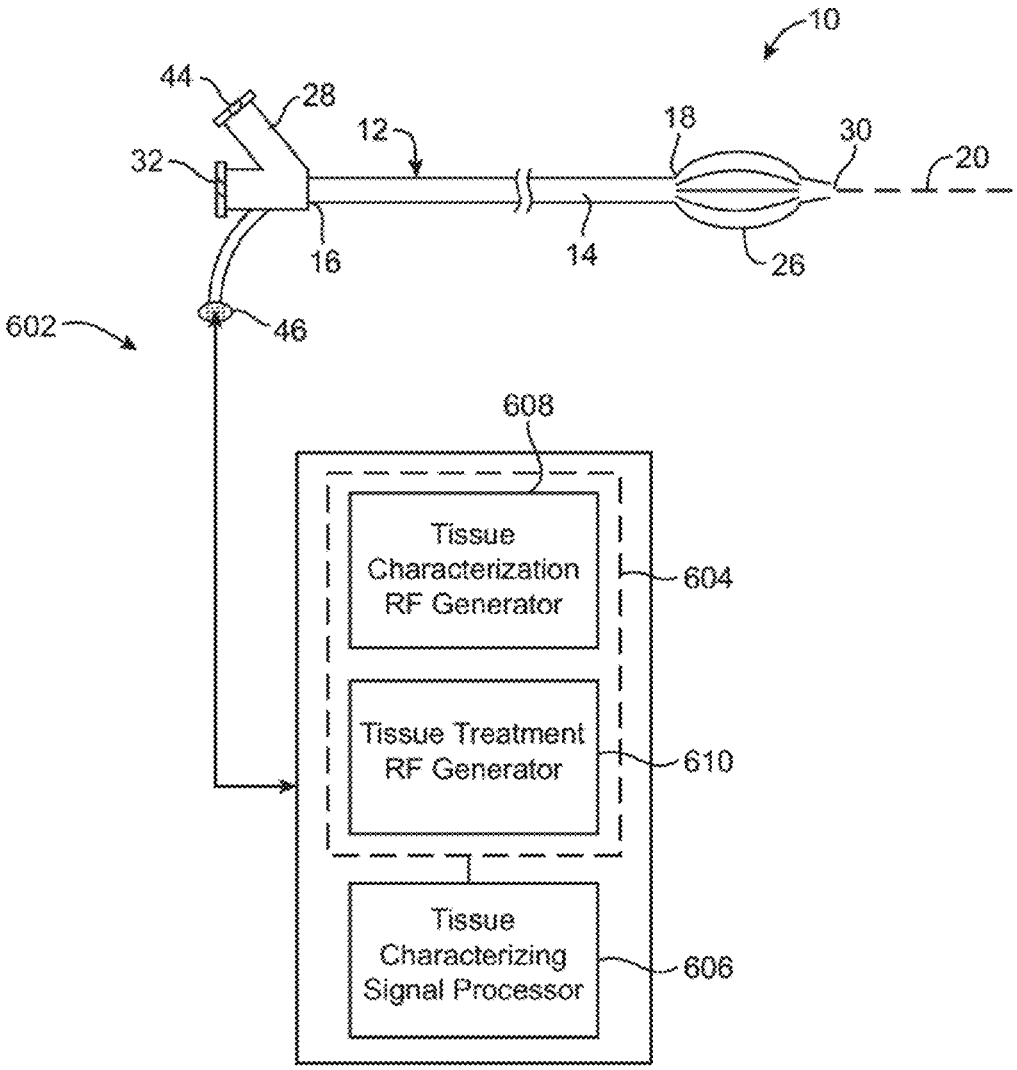
10
44
28
12
18
30
20
32
16
14
26
602
46
608
Tissue Characterization RF Generator
604
Tissue Treatment RF Generator
610
Tissue Characterizing Signal Processor
606

FIG. 33

FIG. 33A

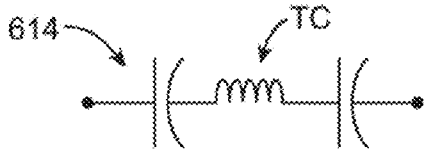

FIG. 33B

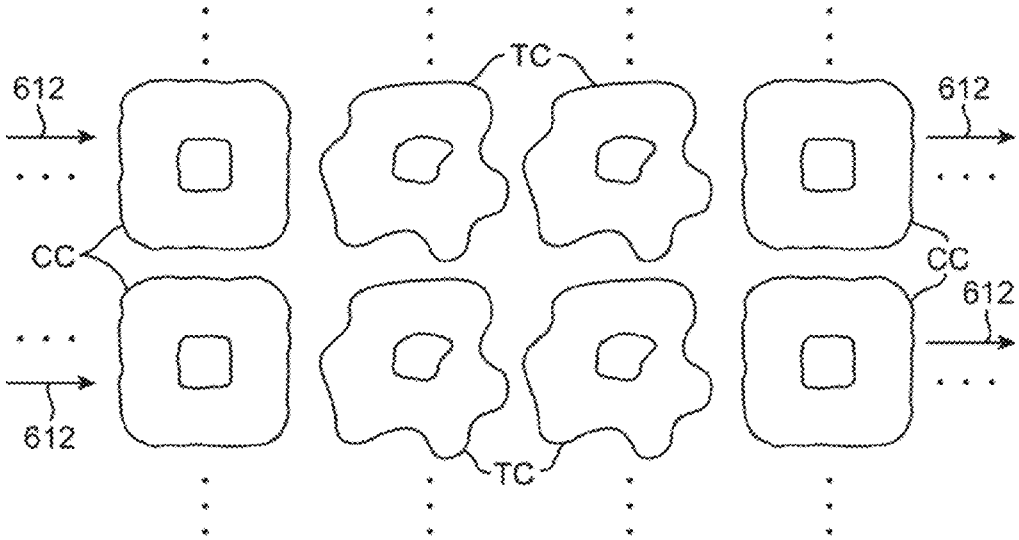

FIG. 34A

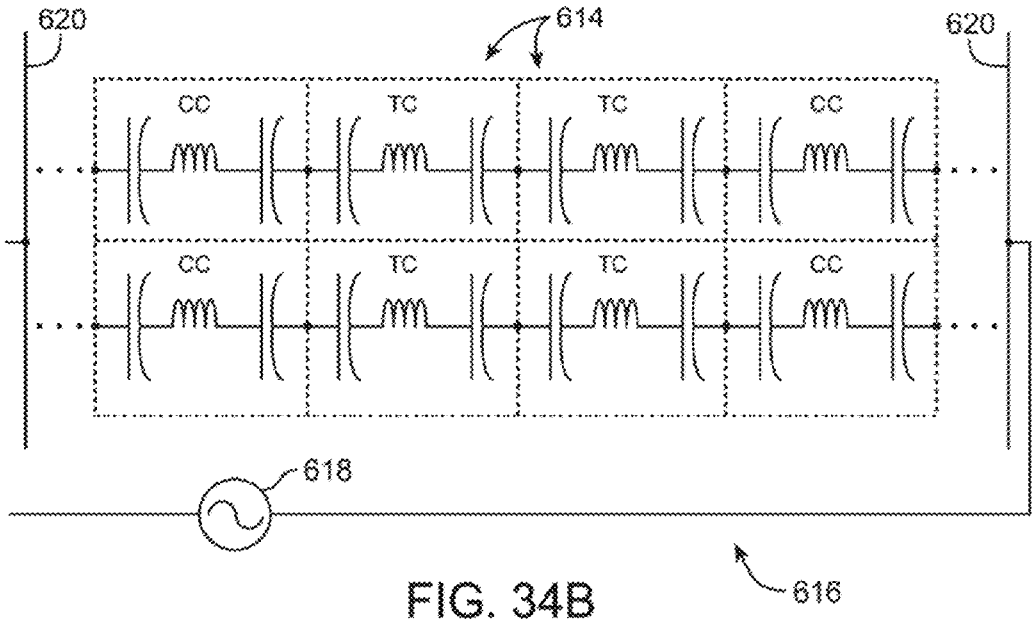

FIG. 34B

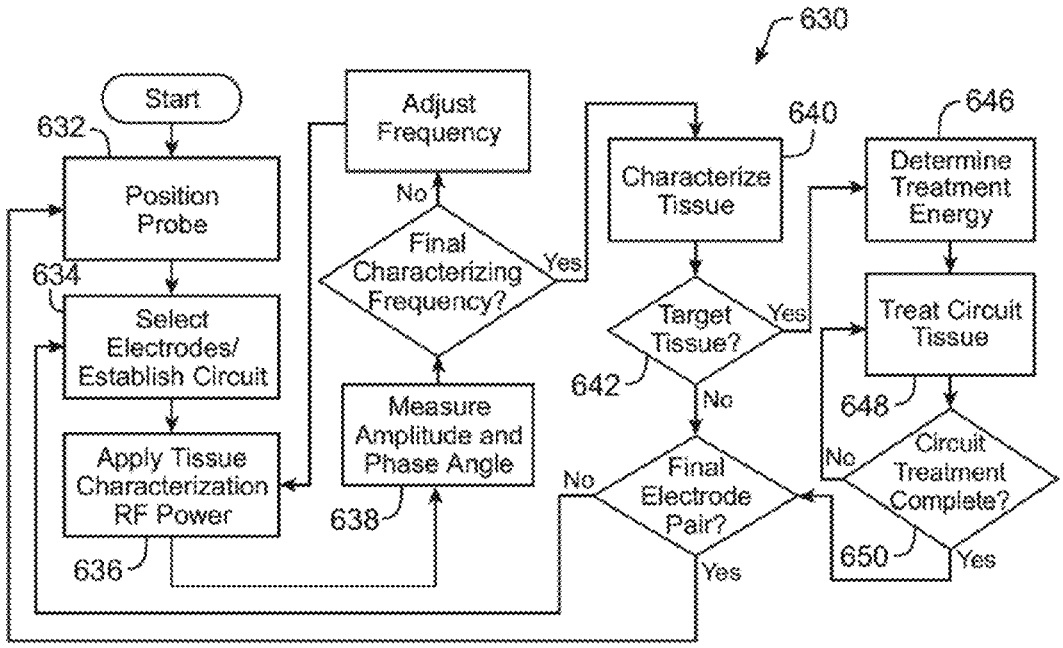

FIG. 35

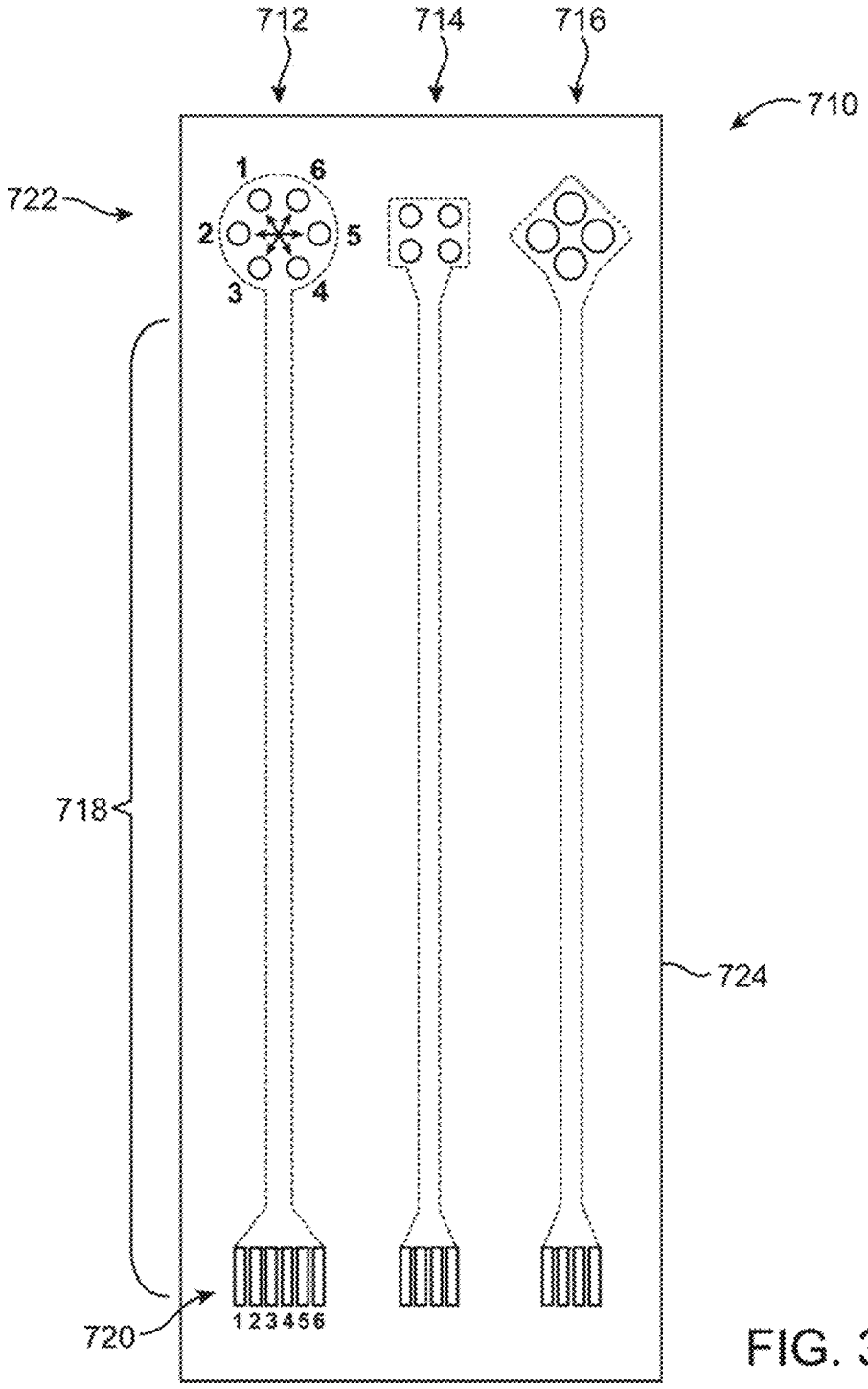

FIG. 36

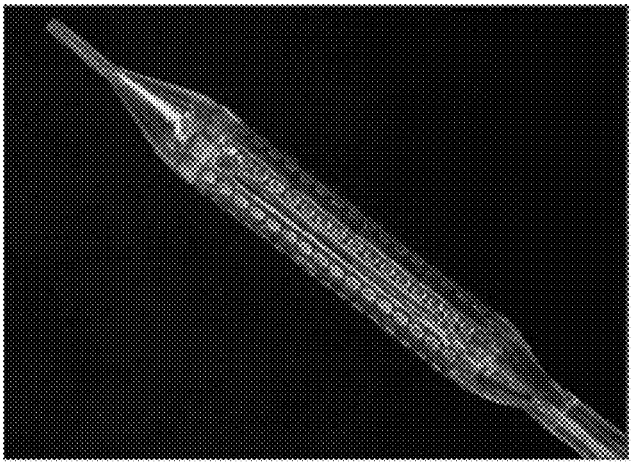

FIG. 37A

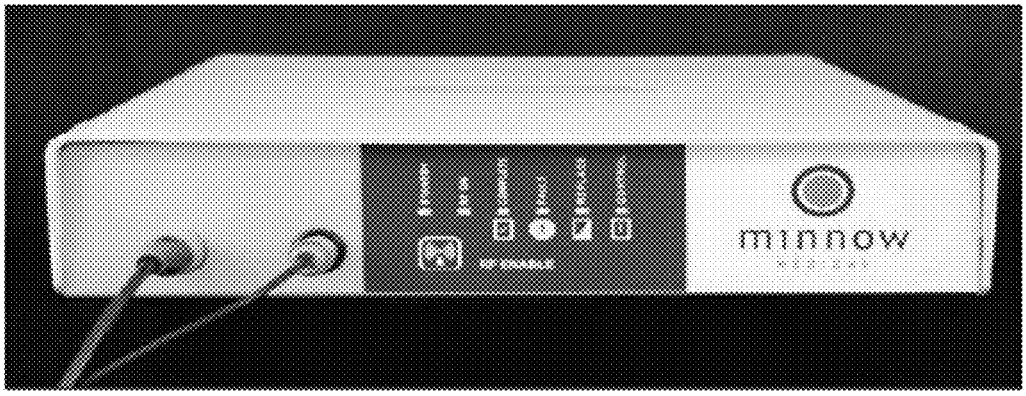

FIG. 37B

Survival	Data	# of Animals	# of Sites	Energy setting (Joules)	Power setting (Watts)	Time setting (seconds)
6-9 days	All Sites	9.5	34	1-135	1-15	1-10
	Included	**5**	**20**	**1-32**	**1-10**	**1-4**
32-36 days	All Sites	3	13	2-32	1-10	1-8
	Included	**1**	**6**	**15-32**	**4-5**	**3-8**
82-90 days	All Sites	3.5	16	2-112	1-20	1-9
	Included	**3**	**14**	**2-10**	**1-5**	**2-4**

FIG. 38A

Total N	Power setting (Watts)	Time setting (seconds)	Energy setting (Joules)
2	1	1	1.0
2	1	2	2.0
3	2	1	2.0
6	2	2	4.0
4	2	3	6.0
2	2	4	8.0
4	3	2	6.0
2	4	2	8.0
1	4	4	16.0
1	4	6	24.0
1	4	8	32.0
4	5	2	10.0
4	5	3	15.0
1	6	4	24.0
1	8	2	16.0
1	8	4	32.0
1	10	2	20.0

FIG. 38B

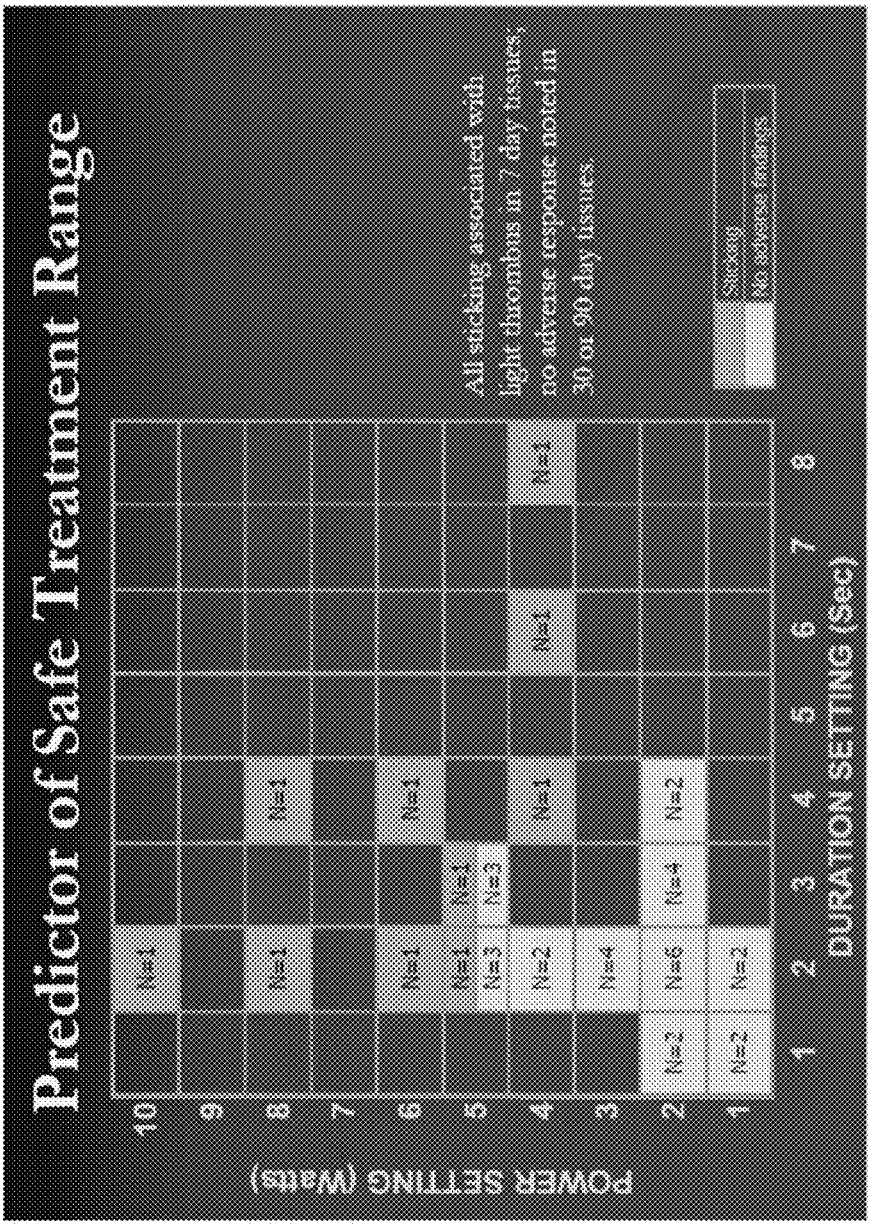
Predictor of Safe Treatment Range
POWER SETTING (Watts)
DURATION SETTING (Sec)
All sticking associated with light thrombus in 7 day tissues; no adverse response noted in 30 or 90 day tissues.
Sticking
No adverse findings

FIG. 39

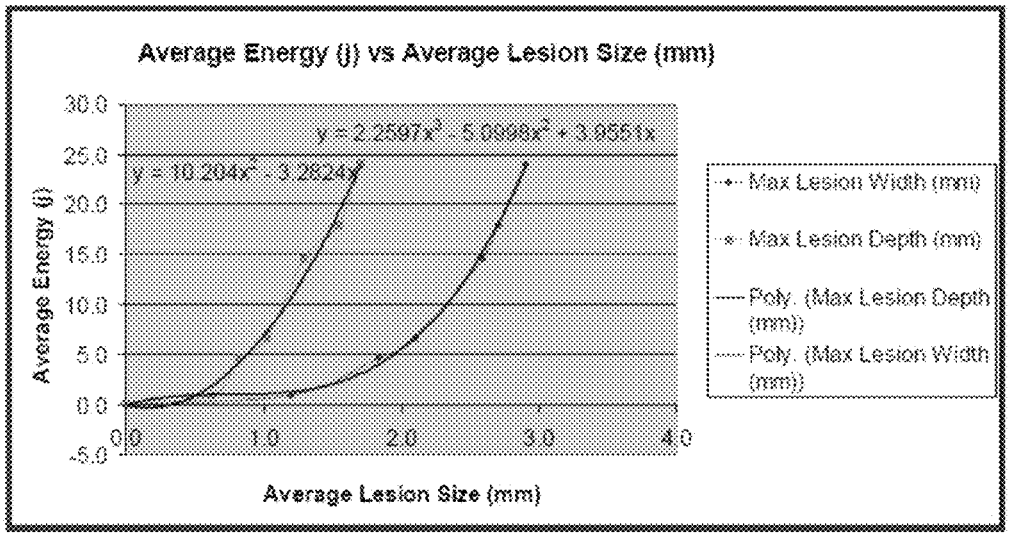

FIG. 40A

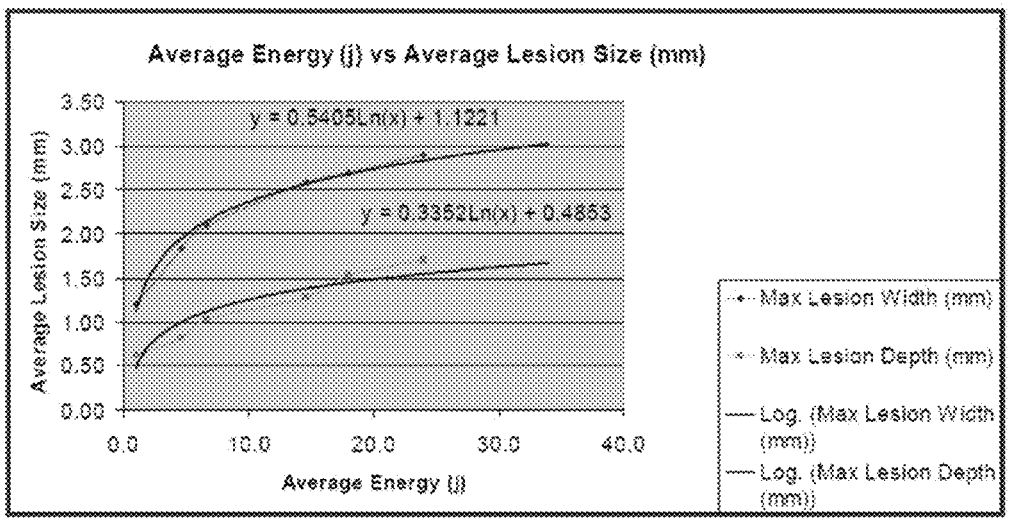

FIG. 40B

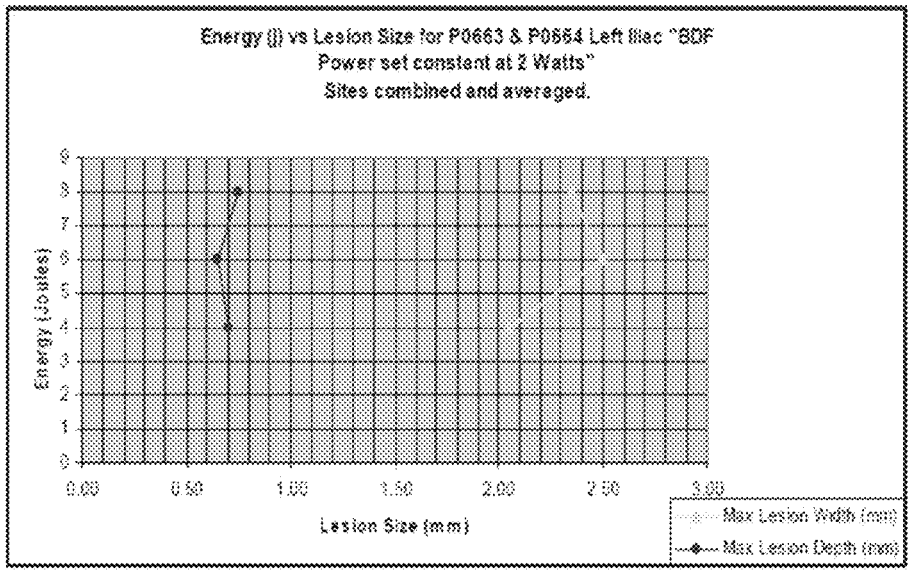
Energy (j) vs Lesion Size for P0663 & P0664 Left Iliac "BDF
Power set constant at 2 Watts"
Sites combined and averaged.
Energy (Joules)
Lesion Size (mm)
Max Lesion Width (mm)
Max Lesion Depth (mm)

FIG. 41

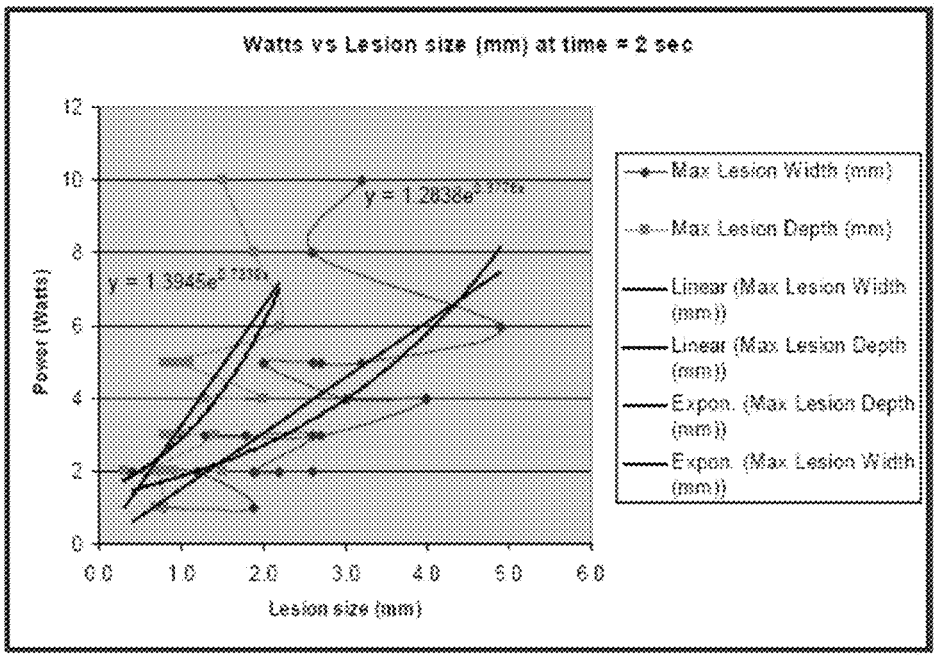
Watts vs Lesion size (mm) at time = 2 sec
Power (Watts)
Lesion size (mm)
Max Lesion Width (mm)
Max Lesion Depth (mm)
Linear (Max Lesion Width (mm))
Linear (Max Lesion Depth (mm))
Expon. (Max Lesion Depth (mm))
Expon. (Max Lesion Width (mm))

FIG. 42

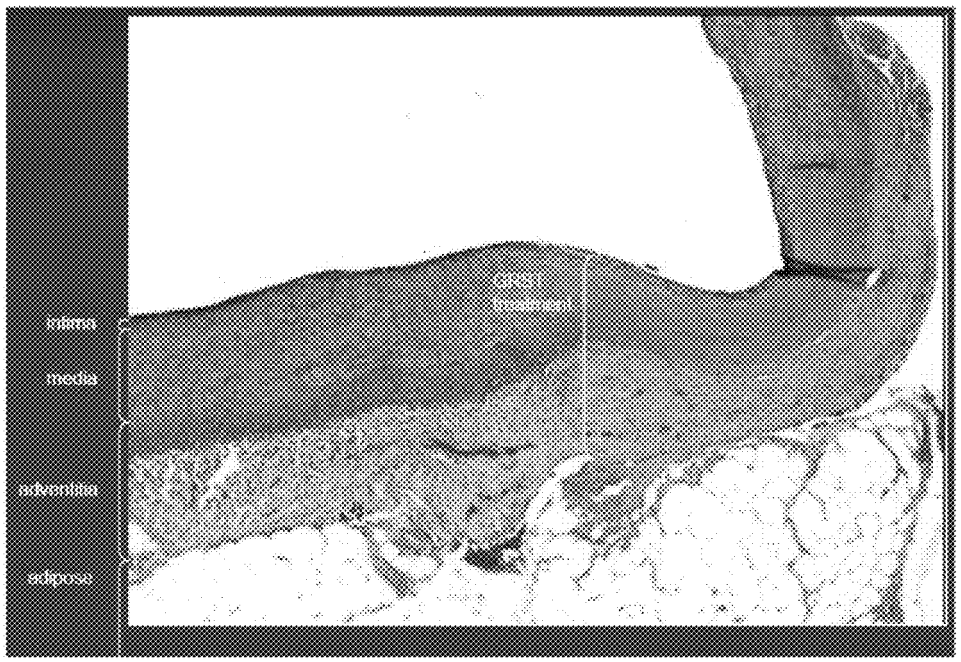

FIG. 42A

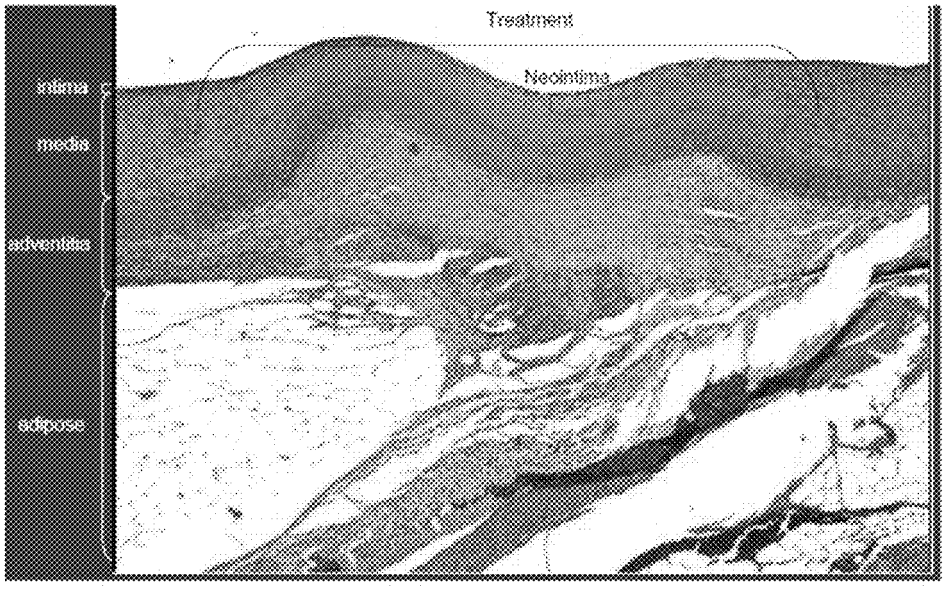

FIG. 42B

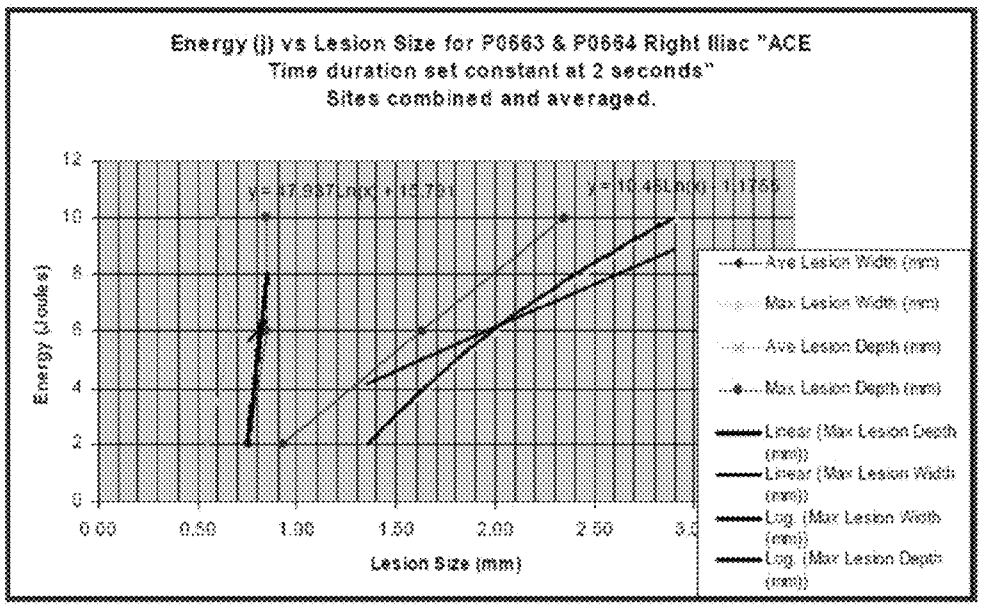
Energy (j) vs Lesion Size for P0563 & P0564 Right Iliac "ACE
Time duration set constant at 2 seconds"
Sites combined and averaged.
Energy (Joules)
Lesion Size (mm)
0
2
4
6
8
10
12
0.00
0.50
1.00
1.50
2.00
2.50
Ave Lesion Width (mm)
Max Lesion Width (mm)
Ave Lesion Depth (mm)
Max Lesion Depth (mm)
Linear (Max Lesion Depth (mm))
Linear (Max Lesion Width (mm))
Log. (Max Lesion Width (mm))
Log. (Max Lesion Depth (mm))

FIG. 43

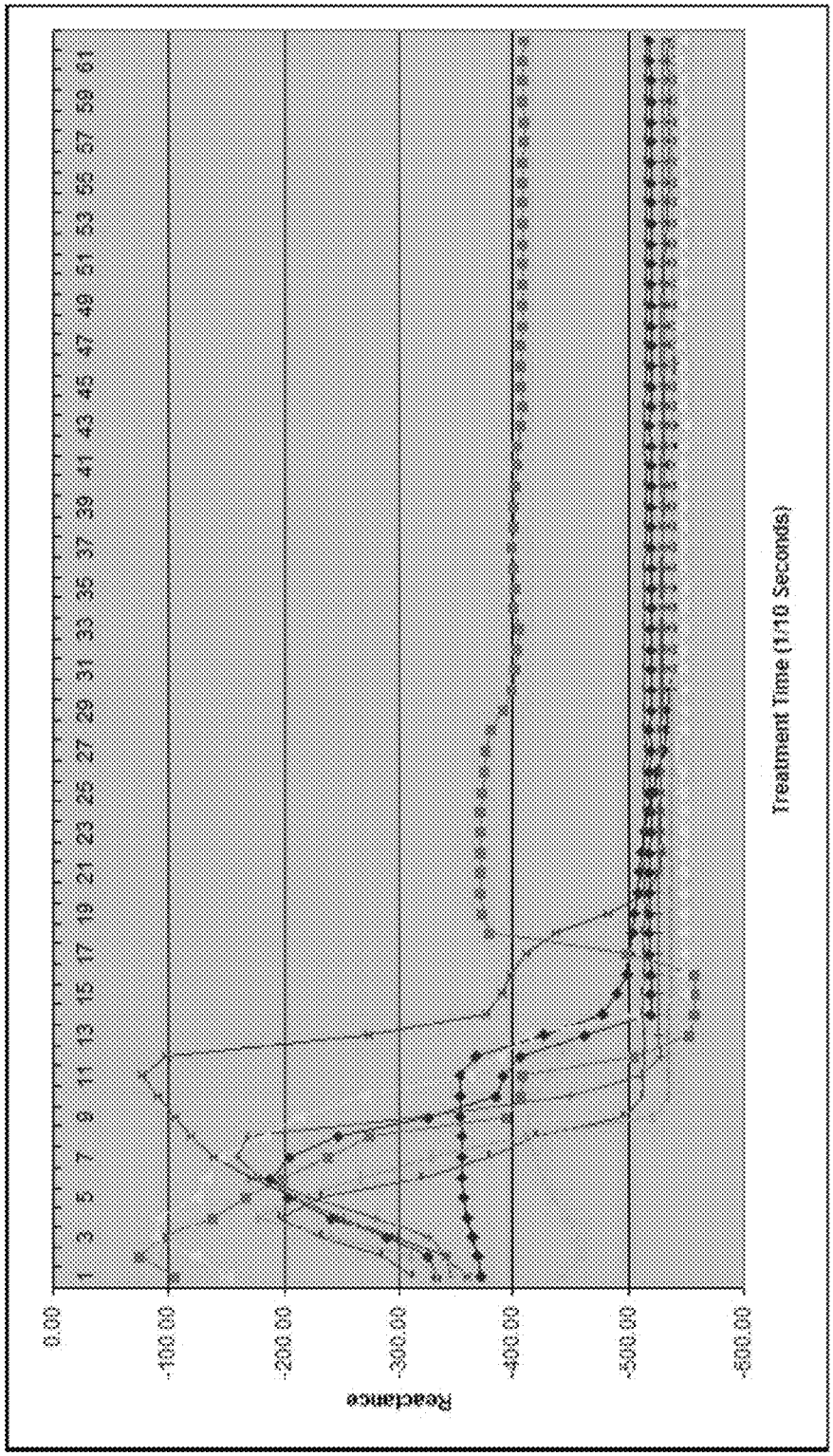
Reactance
0.00
-100.00
-200.00
-300.00
-400.00
-500.00
-600.00
1 3 5 7 9 11 13 15 17 19 21 23 25 27 29 31 33 35 37 39 41 43 45 47 49 51 53 55 57 59 61
Treatment Time (1/10 Seconds)

FIG. 44A

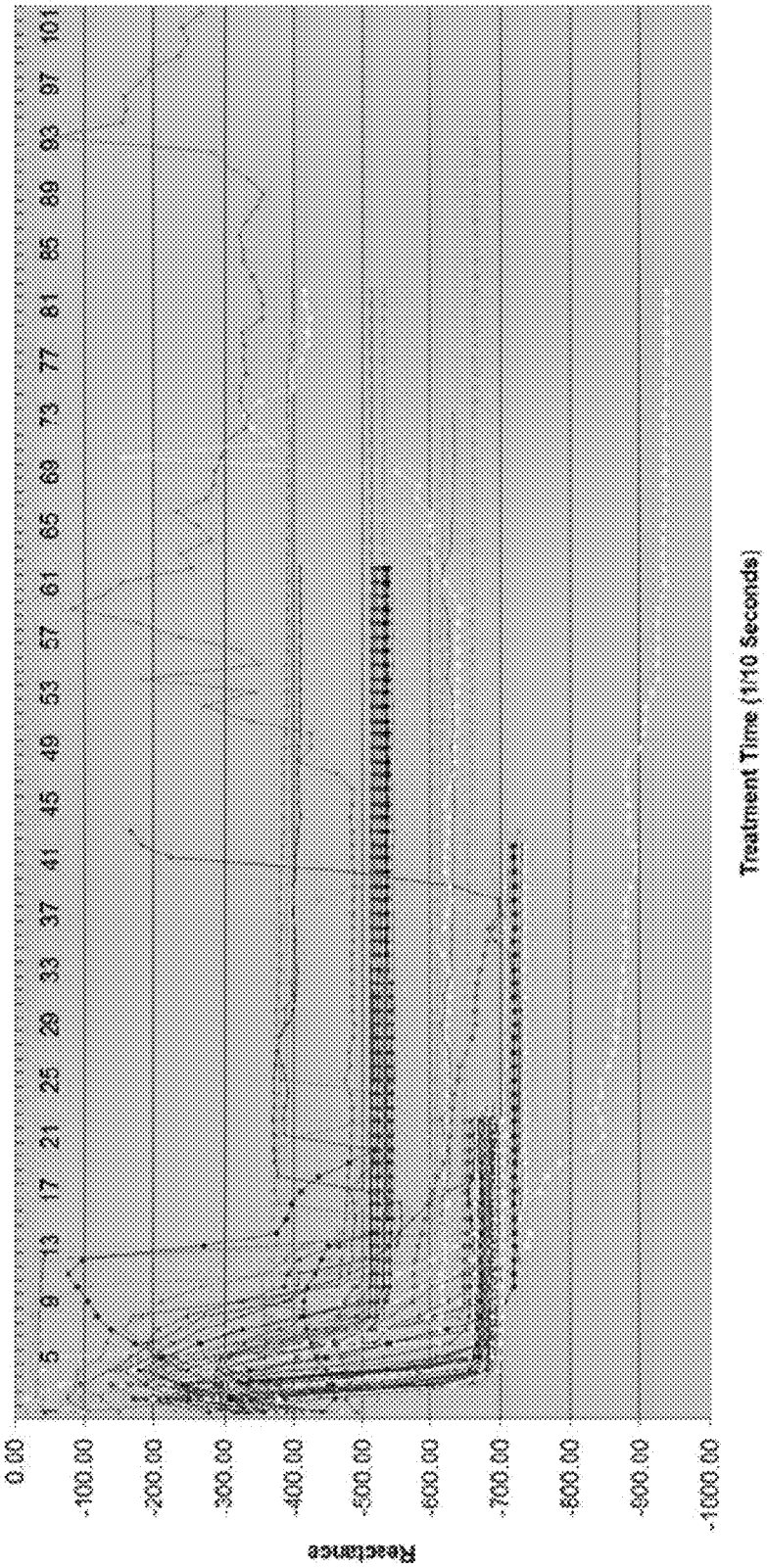
Reactance
0.00
-100.00
-200.00
-300.00
-400.00
-500.00
-600.00
-700.00
-800.00
-900.00
-1000.00
1 5 9 13 17 21 25 29 33 37 41 45 49 53 57 61 65 69 73 77 81 85 89 93 97 101
Treatment Time (1/10 Seconds)

FIG. 44B

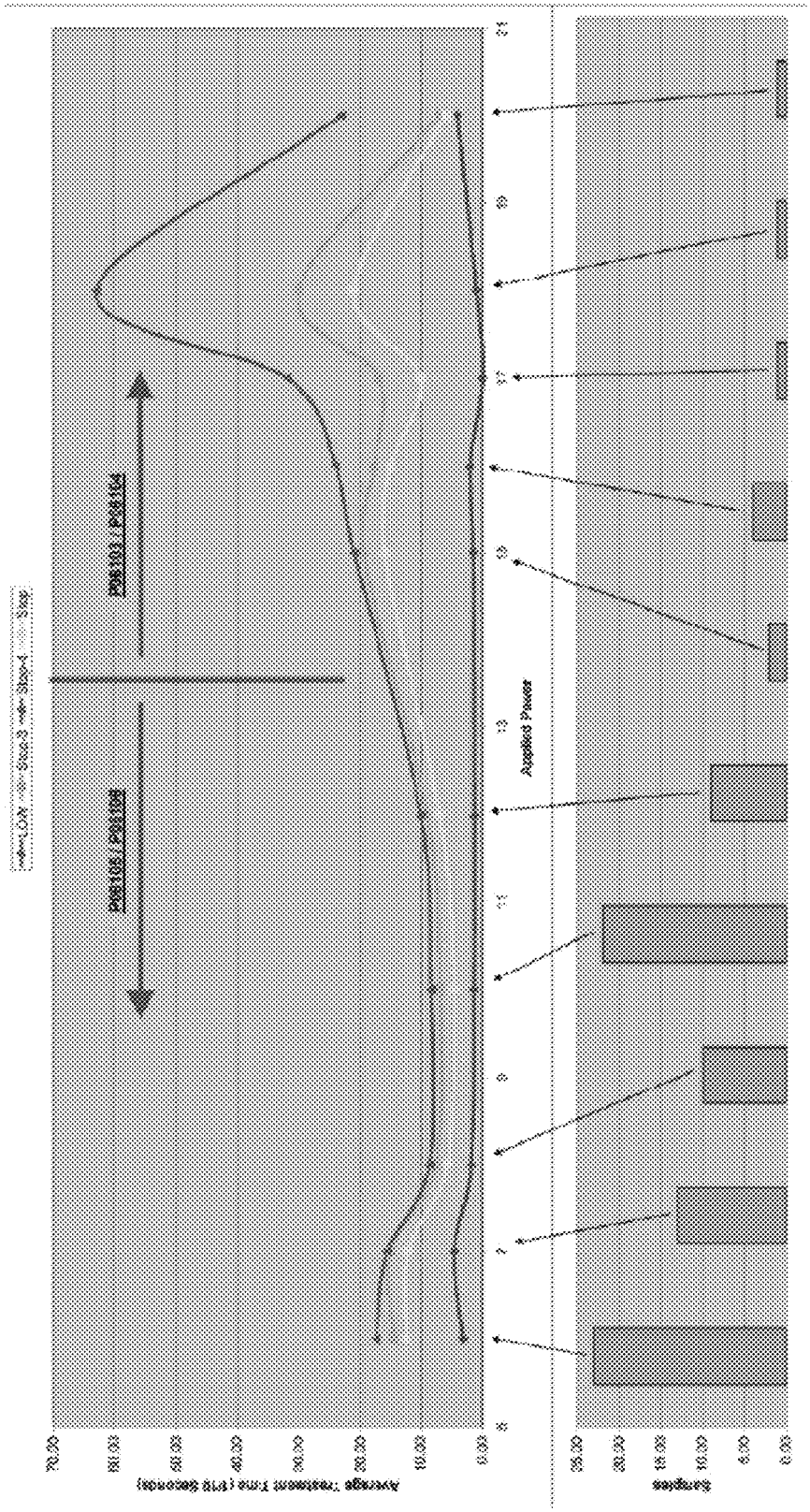

FIG. 44C

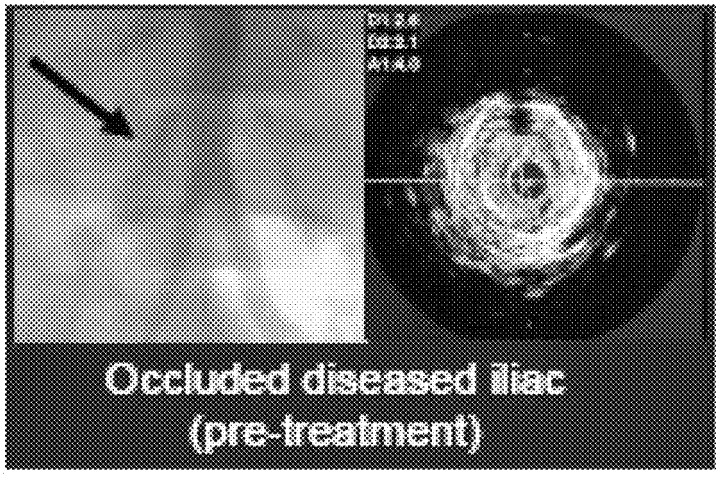

FIG. 45A

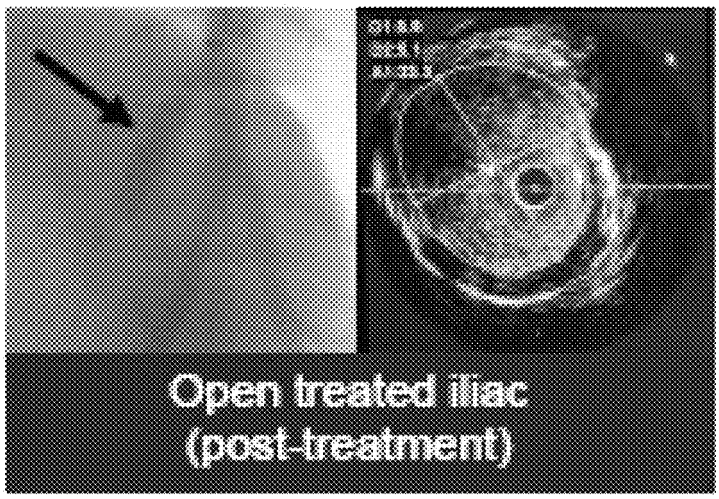

FIG. 45B

TUNED RF ENERGY AND ELECTRICAL TISSUE CHARACTERIZATION FOR SELECTIVE TREATMENT OF TARGET TISSUES

CROSS-REFERENCES TO RELATED APPLICATIONS

This application is a Continuation of U.S. patent application Ser. No. 11/975,651 filed on Oct. 18, 2007, which claims the benefit under 35 USC 119(e) of U.S. Provisional Application No. 60/852,787, filed on Oct. 18, 2006, and entitled "Tuned RF Energy And Electrical Tissue Characterization For Selective Treatment Of Target Tissues"; and U.S. Provisional Application No. 60/921,973, filed on Apr. 4, 2007, and entitled "Tuned RF Energy And Electrical Tissue Characterization For Selective Treatment Of Target Tissues".

This application is related to U.S. patent application Ser. No. 11/392,231, filed on Mar. 28, 2006; which claims the benefit under 35 USC 119(e) of U.S. Provisional Application No. 60/666,766, filed on Mar. 28, 2005, and entitled "Tuned RF Energy for Selective Treatment of Atheroma and Other Target Tissues and/or Structures"; and is related to U.S. patent application Ser. No. 10/938,138, filed on Sep. 10, 2004, and entitled "Selectable Eccentric Remodeling and/or Ablation of Atherosclerotic Material"; U.S. Provisional Application No. 60/976,733, filed on Oct. 1, 2007, and entitled "System for Inducing Desirable Temperature Effects on Body Tissue"; and U.S. Provisional Application No. 60/976,752, filed on Oct. 1, 2007, entitled "Inducing Desirable Temperature Effects On Body Tissue", the full disclosures of which are incorporated herein by reference.

BACKGROUND OF THE INVENTION

Field of the Invention

The present invention is generally related to medical devices, systems, and methods. In exemplary embodiments, the invention provides catheter-based diagnosis and/or treatment for luminal diseases, particularly for atherosclerotic plaque, vulnerable or "hot" plaque, and the like. The structures of the invention allow guided eccentric atherosclerotic material analysis, remodeling and/or removal, often using both electrical diagnostic signals and electrosurgical energy.

Physicians use catheters to gain access to and repair interior tissues of the body, particularly within the lumens of the body such as blood vessels. For example, balloon angioplasty and other catheters often are used to open arteries that have been narrowed due to atherosclerotic disease.

Balloon angioplasty is often effective at opening an occluded blood vessel, but the trauma associated with balloon dilation can impose significant injury, so that the benefits of balloon dilation may be limited in time. Stents are commonly used to extend the beneficial opening of the blood vessel.

Stenting, in conjunction with balloon dilation, is often the preferred treatment for atherosclerosis. In stenting, a collapsed metal framework is mounted on a balloon catheter which is introduced into the body. The stent is manipulated into the site of occlusion and expanded in place by the dilation of the underlying balloon. Stenting has gained widespread acceptance, and produces generally acceptable results in many cases. Along with treatment of blood vessels (particularly the coronary arteries), stents can also be used in treating many other tubular obstructions within the body, such as for treatment of reproductive, gastrointestinal, and pulmonary obstructions.

Restenosis or a subsequent narrowing of the body lumen after stenting has occurred in a significant number of cases. More recently, drug coated stents (such as Johnson and Johnson's Cypher™ stent, the associated drug comprising Sirolimus™) have demonstrated a markedly reduced restenosis rate, and others are developing and commercializing alternative drug eluting stents. In addition, work has also been initiated with systemic drug delivery (intravenous or oral) which may also improve the procedural angioplasty success rates.

While drug eluting stents appear to offer significant promise for treatment of atherosclerosis in many patients, there remain many cases where stents either cannot be used or present significant disadvantages. Generally, stenting leaves an implant in the body. Such implants can present risks, including mechanical fatigue, corrosion, and the like, particularly when removal of the implant is difficult and involves invasive surgery. Stenting may have additional disadvantages for treating diffuse artery disease, for treating bifurcations, for treating areas of the body susceptible to crush, and for treating arteries subject to torsion, elongation, and shortening.

A variety of modified restenosis treatments or restenosis-inhibiting occlusion treatment modalities have also been proposed, including intravascular radiation, cryogenic treatments, ultrasound energy, and the like, often in combination with balloon angioplasty and/or stenting. While these and different approaches show varying degrees of promise for decreasing the subsequent degradation in blood flow following angioplasty and stenting, the trauma initially imposed on the tissues by angioplasty remains problematic.

A number of alternatives to stenting and balloon angioplasty so as to open stenosed arteries have also been proposed. For example, a wide variety of atherectomy devices and techniques have been disclosed and attempted. Despite the disadvantages and limitations of angioplasty and stenting, atherectomy has not gained the widespread use and success rates of dilation-based approaches. More recently, still further disadvantages of dilation have come to light. These include the existence of vulnerable plaque, which can rupture and release materials that may cause myocardial infarction or heart attack.

In light of the above, it would be advantageous to provide new devices, systems, and methods for diagnosing, characterizing, remodeling, and/or removal of atherosclerotic material and occlusions of the lumens of the body, and particularly of the blood vessels. It would further be desirable to avoid significant cost or complexity while providing structures which could both characterize and remodel or remove plaques and other occlusive materials without having to resort to the trauma of dilation, and to allow the opening of blood vessels and other body lumens which are not suitable for stenting. It would also be helpful if diagnosing and treating systems could provide some feedback on the progress of treatment.

BRIEF SUMMARY OF THE INVENTION

The present invention generally provides improved devices, systems, and methods for treating diseased and other target tissues, optionally for treatment of diseases of body lumens. Embodiments of the invention may allow analysis and/or treatment of the materials along these body lumens, optionally allowing plaque and other lesions to be characterized using a variable frequency electrical power or signal source. By radially expanding an electrode array-supporting basket within (for example) a blood vessel, and by monitoring

electrical characteristics (and particularly frequency, impedance phase angle, and impedance magnitude) of circuits formed using selected electrodes of the array, plaque, fibrous vulnerable or "hot" plaques, healthy tissues, treated tissues, and/or the like along the blood vessel may be locally analyzed. Optionally, the same electrodes may be used to selectively (and often eccentrically) treat the tissues per the results of the analysis. Tissue signatures may be used to characterize and/or selectively treat tissues with a range of energy modalities, including RF energy, microwave energy, ultrasound energy, light energy, and/or the like.

Embodiments of the invention may employ electrical energy to selectively heat target tissues and/or other structures. For example, circuit frequency and phase angle may be selected to compensate for a phase angle of the target tissue, with the collateral tissues often having a significantly different characteristic phase angle at the selected frequency. More generally, the electrical energy waveforms, application cycles, potentials, delivery systems, and the like may be tailored to help direct therapeutic energy into atheroma and other disease tissues of the vasculature while inhibiting injury to collateral tissue structures. As the electrical characteristics of at least some diseased tissues (and particularly their impedances relative to those of surrounding tissues) may tend to urge known electrosurgical treatment energy into healthy adjacent tissues, such tailoring may improve the efficacy of luminal therapies and/or decrease collateral tissue damage. Exemplary treatment systems and methods for physical targeting (for example, axial and/or radial targeting of occlusive tissues from within a blood vessel) and/or frequency targeting may make use of disease localization information (for example, from intravascular imaging, impedance measurement, or the like) and may optionally employ cooling to protect at least some tissues along a luminal wall.

In a first aspect, the invention provides a method for treating a target tissue in a patient body. The method comprises energizing a circuit with a tissue characterizing energy. Included in the circuit are both the target tissue and a collateral tissue. The target tissue is characterized by measuring an impedance and a phase angle of the circuit while the circuit is energized with the characterization energy. An appropriate form of treatment energy is determined from the measured phase angle of the circuit. The circuit is energized with the treatment energy to treat the target tissue.

Characterization of the target tissue will often include measuring at least one phase angle and impedance magnitude at an associated frequency of the circuit. A number of different frequencies may be used, each frequency having an associated impedance magnitude and phase angle. The set of frequencies, magnitudes, and phase angles can be used to determine if the target tissue is included within the circuit.

The tissues included in the circuit will often be defined at least in part by positioning electrodes of a probe. Exemplary probes described herein may have a number of electrodes, and the energy may be driven in a bipolar manner between selected electrodes of the probe. The probe may also be moved to align the electrodes with the target tissue. Nonetheless, collateral tissues will often be included within the circuit. Hence, driving standard bipolar energy between the electrodes may injure the collateral tissues included within the circuit. In fact, as standard RF energy may tend to (in some cases) preferentially heat the collateral tissues to a greater extent than the target tissues, substantial injury or even necrosis of a significant portion of collateral tissue may result from such standard RF treatments.

So as to enhance the efficacy of RF treatment while inhibiting injury to the collateral tissues included in the circuit, the treatment energy applied to the circuit may have a treatment phase angle which compensates for the phase angle of the target tissue. The phase angle of the treatment energy may be determined based on the measured phase angle of the circuit, and/or on a characteristic phase angle of the target tissue. As both the target tissue and the collateral tissue have impedance magnitudes and phase angles which vary with the frequency of the circuit, and as the energy absorbed by these two different tissues may vary with their phase angles, the treatment energy may be selected so that it has have a frequency at which the target tissue phase angle differs significantly from the collateral tissue phase angle. In other words, the treatment frequency may be selected to, for example, maximize the difference between the phase angle of the target tissue and the phase angle of the treatment tissue. While maximizing the phase angle difference may be beneficial, alternative frequency selecting criteria may also be employed, such as selecting a frequency at which the characteristic phase angles of the target and collateral tissues differ by an amount above a threshold so as to impart sufficient differential heating.

In some embodiments, the target tissue energy may heat the target tissue by a significant multiple of the heating of the collateral tissue. For example, the target tissue may be heated by over 1.5 times the heating of the collateral tissue, in some cases by three times the heating of the collateral tissue. In some embodiments, the target tissue treatment energy may heat the target tissue to a treatment temperature that is at least 2° C. greater than a treatment temperature of the collateral tissue. This may, for example, allow the collateral tissue to remain viable while the target tissue is injured sufficiently for passivation, ablation, or to otherwise render it benign. In some cases, particularly when standard RF energy would tend to heat the collateral tissue to a greater extent than the target tissue, the selected phase angle and frequency may instead cause the target tissue to be raised to a greater temperature than that of the collateral tissue during treatment, or may even simply allow the collateral tissue to be heated to a lesser extent than it would have to be to achieve the same target tissue temperature using standard RF energy.

In another aspect, the invention provides a system for treating a target tissue in a patient body. The system comprises a probe having an electrode for aligning with the target tissue of the patient body. An RF energy source is couplable to the probe. The RF source has a first mode and a second mode. The RF source in the first mode is configured to apply a tissue characterizing energy. The probe, the RF source, the target tissue, and a collateral tissue are included in a circuit when the probe is coupled to the RF source and the electrode is aligned with the target tissue. A processor is coupled to the RF source, and is configured to characterize the tissue by measuring a phase angle of the circuit while the circuit is energized with the characterization energy. The processor is also configured to determine an appropriate treatment energy from the measured phase angle of the circuit for use in the second mode of the RF source. This heats the target tissue and may impede injury to the collateral tissue.

The RF energy source may include separate circuits for generating the characterization energy and the treatment energy, with the source switching between the associated circuits when changing between the first and second modes. In other embodiments, the source may make use of a single hardware system for generating both the characterization energy and the treatment energy.

In a related aspect, the invention provides a catheter system for remodeling and/or reduction of material of or adjacent to a body lumen of a patient. The system comprises an elongate flexible catheter body having a proximal end and a distal end

with an axis therebetween. At least one energy delivery surface is disposed near the distal end. A power source is electrically coupled to the energy delivery surface(s). The power source energizes the energy delivery surface(s) with an electrical energy form that helps the energy heat the material and inhibits collateral tissue damage.

In another aspect, the invention provides a method for analyzing a vessel wall of a blood vessel. The method comprises engaging the vessel wall with an electrode of a probe, and energizing the electrode with a variable frequency power source. A frequency of the power source is varied, and a target plaque of the vessel wall is characterized by monitoring a frequency-dependent characteristic of an electrical circuit. The electrical circuit comprises the power source, the electrode, and the engaged vessel wall.

Optionally, the probe expands radially within the blood vessel so as to engage a plurality of electrodes against the vessel wall. The electrodes of the expanded probe generally define a circumferentially distributed electrode array, and the electrodes of the array can be supported by associated struts of the probe. The struts may expand resiliently and independently within the blood vessel so as to couple the array to the vessel wall within non-circular lumens. An eccentric subset of the array (optionally a single electrode or an adjacent pair of electrodes) adjacent the target plaque may be energized to characterize tissues locally, and/or to eccentrically remodel the characterized target plaque using a remodeling electrical potential. Feedback on the remodeling may be obtained by monitoring the characteristic of the electrical circuit while applying an appropriate variable-frequency signal, either during remodeling or by halting remodeling at least temporarily.

In exemplary embodiments, the characterized target plaque may comprise a vulnerable plaque, and the remodeling may be halted in response to the electrical characteristics of the circuit. For example, the remodeling may be halted in response to a change in a tissue signature signal (such as an impedance phase angle and magnitude at a selected frequency or range of frequencies), particularly when the change is associated with heating of lipids of the vulnerable plaque to 85° C. or more. More generally, the target plaque can be characterized using tissue signature and/or tissue signature profiles, with the signature profiles comprising curves or sets of data representing a plurality of tissue signature measurements at different frequencies throughout a frequency range. The target plaque may be characterized by comparison of a measured tissue signature profile to at least one other tissue signature profile, and may allow identification of the measured signature profile as being associated with at least one of healthy tissue, calcified plaque, or vulnerable plaque, with exemplary embodiments able to identify at least two of these. Beneficial embodiments may allow differentiation between plaques and other tissues that have not been treated, have been partially treated, and been appropriately treated, optionally by checking changes of a subset of the tissue signature measurements of the signature profiles (such as at an appropriate frequency or the like).

Many embodiments will be suitable for characterizing a plurality of localized materials distributed axially and/or eccentrically about the blood vessel, and optionally for selectively treating the different characterized materials with different remodeling treatments using the electrodes. Tissue signature profiles may be normalized and/or benchmarked to a known tissue of the patient (such as a healthy tissue identified using intravascular ultrasound or other known techniques), and target plaques may be characterized using relative slopes of tissue signature profiles or offsets between tissue signature profiles (and preferably both). The frequency range of the profiles will often extend below 50 KHz, typically extending from below about 50 KHz to over 1 MHz, and in some embodiments extending from about 4 Hz to about 2 MHz.

In another aspect, the invention provides a system for analyzing a vessel wall of a blood vessel. The system comprises a vascular probe having a proximal end, a distal end, and an electrode disposed near the distal end for engaging the vessel wall. A variable frequency power source can be coupled to the electrode such that, when the electrode engages the vessel wall, an electrical circuit (including the power source, the electrode, and the engaged vessel wall) can be established. A processor is coupled with the variable frequency power source, the processor configured to characterize a target plaque of the vessel wall by monitoring a frequency-dependent characteristic of the electrical circuit.

BRIEF DESCRIPTION OF THE DRAWINGS

The patent or application file contains at least one drawing executed in color. Copies of this patent or patent application publication with color drawing(s) will be provided by the Office upon request and payment of the necessary fee.

FIG. **1**A illustrates diffuse atherosclerotic disease in which a substantial length of multiple blood vessels has limited effective diameters.

FIG. **1**B illustrates vulnerable plaque within a blood vessel.

FIG. **1**C illustrates the sharp bends or tortuosity of some blood vessels.

FIG. **1**D illustrates atherosclerotic disease at a bifurcation.

FIG. **1**E illustrates a lesion associated with atherosclerotic disease of the extremities.

FIG. **1**F is an illustration of a stent fracture or corrosion.

FIG. **1**G illustrates a dissection within a blood vessel.

FIG. **1**H illustrates a circumferential measurement of an artery wall around a healthy artery.

FIG. **1**I illustrates circumferential distribution of atheroma about a restenosed artery.

FIG. **2** schematically illustrates an atherosclerotic material catheter system according to the present invention.

FIG. **3** schematically illustrates a catheter system for remodeling atherosclerotic material, the system including the catheter of FIG. **2**.

FIG. **4** illustrates an expandable basket and an associated electrode array of the catheter system of FIG. **2**.

FIGS. **5** and **6** illustrate an exemplary basket structure having alternating axially offset electrodes in a circumferential array.

FIGS. **7**A-E illustrate an exemplary atherosclerotic material remodeling and/or removal method using the catheter system of FIG. **2**.

FIGS. **8**-**10** schematically illustrate controllers for selectively energizing electrodes in the system of FIG. **2**.

FIG. **11** illustrates an alternative controller for selectively energizing electrodes in the system of FIG. **2**.

FIGS. **12**A-**12**H illustrate an alternative basket structure formed with independent struts having a localized enhanced width for use as an electrode surface, along with components thereof.

FIG. **13** is a schematic cross sectional view showing the application of different power levels through different electrodes so as to eccentrically remodel atherosclerotic materials.

FIGS. **14**A-**14**E are cross sectional side views through a body lumen showing additional aspects of treatment methods and devices described herein.

FIGS. **14**F-**14**H are cross sectional views taken across a body lumen and treatment device to show additional aspects of the eccentric treatment methods and devices.

FIGS. **15**A and **15**B illustrate an eccentric treatment device and method in a gelatin artery model.

FIG. **16** is a perspective view of an exemplary catheter assembly.

FIG. **17**A illustrates physical targeting within vessel by longitudinal movement.

FIG. **17**B illustrates physical targeting within vessel by radial electrode activation.

FIG. **17**C illustrates physical targeting by activation of radial and longitudinal electrode combinations.

FIG. **18** illustrates electrical impedance versus frequency characteristic of diseased and non-diseased tissue.

FIG. **19** illustrates shielding of high impedance tissue from electrical current by surrounding lower impedance tissue.

FIG. **20** illustrates electrical impedance measurement utilizing multiple radial spaced electrodes.

FIG. **21** illustrates variations of multiple frequency therapy.

FIG. **22** illustrates use of physical tissue characteristics from external sources, combined with electrical impedance measurements to determine a desired or optimum energy setting.

FIG. **23** illustrates four electrode measurement system distributed across multiple electrodes to measure contact and tissue impedance.

FIG. **24** illustrates flooding of vessel with non-ionic fluid to direct energy to vessel wall and surrounding tissue, reducing losses in native fluid.

FIG. **25** illustrates one embodiment of a closed loop control system to automatically diagnose and treat lesions within a vessel utilizing tissue information from an external source such as IVUS.

FIG. **26**A illustrates the switching mechanism in an external control box.

FIG. **26**B illustrates the switching mechanism at the distal end of the catheter.

FIG. **26**C illustrates the switching mechanism at the proximal end of the catheter.

FIG. **27** illustrates selective treatment of plaque.

FIGS. **27**A-**27**C illustrate spectral correlations of tissues, as may be used to analyze or characterize plaques.

FIGS. **28**A-**28**D illustrate bench top remodeling of tissue using an animal fat model treated with an exemplary embodiment of the catheter system.

FIGS. **29**A and **29**B illustrate intravascular imaging and eccentric remodeling with an exemplary embodiment of the catheter system.

FIG. **30** is a simplified schematic illustrating components of the system of FIG. **2** that can be used for intraluminal tissue and other material analysis and characterization.

FIGS. **31**A-**31**J graphically illustrate relationships between phase angles and impedance in a frequency range as can be use to electrically analyze and characterize materials engaging and disposed between electrodes of the system of FIG. **2**.

FIG. **32** illustrate a variety of tissues for characterization and selective treatment by the system of FIG. **2**.

FIGS. **32**A-**32**C illustrate changes in a relationship between phase angle and impedance in a frequency range associated with treatment of a tissue, along with histological images of the tissue before and after treatment.

FIG. **33** schematically illustrates an exemplary embodiment of a system for characterizing a target tissue based on a frequency, impedance, and phase angle relationship, and for selectively treating the target tissue by applying a treatment potential that compensates for the phase angle of the target tissue.

FIGS. **33**A and **33**B schematically illustrate a cell of a target tissue and an associated electrical circuit diagram of that tissue, respectively.

FIGS. **34**A and **34**B schematically illustrate a region of target tissue cells within a collateral tissue and an associated circuit diagram in which the target tissue cells and collateral tissue cells are included in a circuit with a probe and power source within the system of FIG. **33**.

FIG. **35** is a flowchart schematically illustrating a method for characterizing a target tissue and selecting a form of electrical energy to enhance the treatment of the target tissue and inhibit injury to a collateral tissue using the system of FIG. **33**.

FIG. **36** shows 3 flex circuit structures which can each electrically couple a plurality of proximal electrical contacts with a plurality of electrode surfaces supported by an expandable balloon of a balloon catheter for use in embodiments of the invention, along with notations that can be used to understand an example of multiplexing of the electrodes.

FIGS. **37**A and **37**B show an exemplary balloon catheter supporting electrodes and an exemplary RF generator structure, respectively, for use in the systems and methods described herein.

FIGS. **38**A and **38**B show a summary of treatment data of a series of experiments described herein, and total number of treatments within dose ranges, respectively.

FIG. **39** shows effective treatment ranges of power and time identified using the experiments of FIG. **38**A.

FIGS. **40**A, **40**B, **41**, and **42** illustrate lesion sizes generated from the experiments.

FIGS. **42**A and **42**B illustrate histology slides showing embodiments of treatments used in the experiments.

FIG. **43** illustrates additional lesion size data obtained from the experiments.

FIGS. **44**A-**44**C illustrate reactance data obtained from the experiments, indicating that the imaginary portion of the circuit impedance can be used to determine when it is appropriate to terminate a treatment.

FIGS. **45**A and **45**B illustrate experimental test results, showing how an occluded vascular site (FIG. **45**A) was durably increased size.

DETAILED DESCRIPTION OF THE INVENTION

The present invention provides devices, systems, and methods to analyze and/or treat a luminal tissue. The invention will be particularly useful for characterizing and remodeling materials along a partially occluded artery in order to open the artery lumen and increase blood flow. Remodeling may involve the application of electrosurgical energy, typically in the form of RF and/or microwave electrical potentials to energy delivery surfaces such as electrodes, antennas, and the like. This energy will optionally be controlled so as to limit a temperature of target and/or collateral tissues, for example, limiting the heating of a fibrous cap of a vulnerable plaque or the intimal layer of an artery structure to a maximum temperature in a range from about 50 to about 60° Celsius. In many embodiments, the energy will be controlled to limit the maximum temperature of an outer layer or adventitia of the blood vessel to no more than about 63° Celsius. Limiting heating of a lipid-rich pool of a vulnerable plaque sufficiently to induce melting of the lipid pool while inhibiting heating of other tissues (such as an intimal layer or fibrous cap) to less than a temperature in a range from about 50 to

about 60° Celsius may inhibit an immune response that might otherwise lead to restenosis, or the like. Many embodiments may apply sufficient heat energy to heat the lipids to about 85° Celsius or more while inhibiting collateral damage through selective application of heating energy. Relatively mild heating energies may be sufficient to denature and shrink atherosclerotic material during treatment, immediately after treatment, and/or more than one hour, more than one day, more than one week, or even more than one month after the treatment through a healing response of the tissue to the treatment so as to provide a bigger vessel lumen and improved blood flow.

In some embodiments, remodeling of the atherosclerotic plaque may comprise the use of higher energies to ablate and remove occlusive material from within body lumens, and particularly to remove atherosclerotic material from a blood vessel in order to improve blood flow. Ablation debris may be generated by such ablation, and the ablation debris may be thrombolitic or non-thrombolitic. Where thrombolitic debris is generated by ablation, that debris may be restrained, captured, and/or evacuated from the treatment site. Non-thrombolitic debris produced by ablation may not have to be restrained and/or evacuated from the vessel. The analysis and/or treatment region of the body lumen may be at least partially (or effectively fully) isolated for ablative or other remodeling treatments so as to allow the treatment environment to be modified (for example, by cooling the lumen and/or altering the electrical characteristics of fluid within the lumen using cooled fluid irrigation, non-isotonic fluid irrigation, and/or the like), to limit the release of any remodeling debris, and the like. The techniques of the invention will often provide electrosurgical capabilities, sensing or imaging suitable for measuring atheroma and/or vascular walls, and/or an emboli inhibitor. As atherosclerosis may be eccentric relative to an axis of the blood vessel over 50% of the time, possibly in as much as (or even more than) 75% of cases, the devices and methods of the present invention will often be particularly well suited for directing treatment eccentrically, often in response to circumferential atherosclerotic material detecting or imaging. While the methods and devices described herein allow such eccentric treatments, the devices can also be used for treatment of radially symmetric atherosclerosis by selectively directing energy in a radially symmetric pattern about an axis of the catheter or the like.

Hence, remodeling of atherosclerotic materials may comprise ablation, removal, shrinkage, melting, and the like of atherosclerotic and other plaques. Optionally, atherosclerotic material within the layers of an artery may be denatured so as to improve blood flow, so that debris will not necessarily be generated. Similarly, atherosclerotic materials within the arterial layers may be melted and/or treatment may involve a shrinking of atherosclerotic materials within the artery layers, again without necessarily generating treatment debris. The invention may also provide particular advantages for treatment of vulnerable plaques or blood vessels in which vulnerable plaque is a concern. Such vulnerable plaques may comprise eccentric lesions, and the present invention may be particularly well suited for identifying an orientation (as well as axial location) of the vulnerable plaque structure. The invention will also find applications for targeting the cap structure for mild heating (to induce thickening of the cap and make the plaque less vulnerable to rupture) and/or heating of the lipid-rich pool of the vulnerable plaque (so as to remodel, denature, melt, shrink, and/or redistribute the lipid-rich pool).

While the present invention may be used in combination with stenting and/or balloon dilation, the present invention is particularly well suited for increasing the open diameter of blood vessels in which stenting and balloon angioplasty are not a viable option. Potential applications include treatment of diffuse disease, in which atherosclerosis is spread along a significant length of an artery rather than being localized in one area. The invention may also provide advantages in treatment of vulnerable plaque or blood vessels in which vulnerable plaque is a concern, both by potentially identifying and avoiding treatment of the vulnerable plaque with selected eccentric and/or axial treatments separated from the vulnerable plaque, and by intentionally ablating and aspirating the cap and lipid-rich pool of the vulnerable plaque within a controlled environmental zone or region within the blood vessel lumen. The invention may also find advantageous use for treatment of tortuous, sharply-curved vessels, as no stent need be advanced into or expanded within the sharp bends of many blood vessel. Still further advantageous applications include treatment along bifurcations (where side branch blockage may be an issue) and in the peripheral extremities such as the legs, feet, and arms (where crushing and/or stent fracture failure may be problematic).

Embodiments of the invention may measure impedance of a circuit, and particularly of a circuit that includes an electrode coupled with a luminal wall or other tissue. Such impedance measurements of alternating current (AC) circuits will often include a measurement of both a real portion or magnitude of the impedance, and an imaginary portion or phase angle of the impedance. The impedance magnitude and phase angle generated at an appropriate frequency by a tissue coupled to the electrode may provide a tissue signature. To enhance the accuracy of tissue signature measurements, a plurality of individual measurements (often three or more) may be taken and averaged. By measuring tissue signatures at a plurality of different frequencies (for example, at about 100 different frequencies) within a frequency range, a signature profile for the tissue may be generated, with the signature profiles optionally comprising a curve or curve-fit of phase angles and magnitudes throughout a frequency range. In some embodiments, signal tissue signature measurements may be compared, and/or a smaller number (2-10 or 5-50) of such measurements may be included in a tissue signature profile. Tissue signature measurements may depend on the measurement conditions (including the configuration of the electrodes/tissue coupling), particularly, when the measurements are performed by transmitting bipolar tissue sensing current between two electrodes that are supported by a flexible and/or radially expandable support structure. Nonetheless, the relative tissue signatures and/or signature profiles (particularly the relative offsets between signature profiles, relative slopes of signature profiles, and the like) of different tissues of different patients will often be sufficiently consistent to allow the tissue signatures and signature profiles to be used to distinguish between healthy tissue, calcified plaque, fibrous plaque, lipid-rich plaques, untreated tissue, partially treated tissue, fully treated tissue, and the like.

Optionally, baseline measurements of tissues (which may be characterized via intravascular ultrasound, optical coherence tomography, or the like) may be taken to help differentiate adjacent tissues, as the tissue signatures and/or signature profiles may differ from person to person. Additionally, the tissue signatures and/or signature profile curves may be normalized to facilitate identification of the relevant slopes, offsets, and the like between different tissues. Once sufficient correlations have been established between tissue signatures (including impedance magnitude, phase angle, and frequency) and signature profiles of different tissues for a number of different patients and measurement conditions, tissue

characterization of at least some patients may be provided without having to resort to other baseline tissue characterization methodologies.

Diffuse disease and vulnerable plaque are illustrated in FIGS. **1**A and **1**B, respectively. FIG. **1**C illustrates vascular tortuosity. FIG. **1**D illustrates atherosclerotic material at a bifurcation, while FIG. **1**E illustrates a lesion which can result from atherosclerotic disease of the extremities.

FIG. **1**F illustrates a stent structural member fracture which may result from corrosion and/or fatigue. Stents may, for example, be designed for a ten-year implant life. As the population of stent recipients lives longer, it becomes increasingly likely that at least some of these stents will remain implanted for times longer than their designed life. As with any metal in a corrosive body environment, material degradation may occur. As the metal weakens from corrosion, the stent may fracture. As metal stents corrode, they may also generate foreign body reaction and byproducts which may irritate adjoining body tissue. Such scar tissue may, for example, result in eventual reclosure or restenosis of the artery.

Arterial dissection and restenosis may be understood with reference to FIGS. **1**G through **1**I. The artery comprises three layers, an endothelial layer, a medial layer, and an adventitial layer. During angioplasty, the inside layer may delaminate or detach partially from the wall so as to form a dissection as illustrated in FIG. **1**G. Such dissections divert and may obstruct blood flow. As can be understood by comparing FIGS. **1**H and **1**I, angioplasty is a relatively aggressive procedure which may injure the tissue of the blood vessel. In response to this injury, in response to the presence of a stent, and/or in the continuing progression of the original atherosclerotic disease, the opened artery may restenose or subsequently decrease in diameter as illustrated in FIG. **1**I. While drug eluting stents have been shown to reduce restenosis, the efficacy of these new structures several years after implantation has not be fully studied, and such drug eluting stents are not applicable in many blood vessels.

In general, the present invention provides a catheter which is relatively quick and easy to use by the physician. The catheter system of the present invention may allow arteries to be opened to at least 85% of their nominal or native artery diameter. In some embodiments, arteries may be opened to about 85%, and/or acute openings may be less than 85%. Rapid occlusive material removal may be effected using sufficient power to heat tissues locally to over about 100° C. so as to vaporize tissues, or more gentle remodeling may be employed.

The desired opening diameters may be achieved immediately after treatment by the catheter system in some embodiments. Alternatively, a milder ablation may be implemented, for example, providing to no more than a 50% native diameter when treatment is complete, but may still provide as much as 80 or even 85% or more native vessel open diameters after a subsequent healing process is complete, due to resorption of injured luminal tissues in a manner analogous to left ventricular ablation for arrhythmia and transurethral prostate treatments. Such embodiments may heat at least some occlusive tissue to a temperature in a range from about 55° C. to about 80° C. In some embodiments, occlusive tissues may be heated to a maximum temperature in a range between about 93 and 95° C. In other embodiments described herein, heating may be controlled so as to provide tissue temperatures in a range between about 50 and 60° C., with some embodiments benefiting from maximum tissue temperatures of about 63° C. Still further treatments may benefit from treatment temperatures of about 90° C. Advantageously, the catheter systems and methods of the invention may be used without balloon angioplasty, thereby avoiding dissections and potentially limiting restenosis. Optionally, treatments of tissues described herein may be repeated during a single surgical session, or after a month or more (even after a year or more) if appropriate to provide or maintain a desired opening of the lumen.

An exemplary catheter system **10** is schematically illustrated in FIGS. **2** and **3**. A remodeling and/or ablation catheter **12** includes a catheter body **14** having a proximal end **16** and a distal end **18**. Catheter body **14** is flexible and defines a catheter axis **20**, and includes an aspiration lumen **22** and an irrigation lumen **24** (see FIG. **3**). Still further lumens may be provided for a guidewire, imaging system, or the like as described below. Lumen **22** may be used for sensing and/or imaging of atheroma as well as aspiration.

Catheter **12** includes a radially expandable structure **26** adjacent distal end **18** and a housing **28** adjacent proximal end **16**. A distal tip **30** may include an integral tip valve to seal aspiration lumen **22** and allow passage of guidewires, imaging and/or restenosis inhibiting catheters, and the like.

Proximal housing **28** includes a first connector **32** in fluid communication with aspiration lumen **22**. Aspiration lumen **22** may have an aspiration port within expandable structure **26** so as to allow aspiration or aspiration of debris and gasses from within the expandable structure. Aspiration lumen **22** may also be used as an access lumen for guidewires, intravascular imaging catheters, and/or distally advancing intravascular radiation treatment catheters or restenosis inhibiting drugs. Hence, connector **32** may selectively accommodate an imaging catheter **34** having an atherosclerotic material detector **36** advancable within catheter body **14** adjacent to and/or beyond distal end **18**, the detector often comprising an intravascular ultrasound transducer, an optical coherent tomography sensor, an MRI antenna, or the like. An imaging connector **38** of imaging catheter **34** transmits imaging signals allowing circumferential measurement of atherosclerotic thicknesses about axis **20** to a display **39**.

Connector **32** also accommodates a restenosis inhibiting treatment catheter **40**, the treatment catheter here comprising an intravascular radiation catheter. Such a radiation catheter may include a radiation source **42** which can again be advanced distally within catheter body **14** to or beyond expandable structure **26**.

A second connector **44** of proximal housing **28** is in fluid communication with irrigation lumen **24** (see FIG. **4**). Second connector **44** may be coupled to an irrigation fluid source for introducing conductive or non-conductive liquids, gases, or the like, ideally for introducing gas or heparinized saline. Both first and second connectors **32**, **44** may optionally comprise a standard connector such as a Luer-Loc™ connector. In FIG. **3** connector **44** is schematically shown coupled to an aspiration vacuum source/infusion fluid source **45**.

Referring now to FIGS. **2**, **3**, and **4**, proximal housing **28** also accommodates an electrical connector **46**. Connector **46** includes a plurality of electrical connections, each electrically coupled to an electrode **50** via a dedicated conductor **52**. This allows a subset of electrodes **50** to be easily energized, the electrodes often being energized with bipolar or monopolar RF energy. Hence, electrical connector **46** will often be coupled to an RF generator via a controller **47**, with the controller allowing energy to be selectively directed to an eccentric portion of an engaged luminal wall. When monopolar RF energy is employed, patient ground may (for example) be provided by an external electrode or an electrode on catheter body **14**. A processor **49** may manipulate signals from imaging catheter **34** to generate an image on display **39**, may coordinate aspiration, irrigation, and/or treatment, and may automatically register the treatment with the image.

Processor **49** will typically comprise computer hardware and/or software, often including one or more programmable processor unit running machine readable program instructions or code for implementing some or all of one or more of the methods described herein. The code will often be embodied in a tangible media such as a memory (optionally a read only memory, a random access memory, a non-volatile memory, or the like) and/or a recording media (such as a floppy disk, a hard drive, a CD, a DVD, a memory stick, or the like). The code and/or associated data and signals may also be transmitted to or from the processor via a network connection (such as a wireless network, an Ethernet, an internet, an intranet, or the like), and some or all of the code may also be transmitted between components of catheter system **10** and within processor **49** via one or more bus, and appropriate standard or proprietary communications cards, connectors, cables, and the like will often be included in the processor. Processor **49** will often be configured to perform the calculations and signal transmission steps described herein at least in part by programming the processor with the software code, which may be written as a single program, a series of separate subroutines or related programs, or the like. The processor may comprise standard or proprietary digital and/or analog signal processing hardware, software, and/or firmware, and will typically have sufficient processing power to perform the calculations described herein during treatment of the patient, the processor optionally comprising a personal computer, a notebook computer, a tablet computer, a proprietary processing unit, or a combination thereof. Standard or proprietary input devices (such as a mouse, keyboard, touchscreen, joystick, etc.) and output devices (such as a printer, speakers, display, etc.) associated with modern computer systems may also be included, and processors having a plurality of processing units (or even separate computers) may be employed in a wide range of centralized or distributed data processing architectures.

Expandable structure **26** is illustrated in more detail in FIG. **4**. Expandable structure **26** may expand resiliently when released from within a restraining sheath, or may expand by pulling tip **30** toward distal end **18** (see FIG. **2**), optionally using a pullwire, an inner catheter body **58**, or the like. Expandable structure **26** here comprises a perforate structure or basket having a series of structural struts or elements **54** with opening or perforations **56** therebetween. Perforations **56** may be formed, for example, by cutting elongate slits in a flexible tube material, or the basket may be formed by braiding elongate wires or ribbons or the like.

Expandable structure **26** generally includes a proximal portion **60**, a distal portion **62**, and an intermediate portion **64** therebetween. Each electrode **50** is mounted on an associated basket element **54** along intermediate portion **64**, with an associated conductor **52** extending proximally from the electrode. Electrodes **50** are distributed circumferentially about axis **20** in an array, adjacent electrodes preferably being axially offset, ideally being staggered or alternating between proximal and distal axial locations. This allows bipolar energy to be directed between adjacent circumferential (axially offset) electrodes, between adjacent distal electrodes, between adjacent proximal electrodes, and the like.

In the exemplary embodiment, proximal and distal barriers **66**, **68** expand radially with proximal and distal portions **60**, **62** of expandable structure **26**. Barriers **66**, **68** inhibit any ablation debris and gases generated adjacent electrodes **50** from traveling within the body lumen beyond catheter **12**. Barriers **66**, **68** also allow an at least partially isolated ablation environment to be established within the body lumen, for example, by replacing blood within a blood vessel with a more advantageous fluid environment for limiting charring of the electrodes and the like. Alternative barriers may be provided instead of (or in combination with) barriers **66**, **68**, including one or more balloons axially offset from expandable member **26**, elastic lips, or the like. In other embodiments remodeling may be effected without generating significant thermolytic ablation debris and/or a desired treatment environment may be provided with localized irrigation and/or aspiration flows so that some systems may forego the use of barriers.

Exemplary expandable structure **26** is formed by cutting slots in a superelastic alloy tube such as a nickel titanium alloy or Nitinol™ tube. As can be understood with reference to FIG. **6**, expandable structures **54** may have circumferential widths **80** which are enhanced adjacent an electrode and/or electrode mounting location **82**. As can be seen in FIG. **5**, the localized enhancement of the width **80** adjacent electrode mounting pads **82** may be axially offset, as described above. The slots forming expandable members **54**, and hence the expandable members themselves may, for example, be 0.8 inches in length, with the expandable members having a circumferential width of about 0.25 inches. A variety of alternative expandable structures might also be used, with suitable expandable structures often being expandable from a low profile configuration for intravascular insertion and positioning to an expanded configuration in which radially outwardly oriented electrodes supported by the expandable structure can engage a surrounding vessel wall. Suitable alternative expandable structures may, for example, comprise compliant or non-compliant balloons similar to or modified from those used in any of a variety of balloon catheter structures. Exemplary balloon expandable structures may comprise a compliant balloon having helical folds to facilitate reconfiguring the balloon from a radially expanded, inflated configuration to a low profile configuration, particularly for removal after use.

The use of catheter system **10** for remodeling and/or removal of eccentric atheroma from within a blood vessel can be understood with reference to FIGS. **7**A through **7**E. As seen in FIG. **7**A, accessing of a treatment site will often involve advancing a guidewire GW within a blood vessel V at, and more often distally beyond a target region of atherosclerotic material AM. A wide variety of guidewires may be used. For accessing a vessel having a total occlusion, guidewire GW may comprise any commercially available guidewire suitable for crossing such a total occlusion, including the Safe-Cross™ RF system guidewire having forward-looking optical coherence reflectrometry and RF ablation. Where atherosclerotic material AM does not result in total occlusion of the lumen, such capabilities need not be provided in guidewire GW, although other advantageous features may be provided. For example, guidewire GW may include a distal balloon to hold the guidewire in place and further inhibit movement of ablation debris and the like. Guidewire GW may be positioned under fluoroscopic (or other) imaging.

Catheter **12** is advanced distally over guidewire GW and positioned adjacent to atherosclerotic material AM, often toward a distal portion of the occlusion as can be understood with reference to FIGS. **7**A and **7**B. Expandable structure **26** expands radially within the lumen of the blood vessel so that electrodes **50** radially engage atherosclerotic material AM. Expandable structure **26** may be expanded by, for example, pulling a pullwire extending through catheter body **14** to the coupled (directly or indirectly) to distal portion **62** of expandable body **26** (see FIG. **4**). Alternatively, an inner catheter body **58** may be moved proximally relative to outer catheter body **14**, with the inner catheter again being coupled to the distal portion of the expandable body. Still further alternatives

are possible, including withdrawing a sheath from around the expandable body and allowing the expandable body to flex radially outwardly. In at least some embodiments, whether actuated from the proximal end of catheter **12** or simply by releasing the expandable body, the structural members defining the expandable body may comprise elastic or superelastic materials treated to expand radially outwardly, such as by heat-setting a superelastic Nitinol™ metal, polyimide, or the like. In some embodiments, guidewire GW may be removed after the ablation catheter is positioned and/or the basket is expanded. As atherosclerotic material AM is distributed eccentrically about catheter **12**, some of electrodes **50** directly engage a luminal wall W, as can be understood with reference to FIGS. **7**B and **7**C.

Imaging catheter **34** is positioned within a lumen of catheter **12** so that detector **42** extends to adjacent atherosclerotic material AM. The imaging catheter operates within and/or through catheter **12** so as to measure a thickness of atherosclerotic material concentrically about catheter **12** as illustrated in FIG. **7**C with measurements often being taken at a plurality of axial locations so as to measure axial variation of the atherosclerotic material AM within the blood vessel, such measurements often progressing proximally. In many cases, atherosclerotic material AM will be distributed eccentrically within the vessel wall as shown in FIG. **7**C. It should be noted that no portion of the vessel wall need be completely uncovered by atherosclerotic material for the measurement distribution to indicate that the obstruction is eccentric, as a relatively thin layer of atheroma along one portion or side of the blood vessel may be much different in thickness than a very thick layer of atherosclerotic material on an opposite side of the blood vessel V. In some methods, remodeling and/or ablation of all atheroma along one side may result in electrode/vessel wall engagement only after treatment begins.

In some cases, imaging catheter **34** may allow identification and/or characterization of atherosclerotic materials, plaques, tissues, lesions, and the like from within a blood vessel. For example, imaging catheter **34** may determine an axial and/or circumferential localization of a target plaque for treatment. Where treatments are intended for atherosclerotic plaques so as to enhance blood flow through the lumen, the treatment may be tailored to provide short term and/or long term increases in lumen diameter and blood flow. Where catheter **34** identifies a circumferentially and/or axially localized vulnerable plaque, that vulnerable plaque may be targeted for a suitable treatment to inhibit deleterious release of thrombolitic materials, often by thickening a fibrous cap of the vulnerable plaque, making the plaque less vulnerable to rupture, decreasing a size or danger of release from a lipid-rich pool of the vulnerable plaque, or the like. Hence, catheter **34** may be used to provide information similar to that available through histology so as to indicate a composition of an atheroma (by identifying and location, for example, a fibrous cap, smooth muscle cells, a lipid pool, calcifications, and the like.) Intravascular ultrasound catheters may now be capable of such atheroma characterizations, and these characterizations may also be provided by optical coherence tomography intravascular catheters, intravascular MRI antennas, and other catheter-based imaging systems, or by non-invasive imaging modalities such as MRI systems, and the like.

Suitable imaging catheters for use in the present catheter system are commercially available from a wide variety of manufacturers. Suitable technology and/or catheters may, for example, be commercially available from SciMed Life Systems and Jomed-Volcano Therapeutics (providers of intravascular ultrasound catheters), Light Lab™ Imaging (developing and commercializing optical coherence tomography catheters for intravascular imaging), Medtronic CardioRhythm, and the like. Still further alternative technologies may be used, including ultra fast magnetic resonance imaging (MRI), electrical impedance atheroma depth measurements, optical coherence reflectrometry, and the like.

The systems, devices, and methods described herein may optionally make use of imaging techniques and/or atherosclerotic material detector devices which are at least in part (optionally being entirely) disposed outside of the body lumen, optionally being disposed outside of the patient body. Non-invasive imaging modalities which may be employed include X-ray or fluoroscopy systems, MRI systems, external ultrasound transducers, and the like. Optionally, external and/or intravascular atherosclerotic material detectors may also be used to provide temperature information. For example, a system having an MRI antenna may detect tissue temperatures such that a graphical indication of treatment penetration may be presented on the system display. Tissue temperature information may also be available from ultrasound and/or optical coherence tomography systems, and the temperature information may be used as feedback for directing ongoing treatments, for selecting tissues for treatment (for example, by identifying a hot or vulnerable plaque), and the like.

As with positioning of guidewire GW and advancement of catheter **12**, positioning of sensor **36** of imaging catheter **34** may be facilitated by fluoroscopic or other imaging modalities. Location of sensor **36** relative to expandable structure **26** may be facilitated by radiopaque markers of catheter **34** adjacent sensor **36**, and by the radiopaque structure (or corresponding radiopaque markers placed on or near) expandable structure **26**, and/or by the use of radiopaque electrodes.

By expanding expandable structure **26** within blood vessel V, optional proximal and distal barriers **66**, **68** (see FIG. **4**) may form an at least partially, and preferably a substantially isolated environment within the blood vessel. That environment may be adapted to improve subsequent remodeling and/or ablation by aspirating blood from a port of aspiration lumen **22** disposed between proximal and distal barriers **66**, **68**, and by irrigating the isolated environment with a desired fluid, as described above. When provided, aspiration and/or irrigation may be performed, optionally simultaneously, so as to generate a flow within the controlled environment for removal of any vaporization gases, ablation debris, and the like.

Referring now to FIGS. **7**C and **7**D, circumferential imaging often indicates that remodeling and/or ablation should be targeted to an eccentric portion or region R of the vessel wall W. To aid in registering the electrodes with the circumferential atheroma distribution, one strut of expandable structure **26** has an identifiable image, allowing the strut to serve as a rotational alignment key. Registering the electrodes may be achieved using intravascular imaging such as intravascular ultrasound (IVUS), optical coherence tomography ("OCT"), intravascular MRI, and/or the like, optionally using external imaging such as fluoroscopy, magnetic resonance imaging ("MRI"), or the like. Electronic registration may also be used. In response to this information, RF energy is directed to electrodes within region R. These actively energized electrodes define a subset of the overall array of electrodes, and selection of this subset of electrodes may be implemented using a controller as described hereinbelow.

The mechanisms of ablating atherosclerotic material within a blood vessel have been well described, including by Slager et al. in an article entitled, "*Vaporization of Atherosclerotic Plaque by Spark Erosion*" in *J. of Amer. Cardiol.* (June, 1985), on pp. 1382-6; and by Stephen M. Fry in "*Thermal and Disruptive Angioplasty: a Physician's Guide*;" Stra-

tegic Business Development, Inc., (1990) the full disclosures of which are incorporated herein by reference. Suitable vaporization methods and devices for adaptation and/or use in the present system may also be described in U.S. Pat. Nos. 5,098,431; 5,749,914; 5,454,809; 4,682,596; and 6,582,423, among other references. The full disclosure of each of these references is incorporated herein by reference.

Referring now to FIG. **7**E, as described above, it may not be necessary to completely remove all atheroma or atherosclerotic material from within the blood vessel. Providing an open lumen having an effective diameter of at least 80 or 85% of a nominal native lumen diameter may be sufficient. Remodeling treatments may provide acute effective open diameters in a range from about 30% to about 50%. In some embodiments, injury caused to the atherosclerotic material with the energized electrodes or other energy directing surfaces may result in subsequent resorption of the injured tissue lesions so as to provide further opening of the vessel after termination of treatment as part of the healing process.

To promote long term efficacy and inhibit restenosis of a treated region of blood vessel V, a restenosis inhibiting catheter **40** may be advanced through a lumen of catheter **12**, so that a radiation source **42** irradiates the treated region of the blood vessel. Suitable intravascular radiation catheters are commercially available from Novoste™, Guidant, Johnson & Johnson, and the like. Restenosis inhibiting drugs similar to those now being employed on drug eluting stents may also be advanced through a lumen of catheter **12**, optionally while the proximal and distal barriers again help to maintain a controlled environmental zone within the blood vessel, so that systemic drug delivery might be limited or avoided. In addition to known restenosis inhibiting drugs used on drug eluting stents, drugs which cause vasodilation might be employed. Known restenosis inhibiting drugs such as Rapamycin™ may also be used.

In some embodiments, expandable structure **26** may remain expanded against the vessel wall W and/or atherosclerotic material AM while catheter **12** moves within the blood vessel, the catheter often being drawn proximally during or between ablation treatments. Analogous movement of a radially expanded perforate basket is employed, for example, when measuring temperatures of blood vessels so as to detect vulnerable plaque in systems now being developed and/or commercialized by Volcano Therapeutics. Alternatively, the basket may be repeatedly contracted, axial movement of the catheter **12** employed to reposition the basket, with subsequent expansion of the basket at each of a plurality of treatment locations along atherosclerotic material AM. Repeated intravascular imaging or other atherosclerotic material thickness measurements circumferentially about catheter **12** may be employed, with the remodeling and/or ablation often being halted temporarily so as to allow an image to be acquired intermittently during an ablation procedure. A final image may be taken to verify remodeling and/or ablation has been successful.

Referring now to FIGS. **8** and **9**, alternative controllers **92***a*, **92***b* selectively energize electrodes of catheter **12** with RF power supplied from an RF generator **94**. A wide range of RF energy types may be employed, including burst of 500 Khz, different types of waveforms, and the like. In controller **92***a*, a simple dial **96** is turned to point to a desired electrode pair to be energized. A "key" electrode may be registered with the intravascular imaging system, either electronically or by providing an electrode, electrode support member, or attached marker which presents a distinct image on the intravascular imaging display. This simplifies selection of one or more eccentric electrode pair along atheroma. Advantageously, catheter **12** need not be rotated into a proper orientation to accurately remodel and/or ablate the desired eccentric atherosclerotic material. Controller **92***b* includes similar capabilities, but allows the operator to select multiple electrodes for driving bipolar RF energy therebetween, providing greater flexibility in allowing multiple electrodes to be simultaneously energized. Monopole control arrangements similar to those of FIGS. **8** and **9** may also be employed, as can be understood with reference to FIG. **10**. Patient grounding may be effected by a patient grounding plate, a ring electrode **2** to 5 cm proximal to basket **26**, or the like. Once again, no catheter rotation is required to orient an active side of the catheter adjacent to the targeted atheroma since various eccentric ablation orientations can be selected through the electrode selection controller.

An alternative controller **160** is illustrated in FIG. **11**. This controller allows an operator to choose, for each electrode, whether to keep that electrode inactive, electrically couple that electrode to a first pole (sometimes referred to as pole A) of an energy source (such as an RF generator or the like), or to electrically couple that electrode to a second pole or pole B of the energy source. This controller allows a wide range of energized electrode configurations, including pseudo-monopolar modes where all electrodes except one are connected to one pole of the energy source (pole A) and one electrode is connected to the other pole (pole B). Each electrode (in this embodiment, up to eight electrodes) is electrically coupled to a 3-way switch numbered from 1 to 8. A switch disposed in the middle position indicates the electrode is not coupled to either pole, while a switch pushed toward the plus sign indicates the associated electrode is coupled to a red RF connector with the controller. Similarly, a switch pushed toward the minus sign indicates the associated electrode is electrically coupled to a black RF connector of the control box.

An exemplary self-expandable basket is illustrated in FIGS. **12**A-**12**H. As can be understood from these drawings, electrodes may be fabricated as part of the struts **172** from which the basket is formed, for example, using a radially outwardly oriented surface of a localized widening **174** of each strut disposed in axially central portion of the strut, as can be seen in FIGS. **12**B and **12**E. Each arm may be formed from one piece of material, optionally comprising a Nitinol™ nickel-titanium shaped memory alloy, with the struts optionally being laser cut from a Nitinol™ tube. The electrode/basket may be, for example, coated with a high temperature polymer such as a polyimide. Electrodes **174** may be formed by inhibiting coating or removing coating from the desired portion of the associated strut **172** (as illustrated in FIG. **12**E) so that the electrode surface is exposed for contact with atherosclerotic material. At least the active electrode surfaces may be coated with a highly conductive metal such as gold, silver, an alloy of copper, or the like, and the coating will preferably maintain and withstand flexibility of the basket structure, with coating materials optionally being rolled or the like. By limiting the conductive electrode to a properly configured (often radially outwardly oriented), electrical coupling between the electrode and blood or other conductive fluids within the lumen may be limited. The struts may be separated from each other and structurally supported with an insulated material such as ultraviolet ("UV") cure or heat shrink sleeve, a polyethylene, Nylon™, or the like to form basket **170**.

Each strut **172** may be used to conduct energy between electrode surface **174** and an electrical conductor extending proximally from the strut toward a controller. Proximal pads for connecting such conductors are illustrated in FIG. **12**C, while distal structural pads **178** are illustrated in FIG. **12**D.

Adjacent electrodes **174** may be axially offset or staggered as can be seen in FIG. **12**F. Insulating coating along each strut **172** may be inhibited or removed from an inner surface of proximal pads **176** so as to facilitate connecting of an associated conductive wire, such as by spot welding or the like. Alternative polymer or non-polymer insulating materials may also be used, including parylene coatings, while alternative methods for attaching struts **172** to a catheter body may be employed, including adhesive bonding using insulating UV cure, embedding the pad structures in polyethylene, and the like.

Exemplary structures for fixing struts **172** of basket **170** to a catheter body **180** are illustrated in FIG. **12**G.

Referring now to FIGS. **12**F and **12**H, an alternative indicia providing a distinguishable image for rotationally registering selected electrodes **174** of basket **170** to images or other atherosclerotic material measurements can be understood. In this embodiment, an electrode **174***i* referenced as electrode **1** may have a radiopaque marker **182** disposed on the associated strut **172***i*. A strut **172***ii* supporting an associated second electrode **174***ii* may have two radiopaque markers **182** provide a circumferentially asymmetric count indicator allowing all electrodes to be referenced without ambiguity. The shape of electrodes **50** may vary, for example, electrodes **174** may be wider than other portions of struts **172** as illustrated in FIGS. **12**A-G.

Remodeling will often be performed using irrigation and/or aspiration flows. In many embodiments, an irrigation port directs fluid, such as a saline solution, from an irrigation lumen to an interior of the basket. An aspiration port may provide fluid communication between an aspiration lumen and an interior of the basket. One or both of these fluid flows may be driven continuously, or may alternatively pulsate before, during, and/or after treatment. In some embodiments, aspiration and/or irrigation flow may occur acutely or concurrently so as to circulate between the irrigation port and the aspiration port. Optionally, the flow may carry ablation debris to the aspiration port, where the debris may be evacuated through the aspiration lumen. There may be coordination between the irrigation system and the aspiration system such that the irrigation fluid may remain confined in an area closely adjacent the basket so as to inhibit embolization of ablation debris when the basket is expanded within the blood vessel. Such coordination, for example, may inhibit distal movement of ablation debris, and/or may obviate any need for a distal and/or proximal barrier or membrane. In some embodiments, the circulation of fluid between an irrigation port and an aspiration port may create an effectively bloodless environment adjacent the electrodes to facilitate remodeling and/or ablation, imaging of atherosclerotic tissue, and the like.

Referring now to FIG. **13**, controllers of the catheter systems described herein may allow distribution of differing power levels to differing pairs of electrodes. For example, in response to a circumferential distribution of atherosclerotic material AM such as that illustrated in FIG. **13**, a controller may direct 50 watts of energy to a first electrode **230**, 30 watts of energy to a pair of second electrodes **232** and only 10 watts of energy to a pair of third electrodes **234**. Other electrodes may have no energy directed thereto, as described above. In some embodiments, a differing power directed to the differing electrodes may be provided by controlling the duty cycle, for example, with 50 watts being provided by energizing one or more electrode for 50% of the time, 30 watts being provided by energizing an electrode 30% of the time, and the like.

Many imaging modalities (including intravascular ultrasound, optical coherence tomography, intravascular MRI, and the like) may be at least in part blocked or degraded by positioning the image detecting structure within a metallic structure such as a basket formed of Nitinol™. Hence, there may be advantages in producing alternative expandable structures such as baskets comprising plastics or a polymer. In light of the heat generated by the electrodes of the systems described herein, it may be advantageous for such polymer basket structures to comprise a high temperature polymer such as a polyimide. Alternative basket structures may comprise HDPE, PET, Nylon™, PEBAX™, and the like. The basket may be formed by cutting struts from a tube of the polymer material.

Exemplary treatment methods are illustrated in FIGS. **14**A-**14**H. In FIG. **14**A, the catheter system **260** includes a basket covering sheath **262** over an atherosclerotic material detecting and treating catheter **264** as described above. In this embodiment, outer basket sheath **262** radially restrains the basket **266**, which is biased to expand radially when released from the outer sheath, as illustrated in FIG. **14**B. In some embodiments, the basket may be expanded after the outer sleeve is retracted, such as by pulling pullwires, rotating one portion of the catheter relative to the other, or the like. Regardless, as the basket expands within the vessel V, electrodes **50** of the basket engage the surrounding vessel wall. An imaging transducer near basket **266** of an imaging catheter disposed in a lumen of the treatment catheter evaluates the vessel V, and the detection/treatment catheter system **264** is pulled proximally along the artery or vessel V.

When the imaging catheter detects atherosclerotic material AM as illustrated in FIG. **14**C, an appropriate subset (possibly including only a single electrode **50**) is activated to remodel the atherosclerotic material AM, as illustrated in FIG. **14**D, and the open vessel lumen size increases moderately during treatment. The catheter is pulled proximally to the next atheroma, which is again detected and treated. A cross section of the limited open lumen prior to treatment is schematically illustrated in FIG. **14**F, which also illustrates a saline flush or irrigation lumen **268** of the catheter **264**. Treatment energy and the moderate increase in the open lumen diameter of the vessel V are schematically illustrated in the cross section of FIG. **14**G. After a healing response gradually increases the open lumen diameter, the longer term open lumen results schematically illustrated in FIG. **14**H may then be provided.

Referring now to FIGS. **15**A and B, eccentric material removal in a gelatin artery model **270** are presented. Prior to the test, the artery model includes a consistent lumen **272** as seen in FIG. **15**A. A test eccentric treatment catheter **274** having an expandable basket supporting a circumferential array of electrodes is introduced into lumen **272**, with the expandable basket supporting the electrodes in engagement with the luminal wall. Selected electrodes of test catheter **274** were energized so as to eccentrically treat the gelatin artery model **274**, thereby effecting eccentric remodeling of the gelatin model, in this case by removing an eccentric volume **276** from along one side of lumen **272**. The orientation and amount of the material removed was controlled by selectively energizing electrodes of test catheter **274**.

Referring now to FIG. **16**, an exemplary catheter system **280** is illustrated. In this embodiment, catheter body **282** includes only a single lumen, which is large enough to accommodate an imaging catheter therein and also to be used as an irrigation lumen to bring irrigation fluid to irrigation ports **284**. The lumen may decrease in diameter distally of irrigation ports **284**, with the decreased diameter portion **286** fittingly receiving the imaging catheter within the lumen thereof so as to direct the irrigation fluid radially outward through the plurality of irrigation ports. This embodiment may be particu-

larly useful when remodeling atherosclerotic materials using the methods illustrated in FIGS. **14**A-**14**H, in which mild heating improves vessel size, optionally without requiring aspiration.

Catheter body **282** may include a braided shaft in which conductive wires (for example copper wires or beryllium-copper wires) are coated with a high temperature and/or high strength insulation material such as a layer of polyimide or the like. The braided wires may be sandwiched between layers of materials forming the shaft of catheter body **282**. The shaft may, for example, comprise a plurality of layers of polyethylene, an inner Teflon™ PTFE layer, an outer nylon layer, and the like.

The wires of shaft **282** may be braided so as to inhibit capacitive losses between wires when electrical currents run through them. Capacitive losses may be decreased when a wire that carries a current from an energy source to an electrode of the catheter system and a wire that carries a current from an electrode back to the energy source are not parallel, but at an angle, ideally being perpendicular. This may be achieved by braiding the wires with appropriate pitch or a number of peaks per inch. The basket structure **170** of catheter system **280** may be included, with the basket structure being described in more detail with reference to FIGS. **12**A-**12**H. Guide **286** may extend through basket **170** and may comprise a material transparent to the imaging catheter, optionally comprising HDPE, PET, or the like.

Still further alternatives are available. For example, another way to employ RF energy to remodel atherosclerotic material may be to energize a plurality of the adjacent electrodes with differing RF signals so as to employ the adjacent electrodes as a phase-array. A phase array can direct or steer an electromagnetic signal in a desired direction using constructive and destructive interferences between signals of adjacent elements of the array. By controlling phases of the adjacent signals, a phase array of electrodes may provide a focused and/or steerable RF signal.

Along with controlling steering and directionality, adjusting phases of adjacent RF electrodes may allow focusing of some or most of the RF energy at a desired depth D inside the atherosclerotic material while inhibiting RF energy delivery between the electrode surfaces and depth D using constructive and destructive interference between the signals. For example, such a system may be employed to preserve the cap of a plaque so as to reduce restenosis. Inhibiting heating of the cap while focusing energy toward an internal portion of the plaque may lower an immune response to heat that could otherwise lead to restenosis. Hence, inhibiting heating of the cap may reduce restenosis.

In general, the present invention may make use of highly elastic, expandable structures, particularly of expandable structures formed from structural members separated by perforations so as to define a basket. Such structures can conform to an artery diameter before, during, and/or after atherosclerotic material removal. This expandability allows for direct contact of the electrodes against atheroma, although the systems of the present invention may also make use of conductive fluid environments to complete an RF energy path, or conversely, use non-conductive fluid to enhance energy directed through tissue. Multiple electrodes can be distributed circumferentially around an intermediate portion of the expandable structure, and a subset of these electrodes can be activated to allow for eccentric tissue remodeling and/or ablation.

Atheroma may be identified and targeted by intravascular imaging, and these capabilities may be integrated into the remodeling and/or ablation catheter. Preferably, the intravascular imaging capabilities will be deployed in a separate catheter which can be advanced within, and removed from the ablation catheter. In general, this intravascular imaging capability allows the progress of the therapy to be monitored so that wall perforation can be avoided, while ideally reducing occlusion to no more than 15% of the overall native vessel diameter (either upon completion of the treatment or after subsequent tissue healing). The ablation catheter may further allow the use of localized radiation or drug delivery for anti-restenosis treatments. The ablation catheter may include a relatively large lumen allowing selective use of an intravascular imaging system, a radiation delivery or other treatment catheter, an aspiration of debris and vaporization gases, with these uses often being employed sequentially. A guidewire may make use of this or a separate lumen, and the guidewire may be removed to allow access for the restenosis and/or imaging catheters.

The devices, systems, and methods described above are well suited for application of electrical energy that is tailored to target tissues and materials along a body lumen.

The exemplary catheter devices and methods for their use described herein are intended for application in the lumen of vessels of the human anatomy. The anatomical structure into which the catheter is placed may be, for example, the esophagus, the oral cavity, the nasopharyngeal cavity, the auditory tube and tympanic cavity, the sinus of the brain, the arterial system, the venous system, the heart, the larynx, the trachea, the bronchus, the stomach, the duodenum, the ileum, the colon, the rectum, the bladder, the ureter, the ejaculatory duct, the vas deferens, the urethra, the uterine cavity, the vaginal canal, and the cervical canal.

As can be understood with reference to FIG. **17**A-**17**C, physical targeting of eccentric disease can be accomplished by positioning of electrodes by moving longitudinally in vessel until positioned in the vicinity of targeted tissue. As schematically illustrated in FIG. **17**A, axial movement of a distal end of probe in the form of a catheter **302** within a body lumen **304** allows different axial portions of the lumen wall to be targeted for analysis and treatment. An additional method to physically target eccentric disease in a radial manner is to apply bipolar energy selectively to specific electrodes **306** so as to direct energy through the targeted tissue, as can be understood with reference to FIG. **17**B. In some embodiments, radial and longitudinal physical targeting may be effected by selective activation of electrodes distributed both radially and longitudinally on an expandable body **310** of a catheter **308**, as illustrated in FIG. **17**C.

Frequency targeting of tissues is illustrated in FIGS. **18** and **19**. As graphically illustrated in FIG. **18**, different tissue types have different characteristic electrical impedances that cause the tissue to absorb energy of certain frequencies or frequency ranges more readily than others. By applying energy at the specific frequency or range of frequencies that the tissue is more conductive, energy penetrates the tissue more readily. In general, it has been shown that samples of diseased tissue exhibit higher impedance characteristics than samples of healthy tissue. As illustrated in FIG. **19**, in the case where a diseased area of tissue **312** is surrounded by relatively healthy tissue **314**, the healthy tissue is likely to shield the diseased tissue from electrical current flow due to the lower impedance of the healthy tissue. Hence, minimal (or less than the desired) current flow **318** may pass through diseased tissue **312**, and heavier current flow **320** may be seen in low impedance healthy tissue **314** when bipolar current is transmitted between electrodes **316**. Typically, the frequency ranges in which tissue impedance varies to a useful degree occur between 100 kilohertz and 10 Megahertz.

Frequency targeting seeks to deliver more energy to the diseased tissue by determining the frequency or range of frequencies at which the impedance of the diseased tissue is equal to or less than that of the healthy tissue, such as by operation at or above a threshold frequency **322** as illustrated in FIG. **18**. Energy delivered at the specified frequency or range of frequencies will cause more heat to be dissipated in the diseased tissue than energy delivered outside of those specific frequencies.

The use of impedance measurements to determine a location and/or state of tissue may be generally understood with reference to FIG. **20**. First, impedance measurements utilizing an array of radially spaced electrodes **330** within lumen **332** can be used to analyze diseased tissue **334**. Impedance measurements between the five electrodes of the array, and particularly impedance measurements between pairs of adjacent electrodes (and/or between pairs of separated electrodes), may differ when the current path passes through diseased tissue **334**, and when it passes through healthy tissues of the luminal wall. Hence, impedance measurements between the electrodes on either side of diseased tissue **334** may indicate a lesion, while measurements between other pairs of adjacent electrodes indicate healthy tissue. The impedance characterizes the molecular state of a tissue. The state of a tissue can be affected/changed by temperature: for instance, some of the constituent mater included in lipids may start denaturing at temperatures between about 40 C and 85 C. At least some fatty acids (such as lauric acids, palmitic lipids, arachidic acids, and/or lignoceric acids) may change phase with treatment temperatures of 45 C or less, 65 C or less, 75 C or less, 85 C or less, or the like, and may then turn into a new liquid state that can move through or between cells and/or be safely resorped. Lesions from which these fatty acids have been melted and from which the fatty acids have been removed or resorped may be as much as 90% more compact in volume than the pre-treatment lesions including their original constituent lipids.

If one knows the temperatures of state change for a tissue, and the impedance of the different states of the tissue, then by measuring the tissue impedance, it is possible to detect a state change, and or to estimate what the temperature is, thereby allowing one to monitor the progress of the therapy. E.g.: if impedance of a lipid was 100 Ohms, and an impedance of a particular melted fatty acid was 90 Ohms (here using hypothetical values), and knowing that this particular constituent of lipids changes phase from within the fatty solid to a melted fatty acid at around 85 C, then detecting a change in impedance form 100 Ohms to 90 Ohms indicates that the lipid turned into liquid fatty acids and therefore that the temperature should be around 85 C. Analysis of diseased luminal tissues may use specific frequencies to verify a type and condition of tissue based on electrical impedance measurement. Normal use will include the discovery and characterization of diseased tissue using intraluminal ultrasound or other methods. Measurement of tissue electrical impedances over radially spaced electrodes will allow for verification of the existence of diseased tissue and knowledge of the location of the electrodes relative to specific tissue.

Multiple Frequency Therapies and signals are schematically illustrated in FIG. **21**. Therapy can consist of the application of electrical energy at a single frequency or at multiple frequencies. Depending on the composition of the target tissue and surrounding tissue, the optimum treatment may consist of a single frequency to target a single tissue type, multiple frequencies to target multiple tissue types, or multiple frequencies applied to a single tissue type. Multiple bursts of the same frequency **336**, varying frequencies, such as a continuous burst of varying frequency **338**, bursts of multiple frequencies **340**, and multiple frequencies superimposed (optionally in bursts **342**) may be employed.

Multiple frequencies can be applied in any sequence from any combination of electrodes in contact with the target tissue or surrounding tissue. Multiple frequencies can be applied as discrete frequencies or can be applied as a frequency sweep across a range in a linear, logarithmic, or other manner.

An energy Control arrangement is schematically illustrated in FIG. **22**. In general, impedance and physical tissue characteristics may be utilized to set the output or treatment parameters. Geometry and tissue type may be determined as described herein using IVUS or other similar detector techniques. Electrode impedance measurements from multiple electrodes may be taken. An algorithm of the system processor may choose a correct initial dosage, and initial settings and/or range output.

Regarding setting up the correct initial dosage, the shape and type of diseased tissue to be treated is generally diagnosed and characterized by ultrasonic, optical, or other types of intraluminal sensing devices. Using the multi-electrode approach, electrical impedance measurements can be used to understand the electrical characteristics of atherosclerotic tissue of varying geometries and types previously diagnosed. Using that data, the initial therapy dosage setting can be optimized.

Regarding controlling the dosage, the electrical impedance characteristics of tissues vary due to temperature variations and the molecular state of a tissue. Dynamic measurement of electrical impedance of the tissue during application of energy can be used to monitor the changes in the tissue and the progress of the therapy. A four electrode implementation of the electrode system would allow for measurement of the electrical impedance of the electrode to tissue interface and therefore, measurement of the change in temperature of the tissue at the contact surface and that of the contact tissue.

Regarding determination of proper dosage during therapy, the pattern of energy delivery can be a single pulse or multiple pulses of varying duration separated by resting periods of varying duration. The measurement of electrical impedance of the tissue and of the electrode to tissue interface during energy delivery and between energy pulses can be used to determine the optimum durations of energy delivery and resting periods. Pre-treatment bursts of RF energy can be applied to condition the target tissue. Conditioning may be utilized to activate Heat-Shock Proteins (HSPs) in healthy tissue prior to treatment to get better protection of healthy tissue. Post-treatment bursts of RF energy can be applied to control the cool down time of the tissue. Interim treatment bursts of RF energy can be applied to control the temperature of the target and surrounding tissue between multiple therapy bursts. Energy can be delivered in any combination of amplitude and frequency from any combination of electrodes.

Impedance measurement on multiple electrodes can also be employed. When a multi electrode design is used it is likely that some of the electrodes will be in contact with the lumen wall and others will be suspended in the blood or other existing fluid or thrombus, or existing stents, or foreign materials of the like. The measurement of impedance at various radial locations allows the determination of which electrodes are in contact with the lumen wall and which ones are in contact with fluid such a blood. This contact determination can be used in combination with an intraluminal viewing device such as ultrasound to determine the physical orientation of electrodes.

Utilizing the impedance measurements between multiple electrodes, the determination of the contact status of each

electrode with tissue or blood can be utilized to determine if the electrode carrying mechanism (catheter) is in the proper location for therapy. Impedance measurements between multiple electrodes can be used to determine contact quality of electrodes to tissue. Poor contact quality can cause excessive or unwanted localized heating or can otherwise prevent optimum treatment. Determination of contact quality can be utilized to minimize this type of problem.

In some situations the choice of electrode may be determined by a combination of position and quality of contact. Impedance measurements between multiple electrodes can be utilized to better understand which electrodes are in better contact or a better position to treat a specific area or lesion.

In some situations the determination of energy level and frequency to be applied to the target can be based on quality of contact. Impedance measurements between multiple electrodes can be utilized to determine the optimum energy level and frequency.

In some situations energy may be applied to a single pair of electrodes, between multiple pairs of electrodes, or from a single electrode to multiple electrodes, or any combination thereof. Impedance measurements between multiple electrodes can be utilized to determine the optimum pattern.

Different embodiments may employ impedance measurement using two vs four electrodes, as can be understood with reference to FIG. **23**. Four electrode systems have been used for the measurement of electrical impedance in many applications. Four electrode systems are inherently more accurate than two electrode systems due to inaccuracies created in the two electrode systems by excessive contact impedance and electrical polarization reactions created in the contact area. In the four electrode system **344** energy is delivered to the target by two energy delivery electrodes **346** and an impedance measurement is taken between the other two high impedance electrodes **348** shown schematically in contact with the tissue **350** in the energy path. In this multiple electrode application any two electrodes can be utilized to deliver energy while any other two electrodes can be utilized for impedance measurement, thus forming a four electrode measurement system. A probe or catheter **352** may include a circumferential and/or longitudinally distributed array of electrodes may be used to contact the tissue, and any four electrodes of the catheter can be configured for energy delivery or impedance measurement. Thus, the electrode array can be utilized as a two or four electrode system.

In many applications it is helpful to know how much energy is being delivered to the target tissue and how much is being dissipated in the interface between the electrodes and tissue. By taking measurements as a two electrode system and then as a four electrode system the electrode to tissue interface can be characterized and that data can be utilized to determine how much energy is being dissipated in the electrode to tissue interface and how much is actually delivered to the target tissue.

Measurement of the electrical impedance in two or four electrode configurations can be performed statically utilizing small excitation signals or can be measured dynamically during the application of energy at the normal therapy levels. Using this technique, tissue electrical impedance can be measured dynamically during the application of energy to determine the state of the treated tissue and surrounding tissue.

Impedance measurement may optionally be performed in mono-polar configuration. It is possible to utilize multiple electrode systems in a mono-polar configuration where the return electrode is an electrically conductive pad applied to the external surface of the patient or the like. In this configuration impedance measurements can be performed between any one of the internally applied electrodes and the external return pad in the two electrode mode or any one of the internally applied electrodes can apply energy that flows to the external return pad while any other two internally applied electrodes is used to measure impedance.

Regarding temperature measurements, impedance measurements taken prior to therapy can be utilized to calculate a normalized value to be used in further calculations to determine the change in temperature from that initial value. Dynamic monitoring of the electrical impedance of target and surrounding tissue during therapy can be utilized to calculate the change in temperature of tissue. In some embodiments, dynamic monitoring or the electrical impedance of interface between electrodes and tissue can be utilized to prevent tissue charring or coagulation of blood at the interface.

Temperature change during therapy can be utilized to determine the effectiveness of energy delivery settings and to determine the condition of the tissue being treated.

Temperature measurement can be performed by intraluminal ultrasound or other mechanism and verified by data derived from impedance measurements.

Use of the systems described herein with ionic and non-ionic fluid can be understood with reference to FIG. **24**. When electrical current flows in an ionic fluid such as blood filling a lumen **356**, at least a portion of the current may pass through the blood when electrodes **358** are energized. Even when electrodes on either side of a target tissue **360**, heating of the target tissue may be reduced by the current flow within the blood in area **354**.

When used in a fluid filled lumen such as an artery, this device can be used in combination with a non-ionic fluid flooding the area **362** to displace or partially displace the native fluid to modify the conductivity of the environment around the electrodes. This action can be desirable in order to direct the energy, in form of electrical current **364**, into lumen walls instead of through the native fluid, thereby delivering energy to the tissue of the surrounding walls with minimal dissipation into the fluid filling the lumen.

A second purpose of the non-ionic fluid or an ionic fluid may be to provide cooling to the electrodes and to the tissue on the surface and just below the surface of the lumen wall.

Electrical impedance measurements at the electrodes can be utilized to determine the conductivity of the surrounding fluid, thus measuring the concentration of non-ionic fluid in the native fluid. This data can be fed to the control system to allow for adjustment of ionic fluid concentration to optimize delivery of energy to the target tissue and minimize undesired effects to surrounding tissue.

Use of blood as contact interface is also an option. Blood is a conductive ionic fluid that may be used as an interface between electrodes and tissue to ensure a good electrode-tissue contact and low contact impedance.

Closed loop control can be understood with reference to FIG. **25**. Impedance measurements over frequency ranges and across multiple electrodes can be utilized to verify electrode location relative to tissue landmarks, optionally by correlation to companion intraluminal measurement devices such a IVUS prior to and during therapy.

Impedance measurements using a closed loop treatment controller **366** making use of hardware and/or software of the system processor may facilitate treatment control. Such control over frequency ranges and across multiple electrodes can be utilized to monitor and to verify physical changes such as tissue shrinkage or denaturing of tissue in the application area. This data can be utilized to verify physical changes observed by other intraluminal observation techniques such as ultrasound.

Data from impedance measurements **368** combined with inputs from intraluminal measurement devices **370** such as ultrasound can be used to determine electrode selection from a predetermined set of rules of a controller or processor module **372**. This type of control system could potentially be utilized in an automatic mode to diagnose and treat diseased intraluminal tissue.

Data about the condition of the tissue, optionally including temperature change, electrode to tissue interface impedance, tissue impedance, electrode to tissue or blood contact, and intraluminal geometry and tissue type from ultrasound or other sources, can be utilized by a controller as inputs to a closed loop control system **366**.

Implementation of electrode switching may employ any of a wide variety of selective energizing electrode circuits, switch types, switch locations, and the like, some of which are schematically illustrated in FIGS. **26**A-**26**C.

Electrode switches can be located in an external instrument or external control box **374**, so that one external connector point **376** is provided for each electrode of catheter of catheter **378**, with one wire per electrode **380** extending to, in and/or along the body of the catheter. Alternatively, electrode switch mechanisms **386**, **388** may be embedded in a catheter **382**, **384**, respectively, either near the proximal end of the catheter for external switching or near the distal end of the catheter for internal switching. A limited number (e.g., 4) wires **390** may run proximally of the switching mechanism, while one wire per electrode may extend distally of the switching mechanism. Connection of discrete electrodes to RF generator or impedance measuring device can be accomplished by either electromechanical or solid state means.

Switching mechanisms disposed at distal end of catheter may have advantages. If located on the catheter, the switching mechanism can be located at the distal end to decrease the number of wires in the body of the catheter or at the proximal end. In embodiments of switching mechanism located at distal end of catheter the external control circuit optionally communicates with the switching mechanism via the same wires used for impedance measurements.

Switching mechanism at proximal end or other location on catheter may also be employed. The switching mechanism can be located at proximal end or any other location on the catheter if it provides advantage in performance or cost.

Referring now to FIG. **27**, the catheter devices **418**, systems and methods described herein will often be used to treat plaques **422** having fibrous tissue **420**. Fibrous tissue **420** may be heated to a target tissue to a temperature in a range from about 90 to about 95 C, which may provide shrinkage of up to about 50%. Lipids **424** may be heated to target temperatures in a range from about 80-85 C, providing up to about 90% shrinkage. Damage to adventitial layer **426** may be inhibited or the layer protected by limiting heating to below about 62 C. These and other temperatures and shrinkage estimates can be determined by appropriate empirical testing or the like, from unpublished and/or published work, or form other sources. Referring to FIGS. **27**A-**27**C, spectral correlations to diseased tissue may allow tissue characterization using techniques such as those described in an article by Tjeerd J. Romer et al. entitled "Histopathology of Human Coronary Atherosclerosis by Quantifying Its Chemical Composition with Raman Spectroscopy," *Circulation* 97:878-885 (1998).

Referring now to FIGS. **28**A-**28**D, feasibility of tissue shrinkage may be seen in a bench top experiment using a catheter system such as those described herein. An animal fat tissue model **430** (shown before the treatment in FIG. **28**A) can be treated by manually holding the expandable structure and associated electrodes of the catheter **432** in contact with a surface of the tissue during treatment with tissue remodeling electrosurgical energy (see FIG. **28**B). After treatment, as seen in FIG. **28**C and the close up of FIG. **28**D, visible shrinkage of the tissue can be verified. Feasibility of the use of intravascular imaging with the methods and systems described herein can be verified by images of the six individual electrode-supporting struts **428** of the expandable structure of the catheter in FIG. **29**A, as well as by viewing an eccentric void **430** that is created using a benign guided reshaping energy delivery targeted so as to increase effective artery diameter for better blood flow, as seen in FIG. **29**B.

Referring now to FIG. **30**, advantageous embodiments may employ aspects of electrical tissue discrimination techniques and devices described in U.S. Pat. No. 6,760,616 to Hoey et al., entitled "Tissue Discrimination and Applications in Medical Procedures," the full disclosure of which is incorporated herein by reference. As more fully described in that reference, tissue identification system **510** includes a user readable output device **512**, a user input device **516**, a processor **520**, and a probe **522**. The processor **520** includes a central processing unit ("CPU") **514**, a Digital to Analog converter ("D/A"), and an Analog to Digital converter ("A/D") **518**. Processor **520** may be included in processor **49** (see FIGS. **2** and **3**), and probe **522** may comprise any of the catheter structures described herein, so that tissue identification system **510** may be embodied in system **10**.

Referring now to FIGS. **30** and **31**A, tissue identification system **510** may apply a sliding or variable frequency electrical signal by energizing the electrode with a variable frequency power source **524**. Power source **524**, the electrode of probe **522**, and the engaged tissue of patient P can thus generally be included in a circuit, and an electrical characteristic of the circuit can be measured at different frequencies. In exemplary embodiments, an impedance (both phase angle and magnitude) of the circuit are measured at a plurality of frequencies within a frequency range of about 4 KHz to about 2 MHz. For each frequency, a phase angle vs. magnitude datapoint may represent a tissue signature measurement, with a series of individual datapoints often being taken under similar conditions (for example, at a given frequency and without moving the electrodes) and averaged for enhanced accuracy. The tissue signature datapoints may be measure at a plurality of frequencies throughout a range of frequencies so as to generate phase angle vs. magnitude curves representing a tissue signature profile or correlation **530**, **532**, or **534**, which may be used to characterize the tissue of the circuit. The phase angle can refer, for example, to the angle between the voltage and current, and the frequencies at which the datapoints of the profiles may vary across the profiles.

The signals used to derive the tissue signature profiles **530**, **532**, **543** will often be driven between electrodes of the catheters described herein. Conveniently, the tissue included in the circuit may be controlled by selecting different electrode pairs for testing, with or without repositioning of the electrodes. There may be significant patient-to-patient differences (or even region to region differences within a patient) for individual tissue signature measurements, and these differences may, at least in part, be caused by the different configurations of the electrodes during testing, different distances between electrodes, and the like. Nonetheless, the relationships (and particularly the relative slopes of the profile correlations, the offsets between correlations, and the like will be sufficiently consistent to allow tissue characterization, particularly where a baseline tissue signature profile for the patient or tissue region is obtained using IVUS, OCT, or the like. Where a region of (for example) healthy tissue can be identified using IVUS and used to generate a baseline tissue

signature profile for the patient, other nearby tissue signature measurements or profiles can then be normalized to that baseline, compared to the baseline, and/or the like. From the offsets, the differences in slope, and the like, the tissue can be analyzed.

Referring now to FIGS. **31**A-**31**J, the relationships between tissue signature profile curves or correlations can be used to analyze and characterize the tissues engaged by the electrodes of the probe. For example, a correlation **530** associated with fibrous plaque (seen on the left side of the graph of FIG. **31**A) has both a slope and a magnitude that differs significantly from that of a calcified plaque **534** (seen in the right side of the plotted data) and from a correlation **532** associated with thrombus (generally between **530** and **534**). The offsets between the correlations here encompasses a difference in phase for a given impedance, a difference in impedance for a given phase, or the like. As can be understood with reference to the graphical plots, the relationships between correlations may be determined by fitting curves to the data, by statistical analysis, by lookup tables, or the like. In exemplary embodiments, tissue signature measurements may be taken by (for example) a commercially available vector impedance meter such as a Hewlett-Packard Model No. 4193A, and the correlations may be captured using LabView™ Software and plotted or manipulated using Excel™ spreadsheet software from Microsoft, or the like. Once sufficient benchmarked data has been obtained and repeatability under different probe configurations has been established, electrical circuit measurements tissue characterization without benchmarking of each patient may avoid the expense of IVUS measurements.

Referring now to FIG. **31**B, along with characterizing different tissues, the relationships can also be used as feedback on treatments of luminal walls. A fibrous plaque correlation or profile before treatment (toward the right side of the plot) changes in magnitude during treatment to a post-treatment correlation or profile (toward the left side). The treatment here comprised 2 W of electrosurgical energy for 2 seconds, showing that moderate remodeling or partial treatments can be monitored, verified, and/or controlled using the electrical characteristics of the circuit of tissue identification system **510**. Advantageously, once an appropriate frequency or range of frequencies has been determined, the entire tissue signature profile need not be generated for analysis of ongoing tissue treatments and/or characterization of tissues, as offsets can be readily identified. Such measurements may, for example, allow tissue temperatures to be determined, particularly where the temperature is a treatment temperature that alters an offset of the tissue signatures. The energy of the electrical signals used for tissue analysis will typically be less than the remodeling treatments. A similar plot is shown in FIGS. **31**C and **31**D, with the post-treatment correlation here being after treatment with 2 W for 9 seconds and 1 W for 9 seconds, respectively.

Referring now to FIG. **31**E, relationships between healthy tissue (toward the right) and fibrous plaques (toward the left) can be identified from their associated tissue signature profiles or correlations, which differ significantly in both slope and magnitude. FIG. **31**F shows relationships between correlations or profiles for fibrous tissue before treatment (left), fibrous tissue after treatment (right), and healthy tissue (center). FIGS. **31**G-**31**J illustrate additional plots of relationships between profiles or correlations associated with fibrous tissues and treated fibrous tissues.

Referring to FIG. **32** a severely diseased blood vessel with three basic categories of plaque can be seen: lipid rich (fatty) plaque, fibrous plaque, and calcified plaque or tissue. All may be present in one sample, and may also be present in the diseased tissue of (or adjacent to) one lesion, making the lesion hard to treat using conventional techniques. Through the tissue analysis techniques described herein, the correct prescription and dosage of energy can be targeted and delivered to effect a safe and appropriate (and often different) remodeling of the different tissue categories or types, at the appropriate locations of the constituent parts that make up each lesion.

Referring now to FIG. **32**A, this graph shows tissue signature measurements and tissue signature profile results obtained from a human aorta specimen, with these results for an engaged fibrous plaque before and after treatment. FIGS. **32**B and **32**C show histopathology slides of the tissue. The cracks visible on each slide may be artifacts of the mounting process. The nucleation or voids that show up in FIG. **32**C, however, may indicate a remodeling of the tissue itself.

Referring now to FIG. **33**, an exemplary system **602** makes use of any of the probes described above (or any of a variety of alternative probes having electrodes) to characterize and selectively treat target tissues. The system includes an RF energy source **604** coupled to a processor **606**. RF source **604** may have a relatively low power tissue characterization RF generator **608** and a higher power tissue treatment RF generator **610**. Alternative embodiments may use the same circuitry for generating tissue characterization energy as for generating treatment energy, with the two treatment forms generally being applied in different modes.

Processor **606** of system **602** will often characterize tissues using a tissue signature profile correlation, as generally described above. In addition, processor **606** will determine an appropriate treatment energy form to selectively treat the target tissue or enhance the treatment of the target (tissue while limiting or inhibiting collateral tissue) damage. To provide these benefits, processor **606** will generally determine a frequency for the RF treatment energy and/or a phase of the RF treatment energy.

Selection of appropriate energy forms for heating of the target tissue may be generally understood with reference to FIGS. **33**A and B and **34**A and B. Referring first to FIGS. **33**A and B, a target cell TC through which an RF current **612** passes may be represented by an electrical circuit model **614**, as illustrated in FIG. **33**B. Target cell model **614** includes a pair of capacitors (roughly corresponding with the cell walls) between which there is an inductor and/or resistor. Model **614** may help explain the characteristic relationship between frequency, impedance, and phase angle of a tissue, as cells of the same type may have generally similar individual electric circuit models with generally similar characteristics. Cells of different types may be modeled using the same types of electrical components, but the different cell types may have cellular walls with generally greater (or lesser) abilities to act as a capacitor, generally lower (or higher) resistances, and so on. Hence, while there may be significant variation among cells of the same type, the differences between different types of cells can be sufficient for the tissues to generate differing tissue signature profiles.

As illustrated in FIG. **34**B, were electrodes to be applied on either side of a single target cell TC, the individual cell's electrical characteristics may produce a signature profile having differing phase angles and impedances associated with differing frequencies. A frequency could be selected for applying energy to the cell, and based on the relationship between frequency and phase angle, the power applied to the cell could be adjusted in phase to enhance the efficiency of heating that particular cell. For example, if at a given frequency, target cell TC has a phase angle of −14°, applying

energy with a +14° phase angle could more effectively heat target cell TC than simply applying a standard zero phase angle RF energy at that frequency.

As can be understood with reference to FIGS. **34**A and **34**B, electrosurgical energy is typically applied to a number of cells simultaneously. In a given tissue structure, a three-dimensional volume of target cells TC may be disposed within a matrix of different collateral cells CC. A treatment current **612** may in part pass through both collateral cells CC and target cells TC in series, and may in part pass through these different cell types in parallel. Regardless, each individual cell included in a circuit **616** with a power source **618** and electrodes **620** may still be modeled as having similar simple electrical component models **614**. Hence, the target cells **614** included in circuit **616** will be more efficiently and/or effectively heated by RF energy at a given frequency if the phase angle of power source **618** is appropriate for the target cell signature. As collateral cells CC may have significantly different characteristic phase angles at that frequency, they may be heated to a significantly lower extent than the target cells TC.

The model of FIGS. **34**A and **34**B is a simplification. For example, along with energizing each of the individual cells with electrical RF energy, heat flow will occur from the hotter cells to the adjacent cooler cells. Additionally, the target cells may have differing specific heats, electrical characteristics, and the like which make selective heating of the target cells challenging. Nonetheless, by selecting the appropriate phase angle, heating of the target cells may be enhanced. Additionally, by selecting frequencies at which the phase angles of the target cells differ significantly from the characteristic phase angles of the collateral cells, the selective heating benefits may be enhanced. Hence, referring to FIG. **31**F, it may be advantageous to select a treatment frequency at which a collateral tissue signature profile (shown in green at the top of the chart) has a low phase angle while the tissue signature profile of a target fibrous tissue before treatment (shown in blue in the middle of the chart) has a high phase angle.

A variety of refinements may be included in the structure of system **602** and its use. Tissue characterization RF generator **608** may optionally comprise any of a wide variety of off the shelf variable frequency signal generators. Alternative proprietary variable frequency RF signal generators may also be used. Tissue treatment generator **610** will also typically comprise a variable frequency RF source, components and technology of which are well known and understood. The treatment RF generator source **610** may have a different or lower power than many existing variable frequency RF signal generators, so that a proprietary structure may be beneficial.

Processor **606** may be coupled to the circuits powered by the RF source(s) **604**, **608**, **610** by suitable sensors for monitoring the phase angle, magnitude, and the like to facilitate tissue type characterization. Processor **606** will also often transmit command signals to the RF source(s) so as to effect tissue characterization, to effect tissue treatment, to provide a user interface with the user of system **602**, to integrate data regarding tissue types and treatment from system **602** with information from other tissue characterization and/or imaging modalities, and the like. As noted above, the target cell tissue signature profile may be altered during treatment. Hence, the processor **606** may intermittently interrupt tissue treatment to characterize the target tissue and/or monitor treatment. Processor **606** may modify the treatment frequency and/or phase angle in response to measured or estimated changes in the target tissue signature profile caused by the treatment. Processor **606** may also, for example, select frequencies and/or phase angles that differ somewhat from the ideal values for treatment of the target tissues so as to further limit heating of collateral tissues, or may select a convenient frequency (such as those designated by the Federal Communication Commission) to limit interference with radio communication systems, even though alternative frequencies may provide more selective heating of the target tissue and/or more limited injury to a collateral tissue. To limit interference with radio communication systems in general, some or all of the components of the system **602** may be shielded, such as by using the system in a room or enclosure which limits the escape of RF signals.

Referring now to FIG. **35**, an exemplary method **630** is shown schematically as starting with positioning of a probe **632**. Prior to, during, and/or after positioning of the probe for the first time, the probe may be introduced into the body, electrodes of the probe may be deployed, and/or the like, as can generally be understood with the treatment methodology described above.

An electrical circuit is established **634**. For probes having a plurality of alternative electrode pairs, the electrical circuit may be established by selecting one or more electrodes of the pair. Characterization and treatment will often be facilitated by positioning the electrodes near a target tissue and driving bipolar electrical alternating energy between the selected electrodes. Alternate embodiments may use monopolar probes.

A tissue characterization RF power **636** may be applied to the circuit, and an impedance amplitude and phase angle measured or determined **638**. The measured amplitude and phase angle may be recorded and associated with a circuit frequency, and additional measurements taken until the desired data have been recorded.

Once the desired characterizing information has been obtained, the tissue can be characterized **640**. If the characterized tissue is targeted for treatment **642**, the appropriate treatment energy may be determined **646**. If the characterized tissue is not targeted for treatment, an alternative pair of electrodes of the probe may be selected for tissue characterization, and/or a probe may be repositioned to a new location.

Determination of the treatment energy **646** will often comprise selecting a frequency and associated phase angle which compensates for the characteristic and/or measured phase angle of the target tissue. For example, if the target tissue has a characteristic or measured phase angle of −16° at a suitable treatment frequency, and if collateral tissues have phase angles of about −3° at that frequency, the determined treatment energy may have the frequency and a phase angle of +16° so that when electrical energy is converted to heat energy, the area under the superimposed voltage and current curves (when plotted on a magnitude vs. time graph) is enhanced or maximized.

The circuit is energized **648** so as to treat the tissue included within the circuit, often to heat the target tissue to a desired temperature and/or for a desired time so as to provide the desired therapeutic result. The system may determine whether treatment is complete by recharacterizing the tissue as described above, or based on dosimetry or the like. If the circuit treatment is complete **650**, additional electrode pairs may be characterized and/or treated, and/or the probe may be moved to a new position. Once the final probe position has been treated, the treatment method can be halted.

Referring now to FIG. **36**, an exemplary flex circuit panel **710** having flex circuits **712**, **714**, and **716** is shown. Each of the flex circuits include electrically conductive leads **718** that extend between proximal electrical contacts **720** and distal electrodes **722**. Leads **718** are supported by a flexible polymer substrate **724**, and the flex circuits may be used in catheter **12**

(see FIG. **33**), for example, by cutting the substrate around and/or between the electrical components of the circuit, mounting the electrodes to a radially expandable structure **26** (such as a basket or balloon), and extending leads **718** toward and/or along catheter body **14** for electrical coupling to processor **606** and RF source(s) **604**, **608**, and/or **610**. One or more flex circuits may be mounted to the expandable structure, with the electrodes of each flex circuit optionally providing a grouping or sub-array of electrodes for treating an associated portion or region of a target tissue. Alternative sub-arrays may be provided among electrodes of different flex circuits, may be defined by programmable logic of the processor, and/or may comprise any of a wide variety of alternative electrode circuit structures, with the sub-arrays often being employed for multiplexing or treating the region of target tissue with a plurality of differing electrical energy paths through the tissue.

Still referring to FIG. **36**, multiplexing between selected electrodes of an array or sub-array can be effected by selectively energizing electrode pairs, with the target tissue region for the sub-array being disposed between the electrodes of the pairs so that the energy passes therethrough. For example, a pair of electrodes selected from electrodes **1**, **2**, **3**, **4**, **5**, and **6** of flex circuit **712** (with the selected electrodes optionally being positioned opposite each other) may be energized and then turned off, with another pair then being energized, and so forth. The firing order might be 1 and 4, then 2 and 5, then 3 and 6. Bipolar potentials between the electrodes of the pair can induce current paths in the same general tissue region, with the power dissipated into the tissue optionally remaining substantially constant. This provides a duty cycle of about ⅓ with respect to heat and/or losses at each electrode surface. The four electrode configurations of flex circuits **714** and **716** could be used in a similar manner with a 50% duty cycle. Monopolar energy might also be applied using a larger ground pad on the skin of the patient or the like, with the duty cycle optionally being cut in half relative to bipolar energy.

Some embodiments of the vascular treatment devices, systems, and methods described herein may be used to treat atherosclerotic disease by gentle heating in combination with gentle or standard dilation. For example, an angioplasty balloon catheter structure having electrodes disposed thereon might apply electrical potentials to the vessel wall before, during, and/or after dilation, optionally in combination with dilation pressures which are at or significantly lower than standard, unheated angioplasty dilation pressures. Where balloon inflation pressures of 10-16 atmospheres may, for example, be appropriate for standard angioplasty dilation of a particular lesion, modified dilation treatments combined with appropriate electrical potentials (through flex circuit electrodes on the balloon, electrodes deposited directly on the balloon structure, or the like) described herein may employ from 10-16 atmospheres or may, surprisingly, be effected with pressures of less than 5 atmospheres, optionally being less than 3 or 2 atmospheres, in some cases with an inflation pressure of about 1 atmosphere. Such moderate dilations pressures may (or may not) be combined with one or more aspects of the tissue characterization, tuned energy, eccentric treatments, and other treatment aspects described herein for treatment of diseases of the peripheral vasculature.

Still further refinement may be included in the methods and devices described herein. For example, the energy applied to an inner wall of a blood vessel may be varied axially and circumferentially about the vessel wall in response to variations in the thickness of plaques targeted for treatment. Where the tissue signature indicates that a target tissue is present at first and second locations, and where the tissue signature or an alternative diagnostic modality (such as intravascular ultrasound, optical coherence tomography, or the like) indicates that a thickness of the target tissue at the first location is greater than a thickness of the target tissue at the second location, a greater amount of treatment energy may be directed to the first location than is directed to the second location.

Referring now to FIG. **37**A, an exemplary balloon catheter structure having an array of electrodes thereon can be seen. FIG. **37**B illustrates an exemplary RF generator for energizing the electrodes of the balloon catheter of FIG. **37**A. The balloon catheter and RF generator of FIGS. **37**A and **37**B were used in a series of experiments on animal models, with the balloons having diameter sizes ranging from about 3 mm to about 8 mm. The test subjects comprised Healthy domestic swine and Yucatan Mini-Swine. Atherosclerotic disease was induced (Injury & HFHC diet), to demonstrate the ability of a system including the balloon catheter and RF generator of FIGS. **37**A and B to deliver controlled therapy to artery walls. Histology was obtained at post-treatment endpoints to determine the extent of tissue damage and the appropriate treatment dose ranges.

Two experimental branch options were included:

- Option 1: Injure swine arteries with balloon/3-5 months HFHC feed/treat with Minnow Catheter/Survive for 0-90 days
- Option 2: Treat healthy swine arteries with Minnow Catheter/Survive for 0-90 days

Dose range and restenosis data were additional criteria.

The target tissues were accessed and imaged as follows:

- Carotid cut down (to allow bilateral iliac and femoral arterial treatment)
- 8F Cook Shuttle Sheath
- 0.014" Cordis Stabilizer wire
- Boston Scientific 40 mHz IVUS catheter

Catheter systems including the balloon catheter of FIG. **37**A were used to treat selected treatment sites. Imaging was also performed using Ziehm, Siemens, and GE fluoroscopes. Additional experimental methods and materials included the following:

- Injury procedure (Fogarty balloon overstretch and denudation); survive up to 5 months
- Treat swine iliac/femoral artery; survive up to 90 days
- 1-4 treatments per leg (average 3 per leg)
- Varied power/time protocols

Data points were obtained using:

- Pre/Post Treatment Angiographic Evaluation
- Pre/Post Treatment IVUS Evaluation (majority)
- Pre Sacrifice Angiographic Evaluation
- Pre Sacrifice IVUS Evaluation (majority)
- Histopathology

Distilled histopathology data were evaluated using the following criteria:

Inflammation—all time points

- 0=none
- 1=scattered
- 2=moderate infiltration
- 3=aggregating

Thrombus—only 7 day time points (n/a on <7 day time points)

- 0=none-fibrin
- 1=focal
- 2=laminar
- 3=thrombosis

% Stenosis—begins to form at 14 days (n/a on 7 day time points)

0=0-25%

1=26-50%

2=51-75%

3=76-100%

Such distilled data may be among the most representative and/or predictive of actual treatment vessel results.

FIG. **38**A summarizes the experiments that were performed. Certain treatment sites were excluded from the subsequent analysis based on the following criteria:

(n=6) device malfunction (e.g., higher or lower power than intended, electrode delamination)

(n=4) bussed electrodes—resulting in much higher power than anticipated

(n=4) procedural complications (occlusions): 2 vessels were treated but distal vessels remained occluded from injury procedure (preventing distal flow and most likely resulting in occlusion of treated sites), 2 tandem sites severely dissected from injury procedure, most likely treated in false lumen.

(n=1) degenerated sample—tissue not fixed properly

(n=7) no visible lesion (may be due to under-treatment, electrode conduction failure)

(n=1) diffuse treatment—site treated twice (over-treated)

Total numbers of sites treated at each of a range of different powers and times are summarized in FIG. **38**B. Safe and/or desirable treatment ranges or dosages for the animal treatment model are summarized in FIG. **39**.

The size (depth and width) of lesions generated using different energies are summarized in FIG. **40**A, while FIG. **40**B illustrates average lesion size versus the average energy (forecasted). FIG. **41** illustrates, for treatments performed with a constant power (about 2 Watts), treatment energy as a function of lesion size. FIG. **42** illustrates, for a constant treatment time (of about 2 seconds), the relationship between treatment power and lesion size. A relationship between energy and lesion size when time is held constant (at 2 seconds) is seen if FIG. **43**.

FIGS. **42**A and **42**B illustrate histopathology slides showing tissues of a vessel wall, and illustrate effects of some of the experimental embodiments of treatments on various tissue levels of the vessel wall.

In many embodiments, gentle heating energy added before, during, and or after dilation of a blood vessel may increase dilation effectiveness while lowering complications. In some embodiments, such controlled heating with balloon or other mechanical dilation may exhibit a reduction in recoil, providing at least some of the benefits of a stent-like expansion without the disadvantages of an implant. Benefits of the heating may be enhanced (and/or complications inhibited) by limiting heating of the adventitial later below a deleterious response threshold. Such heating of the intima and/or media may be provided using heating times of less than about 10 seconds, often being less than 3 (or even 2) seconds. Efficient coupling of the energy to the target tissue by matching the driving potential of the circuit to the target tissue phase angle may enhance desirable heating efficiency, effectively maximizing the area under the electrical power curve. The matching of the phase angle need not be absolute, and while complete phase matching to a characterized target tissue may have benefits, alternative systems may pre-set appropriate potentials to substantially match typical target tissues; though the actual phase angles may not be matched precisely, heating localization within the target tissues may be significantly better than using a standard power form.

Potentials driving a circuit for peak efficiencies in heating of the target tissues will not necessarily match minimized heating (or peak non-efficiencies) of the healthy collateral tissues. No single potential will even maximize desired heating, due in-part to the variability in the tissues in general, and due in-part to the various forms of disease tissues that may be present within the vessels. Healthy tissue may exhibit less variability in characteristics (including their phase angle characteristics) than the variety of different forms of vascular disease that might be targeted for treatment. For at least these reasons, it may be advantageous to select an electrical potential which is somewhat (or even very) inefficient at heating of the target tissue, so long as that energy heats the collateral tissue to a minimum or relatively low extent. In fact, a lack of efficiency in heating of the non-target tissues may be the primary aim in selecting an appropriate energy, as the energy can be negatively biased for heating the non-target tissues so that damage is inhibited when the target tissue is remodeled, even if the remodeling makes use of what would generally be considered a poor phase match to the target tissue. In such cases, the non-target tissue might be primarily, substantially, or even fully (to the extend possible) out of phase. Note that treatments of a patient may make use of a combination of phase matching energy to a target tissue for some tissues sites and/or a portion of a treatment, and phase mismatching to a non-target tissue for other sites and/or another portion of a treatment of the same site.

A variety of embodiments may take advantage of the structures and methods described herein, and may involve one or more of a variety of mechanisms for efficacy. For example, in some embodiments heating of collagen may unwind the triple helix, breaking the intermolecular cross-links of the hydrogen and disulfide bonds, thereby allowing remodeling and compaction to a gel-like state. Optionally, heating may melt lipids in fat cells, so that the fat cells shrink and the fatty acids (liquefied lipids) are expelled into the interstitial space. Proteins may be remodeled by breaking the ion-dipole, hydrogen, and Van der Waals bonds, thereby leading to the reforming and compaction of the denatured structure. In many embodiments, these or other mechanisms may occur or be initiated very quickly as the energy is absorbed, with substantial remodeling often taking place within about 2 seconds of initiation of the heating. Histological examination of treated tissues treated experimentally with the balloon-mounted electrode systems described herein has found, from 7 to 90 days post-treatment, absent/scant endothelium damage, absent/sparse/mild subendothelium inflammation, and absent/limited interstitial hemorrhage.

As the energies and powers for characterizing and/or treating tissues are relatively limited, the power source may optionally make use of energy stored in a battery, with the power source and/or associated controller optionally being contained within a hand-held housing. Use of such battery-powered systems may have benefits within crowded operating rooms, and may also help avoid inadvertent overtreatment. The batteries may be disposable structures suitable to be included in a kit with a single-use catheter, while the processor circuitry may be re-useable. In other embodiments, the batteries may be rechargeable.

Referring now to FIGS. **44**A-**44**C, relationships between applied power, time, and treatment status of experimental treatments can be better understood. FIG. **44**A illustrates reactance versus treatment time for 10 electrodes at a single treatment site. The graph may be representative of typical reactance/time curves for other experiments, and/or that might be generated by some embodiments of clinical treatments using the techniques described herein. Reactance

encompasses the imaginary component of impedance, or the resistance of a circuit to AC signals at a certain frequency, and is thereby closely associated with the phase angle. A composite graph showing a plurality of reactance versus time plots from a plurality of different subjects is shown in FIG. **44**B. These plots show a sharp change (and particularly an increase in negative reactance) some time after the start of treatment, followed by stabilization of the reactance. The change or increase in negative reactance may represent a lipid phase change and/or shrinkage of tissues induced by RF heating. Hence, when the phase change is complete, the volume of lipids remains constant, resulting in the reactance stabilization.

The plots of FIG. **44**A includes sites from test subjects P06103 and p06104 which included induced atherosclerotic disease, and sites or subjects from test subjects P06105 and P06106 which were generally health and free of such tissue. The diseased tissue was generally treated with higher power ranges from about 15 to about 20 Watts, while the healthy tissue was generally treated with lower power ranges from about 6 to about 12 Watts. These different tissue types generated different treatment reactance cycle profiles, as illustrated in FIG. **44**C.

44C is a plot of applied power versus average treatment time (in the top portion of the graph), with the number of samples in time averaging shown in the bottom portion of the graph. Each curve (with its associated data points) on the graph represents a readily identifiable point or time in the treatment cycles, as follows: Blue (identified as "LOW" on the graph and generally found at the bottom of the graph) represents the lowest negative value on the reactance curve of FIG. **44**B; Yellow (identified as "Stop") represents a transition during each treatment from a negative slope to a zero slope on the reactance curve; Orange (identified as "Stop **3**") represents the point along the reactance curve, after the Yellow or Stop point, where two sets of consecutive reactance readings are within a threshold value so as to indicate stabilization; and Red (identified as "Stop **4**") represents the point after the Yellow or Stop point where three sets of consecutive readings differ by less than the threshold.

FIG. **44**C indicates identifiably different trends in the reactance treatment cycles between healthy and diseased tissue, and/or between the upper and lower bounds of healthy and diseased tissues. Healthy tissue may exhibit a decreasing trend whereas diseased tissue may show an increasing trend. This difference may be due to the increased volume of lipids that are being exposed to the energy when higher powers are used. These larger volumes of lipids may absorb more energy during the phase change process, and this may explain any increased treatment times for higher powers in diseased tissue.

Monitoring the tissue reactance and/or phase angle during treatment may be a viable indicator for an appropriate end of treatment, allowing treatment to the target diseased tissue to be terminated while inhibiting injury to collateral tissues. This data also indicates that appropriate heating times may be less than 10 seconds, being less than 5 seconds, and ideally being from about 0.5 seconds to about 3 seconds in many embodiments.

Referring now to FIGS. **45**A and **45**B, experimental test results show how an occluded vascular site (FIG. **45**A, having an initial area of about 4 mm^2) was durably increased in size (FIG. **45**B, to about 23 mm^2). These are exemplary results, based on experiments using about 60 sites in 13 pig iliac arteries, with the study extending from 7 to 90 days post treatment. FIGS. **45**A and **45**B demonstrate these results using angiographic and IVUS imaging.

While the exemplary embodiments have been described in some detail, by way of example and for clarity of understanding, those of skill in the art will recognize that a variety of modification, adaptations, and changes may be employed. Hence, the scope of the present invention should be limited solely by the appending claims.

What is claimed is:

1. A catheter system for remodeling of a target tissue adjacent a blood vessel of a patient, the catheter system comprising:

an elongate flexible catheter body having a proximal end and a distal end with an axis therebetween;

a radially expandable structure coupled to the catheter body;

a plurality of flex circuits, each of the flex circuits including a polymer substrate attached to an outer surface of the radially expandable structure;

one or more pairs of bipolar electrodes coupled to each of the flex circuits and being engageable with a vessel wall of the blood vessel;

a power source electrically coupled to the one or more pairs of bipolar electrodes, the power source configured to energize the one or more pairs of bipolar electrodes with a controlled electrical remodeling energy that heats the target tissue so as to remodel the target tissue without thermally damaging a collateral tissue; and

a processor configured to determine the controlled electrical remodeling energy by monitoring a characteristic of a circuit comprising the one or more pairs of bipolar electrodes engaged against the vessel wall, the target tissue, and the collateral tissue,

wherein the controlled electrical remodeling energy is such that energizing the circuit heats the target tissue to a target tissue treatment temperature so as to remodel the target tissue and heats the collateral tissue to a collateral tissue temperature that is lower than the target tissue treatment temperature.

2. The catheter system of claim **1**, wherein the plurality of flex circuits are mounted to the radially expandable structure.

3. The catheter system of claim **2** wherein the radially expandable structure comprises a balloon.

4. The catheter system of claim **3**, wherein the balloon is configured for use with balloon inflation pressures of less than 10 atm.

5. The catheter system of claim **1**, wherein the one or more pairs of bipolar electrodes define a circumferentially distributed electrode array.

6. The catheter system of claim **5** wherein the power source is configured to deliver the controlled remodeling energy by sequentially energizing selected subsets of the electrode array.

7. The catheter system of claim **1**, wherein the one or more pairs of bipolar electrodes define a circumferential array having axially offset electrodes.

8. The catheter system of claim **1**, wherein the power source comprises an RF generator.

9. The catheter system of claim **8**, including a controller configured for selectively energizing the one or more pairs of bipolar electrodes.

10. The catheter system of claim **9** further wherein the processor is configured to determine electrode selection using an electrode temperature input to provide the controlled electrical remodeling energy.

11. The catheter system of claim **8**, wherein a controller is configured to control delivery of the remodeling energy with the one or more pairs of bipolar electrodes so as to heat the target tissue to a temperature between about 50° C. and 95° C.

12. The catheter of system **8** wherein the processor is further configured to deliver the remodeling energy so as to limit heating of an adventitial layer of the blood vessel to no more than 63° C.

13. The catheter system of claim **8**, wherein the processor is configured to deliver the remodeling energy in pulses of energy.

14. The catheter system of claim **8**, wherein the processor is configured to monitor a characteristic of a circuit formed along the blood vessel using selected electrodes of the one or more pairs of bipolar electrodes.

15. The catheter system of claim **14**, wherein the processor is configured to modify a remodeling energy delivered with the one or more pairs of bipolar electrodes in response to the monitored characteristic of the circuit.

16. The catheter system of claim **14**, wherein the processor is configured to halt delivery of the remodeling energy in response to the monitored characteristic of the circuit.

17. The catheter system of claim **14**, wherein the characteristic comprises impedance magnitude of the circuit.

18. The catheter system of claim **14**, wherein the processor is configured to characterize the target tissue by monitoring the characteristic of the circuit.

* * * * *