US005575788A

United States Patent [19]

Baker et al.

[11] **Patent Number: 5,575,788**

[45] **Date of Patent: *Nov. 19, 1996**

[54] **THIN LAYER ABLATION APPARATUS**

[75] Inventors: **James Baker**, Palo Alto, Calif.; **Stuart D. Edwards**, 1681 Austin Ave., Los Altos, Calif. 94024; **Chris Jones**, Palo Alto, Calif.; **Kee S. Lee**, Daly City, Calif.; **Phillip Sommer**, Newark, Calif.; **Bruno Strul**, Palo Alto, Calif.

[73] Assignee: **Stuart D. Edwards**, Los Altos, Calif.

[*] Notice: The term of this patent shall not extend beyond the expiration date of Pat. No. 5,505,730.

[21] Appl. No.: **319,373**

[22] Filed: **Oct. 6, 1994**

Related U.S. Application Data

[63] Continuation-in-part of Ser. No. 286,862, Aug. 4, 1994, which is a continuation-in-part of Ser. No. 272,162, Jul. 7, 1994, which is a continuation-in-part of Ser. No. 265,459, Jun. 24, 1994, Pat. No. 5,505,730.

[51] **Int. Cl.**[6] **A61B 17/36**

[52] **U.S. Cl.** **606/41**; 606/192; 606/32; 606/27; 607/101

[58] **Field of Search** 606/7, 13–15, 606/27–34, 41, 42, 45–50, 191–193; 607/98–102; 604/53, 21, 22, 94–102

[56] **References Cited**

U.S. PATENT DOCUMENTS

1,620,929	3/1927	Wallerich .
1,827,306	10/1931	Chapman et al. .
3,645,265	2/1972	Majzlin .

(List continued on next page.)

OTHER PUBLICATIONS

Singer, et al.; *Preliminary Clinical Experience with a Thermal Balloon Endometrial Ablation Method to Treat Menorrhagia*; Obstetrics & Gynecology, vol. 83, No. 5, Part 1, May 1994; pp. 732–734.

Phipps, et al.; *Treatment of Functional Menorrhagia by Radiofrequency–Induced Thermal Endometrial Ablation*; The Lancet, vol. 335; Feb. 17, 1990; pp. 374–376; United Kingdom.

Phipps, et al.; *Experimental and Clinical Studies with Radiofrequency–Induced Thermal Endometrial Ablation for Functional Menorrhagia*; Obstetrics & Gynecology, vol. 76, No. 5, Part 1, Nov. 1990; pp. 876–881; United Kingdom.

Prior, et al.; *Treatment of Menorrhagia by Radiofrequency Heating*; Int. J. Hyperthermia, 1991, vol. 7, No. 1, 22–230; pp. 213–216; United Kingdom.

(List continued on next page.)

Primary Examiner—Angela D. Sykes
Assistant Examiner—Michael Peffley
Attorney, Agent, or Firm—Wilson Sonsini Goodrich & Rosati

[57] **ABSTRACT**

An ablation apparatus for ablating an inner layer in an organ or lumen of a body, or any desired thin layer, includes an expandable member made of a material with a porous exterior surface. An electrolytic solution, housed in an interior of the expandable member, releases electrolytic solution through the porous exterior surface. A conforming member, which can be an open cell foam material, has an RF conductive surface, and a back side in a surrounding relationship to an exterior surface of the expandable member. Further, the conforming member includes non-zone areas that have a first porosity rate for delivering electrolytic solution to the inner layer. The conforming member also includes a zone for housing each RF electrode and electrolytic solution. Zones have a second porosity rate that is less than the first porosity rate, thus permitting electrolytic solution to pass through the non-zone areas at a faster rate than in the zones. The zones provide an area where electrolytic solution is heated to a higher temperature, due to the differences in porosity with the non-zones. With the combination of the electrode and the heated electrolytic solution in each zone, a larger electrode is created, and there is a more effective, and even application of both RF and thermal energy to the tissue site, such as the endometrium.

30 Claims, 15 Drawing Sheets

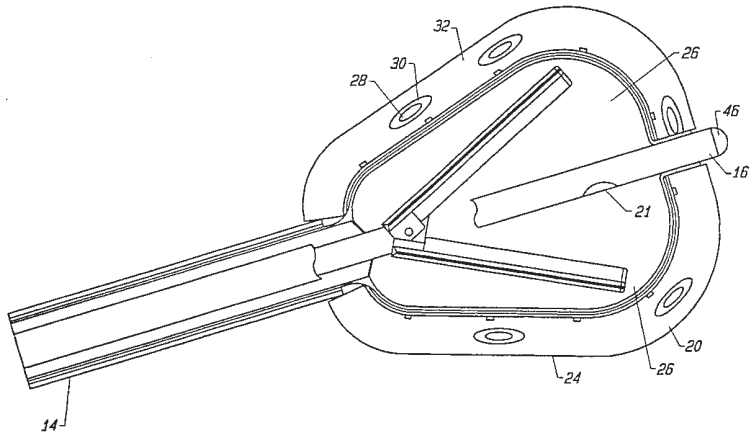

U.S. PATENT DOCUMENTS

3,840,016	10/1974	Lindemann .	
3,924,628	12/1975	Droegemueller et al. .	
3,948,270	4/1976	Hasson .	
4,057,063	11/1977	Gieles et al. .	
4,676,258	6/1987	Inokuchi et al. .	
4,799,479	1/1989	Spears	606/32
4,865,047	9/1989	Chou et al. .	
4,949,718	8/1990	Neuwirth et al. .	
4,960,133	10/1990	Hewson .	
4,961,435	10/1990	Kitagawa et al. .	
4,979,948	12/1990	Geddes et al. .	
5,084,044	1/1992	Quint .	
5,186,181	2/1993	Franconi et al. .	
5,188,122	2/1993	Phipps et al. .	
5,191,883	3/1993	Lennox et al.	606/28
5,232,444	8/1993	Just et al.	604/96
5,236,413	8/1993	Feiring	604/21
5,263,493	11/1993	Avitall	607/122
5,277,201	1/1994	Stern	606/41
5,279,299	1/1994	Imran	128/642

OTHER PUBLICATIONS

Mumford, et al.; *Sterilization Needs in the 1990's: The Case for Quinacrine Nonsurgical Female Sterilization*; American Journal of Obstetrics & Gynecology, vol. 167, No. 5, Nov. 1992; pp. 1203–1207; United Kingdom.

Neuwirth, et al.; *The Endometrial Ablator: A New Instrument*; Obstetrics & Gynecology vol. 83, No. 5, Part 1, May 1994; pp. 792–796.

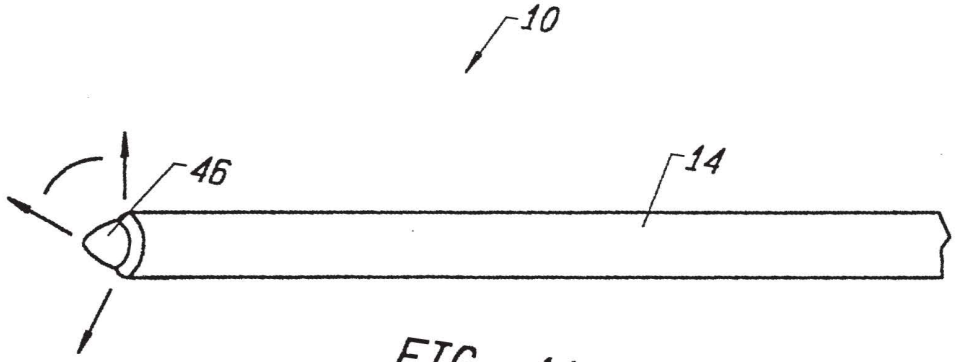

FIG. 1A

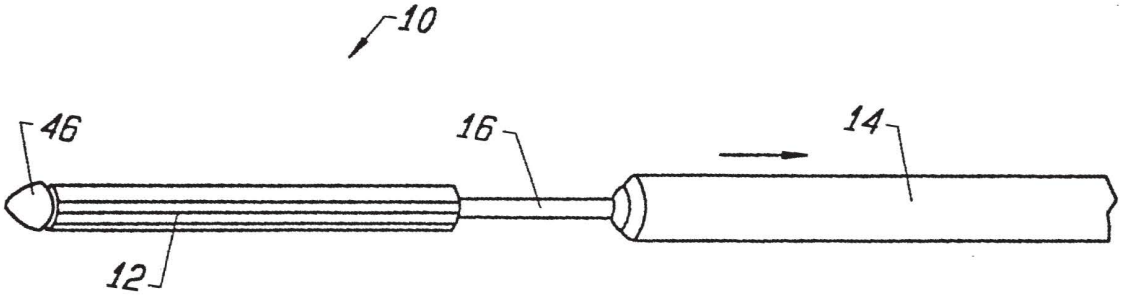

FIG. 1B

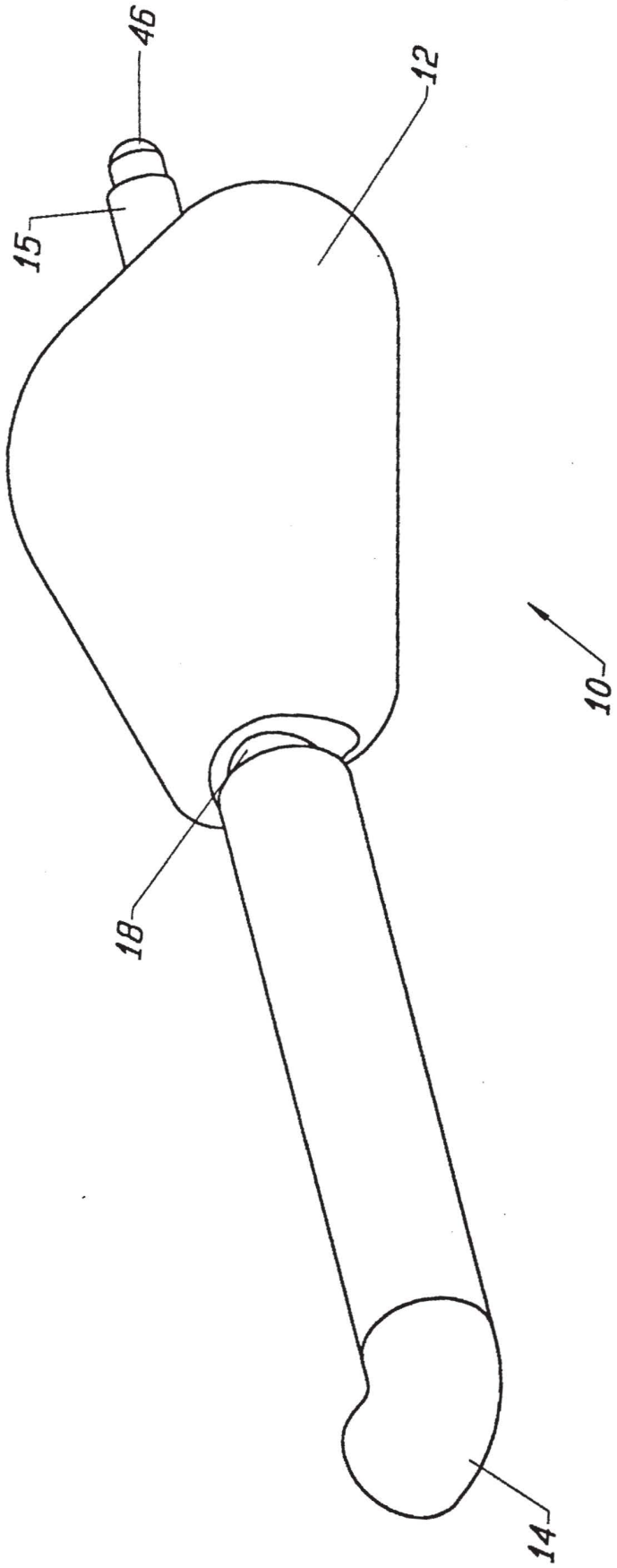

FIG. 1C

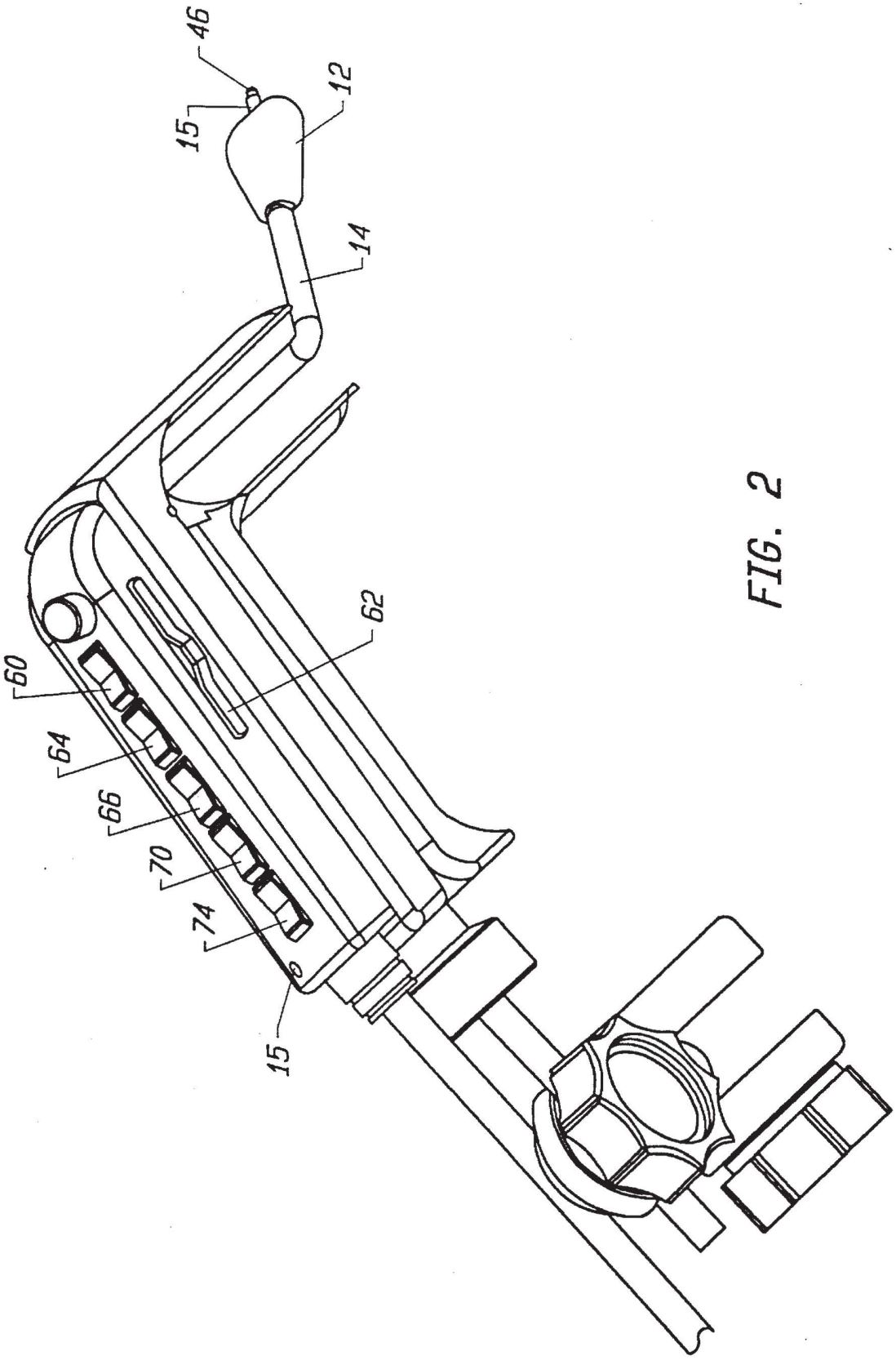

FIG. 2

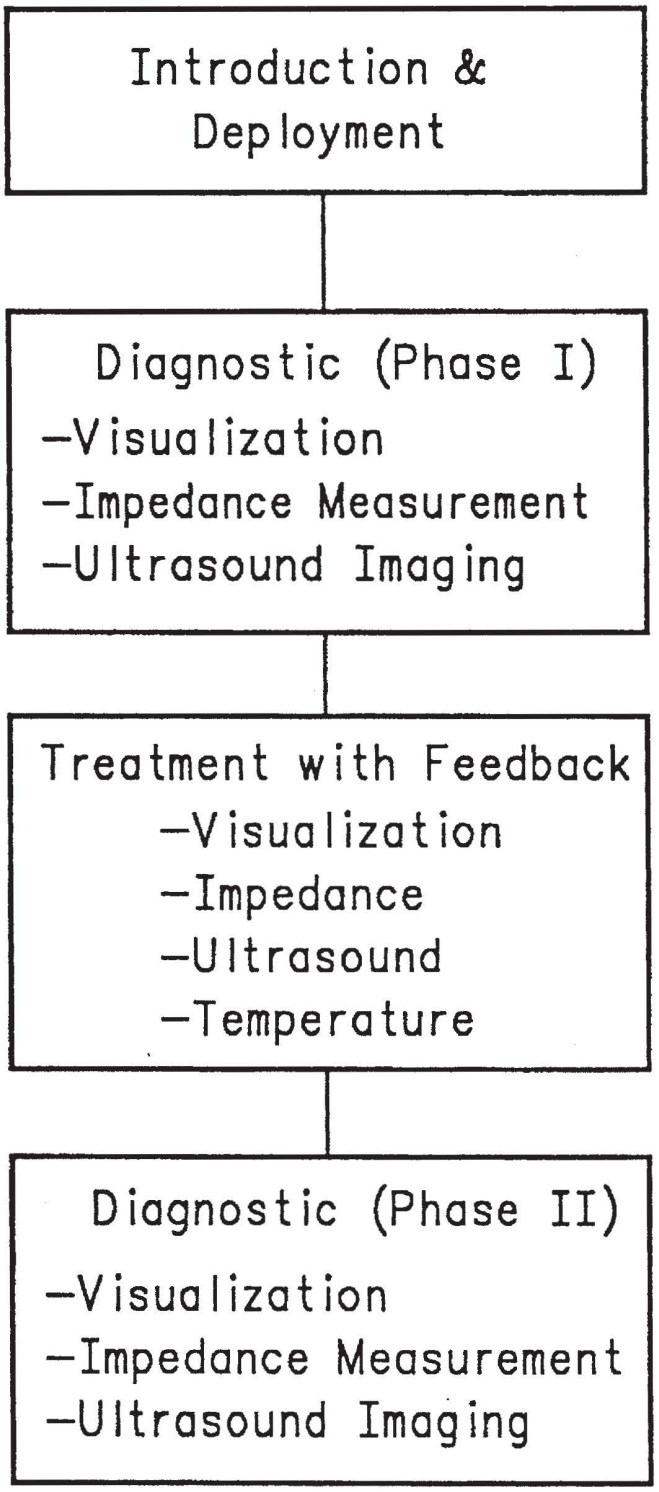
Introduction &
Deployment
Diagnostic (Phase I)
–Visualization
–Impedance Measurement
–Ultrasound Imaging
Treatment with Feedback
–Visualization
–Impedance
–Ultrasound
–Temperature
Diagnostic (Phase II)
–Visualization
–Impedance Measurement
–Ultrasound Imaging

FIG. 3

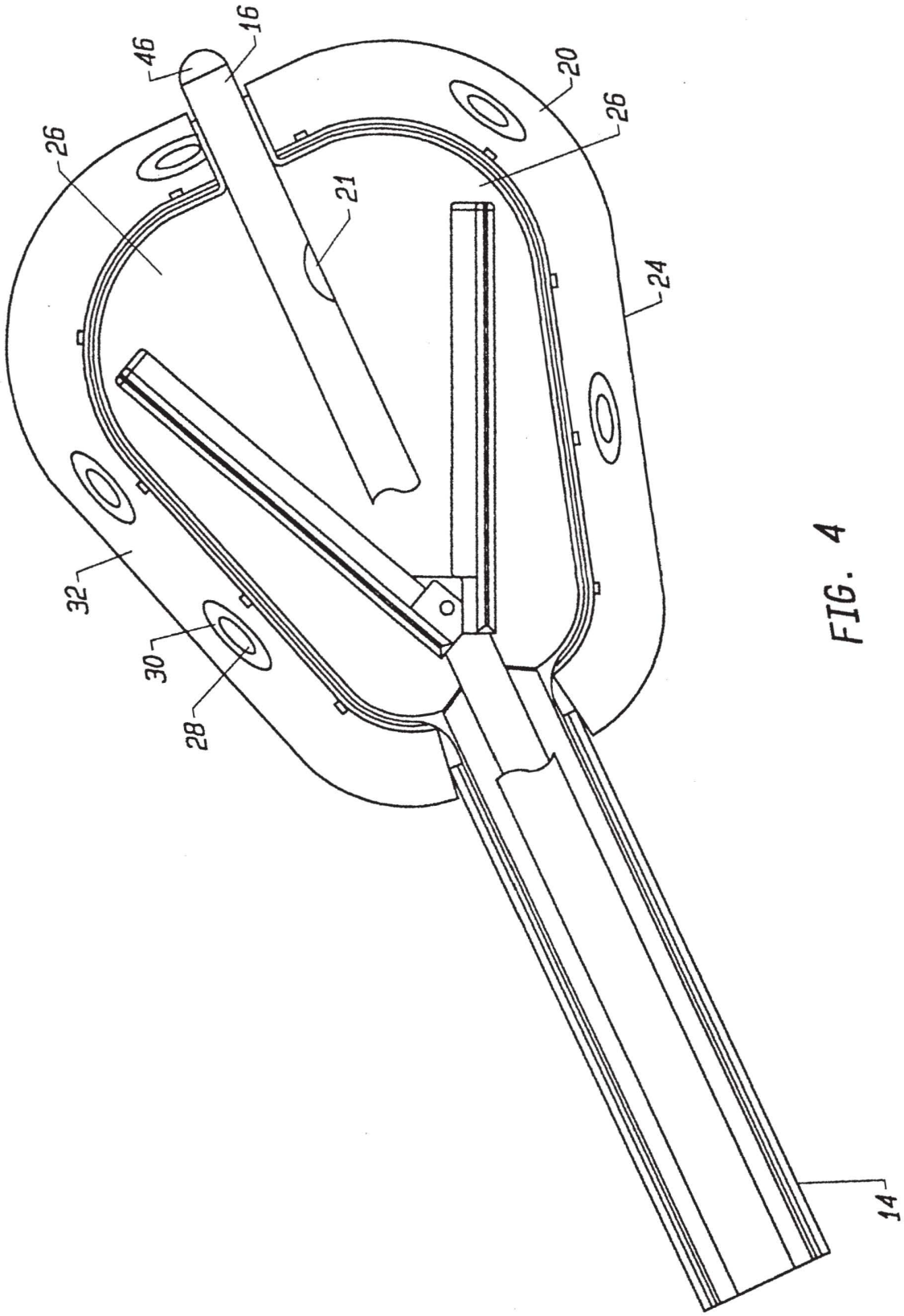

FIG. 4

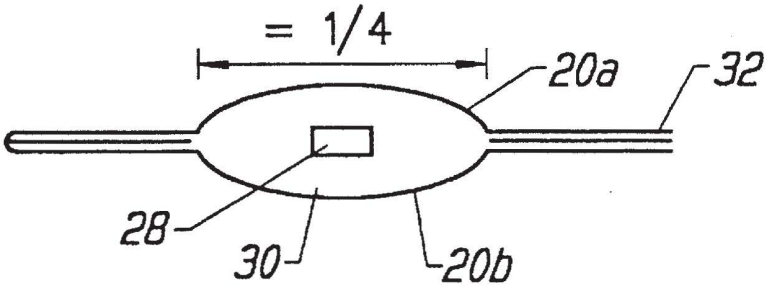

FIG. 5A

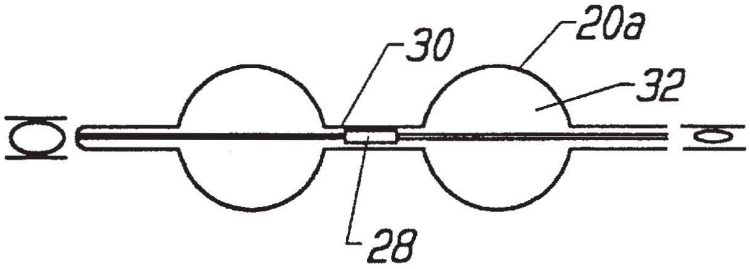

FIG. 5B

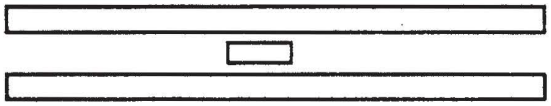

FIG. 5C

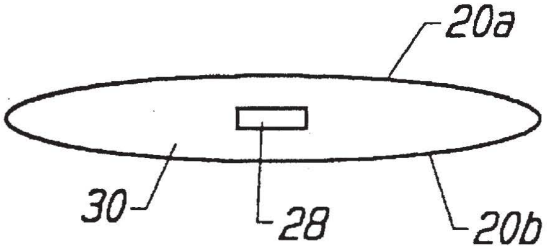

FIG. 5D

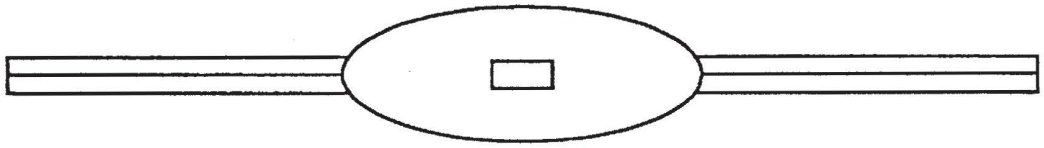

FIG. 6A

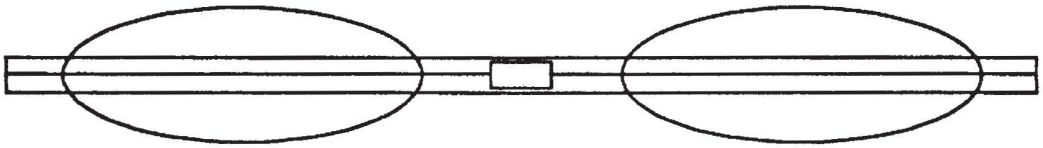

FIG. 7A

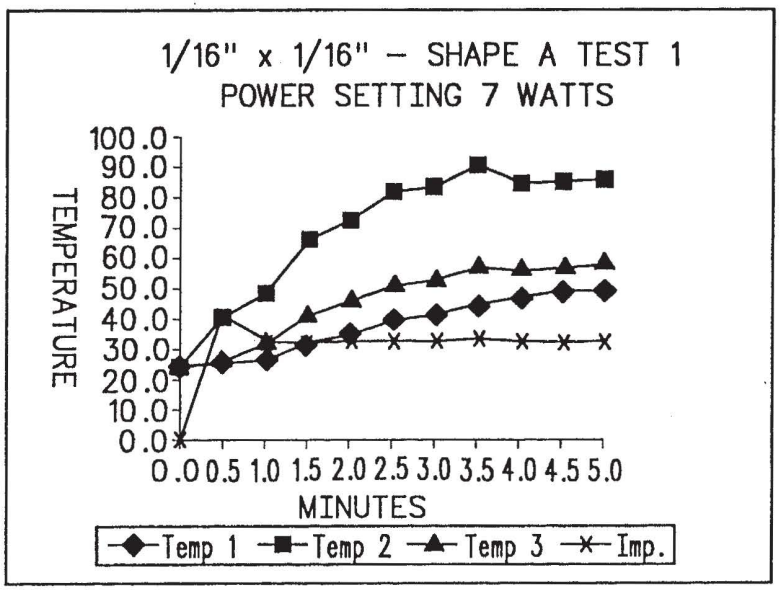

FIG. 6B

Time	Temp 1	Temp 2	Temp 3	Imp.
0.0	24.4	24.4	24.5	0
0.5	26.0	39.0	27.0	41
1.0	27.0	48.0	32.0	33
1.5	32.0	65.0	41.0	33
2.0	35.0	72.0	46.0	33
2.5	39.0	81.0	51.0	33
3.0	41.3	83.0	53.0	33
3.5	45.0	91.0	57.0	34
4.0	47.0	84.0	56.0	33
4.5	49.0	85.0	57.0	33
5.0	49.0	85.5	58.0	33

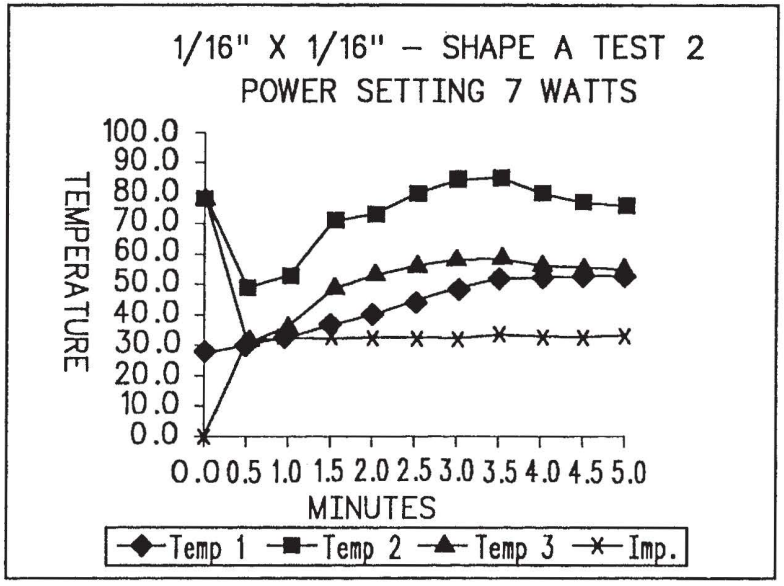

FIG. 6C

Time	Temp 1	Temp 2	Temp 3	Imp.
0.0	27.0	77.8	77.9	0
0.5	29.0	48.0	30.5	32
1.0	32.0	52.0	36.0	32
1.5	36.0	70.0	48.0	32
2.0	69.0	72.0	52.0	32
2.5	44.0	49.0	56.0	32
3.0	48.0	84.0	58.0	32
3.5	51.0	84.0	58.5	33
4.0	52.0	79.2	56.3	33
4.5	52.2	76.6	55.5	33
5.0	52.1	75.4	54.2	33

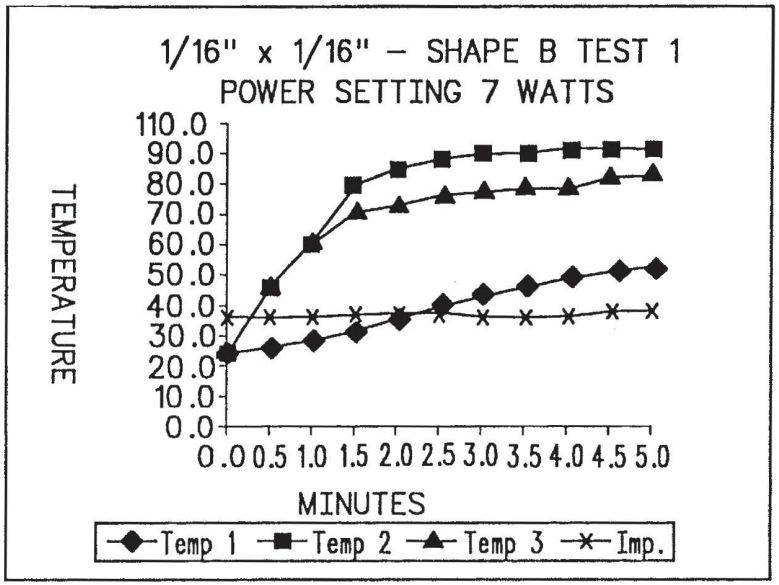

FIG. 7B

Time	Temp 1	Temp 2	Temp 3	Imp.
0.0	27.0	27.3	27.5	40
0.5	29.0	51.0	50.0	40
1.0	31.0	64.8	67.8	40
1.5	34.5	87.0	77.8	41
2.0	38.9	92.8	80.1	41
2.5	43.5	96.5	83.5	41
3.0	46.5	98.1	84.5	39
3.5	49.8	98.2	86.2	39
4.0	52.5	100.0	86.4	39
4.5	54.7	99.7	89.4	41
5.0	56.5	100.1	89.9	41

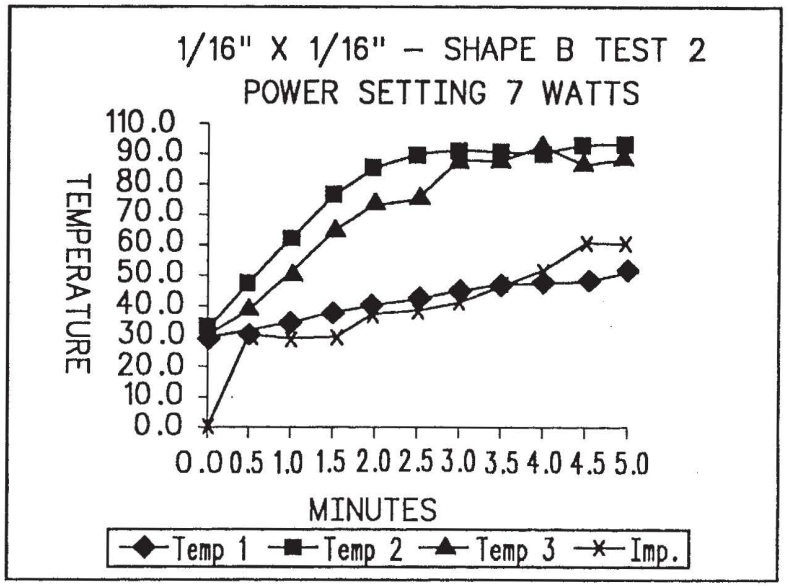

FIG. 7C

Time	Temp 1	Temp 2	Temp 3	Imp.
0.0	33.2	37.3	33.1	0
0.5	35.4	52.0	43.0	33
1.0	37.5	68.0	55.0	33
1.5	41.3	84.2	71.2	33
2.0	44.0	93.5	81.0	41
2.5	46.3	98.7	82.5	42
3.0	49.0	99.7	96.2	45
3.5	51.0	99.1	96.7	50
4.0	51.2	99.0	101.7	55
4.5	52.0	101.4	95.0	65
5.0	55.4	102.3	96.5	65

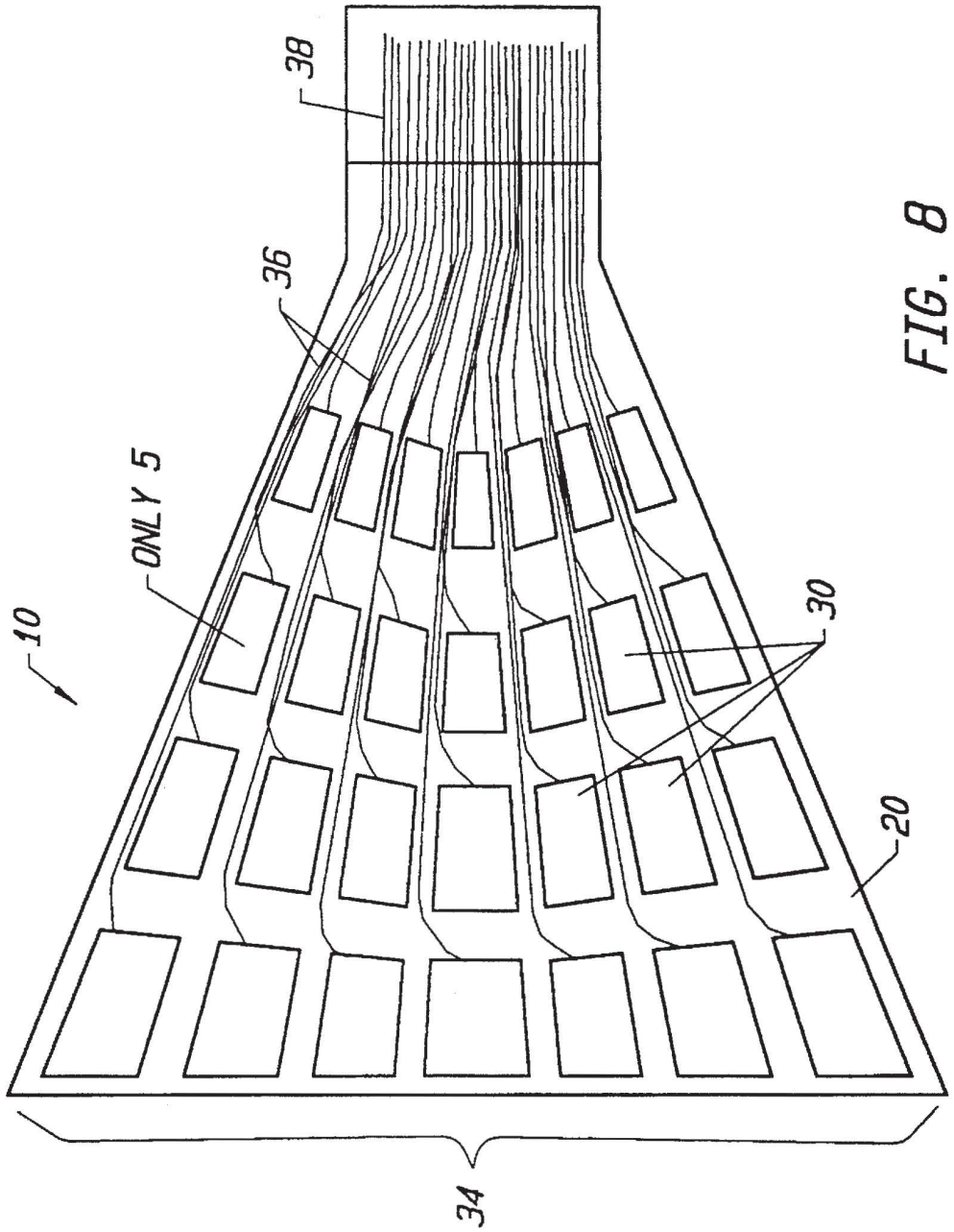

FIG. 8

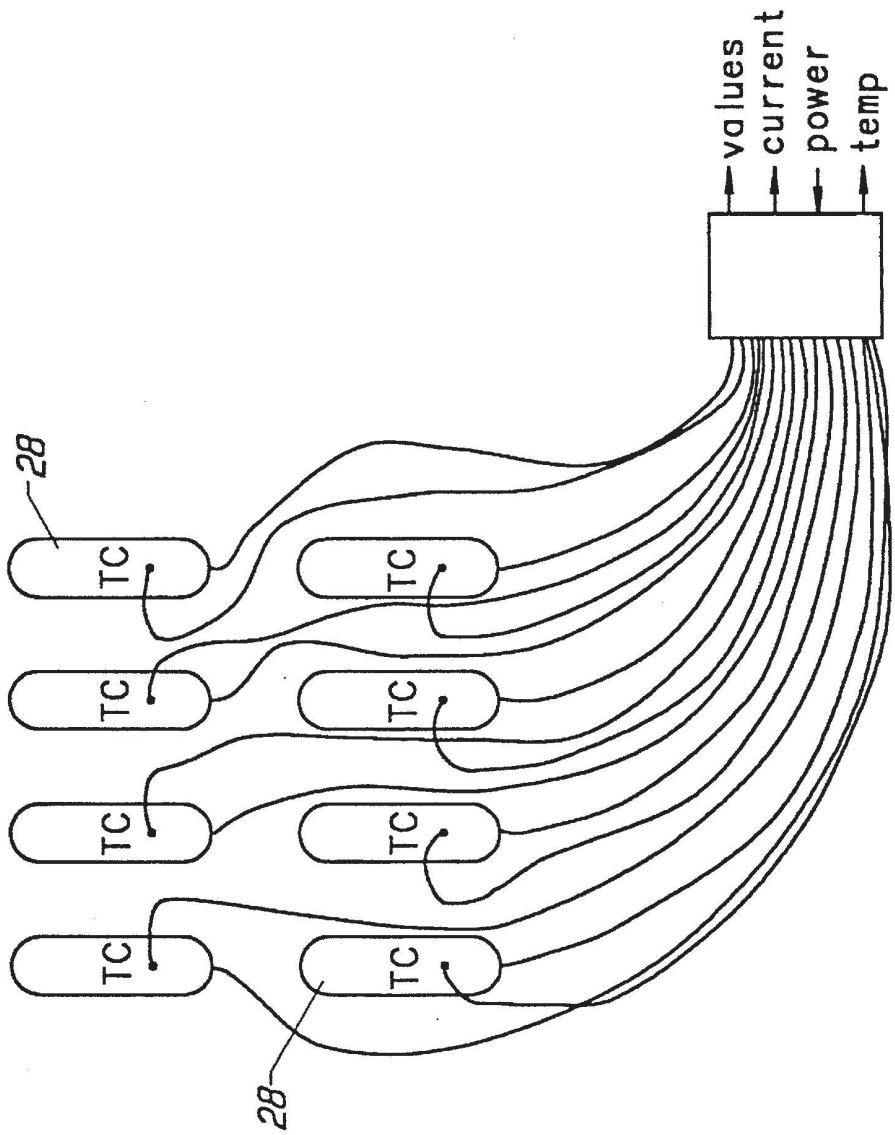

FIG. 9

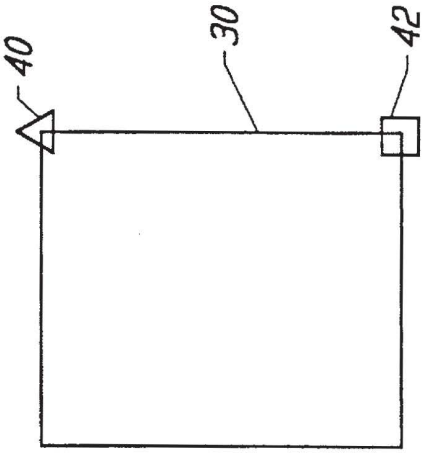

FIG. 10

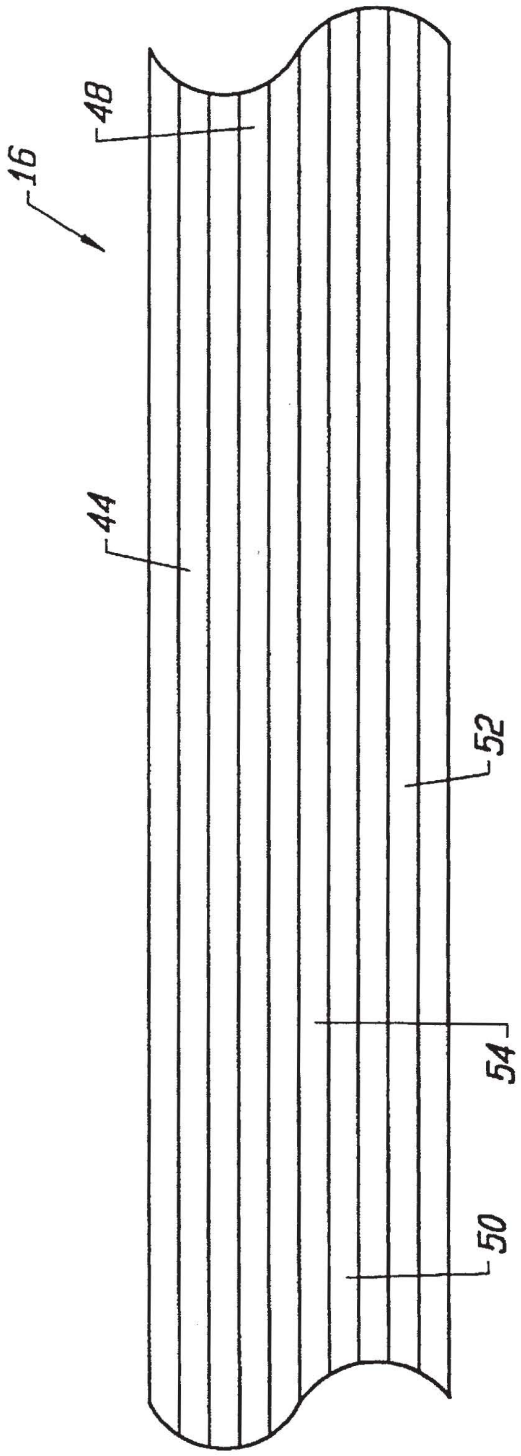

FIG. 11

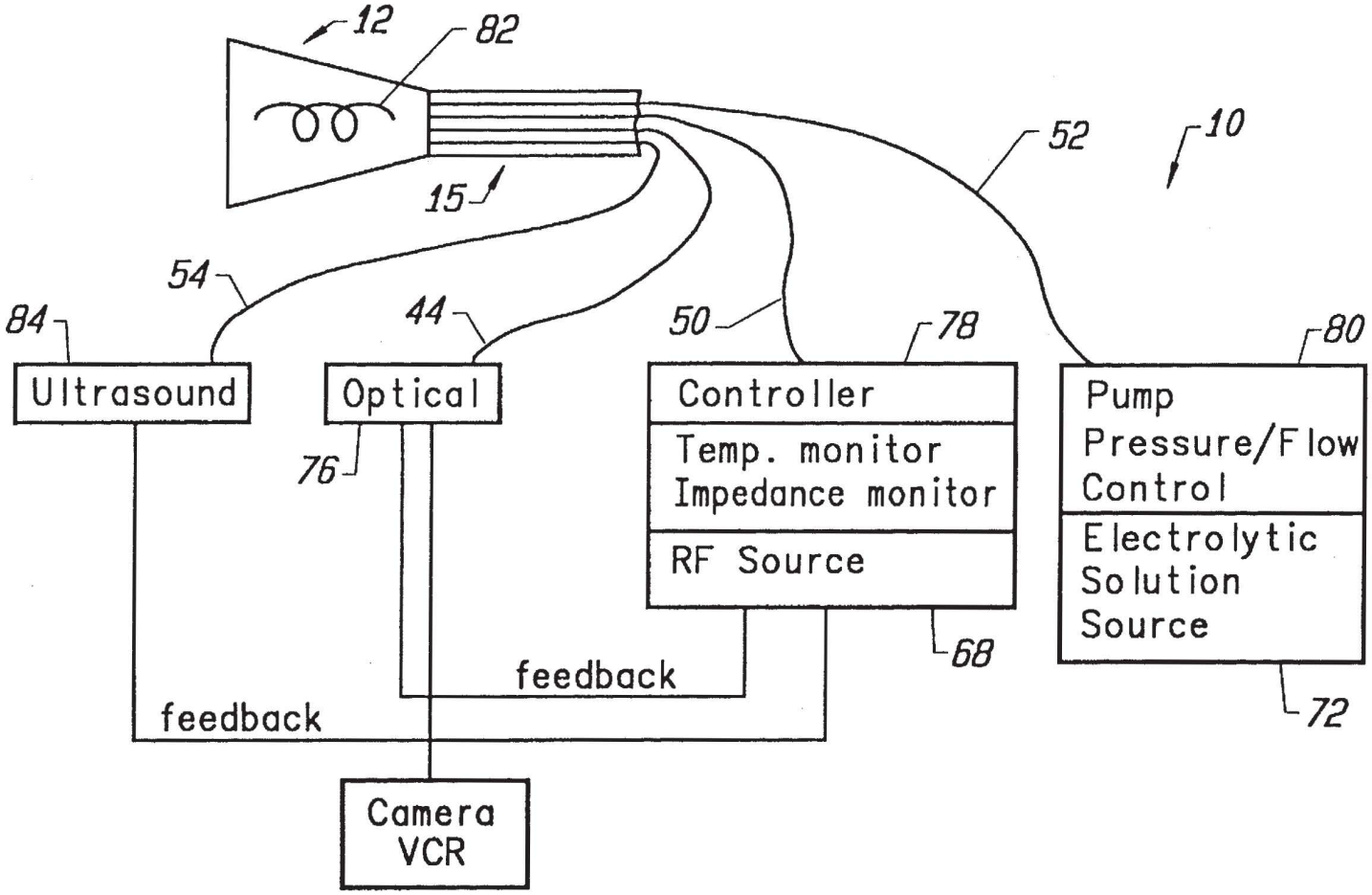
12
82
15
10
52
54
84
44
50
78
80
Ultrasound
Optical
Controller
Temp. monitor
Impedance monitor
RF Source
Pump
Pressure/Flow
Control
Electrolytic
Solution
Source
76
68
72
feedback
feedback
Camera
VCR

FIG. 12

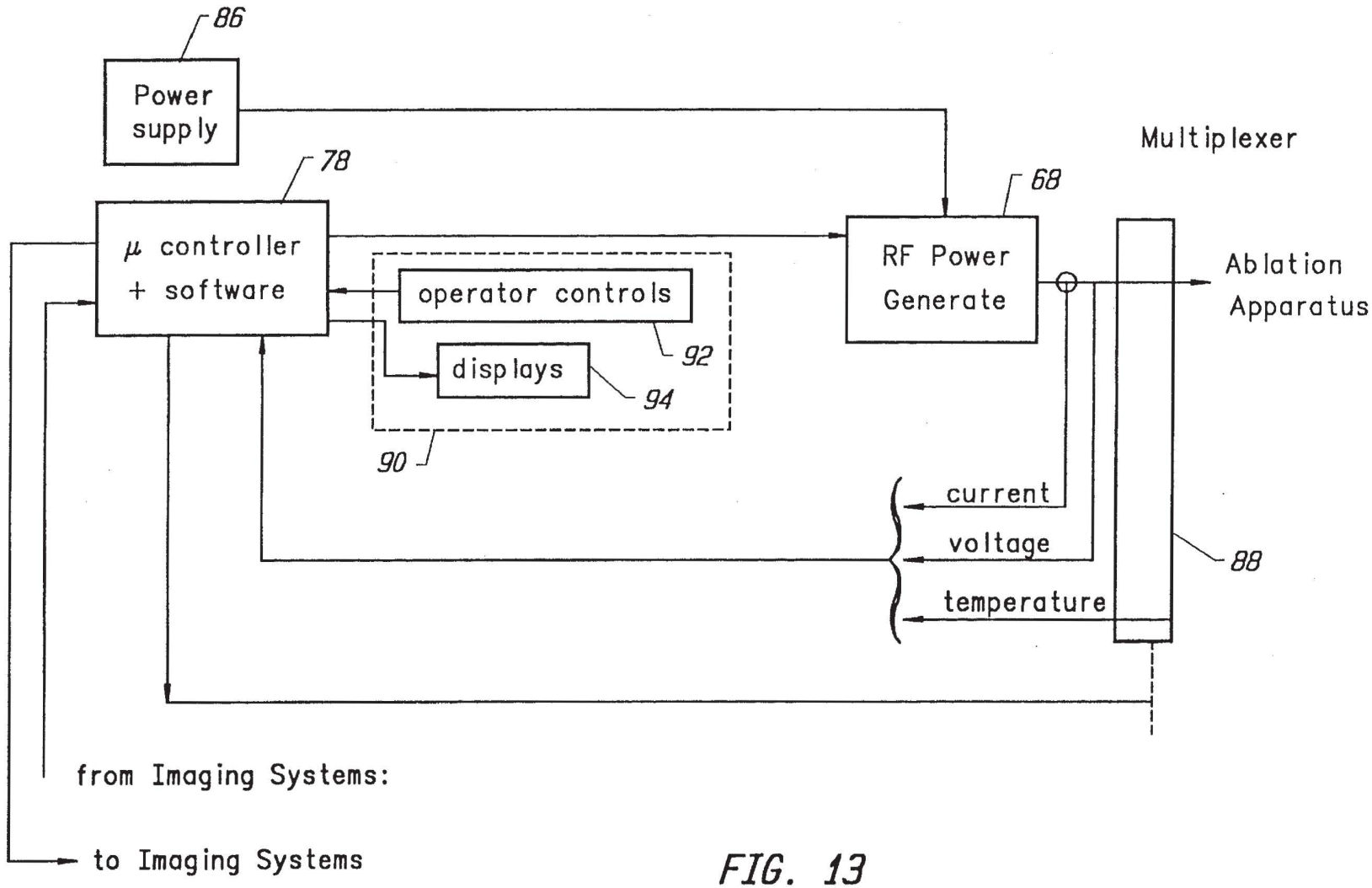
86
Power supply
78
μ controller + software
operator controls
92
displays
94
90
68
RF Power Generate
Multiplexer
Ablation Apparatus
current
voltage
temperature
88
from Imaging Systems:
to Imaging Systems

FIG. 13

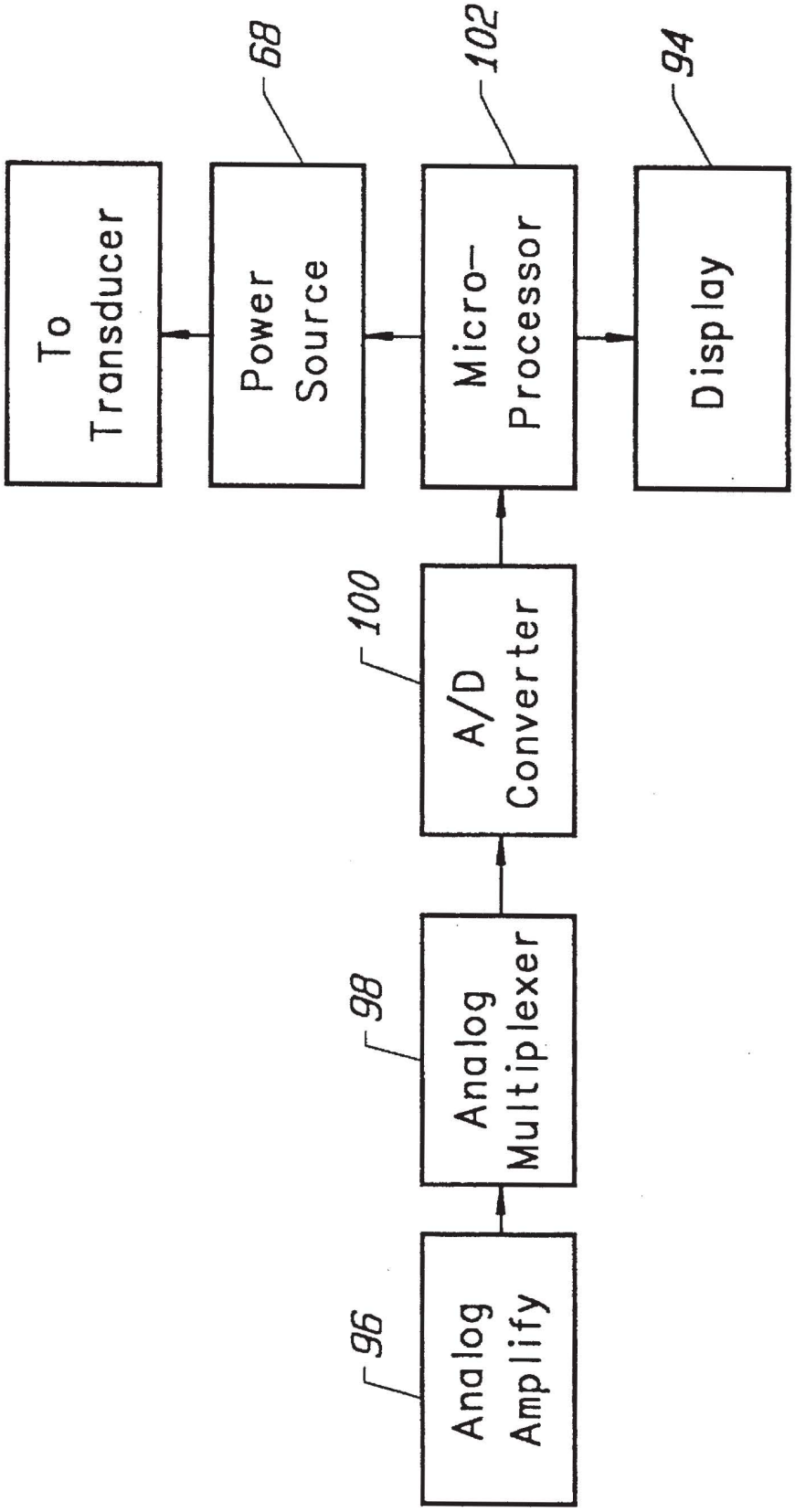
To Transducer
68
Power Source
102
Micro-Processor
94
Display
100
A/D Converter
98
Analog Multiplexer
96
Analog Amplify

FIG. 14

THIN LAYER ABLATION APPARATUS

CROSS-REFERENCE TO RELATED APPLICATIONS

This application is a continuation-in-part of Edwards, et al, U.S. patent application Ser. No. 08/286,862 entitled "Thin Layer Ablation Apparatus", filed Aug. 4, 1994, which is a continuation-in-part of Edwards, et al., U.S. patent application Ser. No. 08/272,162 entitled "Thin Layer Ablation Apparatus" , filed Jul. 7, 1994, which is a continuation-in-part of U.S. patent application Ser. No. 08/265,459 now Edwards U.S. Pat. No. 5,505,730 entitled "Thin Layer Ablation Apparatus", filed Jun. 24, 1994, all of which are incorporated by reference.

BACKGROUND OF THE INVENTION

1. Field of the Invention

This invention relates generally to an ablation apparatus for the selective ablation of the inner layers of body organs or lumens, and more particularly, to an ablation apparatus which includes an expandable member housing a heated electrolytic solution

2. Description of Related Art

There are a number of body organs and lumens, including but not limited to the uterus, gall bladder, large intestine and the like, that have inner layers which have abnormal conditions. Traditional methods of treatment have included removal of the body organ to treat the abnormal condition, the use of lasers, and the application of a thermal source.

A diseased condition of the uterus, menorrhagia, is defined as excessive menstrual bleeding in the absence of organic pathology. It has no known aetiology and it has been postulated that it is due to an inappropriate exposure of the endometrium to hormones. Menorrhagia is an exceedingly common problem, typically comprising approximately one in five outpatient referrals to gynecological departments. Women suffering severe menorrhagia are at risk from chronic anemia. The first treatment employed may be the administration of drug therapy. A major disadvantage is the need to administer drugs long term, and frequently the beneficial effects are only temporary. Another treatment is hysterectomy.

A number of physical and chemical methods have been tried as alternatives to hysterectomy, including the use of superheated steam, cryotherapy, urea injection and radium packing. The most commonly used methods as an alternative to hysterectomy are, ablation of the endometrium either by using a laser, such as a Nd:YAG laser, or the use of RF energy applied with an electrode.

Laser treatments have provided only limited success. RF is an attractive alternative. In RF heating, a conductive probe is placed within the uterine cavity and an insulated ground-plane electrode or belt is placed around the patient's midriff. RF energy is applied to the thermal probe with the external belt electrode acting as the return arm of the circuit. The electrical load presented by the RF thermal probe, patient, and external belt is matched to the output of the RF generator via a tuning unit, to form a series resonant circuit. Once tuned, the majority of the power applied to the probe is deposited into the endometrium as heat.

Current flows primarily capacitively, and an electric field is set up around the active tip of the probe. Tissue lying within the field becomes heated because of rapid oscillation of charged particles and locally induced currents.

Prior et al. have reported on the use of RF to treat menorrhagia. Power at 27·12 MHz was delivered to a probe that was placed into the uterine cavity and capacitively coupled to a second electrode consisting of a belt placed around the patient, Prior et al., Int. J. Hyperthermia, 1991, Vol. 7, No. 2, pgs 213 to 220. The active electrode was a 10 mm diameter stainless-steel cylinder with a length of 70 mm. This method, however, did not adequately deliver RF energy to the entire endometrium. Because the endometrium has an irregular surface, it is difficult to deliver sufficient RF energy to the entire structure and effectively treat menorrhagia.

However, it is desirable to have close contact between the RF conductive face and the endometrium. In U.S. Pat. No. 5,277,201 (the"'201 patent") an electroconductive, expandable balloon expands the interior of the uterus and effects electrical contact with the endometrial lining to be destroyed. The device of the '201 patent fails, however, to provide sufficient physical contact with the entire endometrium, and thus the treatment is not complete. Not only is the physical contact with the endometrium unsatisfactory, but the effective delivery of RF energy to the endometrium could be improved.

There is a need for an RF ablation apparatus, with an open foam cell structure surrounding an expandable member, that includes zones of semi-trapped electrolytic solution adjacent to electrodes, with a zone porosity that is less than non-zone sections of the open foam cell foam where there aren't electrodes. Additionally, there is a need for an ablation device which provides a heated electrolytic solution in the expandable member that is delivered to the inner layer of a body organ or lumen.

SUMMARY OF THE INVENTION

Accordingly, an object of the invention is to provide an ablation apparatus that effectively conforms to the shape of the interior of a body organ or lumen.

Yet another object of the invention is to provide an ablation apparatus that includes a conforming member surrounding an expandable member. The conforming member includes zones surround electrodes with semi-retained electrolytic solution.

A further object of the invention is to provide an ablation apparatus that includes such a conforming member which zones surrounding electrodes, with the zones having a lower porosity than non-zone sections of the conforming member.

Yet another object of the invention is to provide an ablation apparatus with expanded electrodes by positioning the electrodes in zones of the conforming member with a lower porosity than non-zone areas of the conforming member. Within the zones are pockets of semi-trapped electrolytic solution that increase the size of the electrode.

Still a further object of the invention is to provide an ablation apparatus that has a conforming member with zones surrounding electrodes, and each zone has a lower porosity than non-zone sections of the conforming member.

Yet another object of the invention is to provide an ablation apparatus with the conforming member that effectively conforms to the shape of the interior of a body organ or lumen, and delivers heated electrolytic solution to a target tissue site.

Still a further object of the invention is to provide an ablation apparatus that includes a plurality of electrodes positioned in the conforming member, and heated electro-

lytic solution is passed from an interior of an expandable member surrounded by the conforming member to the inner lining of an organ or lumen in order to reduce the amount of time required for ablation.

Still a further object of the invention is to provide an ablation apparatus that releases heated electrolytic solution to the endometrium, selectively distributes energy to the endometrium, and includes a feedback device to monitor impedance and temperature at the endometrium.

These and other objects are achieved with an ablation apparatus for ablating an inner layer in an organ or a lumen of the body that includes an expandable member. The expandable member is made of a material with a porous exterior surface that defines an expandable member interior that contains an electrolytic solutions. Electrolytic solution is released from the expandable member through the porous exterior surface. One or more electrodes are included. A conforming member, made of a material that provides substantial conformity between the conductive surface and the inner layer, has non-zone sections with a first rate of porosity for delivering electrolytic solution to the inner layer. The conforming member has an RF conductive surface and a back side in surrounding relationship to the exterior surface of the expandable member. The conforming member includes zones for housing the electrodes and electrolytic solution. The zones, with the electrodes, have a second porosity rate that is less than the first porosity rate, and electrolytic solution passes through the zone at a slower rate than electrolytic solution passing through non-zone areas of the conforming member. An RF power source is coupled to the electrode.

In another embodiment of the invention, the ablation apparatus includes an expandable member, made of a material with a porous exterior surface. A heated electrolytic solution is housed in an interior of the expandable member and is released through the porous exterior surface. A fluid conduit, with a conductive surface, and a back side in a surrounding relationship to the expandable member, is made of a material that provides substantial conformity between the conductive surface and the inner layer of the organ or lumen. Heated electrolytic solution is received from the interior of the expandable member, and delivered through the fluid conduit to the inner layer. A plurality of electrodes are positioned between the expandable member and the fluid conduit. An RF power source is coupled to the plurality of electrodes. Also included is a device for heating the electrolytic solution to a selected temperature.

The conforming member, also called the fluid conduit, is made of an open cell material. The zone areas have less open cells than the non-zone areas. Electrolytic solution in the zones, and the associated electrodes, effectively form larger electrodes. Two pieces of open cell foam can be sealed together to form the conforming member, with one or more electrodes positioned between the two pieces. Sealing of the two pieces of open cell foam can be in the non-zone areas. Alternatively, the two pieces can sealed in the zone areas, and around the periphery of the conforming member. A groundpad can be attached to an exterior surface of a patient.

The ablation apparatus can also include an electrolytic solution source, and a fluid delivery device for delivering the electrolytic solution from the electrolytic solution source to the interior of the expandable member. A device for heating the electrolytic solution can be associated with the electrolytic solution source. In this embodiment, heated electrolytic solution is introduced into the interior of the expandable member. Alternatively, the device for heating the electrolytic solution can be positioned in the interior of the expandable member. Additionally, a feedback device can be included that is responsive to a detected characteristic of the inner layer and provides a controlled delivery of RF energy to the plurality of electrodes.

DESCRIPTION OF THE DRAWINGS

FIG. **1**(*a*) is a perspective view of an ablation apparatus of the invention housed in an introducer sleeve and includes viewing optics.

FIG. **1**(*b*) is a perspective view of an ablation apparatus of the invention in a non-deployed position as the introducer sleeve is withdrawn.

FIG. **1**(*c*) is a perspective view of an ablation apparatus of the invention in a deployed position.

FIG. **2** is a perspective view of a handle associated with the ablation apparatus of the invention.

FIG. **3** is a flow chart listing the operation of the ablation apparatus of the invention.

FIG. **4** is a cross-sectional view of the ablation apparatus of the invention, illustrating the zone and non-zone sections of the conforming member.

FIG. **5**(*a*) is a cross-sectional view of the conforming member made of an open cell foam material. Two pieces of foam are sealed to create a zone, or pocket, of electrolytic solution around an RF electrode.

FIG. **5**(*b*) is a cross-sectional view of the conforming member made of an open cell foam material. Two piece of foam are sealed at the electrode, creating the zone that comprises an RF electrode and electrolytic solution which remains in the zone a longer time than the electrolytic solution in non-zone regions of the conforming member.

FIG. **5**(*c*) and **5**(*d*) are cross-sectional views of two layers of an open cell foam that are jointed with an RF electrode disposed between the two layers, forming a zone. The zone has a lower porosity rate than nonzone areas. Included in the zone is electrolytic solution, which together with the RF electrode create a larger electrode.

FIG. **6**(*a*) to **6**(*c*) is a graph and table of measured temperatures of zone and adjacent non-zone sections of the ablation apparatus illustrated in FIG. **5**(*a*).

FIG. **7**(*a*) to **7**(*c*) is a graph and table of measured temperatures of zone and adjacent non-zone sections of the ablation apparatus illustrated in FIG. **5**(*b*).

FIG. **8** is a cross-sectional view of a multiplicity of zones in the conforming member.

FIG. **9** is a perspective view of a plurality of electrodes that comprise a flexible circuit in the interior of the conforming member.

FIG. **10** is a perspective view of one of the segments of the flexible circuit shown in FIG. **8**.

FIG. **11** is a cross-sectional view of the introducer sheath associated with the expandable member of the invention. Housed in the introducer sheath are viewing and illumination fibers, a tension wire, an RF cable, an ultrasound cable and an electrolytic solution tube.

FIG. **12** is a representative block diagram of the invention showing the light, RF, ultrasound and electrolytic sources and their relationships to the expandable member.

FIG. **13** is a block diagram of an ablation apparatus of the invention that includes a controller and multiplexer.

FIG. **14** is a block diagram of one embodiment of a system for processing outputs from the temperature sensors and ultrasound transducers.

DETAILED DESCRIPTION OF THE PREFERRED EMBODIMENTS

An ablation apparatus **10** of the invention is illustrated in FIGS. **1**(*a*), **1**(*b*) and **1**(*c*) and includes an expandable member **12** that is introduced into a desired body organ or lumen through an introducer sleeve **14** which can be attached to a handpiece **15** (FIG. **2**). In one embodiment of the invention, expandable member **12** is a balloon, but it will be appreciated that other devices capable of being in confined nondeployed states, during their introduction into the desired body organ or lumen, and thereafter expanded to deployed states, can be utilized.

Expandable member **12** is rolled or folded around a core lumen **16** which can contain optics, fluid paths, sensor and electronic cabling. It can be attached to a ratchet hinge **18** which imparts movement of expandable member **12** when it is in a body organ or lumen. Ablation apparatus **10** can be generally rolled or folded around a helical type of elongated structure in order to provide a wringing type of motion to assist in its removal from the body organ or lumen.

Expandable member **12** is introduced through introducer sleeve **14** in a folded, or non-distended configuration. Introducer sleeve **14** can be of different cross-sectional sizes. In one embodiment, it is small enough to be introduced into the cervix under local anaesthesia, and can be on the order of about 5 mm or less in diameter.

Formed spring wires can be included in expandable member **12** to assist in opening it to the deployed position. Positioned on handle **16** are a variety of actuators which provide physician control of ablation apparatus **10**, as more fully described hereafter. The actuators can be rocker switches, slider switches and the like, as are well known to those skilled in the art. Ablation apparatus **10** is sufficiently opaque that it is visible under ultrasound.

Introducer sleeve **14** is introduced into the desired organ or body lumen, as shown in FIG. **1**(*a*), with expandable member **12** in a nondeployed configuration. Following introduction, introducer sleeve **14** is withdrawn and can be retracted into handle **16**. Introducer sleeve **14** can be of conventional design, such as an introducing catheter, well known to those skilled in the art. Expandable member **12** can be swept from side to side, which movement can be imparted by hinge **18**. Hinge **18** also provides for easy introduction of ablation apparatus **10** through the vagina, and into the cervix and uterus.

Generally, ablation apparatus **10** can be a monopolar or bipolar electrode system. It is capable of expanding so that expandable member **12** becomes expanded within a selected body organ or lumen, and RF energy is delivered to an inner lining of the organ or lumen. RF and thermal energy are passed through the inner lining or surface for a time period selected that is sufficient to achieve a desired level of ablation. This varies depending on the body organ or lumen. In a monopolar mode RF current flows through body tissue from a return electrode, in the form of a conductive pad, applied to the patient's outer skin. Maximum heating occurs where the current density is the greatest.

In one embodiment of the invention, the body organ is the uterus, and the lining is the endometrium. It will be appreciated that the present invention is not limited to the endometrium of the uterus and that other organs, including but not limited to the general field of gynecology, can also be treated with the invention.

Electric current flowing through the endometrium causes heating due to resistance of the tissue. Endometrial ablation can be accomplished as a relatively simple medical procedure with local anesthesia.

FIG. **3** is a flow chart illustrating one embodiment of the operation of ablation apparatus **10**. In this embodiment, ablation apparatus **10** is first introduced into the uterus under local anaesthesia. Introducer sleeve **14** is then withdrawn, and expandable member **12** is expanded, either mechanically, with the introduction of a fluid or gaseous expanding medium, such as an electrolytic solution, or a combination of both. For this purpose formed spring wires can be used alone or in combination with a fluid to expand expandable member **12**. Electrolytic solution is introduced into expandable member **12**, causing it to become distended and be self-retained in the uterus.

Electrolytic solution in expandable member **12** is heated to a preselected temperature, which can be modified and adjusted as necessary. For example, electrolytic solution can be heated and maintained at a temperature between about 60 to 90 degrees C. It can be initially introduced into expandable member **12** at the higher temperature, or it can be heated to the higher temperature in expandable member **12**. By providing a heated electrolytic solution, there is a reduction in the amount of time needed to complete a satisfactory ablation.

The diagnostic phase then begins. This is achieved through a variety of mechanisms, including but not limited to, (i) visualization, (ii) measuring impedance to determine the electrical conductivity between the endometrium and ablation device **10** and (iii) the use of ultrasound imaging to establish a base line for the tissue to be treated.

In the treatment phase, the ablation of the uterus can be conducted under feedback control. This enables ablation device **10** to be positioned and retained in the uterus. Treatment can occur with minimal attention by the physician. Ablation apparatus **10** automatically conforms to the interior of the uterus, provides a relatively even flow of heated electrolytic solution to assist in the ablation, and a plurality of electrodes contained in zones, effectively create a flexible circuit. It can be multiplexed in order to treat the entire endometrium or only a portion. Feedback can be included and is achieved by, (i) visualization, (ii) impedance, (iii) ultra-sound or (iv) temperature measurement. The feedback mechanism permits the turning on and off of different electrodes of the flexible circuit in a desired ablative pattern, which can be sequential from one electrode to the next, or it can jump around different electrodes.

The amount of ablation can vary. However, it is desirable to ablate about 2 to 3 mm, with approximately 1 mm of the myometrium. Ultrasound can be used to create a map of the interior of the uterus. This information is input to a controller. Individual electrodes are multiplexed and volumetrically controlled. If desired, the area of ablation can be substantially the same for each ablation event.

Even though there are folds and crevices in the endometrium, the entire endometrium can be treated and selectively ablated. The selective ablation may be the even penetration of RF energy to the entire endometrium, a portion of it, or applying different levels of RF energy to different endometrium sites, depending on the condition of the endometrium. The depth of RF and thermal energy penetration in the endometrium is controlled and selectable.

A second diagnostic phase may be included after the treatment is completed. This provides an indication of ablation treatment success, and whether or not a second phase of treatment, to all or only a portion of the uterus, now or at some later time, should be conducted. The second

diagnostic phase is accomplished through, (i) visualization, (ii) measuring impedance, (iii) ultrasound or (iv) temperature measurement.

One embodiment of ablation apparatus **10** is illustrated in FIG. **4**. Expandable member **12** is made of a material that can be an insulator. For purposes of this disclosure, an insulator is a barrier to thermal or electrical energy flow. In this embodiment, expandable member **12** is substantially surrounded by a conforming member **20** which is also called a fluid conduit. Conforming member **20** receives electrolytic solution from expandable member **12**, heated or not heated, through a plurality of apertures **22** formed in expandable member **12**, and passes it to conforming member **20**. Expandable member **12** is made of a material that permits controlled delivery of the electrolytic solution through one or more distribution ports **21**, and can be made of a microporous material that does not include distinct apertures **30**.

In one embodiment, ablation apparatus **10** conforms tightly with the interior of the uterus so that all, or almost all, of the endometrium is in contact with a conductive surface **24** of conforming member **20**. Conforming member **20** is fitted into the entire uterus and expandable member **12** does not have to be moved about the uterus to complete the treatment. Alternatively, ablation apparatus **10** may not entirely fill the uterus, and ablation apparatus **10** is then moved about the uterus in order to ablate all of the endometrium, or those sections where ablation is desired. Selected portions of the endometrium may not be ablated, such as those portions close to the fallopian tubes.

Conforming member **20** is made of a material that substantially conforms to the surface of the endometrium. This provides better conformity than the mere use of expandable member **12**, and the delivery of treatment energy to the endometrium is enhanced.

While expandable member **12**, with a single interior section **26**, is preferred, it will be appreciated that expandable member **12** can be made of different compositions or materials, with one or more open or closed cells or chambers. The plurality of such cells or chambers can be compressed or configured in a small diameter for insertion, and are then expanded after insertion to establish the desired electrical contact with the targeted surface of the endometrium.

Conforming member **20** is made of a material that suitably conforms to a surface to be ablated, and can have a thickness in the range of about 0.01 to 2.0 cm. Conforming member **20** can be made of a foam type material. Suitable materials include but are not limited to, knitted polyester, continuous filament polyester, polyester-cellulose, rayon, polyimide, polyurethane, polyethylene, and the like. Suitable commercial foams include, (i) Opcell, available from Sentinel Products Corp., Hyannis, Mass. and (ii) UltraSorb, HT 4201 or HT 4644MD from Wilshire Contamination Control, Carlsbad, Calif. Conforming member **20** has characteristics that make it particularly moldable and formable to irregular surfaces. In one embodiment, conforming member **20** is made of a an open cell foam, or alternatively it can be a thermoplastic film such as polyurethane, low density polyethylene, or may be a silicone rubber. Additionally, conforming member **20** can be capable of extruding conductive materials from conforming member **20** itself. Conforming member **20** can be implanted with conductive ions, and conductive surface **24** can be coated with a material that improves its conductivity.

FIGS. **5**(*a*) through **5**(*c*) illustrate that conforming member **20** can be created by sealing two conforming members **20**(*a*) and **20**(*b*) together. In FIG. **5**(*a*), conforming members **20**(*a*) and **20**(*b*) are sealed together between individual electrodes **28**. This creates a pocket or zone **30**. Zone **30** has a lower porosity for the flow of electrolytic solution than non-zone sections **32**, e.g., all other sections of conforming member **20** which do not include a zone **30** with an associated electrode **28**. The porosity of non-zone sections **32** is greater than the porosity of zones **30**.

Electrolytic solution is released from interior **26** of expandable member **12** and passes through conforming member **20**. The differences in porosity is achieved in an open cell foam, with zones **30** having less open cells than non-zone sections **30**. Electrolytic solution is retained in zones **30** longer than in non-zone sections **32** and its temperature is elevated. The semi-trapped electrolytic solution in zones **30** combines with electrode **28** to create a larger electrode. The larger electrode produces RF and thermal energy to conforming member **20**, which is transferred to tissue through conductive surface **24**.

Electrolytic solution travels through zones **30** at a slow enough rate to create this larger electrode effect. The porosity of zones **30** is selected so that electrolytic solution remains in the respective zone **30** sufficiently long enough to become heated to an elevated temperature and produce the larger electrode effect.

In FIG. **5**(*a*), conforming members **20**(*a*) and **20**(*b*) are sealed in non-zone areas **32** and along the peripheries of **20**(*a*) and **20**(*b*). This creates a structure that, (i) conforms closely to the endometrium or other organ/lumen structures, (ii) effectively introduces electrolytic solution to the desired tissue site and (iii) with the inclusion of zones **30** with lower porosity, electrolytic solution is elevated to a higher temperature. The result is a greater RF and thermal effect that is evenly applied to the tissue site such as the endometrium.

FIG. **5**(*b*) illustrates conforming members **20**(*a*) and **20**(*b*) sealed at electrode **28** to create zone **30**, and not sealed at non-zone sections **32** except at the peripheries of conforming members **20**(*a*) and **20**(*b*).

FIG. **5**(*c*) illustrates zone **30** filled with electrolytic solution which becomes heated to a desired elevated temperature while it remains in zone **30**.

As an example of ablation apparatus **12**, a foam patch with zones **30** and non-zone sections **32**, utilized two pieces of UltraSORB foam which were sealed between 0.004 inch by 0.016 inch (SST) flat electrode wire with approximately 80 Ω/foot. About 1.0 inch of SST wire was exposed in the foam. Different foam thickness were used and included, (i) 1/16 inch by 1/8 inch, (ii) 1/8 inch by 1/16 inch and (iii) 1/16 inch by 1/16 inch. The foam size was about 1.0 inch by 1.0 inch. A return electrode, through a sheet of brass, was utilized. A 0.9% saline solution was utilized and placed in a test bath. The presoaked foam patch was laid inside the test bath. The system was energized and temperature across the path was monitored. Temperature T_2 represented the temperature in the zone, while temperatures T_1 and T_3 represented temperatures in adjacent non-zone sections **32**.

The results are shown in FIGS. **6** and **7**. Temperatures in zone **30** were higher than temperatures in adjacent non-zone sections **32**. In FIG. **6**, 50 Ω was connected, and the impedance was about 85 Ω. In FIG. **7**, 50 Ω was connected, and the impedance was about 90 Ω.

Interior **26** can contain heated electrolytic solution, such as saline. The amount of electrolytic fluid in interior **26** is one of the factors for establishing the flow rate of electrolytic solution out of interior **26**. Expandable member **12** can become more pressurized by increasing the amount of

electrolytic solution. As electrolytic fluid enters expandable member **12**, the pressure within interior **26** increases. This increases the flow rate of electrolytic solution out of apertures **22**. A reduction in pressure will correspondingly reduce the flow rate. Electrolytic solution is introduced into interior **22** through fluid distribution ports **21** formed in, for example, core lumen **16**, or it can be introduced through a separate fluid conduit.

Heated electrolytic solution can be delivered from expandable member **12**, through conforming member **20**, and is then delivered to the tissue to be ablated. Fluid flow can be continuous or noncontinuous to the tissue site.

As shown in FIG. **8** a flexible circuit **34** is made of individual electrodes **28** in zones **30** and positioned within conforming member **20**. FIG. **9** shows individual electrodes **28**, with thermocouples, that can be used and multiplexed in either of monopolar or bipolar schemes.

Referring again to FIG. **8**, electrodes **28** and zones **30** are capable of multiplexing so that only certain electrodes **28** deliver RF and thermal energy at a particular time period. Zones **30** provide individual ablative coverage, and delivery, for the entire conductive surface **24**. In this regard, the plurality of zones **30** can provide ablative regions individually everywhere on conductive surface **24**.

The selectivity can be the even application of RF energy everywhere it is applied to the endometrium so that the same depth of endometrium is ablated, or the amount of applied energy can be variable, depending on the characteristics of the endometrium surface. In this instance, certain sections of the endometrium will have more tissue ablated than other sections.

Each zone **30** connects to a separate feedwire **36**, with all of the wires going to a ribbon connector **38**. Feedwires **36** are insulated. Each electrode **28** and zone **30** is wired with a constantan wire in order to receive RF energy from an RF energy source. A copper wire is connected to each constantan wire. This results in the formation of a T type thermocouple "TC".

RF power can be sequentially supplied to each electrode **28**, to feedwire **36** in ribbon connector **38**, or it can be applied to only certain selected feedwires **36**, enabling only selected electrodes **28** along with the electrolytic solution in zones **30** to deliver RF and thermal energy individually to the endometrium. In this way electrodes **28** can be multiplexed. The sizes of individual electrodes **28** are designed to provide the correct current density.

Referring now to FIG. **10**, one or more impedance monitors **40** can be used to confirm, before an ablation event, that good coupling of energy is achieved. Also included is one or more temperature monitors/sensors **42**. Thermal sensors **42** are conventional thermistors or thermocouples, and are positioned adjacent to or on electrodes **28**. Electrodes **28** are capable of monitoring circuit continuity. Impedance is monitored between each electrode **28** and zone **30** and a ground electrode when operated in a monopolar mode, or between electrodes **20** operating in a bipolar mode.

In FIG. **11**, a cross-sectional view of core lumen **16** shows that a variety of conduits, wires and fibers are housed in the lumen. These include, but are not limited to, viewing and illumination optical fibers **44**, well known to those skilled in the art, which can deliver light, such as from a Xenon source, to viewing optics **46** (FIGS. **1**(*a*), **1**(*b*) and **1**(*c*)) a tension wire **48** that connects to hinge **18**; an RF cable **50** connecting feedwires **36** to an RF source; an electrolytic solution delivery conduit **52** with associated fluid distribution port **21**; and an electrical lead **54** which couples an ultrasound energy source **56** to one or more transducers **58**.

Viewing optics **46** can be a 70 degree lens, which permits a lateral field of view. Additionally, the combination of optical fibers **44** and viewing optics **21** can be in the form of a flexible viewing scope that is capable of providing a full field of view within the interior of the uterus.

A two-way valve is included with delivery conduit **52**. A pump or other similar device advances electrolytic solution to and from expandable member **12** through delivery conduit **52**. When the procedure is completed, electrolytic solution is removed from expandable member **12** through delivery conduit **52**. Core lumen **16** is then rotated, in a twisting type of motion, in order to helically wrap the entire ablation apparatus **10**, e.g., expandable member **12** and conforming member **20** around core lumen **16**. Substantially all of the electrolytic solution is removed. Ablation apparatus **10** is then retracted back into introducer sleeve **14**. It is then removed from the uterus. Alternatively, the entire ablation apparatus **10** can be retracted directly into introducer sleeve **14**.

Referring now to FIGS. **2** and **12**, a rocker switch **60** operates the rotation and viewing of viewing optics **46**, as well as the movement of the flexible scope. A slider switch **62** controls movement of introducer sleeve **14**. Rocker switch **64** is associated with tension wire **48**. It is activated to cause hinge **18** to pivot and impart mechanical movement to expandable member **12**. Rocker switch **66** is operated by the physician to control the delivery, and in certain instances, the amount of RF energy from a suitable RF energy source **68**. Rocker switch **70** controls the flow of electrolytic solution to and from expandable member **12** to an electrolytic solution source **72**. Finally, a switch **74** is associated with ultrasound transducers **58**. It will be appreciated that a video camera system can be associated with handle **15**.

Further with regard to FIG. **12**, an optical system **76** can include a light source, associated illumination and imaging fibers **44**, which can be in the form of a flexible endoscope, and associated switch **60** that operates the rotation and viewing of viewing optics **21**. Optical system **76** can also include an output going to a VCR, camera, and the like, and a feedback output to RF source **68** and a controller **78**. RF energy source **68** can incorporate a controller, as well as both temperature and impedance monitoring devices.

Electrolytic solution source **72** can include a pump/pressure flow control device **80**, as is well known to those skilled in the art. A heating device **82**, for heating the electrolytic solution, is associated with electrolytic solution source **72**, or it can be positioned in expandable member **12**. Suitable heating devices include but are not limited to coils, bipolar electrodes, catalysts, and other devices, as are well known to those skilled in the art. An ultrasound source **84** is coupled to one or more ultrasound transducers **58** that are positioned in or on conforming member **20**. Ultrasound transducers **58** can be positioned apart from conforming member **20**. An output is associated with ultrasound source **84** and RF energy source **68**.

Each ultrasound transducer **58** can include a piezoelectric crystal mounted on a backing material. An ultrasound lens, fabricated on an electrically insulating material, is mounted between the piezoelectric crystal and conforming member **20**. The piezoelectric crystal is connected by electrical leads **54** to ultrasound power source **86**. Each ultrasound transducer **58** transmits ultrasound energy through conforming member **20** into adjacent tissue. Ultrasound transducers **58** can be in the form of an imaging probe such as Model 21362, manufactured and sold by Hewlett Packard Company, Palo Alto, Calif.

Thermal sensors **42** permit accurate determination of the surface temperature of the endometrium at conductive surface **24** adjacent to ultrasound transducers **58**. Thermal sensors **42** are in thermal proximity to the piezoelectric crystals.

As previously mentioned, ablation apparatus **10** can be used with a variety of different body organs or lumens including the uterus. Electrodes **28** and zones **30** can be activated to ablate the endometrium. Ablation apparatus **10** can be multiplexed and deliver RF and thermal energy to only certain sections of the endometrium. Each zone **30** can provide 50 watts or less of power.

Referring now to FIG. **13**, a power supply **86** feeds energy into RF power generator (source) **68** and then to ablation apparatus **10**. A multiplexer **88** measures current, voltage and temperature, at the numerous temperature sensors, going to each electrode **28** and zone **30** of ablation apparatus **10**. Electrodes **28** and zones **30** can be individually measured during an ablation event at that particular sensor. Multiplexer **88** is driven by controller **78**, which can be a digital or analog controller, or a computer with software. When controller **78** is a computer, it can include a CPU coupled through a system bus. This system can include a keyboard, a disk drive, or other non-volatile memory systems, a display, and other peripherals, as known in the art. Also coupled to the bus are a program memory and a data memory.

An operator interface **90** includes operator controls **92** and a display **94**. Controller **78** is coupled to the imaging systems, including transducers **58**, thermal sensors **42**, flexible circuit **34** (current and voltage), and viewing optics **46** and optical fibers **44**.

Current and voltage are used to calculate impedance. Temperature and impedance are measured and then treatment can begin. Preferably, only one electrode **28** and zone **30** ablates at a time. Diagnostics are done either optically or through ultrasound. Diagnostics can be performed both before ablation of the endometrium, and also after ablation as a check to ascertain the effectiveness of the treatment.

Thermal sensors **42**, and sensors contained within RF energy source **68**, measure voltage and current that is delivered to the endometrium. The output for these sensors is used by controller **78** to control the delivery of RF power. Controller **78** can also control temperature and power. An operator set level of power, and/or temperature, may be determined and this will not be exceeded. Controller **78** maintains the set level under changing conditions. The amount of RF and thermal energy delivered controls the amount of power. A profile of power delivered can be incorporated in controller **78**, as well as a pre-set amount of energy to be delivered can also be profiled.

Feedback can be the measurement of impedance or temperature. It occurs either at controller **78**, or at RF energy source **68** if it incorporates a controller. Impedance measurement can be achieved by supplying a small amount of non-therapeutic RF energy. Voltage and current are then measured to confirm electrical contact.

Circuitry, software and feedback to controller **78** result in full process control and are used to change, (i) power (modulate)—including RF, incoherent light, microwave, ultrasound and the like, (ii) the duty cycle (on-off and wattage), (iii) monopolar or bipolar energy delivery, (iv) fluid (electrolyte/saline) delivery, temperature of the fluid, flow rate and pressure and (v) determine when ablation is completed through time, temperature and/or impedance. These process variables can be controlled and varied based on tissue temperature monitored at multiple sites on the ablating surface, and impedance to current flow monitored at each electrode **28** and zone **30**, indicating changes in current carrying capability of the tissue during the ablative process. Additionally, controller **78** can provide multiplexing, monitor circuit continuity, and/or determine which electrode **28** and zone **30** is activated.

A block diagram of one embodiment of suitable processing circuitry is shown in FIG. **14**. Thermal sensors **42** and transducers **58** are connected to the input of an analog amplifier **96**. Thermal sensors **42** can be thermistors which have a resistance that varies with temperature. Analog amplifier **96** can be a conventional differential amplifier circuit for use with thermistors and transducers. The output of analog amplifier is sequentially connected by an analog multiplexer **98** to the input of an analog to digital converter **100**. The output of amplifier **96** is a voltage which represents the respective sensed temperatures. The digitized amplifier output voltages are supplied by analog to digital converter **100** to a microprocessor **102**. Microprocessor **102** calculates the temperature or impedance of the tissue. Microprocessor **102** can be a type 68000. However, it will be appreciated that any suitable microprocessor, or general purpose digital or analog computer, can be used to calculate impedance or temperature.

Microprocessor **102** sequentially receives and stores digital representations of impedance and temperature at electrodes **28** and zones **30**. Each digital value received by microprocessor **102** corresponds to different temperatures and impedances.

Calculated temperature and impedance values can be indicated on display **94**. Alternatively, or in additional to the numerical indication of temperature or impedance, calculated impedance and temperature values can be compared by microprocessor **102** with temperature and impedance limits. When the values exceed predetermined temperature or impedance values, a warning can be given on display **94**, and additionally, the delivery of RF energy to that electrode **28** and zone **30** is then multiplexed to another electrode **28** and zone **30**. A control signal from microprocessor **102** can reduce the power level supplied by RF power source **68**, or deenergize the power delivered to a particular electrode **28** and zone **30**.

Thus, controller **78** receives and stores the digital values which represent temperatures and impedances sensed. Calculated surface temperatures and impedances can be forwarded by controller **78** to display **94**. If desired, the calculated surface temperature of the endometrium is compared with a temperature limit, and a warning signal can be sent to display **94**. Similarly, a control signal can be sent to RF energy source **68** when temperature or impedance values exceed a predetermined level.

The foregoing description of preferred embodiments of the present invention has been provided for the purposes of illustration and description. It is not intended to be exhaustive or to limit the invention to the precise forms disclosed. Obviously, many modifications and variations will be apparent to practitioners skilled in this art. The embodiments were chosen and described in order to best explain the principles of the invention and its practical application, thereby enabling others skilled in the art to understand the invention for various embodiments and with various modifications as are suited to the particular use contemplated. It is intended that the scope of the invention be defined by the following claims and their equivalents.

What is claimed is:

1. An oblation apparatus for ablating an inner layer in an organ or lumen of a body, comprising:

an expandable member, made of a material with a porous exterior surface. defining an expandable member interior that contains an electrolytic solution, the expandable member releasing the electrolytic solution through the porous exterior surface;

an RF electrode;

a conforming member, with an RF conductive surface and a back side in a surrounding relationship to an exterior surface of the expandable member, made of a material that provides substantial conformity between the RF conductive surface and the inner layer, the conforming member including non-zone areas with a first porosity rate for delivering electrolytic solution to the inner layer and a zone for housing an electrode and receiving at least some of the electrolytic solution delivered to the inner layer, the zone having a second porosity rate that is less than the first porosity rate with electrolytic solution passing through the zone at a slower rate than electrolytic solution passing through non-zone areas of the conforming member; and

an RF power source coupled to the electrode.

2. The ablation apparatus of claim 1, wherein the conforming member is made of an open cell material.

3. The ablation apparatus of claim 1, wherein the conforming member is made of an open cell material, and the zone areas have less open cells than the non-zone areas.

4. The ablation apparatus of claim 3, wherein the conforming member is made of an open cell foam.

5. The ablation apparatus of claim 1, wherein the conforming member is two pieces of open cell foam material that are sealed together in the non-zone areas.

6. The ablation apparatus of claim 1, wherein the conforming member is two pieces of open cell foam material that are sealed together in the zone.

7. The ablation apparatus of claim 1, wherein the ablation apparatus includes a plurality of electrodes positioned in one of an interior or exterior of the conforming member.

8. The ablation apparatus of claim 7, wherein each electrode in the plurality of electrodes has an associated zone.

9. The ablation apparatus of claim 1, further comprising:

a groundpad electrode attached to an exterior surface of a patient.

10. The ablation apparatus of claim 1, further comprising:

an electrolytic solution source; and

a fluid delivery device for delivering electrolytic solution from the electrolytic solution source to the interior of the expandable member.

11. The ablation apparatus of claim 10 further comprising:

a device for heating the electrolytic solution coupled to the electrolytic solution source.

12. The ablation apparatus of claim 1 further comprising,

a heating device positioned in an interior of the expandable member to heat the electrolytic solution in the expandable member is heated to a desired temperature.

13. The ablation apparatus of claim 1 further comprising,

a mechanical expansion member positioned in an interior of the expandable member to mechanically expand the expandable member.

14. The ablation apparatus of claim 1, wherein the expandable member is expandable by a fluidic medium introduced into an interior of the expandable member.

15. The ablation apparatus of claim 14, wherein the fluid medium is the electrolytic solution.

16. The ablation apparatus of claim 1, wherein the expandable member is expanded mechanically with a mechanical expansion member positioned in an interior of the expandable member and with a fluidic medium introduced into the interior of the expandable member.

17. An oblation apparatus for ablating an inner layer in an organ or lumen of a body, comprising:

an expandable member, made of a material with a porous exterior surface, defining an expandable member interior that contains a heated electrolytic solution, the expandable member releasing electrolytic solution through the porous exterior surface;

a device coupled to the expandable member interior for heating the electrolytic solution to a selected temperature;

a fluid conduit with a conductive surface and a back side in a surrounding relationship to the expandable member, the fluid conduit being made of a material that provides substantial conformity between the conductive surface and the inner layer of the organ, the fluid conduit delivering heated electrolytic solution received from the interior of the expandable member to the inner layer;

a plurality of electrodes positioned in one of the fluid conduit or between the expandable member and the fluid conduit; and

an RF power source coupled to the plurality of electrodes.

18. The ablation apparatus of claim 17, further comprising: a patient return electrode coupled to the RF power source.

19. The ablation apparatus of claim 17, further comprising:

an electrolytic solution source; and

a fluid delivery device for delivering the electrolytic solution from the electrolytic solution source to the interior of the expandable member.

20. The ablation apparatus of claim 19, wherein the device for heating the electrolytic solution is associated with the electrolytic solution source.

21. The ablation apparatus of claim 19, wherein the device for heating the electrolytic solution is positioned in the interior of the expandable member.

22. The ablation apparatus of claim 17, wherein the expandable member is a mechanical expansion member positioned in an interior of the expandable member.

23. The ablation apparatus of claim 17, wherein the expandable member is a balloon.

24. The ablation apparatus of claim 17, wherein the fluid conduit is made of an open cell foam.

25. The ablation apparatus of claim 17, wherein the plurality of electrodes comprises a flexible circuit.

26. The ablation apparatus of claim 25, wherein the flexible circuit forms segments.

27. The ablation apparatus of claim 17, wherein the plurality of electrodes is positioned in the fluid conduit.

28. The ablation apparatus of claim 17, further comprising:

a feedback device coupled to the plurality of electrodes and responsive to a detected characteristic of the inner layer that provides a controlled delivery of RF energy to the plurality of electrodes.

29. An ablation apparatus for ablating an inner layer in an organ of a body comprising:

a first expandable member;

a second expandable member surrounding the first expandable member and attached thereto, the second

expandable member having a porous structure to deliver an electrolytic solution to the inner layer of the organ, the second expandable member including non-zone areas with a first porosity rate for delivering electrolytic solution to the inner layer and one or more zones each housing an electrode and receiving at least some of the electrolytic solution delivered to the inner layer, each zone having a second porosity rate that is less than the first porosity rate with electrolytic solution passing through each zone at a slower rate than electrolytic solution passing through non-zone areas of the second expandable member;

an electrical connector device connecting each electrode to an RF energy source; and

an electrolytic solution delivery device coupled to one of an interior of the first or second expandable members to deliver electrolytic solution to the interior of the second expandable member and wherein the second expandable member expands to conform to at least a portion of the inner layer of the organ.

30. The apparatus as recited in claim **29** wherein the second expandable member expands in response to the delivery of the electrolytic solution to the second expandable member.

* * * * *