UNITED STATES INTERNATIONAL TRADE COMMISSION
Washington, D.C.

In the Matter of **CERTAIN LIGHT-BASED PHYSIOLOGICAL MEASUREMENT DEVICES AND COMPONENTS THEREOF**	**Investigation No. 337-TA-1276**

COMMISSION OPINION

TABLE OF CONTENTS

I. INTRODUCTION 2
II. BACKGROUND 2
- A. Procedural History 2
- B. The Asserted Patents 7
- C. The Accused Products 13
- D. The Domestic Industry Products 14

III. COMMISSION REVIEW OF THE FINAL ID 14
IV. ANALYSIS OF THE ISSUES UNDER REVIEW 15
- A. Subject Matter Jurisdiction 15
- B. Obviousness of the Asserted Claims of the ’501 Patent, the ’502 Patent, and the ’648 Patent 16
- C. Non-Obviousness of the Asserted Claims of the ’745 Patent 49
- D. Written Description Support of Claim 28 of the ’502 Patent and Claim 12 of the ’648 Patent 53
- E. Claim Construction and Infringement Regarding the ’745 Patent 66
- F. The Domestic Industry Issues Under Review—The Poeze Patents and the ’745 Patent 66

V. REMEDY, THE PUBLIC INTEREST, AND BONDING 69
- A. Remedy 69
- B. Public Interest 76
- C. Bonding 119

VI. CONCLUSION 123

MASIMO 2003
Apple v. Masimo
IPR2024-00290

I. INTRODUCTION

On May 15, 2023, the Commission determined to review in part the final initial determination ("ID") issued by the presiding administrative law judge ("ALJ") on January 10, 2023. 88 Fed. Reg. 32243 (May 19, 2023). On review, the Commission has determined that there has been a violation of section 337 of the Tariff Act of 1930, as amended, 19 U.S.C. § 1337, with respect to U.S. Patent Nos. 10,945,648 ("the '648 patent") and 10,912,502 ("the '502 patent"), but not with respect to U.S. Patent Nos. 10,912,501 ("the '501 patent"), 10,687,745 ("the '745 patent"), and 7,761,127 ("the '127 patent"). This opinion sets forth the Commission's reasoning in support of that determination.

II. BACKGROUND

A. Procedural History

The Commission instituted this investigation on August 18, 2021, based on an amended and supplemented complaint ("Complaint") filed by complainants Masimo Corporation ("Masimo") and Cercacor Laboratories, Inc. ("Cercacor," collectively, "Complainants").[1, 2, 3] 86 Fed. Reg. 46275–76 (Aug. 18, 2021). The Complaint alleged violations of section 337 of the

---

[1] The original public complaint was filed on June 30, 2021. *See* EDIS Doc. ID 745713 (June 30, 2021). On July 7, 2021, Complainants filed an "Amendment to the Public Complaint, with Amended Exhibit 2 and Appendix C." *See* EDIS Doc. ID 746186. And on July 12, 2021, Complainants filed a "Confidential Amendment to the Public Complaint and Exhibits." *See* EDIS Doc. ID 746514. The Commission has determined that the filing date of the Complaint is July 12, 2021. *See, e.g.*, 86 Fed. Reg. at 46275; Final ID at 84 (including n.24).

[2] Supplement to the Confidential Amended Complaint and Exhibits, EDIS Doc. ID 747244 (July 19, 2021); Supplement to the Amended Public Complaint and Exhibits, EDIS Doc. ID 747240 (July 19, 2021).

[3] Masimo is the owner of the '501 patent (JX-0001), '502 patent (JX-0002), '648 patent (JX-0003), and '745 patent (JX-0009). Compl. at ¶ 4. Cercacor is the owner of the '127 patent (JX-0007). *Id*. Masimo and Cercacor have rights to each of the Asserted Patents through a cross-licensing agreement. *Id.* at ¶¶ 4, 77; CX-1612C.

MASIMO 2003
Apple v. Masimo
IPR2024-00290

Tariff Act of 1930, as amended, 19 U.S.C. § 1337, based upon the importation into the United States, the sale for importation, and the sale within the United States after importation of certain light-based physiological measurement devices and components thereof by reason of infringement of certain claims of the ’501 patent; the ’502 patent; the ’648 patent; the ’745 patent; and the ’127 patent (collectively, the “Asserted Patents”). *Id*. The Complaint further alleged that an industry in the United States exists and/or is in the process of being established. *Id*. The notice of investigation named Apple Inc. of Cupertino, California as the sole respondent (“Apple”). *Id.* at 46276. The Office of Unfair Import Investigations is not participating in this investigation. *See id.*

Prior to the issuance of the Final ID, the investigation terminated as to several claims. Order No. 25 (Mar. 23, 2022), *unreviewed by* Comm’n Notice (Apr. 12, 2022); Order No. 33 (May 20, 2022), *unreviewed by* Comm’n Notice (June 10, 2022). At the time of the hearing on June 6–10, 2022, only the following claims remained at issue: claim 12 of the ’501 patent, claims 22 and 28 of the ’502 patent, claims 12, 24, and 30 of the ’648 patent, claims 9, 18,[4] and 27 of the ’745 patent, and claim 9 of the ’127 patent.

[4] Complainants proceeded at the hearing as to claim 18 of the ’745 patent for domestic industry purposes only. *See, e.g.*, Final ID at 176. In other words, Complainants did not allege that Apple violated section 337 by infringing that claim.

MASIMO 2003
Apple v. Masimo
IPR2024-00290

On May 13, 2022, Complainants and Apple filed their pre-hearing briefs.[5] The parties filed initial post-hearing briefs on June 27, 2022,[6] and the parties filed post-hearing reply briefs on July 11, 2022.[7]

On January 10, 2023, the ALJ issued the Final ID,[8] which found that Apple violated section 337 as to only claims 24 and 30 of the '648 patent. *See* Final ID at 335–36. The Final ID found that Complainants did not establish a violation as to the other remaining asserted claims. *E.g.*, *id.*

On January 24, 2023, the ALJ issued the Recommended Determination on Remedy and Bonding ("RD").[9] The RD recommended that, if the Commission finds a violation, it should

---

[5] Complainants' Pre-Hearing Brief, EDIS Doc. ID 770786 (May 13, 2022) ("CPreHBr."); Respondent Apple Inc.'s Pre-Hearing Brief, EDIS Doc. ID 770790 (May 13, 2022). On May 16, 2022, Apple filed a corrected pre-hearing brief. Respondent Apple Inc.'s Corrected Pre-Hearing Brief, EDIS Doc. ID 770874 (May 16, 2022) ("RPreHBr.").

[6] Complainants' Initial Post-Hearing Brief, EDIS Doc. ID 774000 (June 27, 2022); Respondent Apple Inc.'s Post-Hearing Brief, EDIS Doc. ID 774025 (June 27, 2022). On July 14, 2022, Complainant filed a corrected opening post-hearing brief. Complainants' Corrected Initial Post-Hearing Brief, EDIS Doc. ID 775422 (July 14, 2022) ("CPHBr."). On September 2, 2022, Apple filed a second corrected opening post-hearing brief. Respondent Apple Inc.'s Second Corrected Post-Hearing Brief, EDIS Doc. ID 779376 (Sept. 2, 2022) ("RPHBr.").

[7] Complainants' Reply Post-Hearing Brief, EDIS Doc. ID 775058 (July 11, 2022) ("CPHBr. (Reply)"); Respondent Apple Inc.'s Reply Post-Hearing Brief, EDIS Doc. ID 775073 (July 11, 2022). On September 2, 2022, Apple filed a corrected post-hearing reply brief. Respondent Apple Inc.'s Corrected Post-Hearing Reply Brief, EDIS Doc. ID 779379 (Sept. 2, 2022) ("RPHBr. (Reply)").

[8] Final Initial Determination on Violation of Section 337, EDIS Doc. ID 787653 (Jan. 10, 2023); *see also* Final Initial Determination on Violation of Section 337, EDIS Doc. ID 789795 (Feb. 7, 2023) (Public Version).

[9] Recommended Determination on Remedy and Bonding, EDIS Doc. ID 788506 (Jan. 24, 2023); *see also* Recommended Determination on Remedy and Bonding, EDIS Doc. ID 790079 (Feb. 10, 2023) (Public Version).

MASIMO 2003
Apple v. Masimo
IPR2024-00290

issue a limited exclusion order ("LEO") directed to certain wearable electronic devices with light-based pulse oximetry functionality and components thereof that are imported, sold for importation, and/or sold after importation by Apple; and a cease and desist order ("CDO") directed to Apple. *See* RD at 2–5. The RD additionally recommended that the Commission set a 0% bond (*i.e.*, no bond) during the sixty-day period of Presidential review. *See id.* at 6–7. The Commission's notice of investigation did not instruct the ALJ to make findings and recommendations concerning the public interest. *See* 86 Fed. Reg. at 46275–76.

On January 23, 2023, Complainants and Apple each filed a petition for review of the Final ID.[10] On January 31, 2023, Complainants and Apple each filed responses to the other respective petition.[11]

On January 24 and 30, 2023, (after the Final ID issued and petitions for review were filed), the United States Patent and Trademark Office ("USPTO") denied Apple's request for the institution of *inter partes* review proceedings ("IPRs") as to the '501, '502, and '648 patents based on a combination of references that included the same primary reference as one of the

---

[10] Complainants' Petition for Review of the Final Initial Determination on Violation of Section 337, EDIS Doc. ID 788456 (Jan. 23, 2023) ("CPet."); Complainants' Summary of Petition for Review of the Final Initial Determination on Violation of Section 337, EDIS Doc. ID 788457 (Jan. 23, 2023); Respondent Apple Inc.'s Petition for Review of the Initial Determination of Violation of Section 337, EDIS Doc. ID 788470 (Jan. 23, 2023) ("RPet."); Respondent Apple Inc.'s Summary of Petition for Review of the Initial Determination of Violation of Section 337, EDIS Doc. ID 788474 (Jan. 23, 2023).

[11] Complainants' Response to Apple Inc.'s Petition for Review of the Final Initial Determination on Violation of Section 337, EDIS Doc. ID 789044 (Jan. 31, 2023) ("CResp."); Complainants' Summary of Response to Apple Inc.'s Petition for Review of the Final Initial Determination on Violation of Section 337, EDIS Doc. ID 789045 (Jan. 31, 2023); Respondent Apple Inc.'s Response to Complainants' Petition for Review, EDIS Doc. ID 789061 (Jan. 31, 2023) ("RResp."); Respondent Apple Inc.'s Summary of Its Response to Complainants' Petition for Review, EDIS Doc. ID 789067 (Jan. 31, 2023).

MASIMO 2003
Apple v. Masimo
IPR2024-00290

combinations of references asserted against the asserted claims of those patents in this investigation. *See Apple Inc. v. Masimo Corp.*, IPR2022-01272 (USPTO Jan. 24, 2023) ('501 patent) (available at CResp. at Appx. B); *Apple Inc. v. Masimo Corp.*, IPR2022-01274 (USPTO Jan. 24, 2023) ('502 patent) (available at CResp. at Appx. C); *Apple Inc. v. Masimo Corp.*, IPR2022-01276 (USPTO Jan. 30, 2023)) ('648 patent) (available at CResp. at Appx. A).

On February 23, 2023, the parties filed their public interest statements pursuant to 19 C.F.R. § 210.50(a)(4).[12] The Commission received numerous comments on the public interest from non-parties, discussed below in the public interest section of this Opinion.

On May 15, 2023, after considering the parties' petitions and responses thereto, the Commission determined to review the Final ID in part. *See* 88 Fed. Reg. at 32243–46. In particular, the Commission determined to review: (1) the domestic industry with regard to the '501 patent, the '502 patent, the '648 patent, and the '745 patent; (2) obviousness with regard to the '501 patent, the '502 patent, the '648 patent, and the '745 patent; (3) written description with regard to claim 28 of the '502 patent and claim 12 of the '648 patent; (4) claim construction and infringement with regard to the '745 patent; and (5) subject matter jurisdiction. *Id.* at 32244. The Commission determined not to review the remaining findings of the Final ID, including the finding of no violation as to the '127 patent. *Id.* The Commission requested briefing on certain issues under review and also on remedy, the public interest, and bonding. *See id.* at 32244-46. The Commission's public interest briefing request also solicited input from non-parties. *See id*.

[12] Complainants' Statement on the Public Interest, EDIS Doc. ID 791050 (Feb. 23, 2023) ("CStmt."); Respondent Apple Inc.'s Public Interest Statement, EDIS Doc. ID 791062 (Feb. 23, 2023) ("RStmt.").

MASIMO 2003
Apple v. Masimo
IPR2024-00290

On June 5, 2023, the parties filed their written submissions on the issues under review and on remedy, public interest, and bonding,[13] and on June 12, 2023, the parties filed their reply submissions.[14] The Commission additionally received numerous comments on the public interest from non-parties, which are discussed below in the public interest section of this Opinion.

B. The Asserted Patents

The technology at issue in this investigation relates to user-worn devices for noninvasively measuring physiological parameters of a user.

1. U.S. Patent Nos. 10,912,501; 10,912,502; and 10,945,648: The "Poeze Patents"

The '501 patent (JX-0001), '502 patent (JX-0002), and '648 patent (JX-0003) share a common specification, claiming priority to an application filed on July 3, 2008. These patents are titled "User-Worn Device for Noninvasively Measuring a Physiological Parameter of a User" and name as inventors Jeroen Poeze, *et al*. These patents are referred to herein as the "Poeze patents."

---

[13] Complainants' Submission in Response to the Commission's May 15, 2023 Notice of Commission Determination to Review in Part, EDIS Doc ID 797853 (June 5, 2023) ("CBr."); Respondent Apple Inc.'s Response to the Commission's Notice to Review in Part a Final Initial Determination and Request for Written Submissions, EDIS Doc ID 797870 (June 5, 2023) ("RBr.").

[14] Complainants' Reply to Apple Inc.'s Response to the Commission's Notice to Review in Part a Final Initial Determination and Request for Written Submissions, EDIS Doc ID 798353 (June 12, 2023) ("CBr. (Reply)"); Respondent Apple Inc.'s Reply to Complainants' Response to the Commission's Notice to Review in Part a Final Initial Determination and Request for Written Submissions, EDIS Doc ID 798383 (June 12, 2023) ("RBr. (Reply)").

MASIMO 2003
Apple v. Masimo
IPR2024-00290

Complainants assert claim 12 of the '501 patent, which depends from claim 1. *See* CPHBr. at 53-66. Claim 12 is reproduced below in a claim/element identifier chaii that includes the element designations used by the pa1iies and the Final ID.

U.S. Patent No. 10,912,501	
Identifier	**Claim/Element**
Claim 12	
[1PRE]	A user-worn device configured to noninvasively measure a physiological pai·ameter of a user, the user-worn device comprising:
[1A]	at least three light emitting diodes (LEDs);
[1B]	at least three photodiodes aiTanged on an interior surface of the user-worn device and configured to receive light attenuated by tissue of the user;
[1C]	a protrusion aiTanged over the interior surface, the protrnsion comprising a convex surface and
[1D]	a plurality of openings extending through the protrusion and positioned over the three photodiodes,
[1E]	the openings each comprising an opaque lateral surface, the plurality of openings configured to allow light to reach the photodiodes, the opaque lateral surface configured to avoid light piping through the protrusion; and
[1F]	one or more processors configured to receive one or more signals from the photodiodes and calculate a measurement of the physiological parameter of the user.
[12]	The user-worn device of Claim 1, wherein the convex surface of the protrusion is an oute1most surface configured to contact the tissue of the user and confo1m the tissue into a concave shape.

Complainants also asse1i claim 22 of the '502 patent, which depends from claims 19, 20, and 21, and claim 28, a sepai·ate independent claim. *See* CPHBr. at 66-77. These claims are reproduced below.

MASIMO 2003
Apple v. Masimo
IPR2024-00290

U.S. Patent No. 10,912,502	
Identifier	**Claim/Element**
Claim 22	
[19PRE]	A user-worn device configured to non-invasively measure an oxygen saturation of a user, the user worn device comprising:
[19A]	a plurality of emitters configured to emit light, each of the emitters comprising at least two light emitting diodes (LEDs);
[19B]	four photodiodes ananged within the user-worn device and configured to receive light after at least a po1iion of the light has been attenuated by tissue of the user;
[19C]	a protrusion comprising a convex surface including separate openings extending through the protrusion and lined with opaque material, each opening positioned over a different one of the four photodiodes, the opaque material configured to reduce an amount of light reaching the photodiodes without being attenuated by the tissue;
[19D]	optically transparent material within each of the openings; and
[19E]	one or more processors configured to receive one or more signals from at least one of the four photodiodes and output measurements responsive to the one or more signals, the measurements indicative of the oxygen saturation of the user.
[20]	The user-worn device of claim 19 further comprising a thennistor.
[21]	The user-worn device of claim 20, wherein the one or more processors are fuiiher configured to receive a temperature signal from the thennistor and adjust operation of the user-worn device responsive to the temperature signal.
[22]	The user-worn device of claim 21, wherein the plurality of emitters comprise at least four emitters, and wherein each of the plurality of emitters comprises a respective set of at least three LEDs.

U.S. Patent No. 10,912,502	
Identifier	**Claim/Element**
Claim 28	
[28PRE]	A user-worn device configured to non-invasively measure an oxygen saturation of a user, the user worn device comprising:
[28A]	a first set of light emitting diodes (LEDs), the first set of LEDs comprising at least an LED configured to emit light at a first wavelength and an LED configured to emit light at a second wavelength;
[28B]	a second set of LEDs spaced apa1t from the first set of LEDs, the second set of LEDs comprising at least an LED configured to emit light at the first wavelength and an LED configured to emit light at the second wavelength;
[28C]	four photodiodes ananged in a quadrant configuration on an interior surface of the user-worn device and configured to receive light after at least a po1tion of the light has been attenuated by tissue of the user;
[28D]	a thermistor configured to provide a temperature signal;
[28E]	a protrusion ananged above the interior smface, the protr11sion comprising: a convex surface;
[28F]	a plurality of openings in the convex surface, extending through the protrusion, and aligned with the four photodiodes, each opening defined by an opaque surface configured to reduce light piping; and
[28G]	a plurality of u-ansmissive windows, each of the tr·ansmissive windows extending across a different one of the openings;
[28H]	at least one opaque wall extending between the interior surface and the protr11sion, wherein at least the interior surface, the opaque wall and the protr11sion fonn cavities, wherein the photodiodes are ananged on the interior surface within the cavities;
[281]	one or more processors configured to receive one or more signals from at least one of the photodiodes and calculate an oxygen saturation measurement of the user, the one or more processors fmther configured to receive the temperature signal;
[28J]	a network interface configured to wirelessly communicate the oxygen saturation measurement to at least one of a mobile phone or an electr·onic network;
[28K]	a user interface comprising a touch-screen display, wherein the user interface is configured to display indicia responsive to the oxygen saturation measurement of the user;
[28L]	a storage device configured to at least temporarily store at least the measurement; and
[28M]	a su-ap configured to position the user-worn device on the user.

Complainants further asse1t claim 12 of the '648 patent, which depends from claim 8, and claims 24 and 30, which depend from claim 20. *See* CPHBr. at 77-83. These claims are reproduced below.

U.S. Patent No. 10,945,648	
Identifier	**Claim/Element**
Claim 12	
[8PRE]	A user-worn device configured to non-invasively dete1mine measurements of a physiological parameter of a user, the user-worn device comprising:
[SA]	a first set of light emitting diodes (LEDs), the first set comprising at least an LED configured to emit light at a first wavelength and at least an LED configured to emit light at a second wavelength;
[8B]	a second set of LEDs spaced apa1t from the first set of LEDs, the second set of LEDs comprising an LED configured to emit light at the first wavelength and an LED configured to emit light at the second wavelength;
[SC]	four photodiodes;
[8D]	a protrusion comprising a convex surface, at least a po1tion of the protrusion comprising an opaque material;
[SE]	a plurality of openings provided through the protr11sion and the convex surface, the openings aligned with the photodiodes;
[SF]	a separate optically tr·ansparent window extending across each of the openings;
[8G]	one or more processors configured to receive one or more signals from at least one of the photodiodes and output measurements of a physiological parameter of a user;
[SH]	a housing; and
[81]	a strap configured to position the housing proximate tissue of the user when the device is worn.
[12]	The user-worn device of Claim 8, wherein the physiological parameter comprises oxygen or oxygen saturation.

U.S. Patent No. 10,945,648	
Identifier	**Claim/Element**
Claims 24 and 30	
[20PRE]	A user-worn device configured to non-invasively dete1mine measurements of a user's tissue, the user-worn device comprising:
[20A]	a plurality of light emitting diodes (LEDs);
[20B]	at least four photodiodes configured to receive light emitted by the LEDs, the four photodiodes being airnnged to capture light at different quadrants of tissue of a user;
[20C]	a protrusion comprising a convex surface and
[20D]	a plurality of through holes, each through hole including a window and manged over a different one of the at least four photodiodes; and
[20E]	one or more processors configured to receive one or more signals from at least one of the photodiodes and detennine measurements of oxygen saturation of the user.
[24]	The user-worn device of Claim 20, wherein the protrusion comprises opaque material configured to substantially prevent light piping.
[30]	The user-worn device of Claim 20, wherein the protrusion further comprises one or more chainfered edges.

2. U.S. Patent No. 10,687,745

The '745 patent (JX-0009) is titled "Physiological Monitoring Devices, Systems, and Methods," claims priority to an application filed on June 28, 2016, and names Ammar Al-Ali as the sole inventor. Complainants asse1i that Apple infringes claims 9 and 27, and they rely on claim 18 for domestic industry purposes only. Claim 9 is reproduced below as representative of the asse1ied claims of the '745 patent.

U.S. Patent No. 10,687,745	
Identifier	**Claim/Element**
Claim 9	
[1PRE]	A physiological monitoring device comprising:
[1A]	a plurality of light-emitting diodes configured to emit light in a first shape;
[1B]	a material configured to be positioned between the plurality of light-emitting diodes and tissue on a wrist of a user when the physiological monitoring device is in use, the material configured to change the first shape into a second shape by which the light emitted from one or more of the plurality of light-emitting diodes is projected towards the tissue;
[1C]	a plurality of photodiodes configured to detect at least a po1iion of the light after the at least the po1iion of the light passes through the tissue, the plurality of photodiodes finiher configured to output at least one signal responsive to the detected light;
[1D]	a surface comprising a dark-colored coating, the surface configured to be positioned between the plurality of photodiodes and the tissue when the physiological monitoring device is in use, wherein an opening defined in the dark-colored coating is configured to allow at least a po1iion of light reflected from the tissue to pass through the surface;
[1E]	a light block configured to prevent at least a po1iion of the light emitted from the plurality of light-emitting diodes from reaching the plurality of photodiodes without first reaching the tissue;
[1F]	and a processor configured to receive and process the outputted at least one signal and detennine a physiological parameter of the user responsive to the outputted at least one signal.
[9]	The physiological monito1ing device of claim 1, wherein the physiological parameter comprises oxygen saturation.

3. U.S. Patent No. 7,761,127

The '127 patent (JX-0007) is titled "Multiple Wavelength Sensor Substrate," issued from an application filed on March 1, 2006, and names as inventors Ammar Al-Ali, *et al.* Complainants asse1i claim 9 of the '127 patent, which depends from claim 7.

C. The Accused Products

Complainants accuse certain Apple Watches of infringing the Asse1ied Patents, including the Apple Watch Series 6, the Apple Watch Series 7, and ce1iain prototype Apple Watch

products with project names [redacted] (collectively, the "Accused Products"). CPHBr. at 37–39. The parties have stipulated that the Accused Products are materially identical for the purposes of infringement in this investigation. *See* Joint Stipulation of Facts at ¶¶ 11–13, EDIS Doc. ID 770692 (May 13, 2022); CX-1259C at ¶¶ 7–8. Notably, the parties do not dispute that the currently-existing Apple Watch Series SE does not infringe the Asserted Patents because it is not equipped to measure the blood oxygen saturation of a user.

D. The Domestic Industry Products

With respect to the '501, '502, '648, and '745 patents, Complainants rely on their "Masimo Watch" products. CPHBr. at 26–35. These Masimo Watch products include certain prototypes identified as the "Circle Sensor" (CPX-0021C), the "Wings Sensor" (CPX-0029C), the "RevA Sensor" (CPX-0052C), the "RevD Sensor" (CPX-0058C), the "RevE Sensors" (CPX-0019C, CPX-0020C, CPX-0065C) (collectively, the "Masimo Watch Prototypes"), and a product identified as the "W1 Watch" (CPX-0146C). CPHBr. at 30–35. The Masimo Watch Prototypes were developed as part of an iterative design process that resulted in the W1 Watch, which was not completed until after the Complaint was filed. *Id.* at 62 n.16, 18.

With respect to the '127 patent, Complainants rely on certain of Masimo's "Rainbow® Sensors." *Id.* at 36.

III. COMMISSION REVIEW OF THE FINAL ID

When the Commission reviews an initial determination, in whole or in part, it reviews the determination *de novo*. *Certain Soft-Edged Trampolines & Components Thereof*, Inv. No. 337-TA-908, Comm'n Op. at 4 (May 1, 2015). Upon review, the "Commission has 'all the powers which it would have in making the initial determination,' except where the issues are limited on notice or by rule." *Certain Flash Memory Circuits & Prods. Containing Same*, Inv. No. 337-TA-382, USITC Pub. No. 3046, Comm'n Op. at 9–10 (July 1997) (quoting *Certain Acid-Washed*

MASIMO 2003
Apple v. Masimo
IPR2024-00290

Denim Garments & Accessories, Inv. No. 337-TA-324, Comm'n Op. at 5 (Nov. 1992)). With respect to the issues under review, "the Commission may affirm, reverse, modify, set aside or remand for further proceedings, in whole or in part, the initial determination of the administrative law judge." 19 C.F.R. § 210.45(c). The Commission also "may take no position on specific issues or portions of the initial determination," and "may make any findings or conclusions that in its judgment are proper based on the record in the proceeding." *Id.*; *see also Beloit Corp. v. Valmet Oy*, 742 F.2d 1421, 1423 (Fed. Cir. 1984).

IV. ANALYSIS OF THE ISSUES UNDER REVIEW

The Commission's findings, conclusions, and supporting analysis follow. The Commission affirms and adopts the ID's findings, conclusions, and supporting analysis that are not inconsistent with the Commission's opinion.

A. Subject Matter Jurisdiction

The Final ID found that the Commission has "subject matter jurisdiction over this investigation." Final ID at 336. The Commission reviewed this finding. 88 Fed. Reg. at 32244. On review, the Commission vacates the Final ID's "subject matter jurisdiction" finding and instead finds that the Commission has statutory authority, rather than subject matter jurisdiction, over the present investigation. *See Certain Video Security Equipment & Sys., Related Software, Components Thereof, & Prods. Containing Same*, Inv. No. 337-TA-1281, Comm'n Op. at 9–10 (Apr. 19, 2023). The Commission and ALJs have used the term "jurisdiction" in the past as a shorthand for statutory authority. Executive agencies, of course, do not have jurisdiction, but rather are creatures of statute that cannot exceed their statutory authority.

MASIMO 2003
Apple v. Masimo
IPR2024-00290

B. Obviousness of the Asserted Claims of the ’501 Patent, the ’502 Patent, and the ’648 Patent

The Final ID found that claim 12 of the ’501 patent would have been invalid as obvious over combinations of references primarily based on “Lumidigm,”[15] but claims 22 and 28 of the ’502 patent and claims 12, 24, and 30 of the ’648 patent would not have been invalid as obvious over those combinations. *E.g.*, Final ID at 88, 336. The Commission reviewed this finding. 88 Fed. Reg. at 32244. On review, the Commission affirms the Final ID’s conclusions as to obviousness with the modifications and supplements discussed herein.

1. The Applicable Law

A party cannot be held liable for infringement if the asserted patent claim is invalid. *See Pandrol USA, LP v. AirBoss Ry. Prods., Inc.*, 320 F.3d 1354, 1365 (Fed. Cir. 2003). Patent claims are presumed valid (35 U.S.C. § 282), so a respondent challenging validity must overcome this statutory presumption by “clear and convincing” evidence of invalidity. *Checkpoint Sys., Inc. v. Int’l Trade Comm’n*, 54 F.3d 756, 761 (Fed. Cir. 1995). One such ground for invalidity is that the claimed invention would have been obvious under 35 U.S.C. § 103.

Under 35 U.S.C. § 103(a), a patent is valid unless “the differences between the subject matter sought to be patented and the prior art are such that the subject matter as a whole would have been obvious at the time the invention was made” to a person having ordinary skill in the art. 35 U.S.C. § 103(a). The ultimate question of obviousness is a question of law, but “it is well understood that there are factual issues underlying the ultimate obviousness decision.”

---

[15] U.S. Patent No. 7,620,212 (RX-0411), titled “Electro-Optical Sensor,” which issued from an application filed on August 12, 2003.

MASIMO 2003
Apple v. Masimo
IPR2024-00290

Richardson-Vicks Inc. v. Upjohn Co., 122 F.3d 1476, 1479 (Fed. Cir. 1997) (citing *Graham v. John Deere Co.*, 383 U.S. 1, 17 (1966)).

After claim construction:

> The second step in an obviousness inquiry is to determine whether the claimed invention would have been obvious as a legal matter, based on underlying factual inquiries including: (1) the scope and content of the prior art, (2) the level of ordinary skill in the art, (3) the differences between the claimed invention and the prior art, and (4) secondary considerations of non-obviousness.

Smiths Indus. Med. Sys., Inc. v. Vital Signs, Inc., 183 F.3d 1347, 1354 (Fed. Cir. 1999) (citing *Graham*, 383 U.S. at 17). The existence of secondary considerations, or objective indicia of non-obviousness, does not control the obviousness determination, because a court (and the Commission) must consider "the totality of the evidence" before reaching a decision on obviousness. *Richardson-Vicks*, 122 F.3d at 1483.

The Supreme Court clarified the obviousness inquiry in *KSR Int'l Co. v. Teleflex Inc.*, 550 U.S. 389 (2007). There, the Supreme Court said:

> When a work is available in one field of endeavor, design incentives and other market forces can prompt variations of it, either in the same field or a different one. If a person of ordinary skill can implement a predictable variation, § 103 likely bars its patentability. For the same reason, if a technique has been used to improve one device, and a person of ordinary skill in the art would recognize that it would improve similar devices in the same way, using the technique is obvious unless its actual application is beyond his or her skill. *Sakraida*[16] and *Anderson's-Black Rock*[17] are illustrative—a court must ask whether the improvement is more than the predictable use of prior art elements according to their established functions.
>
> Following these principles may be more difficult in other cases than it is here because the claimed subject matter may involve more than the simple

---

[16] *Sakraida v. Ag Pro, Inc.*, 425 U.S. 273 (1976).

[17] *Anderson's-Black Rock, Inc. v. Pavement Salvage Co.*, 396 U.S. 57 (1969).

MASIMO 2003
Apple v. Masimo
IPR2024-00290

> substitution of one known element for another or the mere application of a known technique to a piece of prior art ready for the improvement. Often, it will be necessary for a court to look to interrelated teachings of multiple patents; the effects of demands known to the design community or present in the marketplace; and the background knowledge possessed by a person having ordinary skill in the art, all in order to determine whether there was an apparent reason to combine the known elements in the fashion claimed by the patent at issue. To facilitate review, this analysis should be made explicit.
>
> . . .
>
> The obviousness analysis cannot be confined by a formalistic conception of the words teaching, suggestion, and motivation, or by overemphasis on the importance of published articles and the explicit content of issued patents. The diversity of inventive pursuits and of modern technology counsels against limiting the analysis in this way. In many fields it may be that there is little discussion of obvious techniques or combinations, and it often may be the case that market demand, rather than scientific literature, will drive design trends. Granting patent protection to advances that would occur in the ordinary course without real innovation retards progress and may, in the case of patents combining previously known elements, deprive prior inventions of their value or utility.

KSR, 550 U.S. at 417–19.

The Federal Circuit has since held that when a patent challenger contends that a patent is invalid for obviousness based on a combination of several prior art references, "the burden falls on the patent challenger to show by clear and convincing evidence that a person of ordinary skill in the art would have had reason to attempt to make the composition or device, or carry out the claimed process, and would have had a reasonable expectation of success in doing so." *PharmaStem Therapeutics, Inc. v. ViaCell, Inc.*, 491 F.3d 1342, 1360 (Fed. Cir. 2007) (citations omitted).

> The TSM[18] test, flexibly applied, merely assures that the obviousness test proceeds on the basis of evidence—teachings, suggestions (a tellingly broad term), or motivations (an equally broad term)—that arise before the

[18] "TSM" is an acronym for "teaching, suggestion, or motivation."

MASIMO 2003
Apple v. Masimo
IPR2024-00290

> time of invention as the statute requires. As *KSR* requires, those teachings, suggestions, or motivations need not always be written references but may be found within the knowledge and creativity of ordinarily skilled artisans.

Ortho-McNeil Pharm., Inc. v. Mylan Labs., Inc., 520 F.3d 1358, 1365 (Fed. Cir. 2008).

2. Introduction

a. Lumidigm

Lumidigm is titled "Electro-Optical Sensor." *See* RX-0411 (Lumidigm). Lumidigm's Abstract is reproduced below:

> Methods and systems are provided that extend the functionality of electro-optical sensors. A device has . . . multiple light sources, a light detector, and a processor configured to operate the light sources and the light detector to perform distinct functions. At least one of the distinct functions includes a biometric identification function in which light is propagated from the plurality of light sources through presented material. The propagated light is received with the light detector, with the presented material being identified from the received light. Another of the distinct functions includes a nonidentification function performed with the light sources and the light detector.

RX-0411 (Lumidigm) at Abstract.

Figure 2 of Lumidigm is reproduced below:

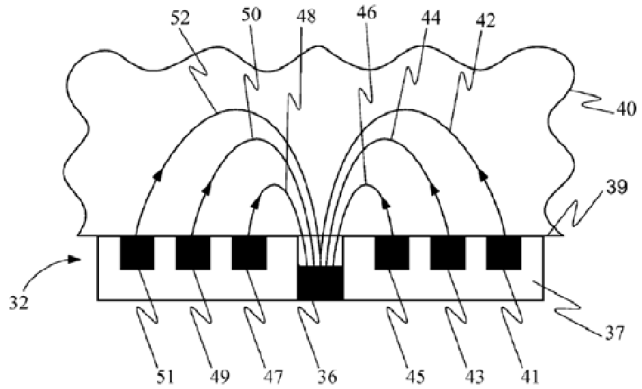

FIG. 2

RX-0411 (Lumidigm) at Fig. 2. Figure 2 depicts a "cross-sectional view of a biometric sensor element couple[d] to a tissue surface showing multiple mean optical paths." *Id.* at 4:45–47.

Sensor head 32 includes light sources 41, 43, 45, 47, 49, and 51 and detector 36. *Id.* at 7: 5–10. These light sources correspond to the claimed "LEDs," and detector 36 corresponds to a claimed "photodiode." Optical paths 42, 44, 46, 48, 50, and 52 show light passing through tissue 40 of a user. *Id.* Sensor head 32 is formed of optically opaque material 37, corresponding to the claimed "opaque material."

Figures 6 and 7A of Lumidigm are reproduced below:

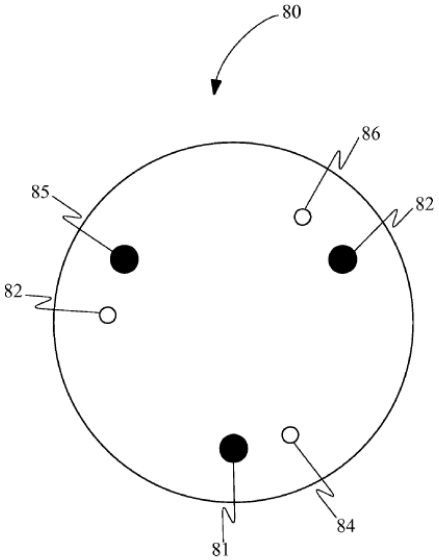

FIG. 6

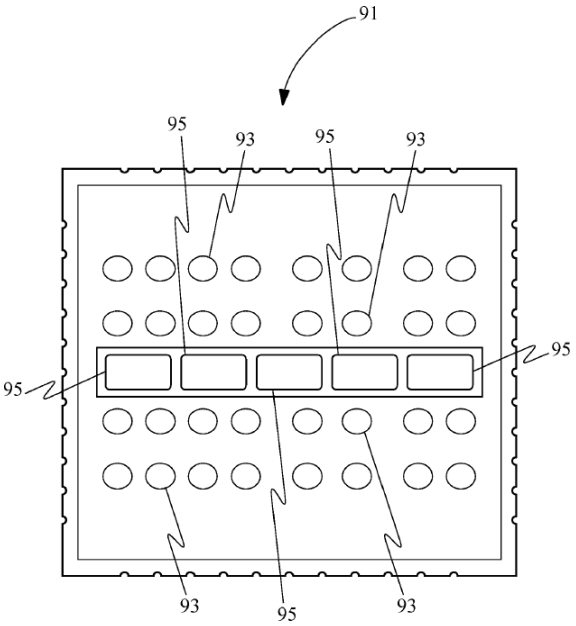

FIG. 7A

RX-0411 (Lumidigm) at Figs. 6 and 7A. Figures 6 and 7A illustrate top-views of biometric sensors according to two embodiments of the invention. *Id.* at 4:60–67. In Figure 6, biometric sensor 80 includes light sources/LEDs 82, 84, and 86 positioned relative to detectors/photodiodes

81, 83,[19] and 85. *Id.* at 9:14–17. In Figure 7A, biometric sensor 91 includes four rows of light sources/LEDs 93 and one row of detectors/photodiodes 95. *Id.* at 9:27–30.

Figure 8B, reproduced below, depicts a wrist-watch embodiment:

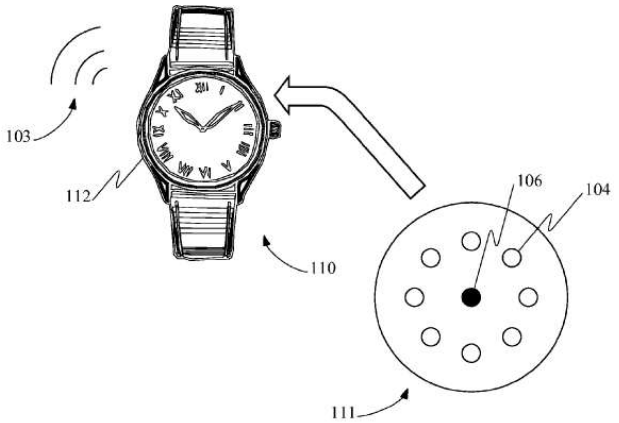

FIG. 8B

RX-0411 (Lumidigm) at Fig. 8B (depicting biometric system 110 including wristwatch 112, biometric reader 111, illumination system 104, and detection/diode system 106).

b. Summary of the Commission's Conclusions

As noted above, the Final ID found that claim 12 of the '501 patent would have been invalid as obvious over combinations of references primarily based on Lumidigm, but claims 22 and 28 of the '502 patent and claims 12, 24, and 30 of the '648 patent would not have been invalid as obvious over those combinations. *E.g.*, Final ID at 88, 336. The Commission reviewed this finding. 88 Fed. Reg. at 32244.

On review, the Commission affirms the Final ID's findings as to *prima facie* obviousness of claim 12 of the '501 patent in its entirety. *See* Final ID at 89–113. Secondary considerations are discussed separately below.

---

[19] The item number "82" for the dark circle at approximately 2 o'clock of Figure 6 is a typographical error. It is apparent that that item number was intended to be "83."

Regarding claim 28 of the ’502 patent and claims 12, 24, and 30 of the ’648 patent, these claims recite, *inter alia*, a “user-worn device” comprising (1) “four photodiodes,” (2) a “protrusion,” (3) an “opening” or “through hole” “extending through” or “provided through” the protrusion and “aligned with” or “over” each of the four photodiodes, and (4) a separate “transmissive window” or “optically transparent material” “extending across” or “arranged over” each of the openings or though holes. *See* JX-0002 (’502 patent) at claim 28, elements [28C], [28E], [28F], and [28G]; JX-0003 (’648 patent) at claim 12, elements [8C], [8D], [8E], and [8F], and claims 24 and 30, elements [20B], [20C], and [20D]. Claim 22 of the ’502 patent is similar, but more narrowly requires that an “optically transparent material” be included “*within* each of the openings.” *See* JX-0002 (’502 patent) at claim 22, elements [19B], [19C], and [19D].

The Commission concludes that Lumidigm and combinations of references therewith teach or suggest (1) the four photodiodes, and (2) the protrusion, but the combinations of references do not teach or suggest (4) a separate transmissive window or optically transparent material within, extending across, or over each of the openings or though holes. The Commission, however, takes no position on the Final ID’s finding that the combinations of references do not teach or suggest (3) an opening or through hole extending through or provided through the protrusion and aligned with or over each of the four photodiodes. *See Beloit*, 742 F.2d at 1423. In doing so, the Commission slightly modifies the Final ID, as discussed below.

Regarding claims 22 and 28 of the ’502 patent and claims 12, 24, and 30 of the ’648 patent, these claims also recite, *inter alia*, various limitations directed at the claimed user-worn devices being configured to measure the oxygen saturation of the user. JX-0002 (’502 patent) at claim 22, elements [19PRE] and [19E], and at claim 28, elements [28PRE], [28I], [28J], and

MASIMO 2003
Apple v. Masimo
IPR2024-00290

[28K]; JX-0003 ('648 patent) at claim 12, elements [12], and claims 24 and 30, element [20E].[20] The Final ID found that neither Lumidigm nor combinations therewith teach or suggest these claim limitations. *See* Final ID at 113–18, 124, 128, 132–33, 140, 142. The Final ID also found that element [24] of claim 24 of the '648 patent was not taught or suggested by Lumidigm or combinations of references therewith. *See id.* at 142–44. The Commission affirms these findings for the reasons given in the Final ID.

Regarding the Final ID's analysis of objective indicia of non-obviousness, the Commission alters the Final ID's findings as to commercial success, and it does so by affirming those findings with the modifications discussed below.

Because the Commission modifies or supplements the Final ID's findings as to the *prima facie* obviousness and/or secondary considerations of these claims, the Commission evaluates anew (1) the scope and content of the prior art, (2) the level of ordinary skill in the art, (3) the differences between the claimed invention and the prior art, and (4) secondary considerations of non-obviousness, to determine whether Apple has shown by clear and convincing evidence that these claims are invalid for obviousness. In doing so, the Commission concludes, as did the Final ID, that claim 12 of the '501 patent would have been invalid as obvious over combinations of references primarily based on Lumidigm, but claims 22 and 28 of the '502 patent and claims 12, 24, and 30 of the '648 patent are not invalid as obvious over those combinations of references.

Below, the Commission provides its analysis regarding *prima facie* obviousness of the above-mentioned structural limitations, and then discusses the objective evidence of non-

---

[20] As the Final ID noted, the parties stipulated that the preambles of the asserted patents are limiting. *See* Final ID at 180 n.66.

MASIMO 2003
Apple v. Masimo
IPR2024-00290

obviousness. Last, the Commission provides its analysis as to whether, in view of its underlying findings, Apple has shown by clear and convincing evidence that the asserted claims of the Poeze patents are invalid. In sum, the Commission concludes that Apple has not met its burden, except with respect to claim 12 of the '501 patent. The Commission affirms the Final ID as to *prima facie* obviousness and secondary considerations over Lumidigm and combinations of references therewith to the extent it is not modified or reversed herein.

3. *Prima Facie* Obviousness Over Lumidigm and Combinations Therewith

a. The "Openings" or "Through Holes" Limitations

As noted above, the claims recite an "opening" or "through hole" "extending through" or "provided through" the protrusion and "aligned with" or "over" each of the photodiodes. More specifically, the claims recite (with added emphasis) as follows:

- Element [1D] of claim 12 of the '501 patent: "*a plurality of openings extending through the protrusion and positioned over the three photodiodes*."
- Element [19C] of claim 22 of the '502 patent: "a protrusion comprising a convex surface[21] including *separate openings extending through the protrusion* and lined with opaque material, *each opening positioned over a different one of the four photodiodes*."
- Element [28F] of claim 28 of the '502 patent: "*a plurality of openings* in the convex surface, *extending through the protrusion*, and *aligned with the four*

[21] The Commission affirms the Final ID's finding that Lumidigm combined with prior art knowledge teaches or suggests a "protrusion" having a "convex surface." *E.g.*, Final ID at 101–03. The Final ID found that known ergonomic and contact benefits would provide persons of ordinary skill in the art a reason to modify Lumidigm to include a convex surface, as argued by Apple. *See id.*

MASIMO 2003
Apple v. Masimo
IPR2024-00290

photodiodes, each opening defined by an opaque surface configured to reduce light piping."

- Element [8E] of claim 12 of the '648 patent: "a *plurality of openings provided through the protrusion* and the convex surface, *the openings aligned with the photodiodes*."
- Element [20D] of claims 24 and 30 of the '648 patent: "a *plurality of through holes*, each through hole including a window and *arranged over a different one of the at least four photodiodes*."

i. The "Openings" in the "Three Photodiode" Claim (Claim 12 of the '501 Patent)

The Final ID first analyzed the "openings" limitations in its discussion of claim 12 of the '501 patent, which claims a "user-worn device" that, unlike the other asserted claims of the Poeze patents, has "at least three photodiodes," as opposed to "four photodiodes." The "openings" limitation of that claim is included in element [1D], which recites "a plurality of openings extending through the protrusion and positioned over the three photodiodes." *See* JX-0001 ('501 patent) at claim 12, element [1D]. The Final ID found that Lumidigm teaches or suggests this limitation, *see* Final ID at 104–06, contrary to its conclusions as to the four photodiode claims, *see id.* at 120–21, 130, 139, 142.

Before the ALJ, Apple argued that element [1D] of the '501 patent was taught by Lumidigm because Lumidigm expressly states that photodiode/detector 36 in Figure 2 (annotated version provided below showing detector 36 in purple) "may comprise . . . a plurality of discrete elements" and Figure 6 (annotated version also provided below) illustrates an embodiment having three such detectors (also shown in purple). *See* RPHBr. at 76.

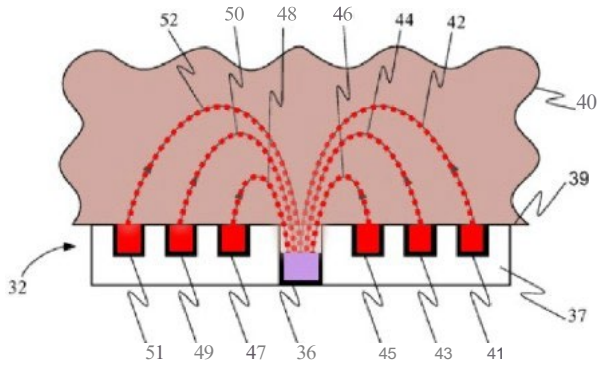

FIG. 2

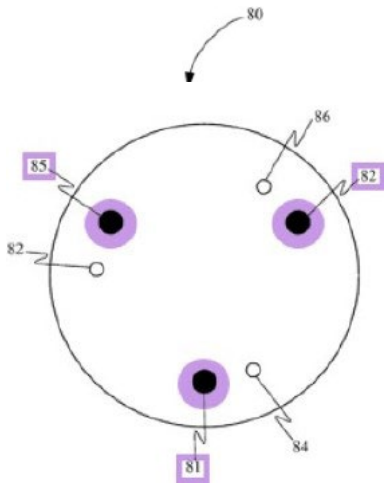

FIG.6

RX-0411 (Lumidigm) at Fig. 2 and Fig. 6 (identifying light sources/LEDs 82, 84, and 86 and detectors/photodiodes 81, 82 [sic],[22] and 85). For their part, Complainants argued that element [ID] was not met because Figure 2, which undisputedly shows a side view "opening" over a single photodiode, is allegedly in no way linked to Figure 6, which shows a top-down view of three photodiodes. *See* CPHBr. (Reply) at 48.

The Final ID accepted Apple's arguments, reasoning that "Figure 2 co1Tesponds to the source-detector anangement of Figure 3, and that … anangement of three sources and three detectors in Figure 6 is a disclosed alternative to Figure 3." *See* Final ID at 105-06. Figure 3 is reproduced below.

[22] As noted above, item number 82 should be item number 83.

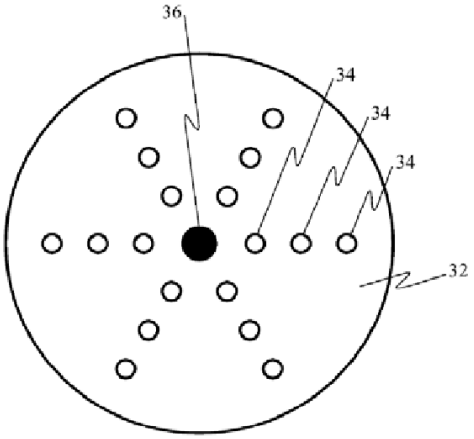

FIG. 3

RX-0411 (Lumidigm) at Fig. 3 (depicting photodiodes/detectors 36 and LEDs/light sources 34). The Final ID therefore determined that element [1D] was met. *See id.*

No party petitioned for the Commission to review this finding, so the Commission has determined to affirm this finding.

ii. The Openings in the "Four Photodiode" Claims

The Final ID found that the openings or through holes limitations in elements [19C] and [28F] of the '502 patent and elements [8E] and [20D] of the '648 patent were not taught or suggested by the prior art.

Before the ALJ, Apple argued that Lumidigm explains that, for any of the "reflectance" type sensor heads shown in its figures, reflected light on the top surface of the tissue can be "detrimental" to optical measurements, and thus the detectors should be "recessed from the sensor surface" in "optically opaque material" to "minimize[ ] the amount of light that can be detected after reflecting off the first (epidermal) surface of the tissue" and to provide "optical blocking." RPHBr. at 72–74, 82–83 (quoting and citing RX-0411 (Lumidigm) at 7:64–8:1). Apple further argued that a person of ordinary skill in the art would have understood that, for the

embodiments with multiple photodiodes, the protrusion would include separate openings positioned over each of the photodiodes. RPHBr. at 75–77, 83.

The Final ID disagreed with Apple, finding that the evidence does not show that the "array"-type detectors in Lumidigm relied upon by Apple for element [19B] of the '502 patent for identification of the "four photodiodes" would be formed with "separate openings" through the protrusion for individual photodiodes in the array, as required by element [19C] of the '502 patent. Final ID at 120–21 (citing RPHBr. at 82; CPHBr. at 143; CPHBr. (Reply) at 55). The Final ID also rejected Apple's argument that these limitations are obvious based on the combination of Lumidigm with Cramer. *E.g.*, Final ID at 121.

Apple petitioned for the Commission to review these findings. RPet. at 21–26.

The Commission has determined to take no position as to the openings or through holes limitations of the asserted claims of the '502 patent and '648 patent. *See Beloit*, 742 F.2d at 1423. Specifically, the Commission has determined to take no position on the Final ID's findings as to the following "openings" and "through hole" limitations: (1) element [19C] of claim 22 of the '502 patent: "a protrusion comprising a convex surface including separate openings extending through the protrusion and lined with opaque material, *each opening positioned over a different one of the four photodiodes*"; (2) element [28F] of claim 28 of the '502 patent: "a plurality of openings in the convex surface, extending through the protrusion, and *aligned with the four photodiodes*, each opening defined by an opaque surface configured to reduce light piping"; (3) element [8E] of claim 12 of the '648 patent: "a plurality of openings provided through the protrusion and the convex surface, *the openings aligned with the photodiodes*"; and (4) element [20D] of claims 24 and 30 of the '648 patent: "a plurality of

MASIMO 2003
Apple v. Masimo
IPR2024-00290

through holes, each through hole including a window and *arranged over a different one of the at least four photodiodes*."

As explained below, the Commission affirms the Final ID's findings that Lumidigm and combinations therewith fail to teach or suggest several other limitations in claims 22 and 28 of the '502 patent and claims 12, 24, and 30 of the '648 patent. The Commission therefore takes no position on whether Lumidigm, or Lumidigm in combination with other prior art references, discloses the openings or through holes limitations of the '502 and '648 patents.

b. The "Transmissive Window" or "Optically Transparent Material" Limitations

The asserted claims of the '502 and '648 patents also recite a separate "transmissive window" or "optically transparent material" "within," "extending across," or "arranged over" each of the "openings" or "though holes." More specifically, the claims recite as follows:

- Element [19D] of claim 22 of the '502 patent: "optically transparent material within each of the openings."
- Element [28G] of claim 28 of the '502 patent: "a plurality of transmissive windows, each of the transmissive windows extending across a different one of the openings."
- Element [8F] of claim 12 of the '648 patent: "a separate optically transparent window extending across each of the openings."
- Element [20D] of claims 24 and 30 of the '648 patent: "each through hole including a window and arranged over a different one of the at least four photodiodes."

The Final ID found that the "extending across" and "arranged over" limitations (element [28G] of claim 28 of the '502 patent, element [8F] of claim 12 of the '648 patent, and element

MASIMO 2003
Apple v. Masimo
IPR2024-00290

[20D] of claims 24 and 30 of the ’648 patent) were taught by Lumidigm or combinations therewith, but that the “within” limitation (element [19D] of claim 22 of the ’502 patent) was not. *See* Final ID at 130 (element [28G] of claim 28 of the ’502 patent), 139 (element [8F] of the ’648 patent), 142 (element [20D] of claims 24 and 30 of the ’648 patent), 121–24 (element [19D] of claim 22 of the ’502 patent).

As discussed below, on review, the Commission finds that none of these limitations are taught by Lumidigm or combinations therewith.

i. Element [19D] of Claim 22 of the ’502 Patent

a) The Final ID

With respect to element [19D] of the ’502 patent (an “optically transparent material within each of the openings”), Apple identified as the “optically transparent material” Lumidigm’s disclosure of an “optical relay” positioned “between the sensor surface 39 and the skin 40” that “transfers the light . . . from the skin back to the detector(s).” RPHBr. at 84–85; RX-0411 (Lumidigm) at 8:19–23; Final ID at 121. Lumidigm provides examples of “optical relays,” including “fiber-optic face plates and tapers, individual optical fibers and fiber bundles, light pipes and capillaries, and other mechanisms known to one of skill in the art.” RX-0411 (Lumidigm) at 8:23–26; *see also* Final ID at 121–22. Apple relied on Dr. Warren’s testimony that one of ordinary skill in the art would have understood an “optical relay” to be an optically transparent material. RPHBr. at 84–85; Final ID at 122; Tr. (Warren[23]) at 1221:16–1222:25. Apple further argued that these limitations would be obvious because the use of optically transparent materials within openings

[23] Steven Warren was admitted as an Apple expert witness in biomedical engineering, medical monitoring systems, biomedical instrumentation, biomedical optics, light issue interaction, diagnostic systems, wearable sensors, and biomedical signal processing. *E.g.*, Final ID at 6–7.

over photodiodes and the use of transmissive or transparent windows arranged over or extending across openings over photodiodes was well-known at the time of the Poeze patents. RPHBr. at 111–13; Tr. (Warren) at 1193:23–1194:14, 1221:16–1222:9; RDX-8C at .11 (citing, *inter alia*, RX-0670 (Cramer[24]); RX-0665 (Nippon[25]); RX-0666 (Seiko 131[26]); RX-1221 (CLT 2160[27]); *see also* Final ID at 122–23. According to Apple, a person of ordinary skill in the art would have been motivated to combine Lumidigm's wristwatch with teachings from Seiko 131 and Cramer because "(1) Lumidigm expressly states that its sensor can include an optical relay; and (2) a [person of ordinary skill in the art] would have independently looked to literature like Seiko 131 and Cramer for this element as the benefits were well-known." RPHBr. at113. Those alleged benefits are protecting the photodiodes from dirt and helping to transfer light. *E.g.*, RResp. at 17–18 (citing Tr. (Warren) at 1193:24–1194:14, 1221:16–1222:9).

For their part, Complainants argued that Lumidigm's disclosure of an "optical relay" does not meet the "optically transparent material" limitation and, in any event, is not disclosed in connection with Lumidigm's wristwatch embodiment. CPHBr. at 138–39 (citing Tr.

---

[24] U.S. Patent No. 4,224,948, titled "Wrist Borne Pulse Meter/Chronometer," issued to Frank B. Cramer, *et al.*, on September 30, 1980, from an application filed on November 24, 1978 (RX-0670).

[25] U.S. Patent No. 4,880,304, titled "Optical Sensor for Pulse Oximeter," issued to Jonathan P. Jaeb, *et al.*, on November 14, 1989, from an application filed on April 1, 1987 (RX-0665). The face of the patent indicates that Nippon is assigned to Nippon Colin Co., Ltd.

[26] U.S. Patent No. 5,766,131, titled "Pulse-Wave Measuring Apparatus," issued to Yutaka Kondo, *et al.*, on June 16, 1998, from an application filed on July 30, 1996 (RX-0666). The face of the patent indicates that Seiko 131 is assigned to Seiko Epson Corporation and Seiko Instruments, Inc.

[27] "CLT 2160" is a datasheet introduced by Apple. RX-1221. The Final ID found the datasheet to be reliable evidence. Final ID at 109 n.38.

MASIMO 2003
Apple v. Masimo
IPR2024-00290

(Madisetti[28]) at 1330:2–5); *see also* Final ID at 123. Complainants further argued that Seiko 131 fails to disclose multiple openings or optically transparent material within multiple openings. CPHBr. at 148–49; *see also* Final ID at 123. Complainants further argued that, with respect to Cramer, the alleged windows are between the annular rings and are not "within" the openings. CPHBr. at 146–47; *see also* Final ID at 123.

The Final ID found that Lumidigm clearly discloses "optically transparent material" over openings associated with photodiodes, but that the evidence does not clearly and convincingly show a reason to incorporate such material "within" each opening. Final ID at 123. According to the Final ID, Lumidigm describes an optical relay that is comprised of optically transparent material. *Id.* at 123 (citing RX-0411 (Lumidigm) at 8:19–26; Tr. (Warren) at 1221:16–1222:25). However, the Final ID found that the optical relay is not "within" the opening depicted in Figure 2, rather, it is located "between the sensor surface 39 and the skin 40." *Id.* (quoting RX-0411 (Lumidigm) at 8:19–26) (citing RX-0411 (Lumidigm) at Fig. 2).

The Final ID likewise found that Seiko 131 similarly discloses a "light transmittance plate" that is positioned above its sensor, but that plate is not "within" any opening. *Id.* at 123 n.47 (citing RX-0666 (Seiko 131), at 10:30–32). And the Final ID also found that Cramer discloses annular windows, but those windows do not appear to be associated within "each" opening. *Id.* (citing Tr. (Warren) at 1234:22–1235:12; RDX-8C at .73; RX-0670 (Cramer) at Fig. 6). The Final ID added that "Apple appears to have identified transparent windows within an opening in Cramer's preferred photodiode, the CLT 2160, but did not provide a clear and convincing reason to modify Lumidigm to include such material within the openings or to

[28] Vijay Madisetti is Complainants' expert witness and was admitted as an expert in the field of physiological monitoring technologies. Final ID at 6.

MASIMO 2003
Apple v. Masimo
IPR2024-00290

incorporate the CLT 2160 photodiode in Lumidigm." *Id.* at 123–24 (citing RX-0670 (Cramer) at 5:33–35, Fig. 6; RX-1221 (CLT 2160); RPHBr. at 112–13).

Apple petitioned for review of the Final ID's findings regarding Lumidigm alone and Lumidigm combined with Cramer. *See* RPet. at 96–97.

b) Apple's Petition

Regarding Lumidigm alone, Apple's petition argued that Lumidigm teaches an optical relay to "transfer[ ] the light from the light sources to the skin and from the skin back to the detector(s) while minimizing light loss and spreading." RPet. at 96 (quoting RX-0411 (Lumidigm) at 8:19–26) (citing Tr. (Warren) at 1221:16–1222:25, 1235:14–1236:2). Apple further asserted that a person of ordinary skill in the art would have understood that an optical relay could be added to Lumidigm's sensor. *Id.* (citing RX-0411 (Lumidigm) at 8:19–26, Fig. 2; Tr. (Warren) at 1221:16–1222:25). Apple further argued that a person of ordinary skill in the art would have further understood that the optical relay could be placed over or within the openings to "transfer light" from the tissue to the photodiodes and "protect the detector from dust and debris and dirt." *Id.* (citing Tr. (Warren) at 1193:24–1194:7, 1221:16–1222:16).

Regarding Lumidigm in combination with Cramer, Apple argued that the "use of optically transparent materials extending across or within opening[s] associated with photodiodes was well known in the art prior to 2008 and taught by Lumidigm." RPet. at 97 (citing Tr. (Warren) at 1221:16–1222:9, 1193:24–1194:14; RX-0411 (Lumidigm) at 8:19–26, Fig. 2). Apple added that a person of ordinary skill in the art:

> would have naturally looked to other references in the field to improve on Lumidigm's teachings and would recognize the CLT 2160 taught by Cramer as a "can" detector and would understand that each can would include a lens at the top end of the can, that the detector would be positioned inside the can at the focal point of the lens, and that there would be a gap between the detector and the lens, creating an opening between the detector and the lens.

Id. (citing RX-0670 (Cramer) at Fig 6; Tr. (Warren) at 1231:23–1232:9, 1234:3–8, 1234:22–1235:12). Thus, according to Apple, a person of ordinary skill in the art would have been motivated to combine Lumidigm with Cramer because "Lumidigm expressly teaches the benefits of transparent material within openings over photodiodes and, more generally, because the benefits were well known." *Id.* (citing Tr. (Warren) at 1235:14–1236:2).

c) Complainants' Response

In response, Complainants argued that the evidence refutes Apple's argument that Lumidigm alone teaches or suggests that the optical relay would be *within* the opening. CResp. at 95 (citing RX-0411 (Lumidigm) at 8:19–26, Fig. 2; Tr. (Madisetti) at 1330:2–5, 1343:1–4; Tr. (Warren) at 1221:16–1221:25) (emphasis added); Final ID at 123–24. Complainants presented a similar argument regarding the combination of Lumidigm with Cramer. *See id.* (citing RX-0411 (Lumidigm) at 8:19–26, Fig. 2; RX-0670 (Cramer) at Fig. 6; Tr. (Madisetti) at 1330:2–5, 1334:15–1335:25, 1343:1–4; Tr. (Warren) at 1221:16–1221:25, 1235:24–1236:2); Final ID at 123–24 (including n.47). Complainants further pointed out that the USPTO, in denying institution of Apple's IPR petitions, found that "none of the prior art on which [Apple] relies[, including Lumidigm,] discloses a convex protrusion with multiple openings or windows for multiple detectors." *Id.* at 95–96 (citing CResp. Appx. A, at 17; Appx. B, at 16; Appx. C, at 16) (emphasis omitted).

Relatedly (but more specifically directed to element [28G] of claim 28 of the '502 patent),[29] Complainants argue that Apple's witness, Dr. Warren, testified only about what a

[29] Recall that that claim language recites: "a plurality of transmissive windows, each of the transmissive windows *extending across* a different one of the openings." This language differs from that of element [19D] of claim 22 of the '502 patent only in that it does not require the window or optically transparent material to be "*within*" the through holes or openings.

MASIMO 2003
Apple v. Masimo
IPR2024-00290

person of ordinary skill in the art *could do*, and not what such a person would have been motivated to do or have a reason to do. *E.g.*, CPet. (Summary) at 3 (citing Final ID at 131); *see also* CPet. at 23–24. Complainants argued that Apple provided no evidence that a person of ordinary skill in the art "*would have* modified Lumidigm's face plate into multiple windows with a reasonable expectation of success ([RPHBr.] at 84–85), and the [Final] ID made no findings regarding reasonable expectation of success for such a modification." CPet. (Summary) at 3 (citing Final ID at 131) (emphasis added); *see also* CPet. at 23–24.

d) Analysis

The Commission has determined to affirm and adopt the Final ID's findings and conclusion that neither Lumidigm nor a combination of Lumidigm and other prior art teaches or suggests an "optically transparent material *within* each of the openings." Final ID at 121–24. The Commission has considered Apple's arguments that the Final ID erred as to this limitation and finds them unpersuasive.

The Commission has further determined to supplement the Final ID. Beyond the prior art not teaching or suggesting the optically transparent material within each of the openings, Apple failed to show that the prior art provides a reason to use a separate optically transparent material or window for each of the separate openings or through holes. *See* CPet. at 23–24. First, none of the prior art cited by Apple teaches or suggests separate optically transparent materials (or windows), and Apple has not shown by clear and convincing evidence that a person of ordinary skill at the time of the claimed inventions would have arrived at these limitations, as claimed. Apple acknowledges that Lumidigm does not teach the separate optically transparent materials (or windows). *E.g.*, RResp. at 18–19 (relying on knowledge in the art to modify Lumidigm to arrive at separate windows). Moreover, neither Cramer nor Seiko 131 disclose the separate optically transparent materials (or windows). As the Final ID properly found, Apple has failed to

MASIMO 2003
Apple v. Masimo
IPR2024-00290

clearly and convincingly show that Cramer teaches or suggests a protrusion with separate openings or through holes over separate photodiodes. *See* Final ID at 103 n.36; CPHBr. at 144–46; Tr. (Warren) at 1231:18–22; Tr. (Madisetti) at 1334:23–1335:2. Thus, Cramer cannot teach separate optically transparent materials (or windows) within (or over or extending across) the claimed separate openings or through holes. Additionally, Complainants correctly point out that Seiko 131 discloses only a singular phototransistor and light transmittance plate and thus does not teach the separate optically transparent materials (or windows) within (or over or extending across) the claimed separate openings or through holes. *See* CPHBr. at 148–50. CLT 2160 similarly discloses only a single window and photodiode. *See* RX-1221 (CLT 2160).

Second, Apple has not shown by clear and convincing evidence that, at the time of the claimed inventions, a person of ordinary skill in the art would have had a reason to use a separate optically transparent material (or window) within (or over or extending across) each of the separate openings (or through holes). As Complainants point out, Dr. Warren testified only about what a person of ordinary skill in the art *could* do, not what such a person *would* do. *See* CPet. (Summary) at 3; CPet. at 23–24; *see also* RPet. at 96–97 (discussing and citing Dr. Warren's testimony); Tr. (Warren) at 1193:24–1194:14 (stating only that windows were well known); *id.* at 1221:16–1222:25 (stating only a person of ordinary skill in the art "*could use*" an individual faceplate for each of the individual openings (emphasis added)); *id.* at 1235:24–1236:2 (stating that a person of ordinary skill in the art "would have known that windows *could be used*" (emphasis added)). Apple's asserted motivation for including the optical relay (allowing for the transfer of light and to protect the detector from dust and dirt), could be obtained with a single optically transparent material (or window) over the surface, as opposed to separate optically transparent materials (or windows). And, Apple's "convoluted combination of

modifications" is driven by improved contact and comfort from the claimed "convex surface," yet Apple has not shown why that improved contact and comfort would remain with the further modification to have multiple distinct openings and windows. *See Apple Inc. v. Masimo Corp.*, IPR2022-01274 (available at CResp. at Appx. C) (discussed below); Final ID at 101–03 (finding that a person of ordinary skill in the art would be motivated to implement a convex surface to obtain better contact and comfort). Moreover, as noted above, neither Cramer nor Seiko 131 teach the separate optically transparent material (or windows), and Apple points to no specific teachings of those references, or any other reference, that suggests using separate optically transparent materials (or windows). Apple has thus failed to present clear and convincing evidence that a person of ordinary skill in the art *would have* implemented Lumidigm's "optical relay" as separate optically transparent materials (or windows) within (or over or extending across) each of the separate openings (or through holes), as opposed to a single optical relay covering the entire convex surface. *See, e.g.*, RResp. at 17–19; RPet. at 96–97; Final ID at 121–24.

Although not binding on the Commission,[30] the Commission notes that its decision herein is consistent with the USPTO's denial of Apple's petitions for an IPR to review claims 1–30 of the '502 patent over combinations of references where Lumidigm serves as the primary reference. *See generally Apple Inc. v. Masimo Corp.*, IPR2022-01274 (available at CResp. at

[30] *See, e.g.*, *Certain Hybrid Electric Vehicles & Components Thereof*, Inv. No. 337-1042, Notice of Investigation at 1 (Mar. 7, 2017) (Commission instituting investigation over proposed Respondents' objection that asserted claims had been found unpatentable in IPR proceedings and were on appeal to Federal Circuit).

MASIMO 2003
Apple v. Masimo
IPR2024-00290

Appx. C). There, Apple argued that based on the combined teachings of Lumidigm and "Kotanagi"[31] the following figures emerge:

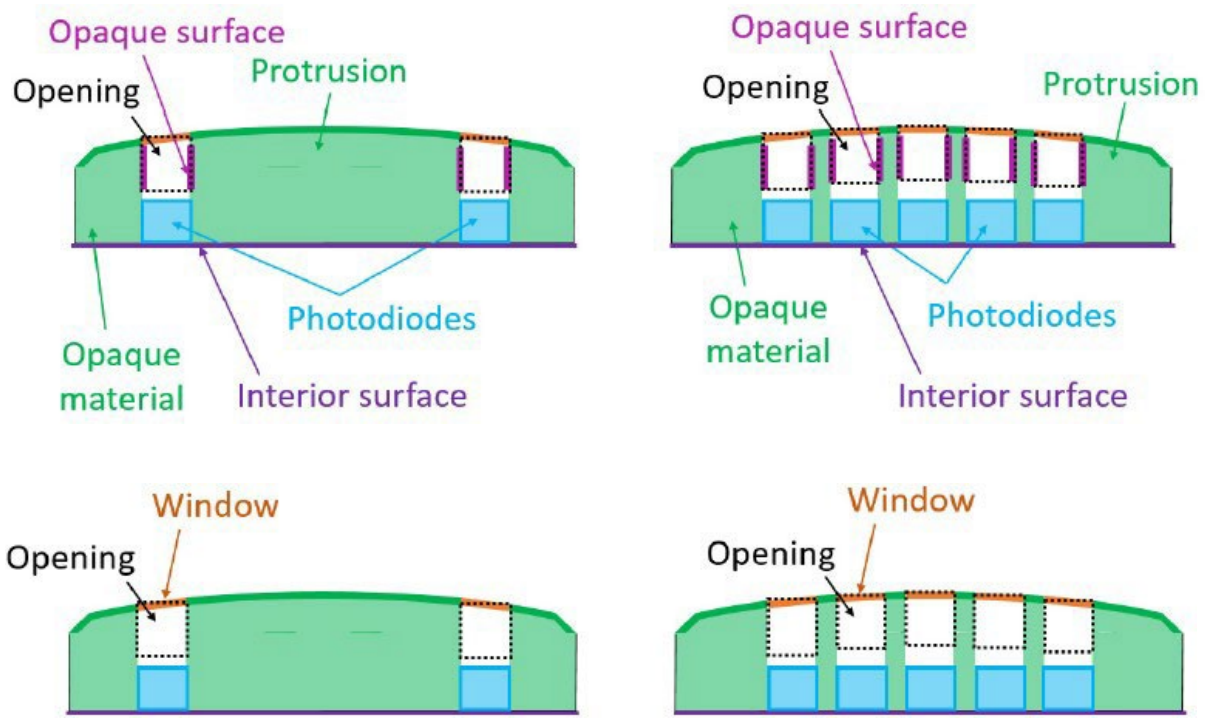

Id. at 15.

In this investigation, Apple's Lumidigm-based theories of obviousness rely on the same modified version of Lumidigm. In denying institution, the USPTO agreed with Complainants that "none of the prior art on which [Apple] relies discloses a convex protrusion with multiple openings or windows for multiple detectors," and that Apple "simply does not explain adequately why such configuration results from the actual teachings of the prior art." *Id.* at 16; *see also id.* at 16–19. The USPTO reasoned that, "[w]ithout the guidance provided by the claims of the '502 patent, it is difficult to conclude that [Apple's] postulation as to a particular structure

[31] PCT Application No. WO 2005/092182.

that results from combining the teachings of Lumidigm [and the other prior art] is based on an objective assessment of what those teachings would have conveyed to a skilled artisan." *Id.* at 16. In other words, Apple's arguments there were "grounded in hindsight rather than based on due consideration of the teachings of the pertinent prior art." *Id.* at 19. The same is true here.

While Apple alleges that both the evidentiary record and the obviousness theory before the USPTO and the Commission are different, *see* RResp. at 17 n.4, there are no notable differences. The above-shown modification of Lumidigm presented to the USPTO is based almost entirely on Lumidigm, *see Apple*, IPR2022-01274 at 16–19 (available at CResp. at Appx. C), as is Apple's Lumidigm-based obviousness theory in this investigation. And while Apple relied on Kotanagi for the "convex surface" modification of Lumidigm before the USPTO (as opposed to other knowledge in the prior art, as it does before the Commission), Apple relied on the same reason for that modification of Lumidigm both before the USPTO and here—"better contact" and "comfort." *Compare id.* at 16–17, *with* Final ID at 99, 101–02 (incorporating ergonomic features and optical and mechanical coupling). Accordingly, the Commission's rejection of Apple's Lumidigm-based theory for the obviousness of claim 22 of the '502 patent is consistent with the USPTO's denial of Apple's petition to institute an IPR over combinations of references involving Lumidigm.[32]

---

[32] Complainants assert that the USPTO's denial of the institution of Apple's petition for an IPR over Lumidigm-based combinations of references as to the claims of the '501 patent suggests that the Commission should also reverse the Final ID as to its obviousness finding as to claim 12 of the '501 patent. CResp. at 3 n.2. However, in Apple's petition related to the '501 patent and Lumidigm, Apple's theory was different than the Lumidigm-based theory that it presented in this investigation as to the '501 patent. Significantly, in that petition, Apple presented a Lumidigm-based theory that is similar to the one it presents in this investigation as to the asserted claims of the '502 and '648 patents (*see Apple Inc. v. Masimo Corp.*, IPR 2022-01272 (USPTO Jan. 24, 2023) (available at CResp. at Appx. B)), which as discussed in this section, lacks a reason for a person of ordinary skill in the art to arrive at the claimed subject

MASIMO 2003
Apple v. Masimo
IPR2024-00290

ii. Element [28G] of the ’502 Patent—“Each of the Transmissive Windows Extending Across a Different One of the Openings”

a) The Final ID

Regarding element [28G] of claim 28 of the ’502 patent, which uses the phrase “extending across,” the Final ID found that Lumidigm discloses an “optical relay” that is transmissive and is positioned above an opening for a detector. Final ID at 131 (citing RX-0411 (Lumidigm) at 8:19–26; Tr. (Warren) at 1221:16–1222:25). The Final ID recognized that Lumidigm discloses a single window, but found, based on Dr. Warren’s testimony, that “a person of skill would know that you could do an individual faceplate for each of the individual openings as a means to provide light but still optimize the process.” *Id.* (citing, *inter alia*, Tr. (Warren) at 1221:1–1222:25, 1193:23–1194:14; RDX-8C at .11; RX-0670 (Cramer); RX-0666 (Seiko 131)).

Complainants petitioned for review the Final ID’s findings regarding Lumidigm. *See* CPet. at 23–24.

b) Complainants’ Petition

Complainants’ petition is largely the same as its argument discussed in the previous section. Complainants argued that the Final ID “legally erred by finding that Lumidigm satisfied the requirements of Element [28G] based on [Dr.] Warren’s testimony about what a [person of ordinary skill in the art] ‘could do.’” CPet. (Summary) at 3 (quoting Final ID at 131); *see also* CPet. at 23–24. Complainants further argued that the Final ID also legally erred because Apple

---

matter. In other words, while claim 12 of the ’501 patent does not recite the separate windows, Apple’s IPR petition depended on proving that a person of ordinary skill in the art would arrive at a device that contained that limitation.

MASIMO 2003
Apple v. Masimo
IPR2024-00290

provided no evidence that a person of ordinary skill in the art "would have modified Lumidigm's face plate into multiple windows with a reasonable expectation of success ([RPHBr.] at 84–85), and the [Final] ID made no findings regarding reasonable expectation of success for such a modification." CPet. (Summary) at 3 (citing Final ID at 131); *see also* CPet. at 23–24. Complainants further argue that "[t]he Patent Office's recent rejection of Apple's IPR petitions challenging the Poeze Patents confirms that Apple's obviousness theories are without merit and based in hindsight." CResp. at 8.

c) Apple's Response

Apple's response is also largely the same argument as the one discussed in the previous section. According to Apple, Dr. Warren explained that this limitation was known in the prior art "both to help transfer light and to protect the photodiodes from dirt or debris." RResp. at 17–18 (citing Tr. (Warren) at 1193:24–1194:14, 1221:16–1222:9; RX-0411 (Lumidigm) at 8:19–23). Apple also relied on Dr. Warren's testimony that the listed examples were well known "and could be placed within or arranged over the openings to transfer light and to protect the photodiodes." *Id.* at 18–19 (quoting Tr. (Warren) at 1221:16–1222:25). Apple further argued that a person of ordinary skill in the art would have "understood that the fiber optics face plates referenced in Lumidigm could be implemented as a single faceplate or as individual faceplates over each opening and would have been motivated to implement either alternative." *Id.* at 19 (citing Tr. (Warren) at 1221:16–1222:25, 1193:24–1194:14).

d) Analysis

For the reasons discussed above as to element [19D] of the '502 patent, the Commission finds that Apple has not shown, by clear and convincing evidence, that, at the time of the claimed invention, the prior art teaches separate transmissive windows for each of the openings or that a person of ordinary skill in the art would have had any reason or motivation to arrive at this

limitation, as claimed. Additionally, for the same reasons noted above for element [19D] of the ’502 patent, the Commission’s determination is consistent with the USPTO’s denial of Apple’s petition requesting the institution of an IPR proceeding regarding the claims of the ’502 patent. *See generally Apple Inc. v. Masimo Corp.*, IPR2022-01274 (available at CResp. at Appx. C).

iii. Element [8F] of Claim 12 of the ’648 Patent—“A Separate Optically Transparent Window Extending Across Each of the Openings”; and Element [20D] of Claims 24 and 30 of the ’648 Patent—“Each Through Hole Including a Window and Arranged Over a Different One of the at Least Four Photodiodes”

Regarding element [8F] of claim 12 of the ’648 patent, which also uses the phrase “extending across,” the Final ID held:

> For the same reasons discussed above in the context of the “plurality of openings” limitations of ’502 patent claim 19 (Element [19C]), the evidence fails to show, clearly and convincingly, a “plurality of openings” with a “separate optically transparent window extending across each of the openings” in combination with the “four photodiodes” embodiments of Lumidigm relied upon by Apple.

Final ID at 139 (citing RPHBr. at 82, 91, 98). The Final ID made a similar conclusion regarding element [20D] of claims 24 and 30 of the ’648 patent. *See* Final ID at 142. Thus, while the Final ID found that, *e.g.*, “a separate optically transparent window extending across each of the openings” limitation was taught (consistent with its finding as to element [28G] of the ’502 patent, *see id.* at 131), the Final ID found that that limitation was not taught in a “four photodiode” embodiment having, *e.g.*, “openings aligned with the [four] photodiodes,” *see, e.g.*, *id.* at 120–21.

As noted above, the Commission has determined to take no position as to the Final ID’s underlying finding that the openings in these claims (elements [19C] and [28F] of the ’502 patent

and elements [8E] and [20D] of the ’648 patent) were not taught or suggested by the prior art. However, the Commission has determined to affirm the Final ID for the alternative basis that because, for the reasons discussed above as to element [19D] of claim 22 of the ’502 patent and element [28G] of claim 28 of the ’502 patent, Apple did not present clear and convincing evidence that, at the time of the claimed invention, the prior art taught the claimed separate optically transparent windows extending across each of the openings, or that a person of ordinary skill in the art would have had any reason or motivation to arrive at this limitation. Additionally, for the same reasons noted above for element [19D] of the ’502 patent and element [28G] of claim 28 of the ’502 patent, the Commission’s determination is consistent with the USPTO’s denial of Apple’s petition requesting the institution of an IPR proceeding regarding the claims of the ’648 patent. *See generally Apple Inc. v. Masimo Corp.*, IPR2022-01276 (USPTO Jan. 30, 2023) (available at CResp. at Appx. A).

iv. Conclusions Regarding *Prima Facie* Obviousness and the Asserted Claims of the ’501, ’502, and ’648 Patents

In sum, regarding *prima facie* obviousness and the asserted claims of the ’502 and ’648 patents, the Commission concludes that, although Lumidigm and combinations of references therewith teach or suggest (1) the four photodiodes and (2) the protrusion, the combinations of references do not teach or suggest (4) a separate “transmissive window” or “optically transparent material” “within,” “extending across,” or “arranged over” each of the openings or though holes. The Commission takes no position on whether Lumidigm and combinations of references therewith teach or suggest an opening or through hole extending through or provided through the protrusion and aligned with or over each of the four photodiodes. Thus, Apple has not shown by clear and convincing evidence that these claims are *prima facie* obvious.

Regarding claim 12 of the '501 patent, the Commission affirms the Final ID's conclusion that Apple has shown by clear and convincing evidence that this claim is *prima facie* obvious.

4. Objective Evidence of Non-Obviousness

a. Introduction

As noted above, the Commission must consider "the totality of the evidence" before reaching a decision on obviousness, and that totality of evidence includes the existence of secondary considerations, or objective indicia of non-obviousness. *E.g.*, *Richardson-Vicks*, 122 F.3d at 1483.

Also, as noted above, before the ALJ, Complainants presented evidence of objective indicia of non-obviousness that allegedly showed the following: (1) skepticism and unexpected results related to the "convex protrusion" claim limitations; (2) skepticism and failures of others related to measuring pulse oximetry at the wrist; (3) Apple's alleged copying of Masimo's technology; and (4) the commercial success of the Apple Watch products once Apple implemented that technology. *See, e.g.*, Final ID at 145–56, 240–241.

Regarding Complainants' evidence, the Final ID agreed with Apple that Complainants failed to show that there was skepticism in the industry regarding convex surfaces. *See* Final ID at 147. And regarding Complainants evidence of skepticism and failures of others related to measuring pulse oximetry at the wrist, the Final ID found that this evidence does not significantly show non-obviousness because the asserted claims apply to any "user-worn device," including user-worn devices that are not worn on the wrist. *Id.* at 150–51. As for copying, the Final ID found that there was no significant credible evidence that Apple copied Masimo's patented technology. *Id.* at 153–54. Last, regarding commercial success, because the Final ID found that "there is little evidence of a significant nexus between Apple's commercial success and the allegedly non-obvious features of the asserted Poeze patent claims," the Final ID

MASIMO 2003
Apple v. Masimo
IPR2024-00290

found that this evidence "does not meaningfully affect the obviousness analysis." *Id.* at 156. Overall, the Final ID found that this evidence did not meaningfully alter the obviousness analysis. *See id.*

Complainants petitioned the Commission to review the Final ID's findings related to commercial success, *see* CPet. at 25–29; skepticism regarding convex surfaces, *id.* at 30–32; and skepticism regarding pulse oximetry at the wrist, *id.* at 33. Complainants did not petition for review of the Final ID's finding related to copying. *See generally id.* Accordingly, any such argument is waived. *Finnigan*, 180 F.3d at 1362–63.

The Commission has determined to affirm, without modifications, the Final ID as to (1) skepticism and unexpected results related to the "convex protrusion" claim limitations; (2) skepticism and failures of others related to measuring pulse oximetry at the wrist; and (3) Apple's alleged copying of Masimo's technology. Thus, the Commission adopts the Final ID's findings as to that evidence. For the reasons discussed below, the Commission has determined to affirm, with modifications, the Final ID's conclusion that Complainants' evidence of commercial success provides at most minimal weight due to the lack of a nexus to the claimed and novel features. *See* Final ID at 153–56.

b. Commercial Success

i. The Final ID

Before the ALJ, Complainants argued that the commercial success of the Apple Watch Series 6 and 7 is objective evidence of non-obviousness. CPHBr. at 173–75; CPHBr. (Reply) at 95–96; Final ID at 154–56. According to Daniel McGavock, Complainants' expert witness, sales of the Apple Watch Series 6 [redacted], and Apple advertised the blood oxygen feature as the key differentiator of the Series 6 over the previous series, Series 5. Tr. (McGavock) at 1416:10–21, 1422:8–1425:13; CX-0252; CX-1451; CX-

MASIMO 2003
Apple v. Masimo
IPR2024-00290

1532; CX-1289. Dr. Madisetti agreed with Mr. McGavock that there was a nexus between the blood oxygen feature of Apple Watch Series 6 and its commercial success. Tr. (Madisetti) at 1380:14–1381:4.

The Final ID found that the Apple Watch Series 6 was commercially successful and that "this may be due in some part to its blood oxygen monitoring features." Final ID at 155. The Final ID also found that the evidence does not persuasively indicate that the [redacted] "sales of the Apple Watch Series 6 are largely attributable to the blood oxygen feature, as market analysts have recognized the Apple Watch's 'blend of sleek design, good usability on a small screen, and a growing portfolio of health and fitness apps.'" *Id*. (quoting CX-1644 (Strategy Analytics)). The Final ID added that it is not "clear that the Apple Watch Series 6 was significantly more successful than other smartwatches." *Id*. (citing CX-1644 (Strategy Analytics)). According to the Final ID, the evidence "shows that much of the success of the Apple Watch Series 6 can be attributed to the growing market for smartwatches rather than the specific implementation of the pulse oximetry feature claimed in the patents-at issue." *Id*. (citing, *inter alia*, CX-1644 (Strategy Analytics)). Thus, the Final ID discounted Complainants' evidence of commercial success, finding that it does not "meaningfully affect the obviousness analysis." *Id*. at 155–56 (citing *Ormco Corp. v. Align Tech., Inc*., 463 F.3d 1299, 1313 (Fed. Cir. 2006)).

Because the Final ID found that "there is little evidence of a *significant nexus* between Apple's commercial success and the allegedly non-obvious features of the asserted Poeze patent claims, particularly for claim 12 of the '501 patent (which is not limited to blood oxygen measurements)," the Final ID found that this evidence "does not meaningfully affect the obviousness analysis above." Final ID at 156 (emphasis added).

As noted above, Complainants petitioned for review of this finding. *See* CPet. at 25–29.

MASIMO 2003
Apple v. Masimo
IPR2024-00290

ii. Complainants' Petition

In their petition for review of the Final ID, Complainants argued that the Final ID erroneously required that "there be a 'significant' nexus in order to be objective evidence of non-obviousness." CPet. at 25 (citing Final ID at 155, 156). According to Complainants, obviousness law does not require that "the patented invention be solely responsible for the commercial success[ ] in order for this factor to be given weight appropriate to the evidence." *Id*. at 26 (citing *Continental Can Co. USA, Inc. v. Monsanto Co.*, 948 F.3d 1264, 1273 (Fed. Cir. 1991); *Apple Inc. v. Samsung Elecs. Co.*, *Ltd*., 839 F.3d 1034, 1055–56 (Fed. Cir. 2016) (en banc)). Next, Complainants argued that the Final ID made clearly erroneous factual findings regarding commercial success. CPet. at 26–29.

iii. Analysis

On review, the Commission has determined to affirm the Final ID with modifications. The Commission agrees with Complainants that the standard for "commercial success" does not require a showing of "significant nexus." *See* CPet. at 25. However, the Commission agrees with the Final ID that Complainants' evidence is consistent with increased sales of smartwatches in general and was likely based on the Apple Watches' "blend of sleek design, good usability on a small screen, and a growing portfolio of health and fitness apps." *See, e.g.*, Final ID at 155–56. Accordingly, the Commission concludes that Complainants' evidence of commercial success is entitled to minimal weight due to Complainants' failure to show a nexus between the alleged commercial success and the alleged claimed and novel features.

5. Overall Conclusion as to Obviousness

Because the Commission modifies and/or supplements the Final ID's findings as to the asserted claims of the Poeze patents regarding *prima facie* obviousness and/or secondary considerations, the Commission evaluates anew (1) the scope and content of the prior art, (2) the

MASIMO 2003
Apple v. Masimo
IPR2024-00290

level of ordinary skill in the art, (3) the differences between the claimed invention and the prior art, and (4) secondary considerations of non-obviousness, to determine whether Apple has shown by clear and convincing evidence that these claims are invalid for obviousness.

In doing so, the Commission concludes, as did the Final ID, that claim 12 of the ’501 patent would have been invalid as obvious over combinations of references primarily based on Lumidigm, but that claims 22 and 28 of the ’502 patent and claims 12, 24, and 30 of the ’648 patent are not invalid as obvious over those combinations of references.

Regarding claim 12 of the ’501 patent, Apple has shown that this claim would have been *prima facie* obvious to a person of ordinary skill in the art. And, as discussed above, Complainants’ objective evidence of non-obviousness has minimal weight. In view of these underlying findings, the Commission concludes that Apple has shown that this claim would have been invalid by clear and convincing evidence.

Regarding claim 28 of the ’502 patent, Apple has not shown that this claim would have been *prima facie* obvious to a person of ordinary skill in the art. For example, Apple has failed to show that the prior art teaches or suggests elements [28PRE], [28G], [28I], [28J], and [28K]. Also, Complainants’ evidence of secondary considerations has minimal weight. In view of these underlying findings, the Commission concludes that Apple has not shown that this claim would have been invalid by clear and convincing evidence.

Regarding claim 22 of the ’502 patent, Apple has not shown that this claim would have been *prima facie* obvious to a person of ordinary skill in the art. Apple has failed to show that the prior art teaches or suggests elements [19PRE], [19D], and [19E]. Also, Complainants’ evidence of secondary considerations has minimal weight. In view of these underlying findings,

MASIMO 2003
Apple v. Masimo
IPR2024-00290

the Commission concludes that Apple has not shown that this claim would have been invalid by clear and convincing evidence.

Regarding claim 12 of the ’648 patent, Apple has not shown that this claim would have been *prima facie* obvious to a person of ordinary skill in the art. Apple has failed to show that the prior art teaches or suggests elements [8F] and [12]. Also, Complainants’ evidence of secondary considerations has minimal weight. In view of these underlying findings, the Commission concludes that Apple has not shown that this claim would have been invalid by clear and convincing evidence.

Regarding claims 24 and 30 of the ’648 patent, Apple has not shown that these claims would have been *prima facie* obvious to a person of ordinary skill in the art. For example, Apple has failed to show that the prior art teaches or suggests elements [20D], [20E], and [24]. Also, Complainants’ evidence of secondary considerations has minimal weight. In view of these underlying findings, the Commission concludes that Apple has not shown that these claims would have been invalid by clear and convincing evidence.

C. Non-Obviousness of the Asserted Claims of the ’745 Patent

1. Introduction

The Final ID found that claims 9, 18, and 27 of the ’745 patent have not been shown to be invalid. Final ID at 336. The Commission reviewed this finding. 88 Fed. Reg. at 32244. On review, the Commission affirms this finding with modifications.

Before the ALJ, Apple argued that claims 9 and 27 of the ’745 patent would have been obvious in view of the Apple Watch Series 0 and that claims 9, 18, and 27 of the ’745 patent

MASIMO 2003
Apple v. Masimo
IPR2024-00290

would have been obvious in view of U.S. Patent No. 8,670,819 to Iwamiya *et al*. (RX-0130[33]) in combination with U.S. Patent No. 9,392,946 to Sarantos *et al.* (RX-0366[34]) and U.S. Patent No. 8,998,815 to Venkatraman *et al*., (RX-0368[35]). *E.g.*, Final ID at 209.

Regarding claims 9 and 27 in view of the Apple Watch Series 0, the Final ID found that the prior art did not teach or suggest elements [1B], [1D], and [9] of claim 9 or elements [20B] and [20D] of claim 27. *See* Final ID at 212–14, 215–16, 218–20, 221, 222. Regarding claims 9, 18, and 27 and combinations based on Iwamiya, the Final ID found that the prior art did not teach or suggest element [9] of claim 9, element [18] of claim 18, and element [27] of claim 27. *See id.* at 228–31, 235–36, 239–40. Apple petitioned the Commission to review these findings. *See* RPet. at 62–70.

Complainants again presented objective evidence of non-obviousness. *See* CPHBr. at 233–34, CPHBr. (Reply) at 132–33. Complainants presented evidence allegedly showing Apple's skepticism and failures in implementing wrist-based pulse oximetry, the commercial success of the Apple Watch Series 6, and Apple's alleged copying of Masimo's technology. *See* CPHBr. at 233–34, CPHBr. (Reply) at 132–33. The Final ID concluded that, "[f]or the reasons discussed above in the context of the Poeze patents, this evidence does not weigh significantly against a finding of obviousness." Final ID at 241. The Final ID added that the "evidence of

---

[33] U.S. Patent No. 8,670,819, titled "Optical Biological Information Detecting Apparatus and Optical Biological Information Detecting Method," issued to Hiroshi Iwamiya *et al*., on March 11, 2014, from an application filed on June 29, 2010.

[34] U.S. Patent No. 9,392,946, titled "Heart Rate Sensor with High-Aspect-Ratio Photodetector," issued to Chris H. Sarantos, *et al*., on July 19, 2016, from an application filed on May 28, 2015.

[35] U.S. Patent No. 8,998,815, titled "Wearable Heart Rate Monitor," issued to Subramaniam Venkatraman, *et al*., on April 7, 2015, from an application filed on June 3, 2014.

MASIMO 2003
Apple v. Masimo
IPR2024-00290

commercial success is not relevant because the Accused Products have not been shown to practice claims of the '745 patent." *Id.* at 241 n. 87. Complainants petitioned for review of the Final ID's findings as to Complainants' objective evidence of non-obviousness. *See* CPet. at 45.

Based on the totality of the evidence, the Final ID found that Apple did not show by clear and convincing evidence that the asserted claims of the '745 patent are obvious. Final ID at 240. Apple petitioned for review of this finding. *See* RPet. at 62–70.

As noted above, the Commission determined to review the Final ID's obviousness findings as to the '745 patent. 88 Fed. Reg. at 32244. On review, the Commission has determined to affirm the Final ID's findings regarding *prima facie* obviousness of the asserted claims of the '745 patent. The Commission has considered Apple's petition for review and found its arguments that the Final ID erred to be unpersuasive. As to Complainants' evidence of secondary considerations, the Commission has determined to affirm in part and reverse in part the Final ID for the reasons discussed below. After considering the totality of the evidence, the Commission has further determined to affirm the Final ID's finding that Apple has not shown that the asserted claims of the '745 patent are obvious.

2. Objective Evidence of Non-Obviousness

In their petition for review, Complainants point out that the Final ID rejected its arguments for the '745 patent "[f]or the reasons discussed above in the context of the Poeze patents." CPet. at 45 (quoting Final ID at 150). Complainants argue that the Final ID's reasoning for the Poeze patents as to skepticism and failures of others in implementing wrist-based pulse oximetry does not apply to claims 9 and 18 of the '745 patent. CPet. at 45 (quoting Final ID at 150). Complainants point out that the Final ID discounted Complainants' evidence regarding the claims of the Poeze patents because the Poeze claims are not limited to pulse oximetry at "the wrist." *Id.* (citing Final ID at 150). Complainants then argue that, on the other

MASIMO 2003
Apple v. Masimo
IPR2024-00290

hand, claims 9 and 18 of the '745 patent are limited to pulse oximetry at the wrist. *See id.*; *see also* JX-0009 ('745 patent) at claim 9, element [1B] ("a material configured to be positioned between the plurality of light-emitting diodes and tissue on *a wrist of a user* when the physiological monitoring device is in use" (emphasis added)); *id.* at claim 18, elements [15A] and [15B] ("a plurality of light-emitting diodes configured to emit light proximate *a wrist of a user*; a light diffusing material configured to be positioned between the plurality of light-emitting diodes and a tissue measurement site on *the wrist of the user* when the physiological monitoring device is in use" (emphasis added)). Thus, according to Complainants, the Final ID "erred by failing to properly weigh the objective evidence of skepticism and failure of others in evaluating Claims 9 and 18." CPet. at 45.

The Commission agrees with Complainants. *See id.* Moreover, to the extent Apple disputes the Final ID's finding that Complainants have shown evidence of skepticism of Apple engineers regarding pulse oximetry at the wrist and the relevance thereof, *see* RResp. at 41–43, the Commission finds Apple's argument unpersuasive. The Final ID properly evaluated the evidence and arrived at its conclusion. In any event, this evidence does not meaningfully alter the obviousness analysis, as stated in the next sub-section.

The Commission affirms the Final ID's findings as to Complainants' other objective evidence of non-obviousness, including commercial success and Apple's alleged copying of Masimo's technology. *See* Final ID at 241. The Final ID found that this evidence does not support non-obviousness. *See id.*

3. Overall Conclusion as to Obviousness

Because the Commission alters the Final ID's findings as to the asserted claims of the '745 patent regarding secondary considerations, the Commission evaluates anew (1) the scope and content of the prior art, (2) the level of ordinary skill in the art, (3) the differences between

MASIMO 2003
Apple v. Masimo
IPR2024-00290

the claimed invention and the prior art, and (4) secondary considerations of non-obviousness, to determine whether Apple has shown by clear and convincing evidence that these claims are invalid for obviousness.

Like the Final ID, the Commission finds, regarding claims 9 and 27 in view of the Apple Watch Series 0, that the prior art does not teach or suggest elements [1B], [1D], and [9] of claim 9 or elements [20B] and [20D] of claim 27. *See* Final ID at 212–14, 215–16, 218–20, 221, 222. And like the Final ID, regarding claims 9, 18, and 27 and combinations based on Iwamiya, the Commission finds that the prior art does not teach or suggest element [9] of claim 9, element [18] of claim 18, and element [27] of claim 27. *See id.* at 228–31, 235–36, 239–40. Regarding claims 9 and 18, the objective evidence of skepticism and failure of others regarding implementing wrist-based pulse oximetry weighs in favor of a finding of non-obviousness. Thus, in view of these underlying findings, taken as a whole, the Commission concludes that Apple has not shown that any of these claims are invalid by clear and convincing evidence. Last, we note that the Commission's conclusion would remain the same even if the objective evidence of skepticism and failure of others regarding implementing wrist-based pulse oximetry was not considered.

D. Written Description Support of Claim 28 of the '502 Patent and Claim 12 of the '648 Patent

The Final ID found that claim 28 of the '502 patent is invalid for lacking written description support as to elements [28A] and [28B] and also found that claim 12 of the '648 patent is invalid for lacking written description support as to elements [8A] and [8B], from which claim 12 depends. *E.g.*, Final ID at 336. The Commission reviewed this finding and requested briefing from the parties. *See* 88 Fed. Reg. at 32244. On review, the Commission reverses the Final ID for the reasoning provided below. In view of this conclusion and the Commission's

MASIMO 2003
Apple v. Masimo
IPR2024-00290

other conclusions herein, the Commission finds that Complainants have shown that Apple violated section 337 as to claims 22 and 28 of the ’502 patent and claim 12 of the ’648 patent, in addition to claims 24 and 30 of the ’648 patent.

1. The Applicable Law

35 U.S.C. § 112 declares that “[t]he specification shall contain a written description of the invention, and of the manner and process of making and using it, in such full, clear, concise, and exact terms as to enable any person skilled in the art to which it pertains, or with which it is most nearly connected, to make and use the same. . . .” 35 U.S.C. § 112. “[T]his statutory language mandates satisfaction of two separate and independent requirements: an applicant must both describe the claimed invention adequately and enable its reproduction and use.” *Amgen Inc. v. Hoechst Marion Roussel, Inc.*, 314 F.3d 1313, 1330 (Fed. Cir. 2003) (citing *Vas-Cath Inc. v. Mahurkar*, 935 F.2d 1555, 1563 (Fed. Cir. 1991)). The purpose of the written description requirement is to “ensure that the scope of the right to exclude, as set forth in the claims, does not overreach the scope of the inventor’s contribution to the field of art as described in the patent specification.” *Univ. of Rochester v. G.D. Searle & Co.*, 358 F.3d 916, 920 (Fed. Cir. 2004).

To comply with the written description requirement, a patent applicant must “convey with reasonable clarity to those skilled in the art that, as of the filing date sought, he or she was in possession of the [claimed] invention.” *Vas-Cath*, 935 F.2d at 1563–64 (emphasis omitted). The test for written description “requires an objective inquiry into the four corners of the specification from the perspective of a person of ordinary skill in the art.” *Ariad Pharm., Inc. v. Eli Lilly & Co.*, 598 F.3d 1336, 1351 (Fed. Cir. 2010) (en banc). “[T]he applicant [for a patent] may employ ‘such descriptive means as words, structures, figures, diagrams, formulas, etc., that fully set forth the claimed invention.’” *In re Skvorecz*, 580 F.3d 1262, 1269 (Fed. Cir. 2009) (citing *In re Alton*, 76 F.3d 1168, 1172 (Fed. Cir. 1996)); *see also Enzo Biochem*, 323 F.3d at

MASIMO 2003
Apple v. Masimo
IPR2024-00290

964 (declaring that the written description may also be met by other "sufficiently detailed, relevant identifying characteristics," such as "physical and/or chemical prope1iies, functional characteristics when coupled with a known or disclosed con-elation between function and structure, or some combination of such characteristics") (emphasis omitted)). Compliance with the written description requirement is a question of fact, and in order to overcome the presumption of validity, a party must set forth clear and convincing evidence. *Centocor Ortho Biotech, Inc.* v. *Abbott Labs.,* 636 F.3d 1341, 1347 (Fed. Cir. 2011).

2. **The Final** ID

As noted above, the Final ID concluded that claim 28 of the '502 patent is invalid for lacking written description suppo1i as to elements [28A] and [28B] and that claim 12 of the '648 patent is invalid for lacking written description suppo1i as to elements [8A] and [8B]. *See* Final ID at 156-70. As shown in the table below, these pairs of claim limitations require two separate sets of LEDs, each with an LED "configured to emit light at a first wavelength" and an LED "configured to emit light at a second wavelength."

Elements [28A] and [28B] of Claim 28 of the '502 Patent	
[28A]	a first set of light emitting diodes (LEDs), the first set of LEDs comprising at least an LED configured to emit light at a first wavelength and an LED configured to emit light at a second wavelength;
[28B]	a second set of LEDs spaced apa1i from the first set of LEDs, the second set of LEDs comprising at least an LED configured to emit light at the first wavelength and an LED configured to emit light at the second wavelength;
Elements [SA] and [SB] of Claim 12 of the '648 Patent	
[SA]	a first set of light emitting diodes (LEDs), the first set comprising at least an LED configured to emit light at a first wavelength and at least an LED configured to emit light at a second wavelength;
[SB]	a second set of LEDs spaced apaii from the first set of LEDs, the second set of LEDs comprising an LED configured to emit light at the first wavelength and an LED configured to emit light at the second wavelength;

MASIMO 2003
Apple v. Masimo
IPR2024-00290

Before the ALJ, Apple argued that the disputed limitations lack written description support because the specifications fail to disclose separate sets of LEDs emitting at the same "first wavelength" and the same "second wavelength." *E.g.*, RPHBr. at 151–52; RPHBr. (Reply) at 75. Apple relied on the testimony of its expert witness, Dr. Warren, who testified that there was no support for these limitations. *See* Tr. (Warren) at 1247:13–17.

In reply, Complainants argued that Dr. Warren's testimony was conclusory and therefore insufficient for Apple to show invalidity by clear and convincing evidence. *E.g.*, CPHBr. at 179. Complainants further argued that their expert, Dr. Madisetti, identified support for the disputed limitations. *See, e.g.*, *id.* (citing Tr. (Madisetti) at 1349:7–1350:3); Final ID at 163. Complainants also relied on the specification, pointing to the two emitters (each having item number "104") depicted in Figures 7A and 7B, as well as, for example, the related disclosure that "the emitter 104 includes sets of optical sources that are capable of emitting visible and near-infrared optical radiation." *See, e.g.*, CPHBr. at 179 (citing JX-0001 ('501 patent[36]) at 12:9–12, Fig. 7A, Fig. 7B). Figure 7B is reproduced below:

[36] As noted above, the '501, '502, and '648 patents share a common specification. The parties agree that citations to the '501 patent are also applicable to the '502 and '648 patents.

MASIMO 2003
Apple v. Masimo
IPR2024-00290

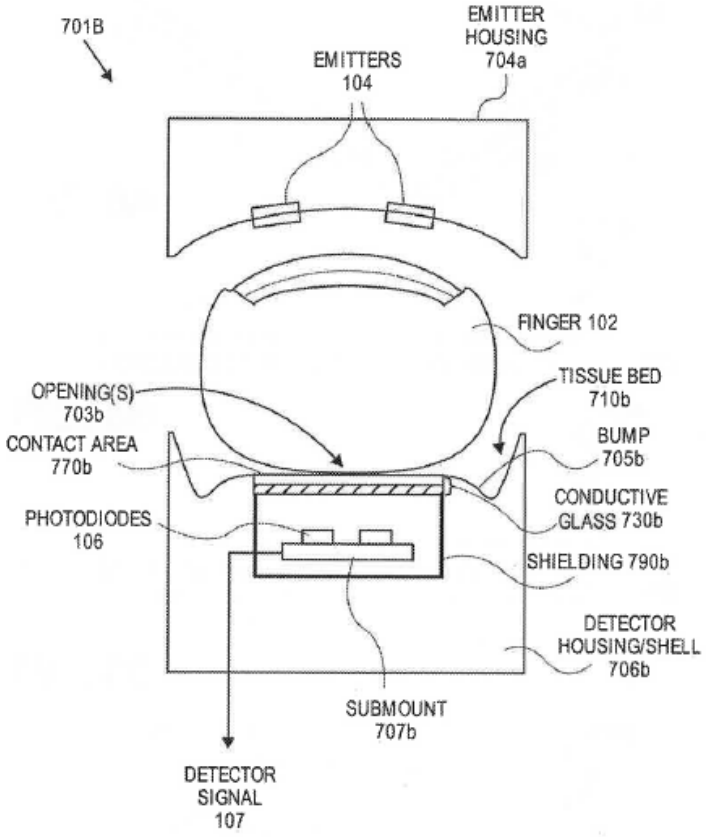

FIG. 7B

JX-0001 ('501 patent) at FIG. 7B. Figure 7A is largely identical to Figure 7B, with the most notable and relevant difference being that, in Figure 7A, the "emitters 104" are indicated as "LEDs 104." Complainants also cited other portions of the specification. *See, e.g.*, CPHBr. at 179–80 (citing JX-0001 ('501 patent) at 9:60–63, 12:13–25, 13:16–21, 21:51–54, 33:30–38, 38:8–22); Final ID at 163.

The Final ID agreed with Apple, concluding that the claim language at issue requires two different matching pairs of wavelengths between the two sets of LEDs. *See* Final ID at 163–65. In other words, the first wavelength of an LED in the first set of LEDs must match the first wavelength of an LED in the second set of LEDs, and the second wavelength of an LED in the first set of LEDs must match the second wavelength of an LED in the second set of LEDs. *See*

id.[37] The Final ID next found that there is no such disclosure in the specifications of the Poeze patents. *See id.* The Final ID acknowledged that, "[w]hen describing emitters that are capable of emitting visible and near-infrared optical radiation, the specification describes two different wavelengths, three different wavelengths, or up to eight different wavelengths," but then found that the "specification does not describe any two LEDs having the same wavelength." *Id.* at 164.

3. Complainants' Petition

In their petition for review, Complainants argued that the Final ID "failed to acknowledge that the presumption of validity carries with it a presumption that the specification has an adequate written description as required by 35 U.S.C. § 112." CPet. at 34. Complainants also argued that the Federal Circuit has repeatedly held that conclusory expert opinion testimony cannot overcome this presumption and the associated burden of "clear and convincing evidence." *See id.* at 34–35 (citing, *inter alia*, *WBIP, LLC v. Kohler Co.*, 829 F.3d 1317, 1338–39 (Fed. Cir. 2016); *Koito Mfg. Co. v. Turn-Key-Tech, LLC*, 381 F.3d 1142, 1155 (Fed. Cir. 2004)). According to Complainants, the Final ID cited no evidence of what a person of ordinary skill in the art would understand from reading the specification, let alone any evidence supporting that a person of ordinary skill in the art would find no written description support for the disputed limitations. *Id*. at 37. Complainants added that the specification "discloses that emitter 104 can include 'sets of optical sources that are capable of emitting visible and near-infrared [light]'—*i.e.*, emitting light at a first wavelength and a second wavelength," and it teaches "exemplary LED sets." *Id.* (citing JX-0001 ('501 patent) at 12:9–12, 4:55–57, 26:32). Complainants further argued that the "specification provides additional examples where the emitter 104 includes sets

[37] Neither party contests this interpretation of the claim language, either in their petitions for review of the Final ID or in their briefing in response to the Commission's notice of review.

MASIMO 2003
Apple v. Masimo
IPR2024-00290

of LEDs to emit light at two or more different wavelengths," including that "emitter 104 can emit [light] at or about 1610 nm, about 1640 nm, *and* about 1665 nm." *Id.* (citing JX-0001 ('501 patent) at 12:38–40, 12:64–13:1, 13:5–7) (emphasis added). Thus, according to Complainants, the specification "discloses an emitter 104 including a set of LEDs that emits light at a first wavelength and a second wavelength." *Id.* (emphasis omitted).

Complainants further argued that Figure 7B shows two such emitters, each labeled 104, and that USPTO rules provide a presumption that each emitter set 104 is identical. CPet. at 38 (citing 37 C.F.R. § 1.84(p)(4)[38]). Complainants then concluded that, by virtue of Figure 7B, the specification "discloses that the first and second wavelengths of the set of LEDs of one emitter 104 are the same as (*i.e.*, match) the first and second wavelengths of the corresponding set of LEDs of the other emitter 104." *Id.* at 39.

4. Apple's Response

In reply, Apple argued that the Final ID properly acknowledged the presumption of validity and properly found that the claim language "does not merely require that there be two sets of LEDs, each emitting light at two different wavelengths," but instead also "requires matching wavelengths in each set of LEDs." RResp. (Summary) at 4. Apple further argued that Dr. Warren's testimony supports that the claims lack written description, and here, "no more elaboration was required." *See* RResp. at 30–31. According to Apple, the only relevant issue was whether the specification disclosed the recited feature, and "there was nothing more that Dr. Warren could have said because, at the time he presented his testimony, Complainants had not

[38] 37 C.F.R. § 1.84(p)(4) recites: "The same part of an invention appearing in more than one view of the drawing must always be designated by the same reference character, and the same reference character must never be used to designate different parts."

MASIMO 2003
Apple v. Masimo
IPR2024-00290

even challenged the point that he confirmed in his testimony—namely, that there was no written description support for two sets of LEDs each with LEDs emitting at the same 'first wavelength' and 'second wavelength.'" *Id.* at 30–32 (citing, *inter alia*, Tr. (Warren) at 1247:13–17; CPreHBr. at 126;[39] CPHBr. at 179–80).

Apple further argued that the Final ID relied on more than just Dr. Warren's testimony by walking "through the portions of the specification that Complainants had identified in their post-hearing briefs" and confirming, based on that analysis, and "consistent with Dr. Warren's testimony, that none [of those cited portions] discloses two sets of LEDs each with LEDs emitting at the same 'first wavelength' and 'second wavelength.'" *Id.* at 32 (citing Final ID at 163–64); *see also id.* at 32–35. Apple also asserted that, in Complainants' petition for review of the Final ID, Complainants "offer[ed a] lengthy, entirely new analysis of the Poeze specification," but this new analysis was allegedly waived for not being presented to the ALJ. *Id.* at 32 (citing, *inter alia*, CPreHBr. at 123–27; CPHBr. at 175–80; Order No. 4 (Ground Rules), at Ground Rules 9.2 and 13.1; *In re Baxter Int'l, Inc.*, 678 F.3d 1357, 1362 (Fed. Cir. 2012)); *see also id.* at 32–35.

5. Analysis

The Commission has determined to reverse the Final ID and conclude that Apple did not carry its burden of proving, by clear and convincing evidence, that claim 28 of the '502 patent and claim 12 of the '648 patent are invalid for lacking written description support. As noted

[39] The Commission notes that, contrary to Apple's argument, Complainants' pre-hearing brief declared: "A [person of ordinary skill in the art] would . . . understand from the disclosure of emitter 'sets' that *corresponding LEDs in each set have the same wavelength* to allow the sensor to collect data from multiple measurement sites with multiple light paths." CPreHBr. at 126 (emphasis added).

MASIMO 2003
Apple v. Masimo
IPR2024-00290

above, because patent claims are presumed valid under 35 U.S.C. § 282, a party challenging the validity of a patent(s), including for lack of written description, must demonstrate by clear and convincing evidence that challenged patents are invalid. *See Hynix Semiconductor Inc. v. Rambus Inc.*, 645 F.3d 1336, 1351 (Fed. Cir. 2011) ("To overcome the presumption of validity of patents, the accused must show that the claims lack a written description by clear and convincing evidence."). The Commission finds that Apple did not meet its burden of proof because it relied on conclusory expert witness testimony and then on attorney argument alone to explain why Complainants' citations to the specification did not provide written description support, *see, e.g.*, RPHBr. (Reply) at 75, and Complainants' citations to the specification and its expert witness's testimony tend to show that the disputed limitations have written description support.

As an initial matter, the Commission agrees with Complainants that Apple's expert's testimony is conclusory. Dr. Warren simply stated:

> Q..... Have you identified any discussion in the Poeze specification of the use of multiple sets of LEDs each with LEDs emitting at a first wavelength and a second wavelength?
>
> A. I have not found one, no.

Tr. (Warren) at 1247:14–17. While, as Apple points out, reliance on expert testimony is not always necessary to find a claim invalid for written description,[40] in this case, Apple's expert witness testimony is conclusory, and, as discussed below, it is not clear from the face of the patents that the disputed claims lack written description. Thus, the expert testimony here is

---

[40] *See* RBr. at 30–31 (citing, *inter alia*, *Centocor*, 636 F.3d 1341, 1347; *Certain Beverage Brewing Capsules, Components Thereof, & Prods. Containing the Same*, Inv. No. 337-TA-929, Comm'n Op., 2016 WL 9751230, at *18 (Apr. 5, 2016), *aff'd by Rivera v. Int'l Trade Comm'n*, 857 F.3d 1315 (Fed. Cir. 2017)).

MASIMO 2003
Apple v. Masimo
IPR2024-00290

distinguishable from that in *Purdue Pharma L.P. v. Faulding Inc.*, 230 F.3d 1320, 1325 (Fed. Cir. 2000), relied upon by the Final ID (*see* Final ID at 164–65), where the trial judge relied on extensive expert testimony and other prior art documents.

Turning to the evidence cited by Complainants to the ALJ, Figures 7A and 7B show two emitters or two LEDs, each labeled 104:

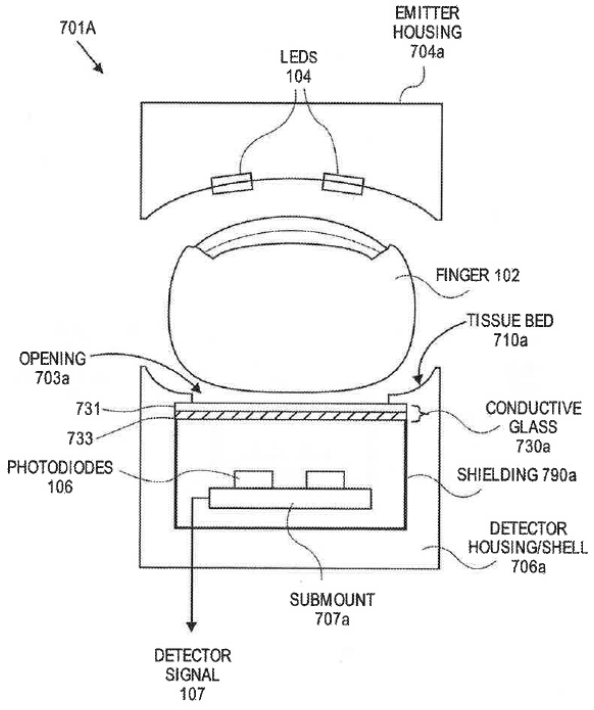

FIG. 7A

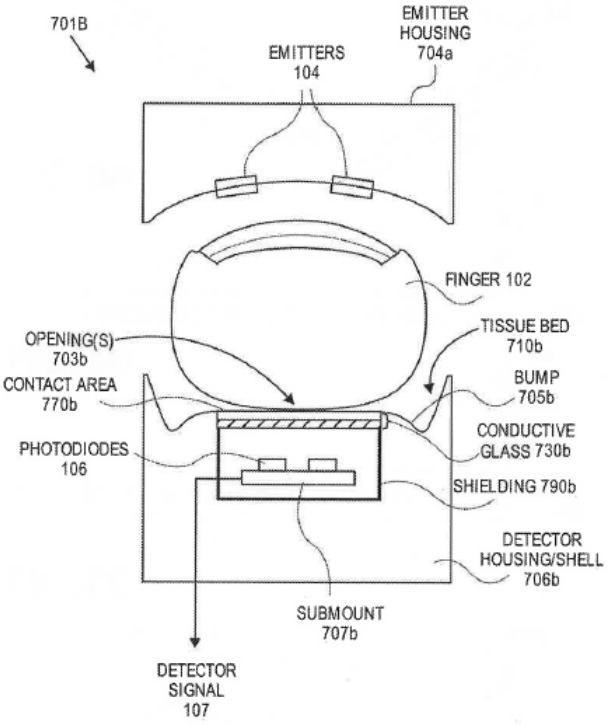

FIG. 7B

See CPHBr. at 179; *E.g.*, JX-0001 ('501 patent) at Figs. 7A, 7B. The fact that the LEDs and the emitters share the number (104) across the two figures, suggests that they are the same (*i.e.*, both can include sets of LEDs). *See, e.g.*, JX-0001 ('501 patent) at 13:16–21 ("[T]he emitter 104 can include sets of light-emitting diodes (LEDs) as its optical source."). Even more than that, within Figure 7A, the two LEDs share the same label "LEDs 104," and within Figure 7B, the two

MASIMO 2003
Apple v. Masimo
IPR2024-00290

emitters share the same label "Emitters 104." This suggests that the two LEDs in Figure 7A are the same, and the two emitters in Figure 7B are the same.[41]

The specifications further explain that: "In an embodiment, the emitter 104 includes sets of optical sources that are capable of emitting visible and near-infrared optical radiation." *E.g.*, JX-0001 ('501 patent) at 12:9–12; *see also, e.g.*, *id.* at 9:60–63, 13:16–21; Tr. (Madisetti) at 1349:7–1350:3. If the two sets of LEDs or the two emitters having sets of optical sources are the same, then they must emit the same visible and near-infrared optical radiation, *i.e.*, at the same two respective wavelengths. At a minimum, the specifications do not clearly and convincingly show that these respective wavelengths of visible and near-infrared optical radiation are different between the identically-labelled LEDs or optical emitters.

Apple also responds that "'visible and near-infrared light' are not specific wavelengths," and thus the sets of LEDs do not include matching pairs of wavelengths. *See* RBr. at 52–53. The Commission agrees with Apple that "visible light" and "near-infrared light" both refer to ranges of wavelengths. However, because Figures 7A and 7B each show two sets of the same LEDs or optical emitters, the Commission finds that the LEDs/optical emitters in the first set would emit the same light as the LEDs/optical emitters in the second set. The fact that this disclosure *could be* interpreted by a skilled artisan, as Apple suggests, to encompass situations where the first LED set emits visible light at one wavelength and near-infrared at a second wavelength, and the second LED set emits visible light at a third wavelength and near-infrared

---

[41] The Commission's conclusion is based on the specifications themselves, not on 37 C.F.R. § 1.84(p)(4), which Complainants cited for the first time in their petition for review of the ALJ's Final ID. Thus, while the parties contest whether a waiver by Complainants prevents the Commission from relying on that rule, those arguments are moot because, in view of the specifications, the Commission need not and does not rely on that rule.

light at a fourth wavelength, does not mean that this is how a skilled artisan would understand the disclosure, especially when there is no testimony to this effect. Again, at a minimum, the specifications do not clearly and convincingly show that these respective wavelengths of visible and near-infrared optical radiation are not the same between the sets of LEDs/optical emitters.

Thus, in view of Complainants' above-discussed citations to the specification and Apple's conclusory expert testimony, the Commission concludes that Apple has not met its burden of proof to show by clear and convincing evidence that Complainants did not convey with reasonable clarity to those skilled in the art that, as of the filing date sought, the applicants were in possession of the claimed inventions.

In their petition for review and in their briefing to the Commission, Complainants cite additional passages from the specification that, although not necessary to sustain the Commission's conclusion, further support it. CBr. at 42–48 (citing JX-0001 ('501 patent) at 4:55–57, 9:4–6, 12:5–9, 12:26–32, 12:38–40, 12:64–13:6, 13:21–25, 29:19–22, 33:26–36). Apple alleges that Complainants waived reliance on these passages because Complainants cite these passages for the first time in their petition for review. The Commission notes, however, that these passages are intrinsic evidence within the four corners of the patent and they merely reinforce Complainants' general argument to the ALJ. *See, e.g.*, Order No. 4 (Ground Rules), EDIS Doc. ID 752396, at Ground Rule 13.1 (Initial Post-hearing Briefs; Filing and Content) (declaring only an *issue* is waived when that *issue* is not "included in the pre-hearing brief"). Thus, under these circumstances, the Commission declines to find Complainants' reliance on this evidence waived.

Complainants' newly-cited passages of the specification show that, in Figure 7B, each emitter 104 includes sets of LEDs that can emit light "at or about 1610 nm, about 1640 nm, *and*

MASIMO 2003
Apple v. Masimo
IPR2024-00290

about 1665 nm." JX-0001 ('501 patent) at 12:38–40 (emphasis added); *see also, e.g.*, CBr. at 42–48. Complainants additionally rely on JX-0001 ('501 patent) at 4:55–57, 9:4–6, 12:5–9, 12:26–32, 12:38–40, 12:64–13:6, 13:21–25, 29:19–22, 33:26–36. Complainants reason that Figure 7B shows two emitters, so each emitter 104 would have an LED with *each* of those three wavelengths, *i.e.*, at or about 1610 nm, at or about 1640 nm, *and* at or about 1665 nm, JX-0001 ('501 patent) at 12:5–9, 12:38–40, and thus the two emitters include at least matching pairs of wavelengths.[42] *Id.* at 43–44. This evidence further confirms the Commission's conclusion that Apple has not shown by clear and convincing evidence that the relevant claims are invalid for lacking written description support.[43]

---

[42] Regarding the wavelengths disclosed in these passages, Apple argues that the passages relate to measuring "analytes like glucose," not "oxygen" or "oxygen saturation," as the claims require, and thus those teachings cannot provide written description support here. *See* RBr. at 51–52 (citing JX-0001 ('501 patent) at 12:26–44). The Commission, however, agrees with Complainants that the specific wavelengths mentioned in the specification are "irrelevant because specific wavelengths are not claimed," as the "claims merely recite that the two wavelengths used in the first set of LEDs—whatever they may be—are the same wavelengths used in the second set." CBr. (Reply) at 26. Other portions of the specification, including those cited by Complainants, recite that the emitters 104 can have other matching wavelengths. JX-0001 ('501 patent) at 12:60–13:7 ("Due to the different responses of analytes to the different wavelengths, certain embodiments of the data collection system 100 can advantageously use the measurements at these different wavelengths to improve the accuracy of measurements.").

[43] Chairman Johanson would not reverse the ALJ's well-reasoned determination that claim 28 of the '502 patent and claim 12 of the '648 patent are invalid for lacking written description support.

The written description requirement "is part of the *quid pro quo* of the patent grant and ensures that the public receives a meaningful disclosure in exchange for being excluded from practicing an invention for a period of time." *Ariad*, 598 F.3d at 1354. While the requirement does not demand any particular form of disclosure, "a description that merely renders the invention obvious does not satisfy the requirement." *Id.* at 1352.

In finding support for disputed claims in the original specification, the majority relies heavily on the specification's teaching that "[i]n an embodiment, the emitter 104 includes sets of optical sources that are capable of emitting visible and near-infrared optical radiation," JX-0002 ('502 patent) at col. 12:9–12, and Figures 7A and 7B. The majority, noting that Figure 7B has two structures designated 104, concludes that "[i]f the two sets of LEDs or the two emitters

MASIMO 2003
Apple v. Masimo
IPR2024-00290

E. Claim Construction and Infringement Regarding the ’745 Patent

The Final ID found that the Accused Products have not been shown to infringe claims 9 or 27 of the ’745 patent. *E.g.*, Final ID at 336. The Commission determined to review this finding of the Final ID. *See* 88 Fed. Reg. at 32244. On review, the Commission has determined to affirm the Final ID without modification, thus adopting the Final ID’s analysis.

F. The Domestic Industry Issues Under Review—The Poeze Patents and the ’745 Patent

The Final ID found that the technical prong of the domestic industry requirement has been satisfied for claim 12 of the ’501 patent, claim 28 of the ’502 patent, claims 12, 24, and 30 of the ’648 patent, and claim 18 of the ’745 patent, and that the economic prong of the domestic industry requirement has been satisfied with respect to the ’501, ’502, ’648, and ’745 patents.

---

having sets of optical sources are the same, then they must emit the same visible and near-infrared optical radiation.” There is, however, no teaching that the emitters are the same. *See* Final ID at 164 (“there is no disclosure of two separate sets of LEDs using the same wavelengths in each set”). Rather, the specification and figures use “emitters” as a broad term for any light source of any frequency. Indeed, element 104 is used inconsistently in the figures relied upon by the majority. *Compare* Figure 7A with 7B.

Moreover, both Figures 7A and 7B depict embodiments that differ meaningfully from that of claim 28 of the ’502 patent (which requires four photodiodes with aligned openings) or claim 12 of the ’648 patent (similar limitations). This suggests a failure to describe each claim as an “integrated whole.” *Novozymes A/S v. DuPont Nutrition Biosciences APS*, 723 F.3d 1336, 1349 (Fed. Cir. 2013) (“Taking each claim—as we must—as an integrated whole rather than as a collection of independent limitations, one searches the 2000 application in vain for the disclosure of even a single species that falls within the claims.”).

The majority further relies on Respondents’ expert testimony being “conclusory.” This is not persuasive. Caselaw is plain that no expert testimony is necessary to show a failure to comply with the written description requirement. *See, e.g.*, *Centocor*, 636 F.3d at 1347. Further, Complainants’ expert testimony lacks any discussion of the import of the disclosure found in column 12 relied on by the majority. *See* Tr. (Madisetti) at 1350:22–1352:4.

Considered as a whole, the evidence suggests that these late added claims (added by amendment years after the original priority date) reach beyond any disclosure fairly described by the specification and figures. Accordingly, Chairman Johanson would affirm the ALJ’s determination that these claims are not fully supported by the original disclosure.

MASIMO 2003
Apple v. Masimo
IPR2024-00290

E.g., Final ID at 336. The Commission detennined to review these findings of the Final ID. *See* 88 Fed. Reg. at 32244.

On review, the Commission has detennined to take no position regarding the Final !D's findings as to (1) whether post-Complaint evidence can be considered in satisfying the domestic industry requirement in this case with respect to the '501, '502, '648, and '745 patents; and (2) whether Complainants had shown a domestic industry in the process of being established. *See* 19 U.S.C. § 1337(a)(2); *Beloit,* 742 F.2d at 1423; *see also, e.g.,* Final ID at *56-59,,* 62 n.16, 85-87, 209,302 n.116, 319,324.

The Commission affnms, however, the Final !D's finding that Complainants have shown the existence of a domestic industry by way of significant employment of labor with respect to Masimo's investments in research and development for the Masimo Watch, but with the following modified reasoning. Final ID at 317-18.

The Final ID found that Complainants' employment of labor was significant, in pa.ii, because it involved I employees [redacted] full-time equivalents) representing over-percent of Masimo's research and development engineers. Final ID at 317. The Commission additionally finds that Complainants' employment of labor is quantitatively significant because the identified employment of labor is [redacted] percent domestic. As the Final ID found,- research and development of the Masimo Watch has occurred in the United States. *Id.* (citing CPHBr. at 307); *see also* Tr. (Kiani[44]) at 321:23-322:5 (testifying that reseai·ch and development occuned in Ilvine, Califomia).[45]

---

[44] Joe Kiani is the chai1man and chief executive officer of Masimo and Cercacor. *E.g.,* Final ID at 5.

[45] The Final ID recognized that Complainants presented evidence regarding approximately-in payments to ce1iain third-paiiy fnms for "design" work on the

MASIMO 2003
Apple v. Masimo
IPR2024-00290

The Commission finds that the fact that research and development of the Masimo Watch occurs [redacted] percent in the United States, combined with the qualitative significance of research and development to the Masimo Watch (Final ID at 318), shows that Complainants' employment of labor is significant. *See* Final ID at 317 (citing *Gas Spring Nailer Prods. & Components Thereof,* Inv. No. 337-TA-1082, Comm'n Op. at 83 (Apr. 28, 2020) (finding quantitative significance where "all, *i.e.,* 100 percent, of Kyocera's R&D and engineering expenditures relating to complainant's [domestic industiy products] occurs in the United States"), *vacated and remanded on other grounds, Kyocera Senco Indus. Tools v. Int'l Trade Comm'n,* 22 F.4th 1369 (Fed. Cir. 2022)).

The Commission othe1wise affnms the Final !D's domestic industiy analysis as to the '501, '502, '648, and '745 patents, including the Final !D's finding that Complainants' plant and equipment investments were not significant. *See* Final ID at 315. Because the Final ID found that Complainants satisfied the domestic industiy requirement as to these patents based only on pre-Complaint investments, the Commission dete1mines that Complainants have satisfied the domestic industiy requirement as to the '501, '502, '648, and '745 patents based on an "existing" domestic industiy. *See* 19 U.S.C. § 1337(a)(3).

Masimo Watch *(see* CBr. at 26), but did not credit that evidence towards a domestic industiy because it was unclear if those fnms perfo1med design work in the United States. Final ID at 313-14. However, even if nts were directed to foreign labor, they are an order of magnitude smaller than the- employment of research and development labor at Masimo's U.S. facilities. *Id.* (finding that "these ex enditures are relatively small in comparison to Masimo's R&D expenditures"). Thus, the of Complainants' employment of labor is domestic and Complainants' domestic industiy is therefore significant.

MASIMO 2003
Apple v. Masimo
IPR2024-00290

V. REMEDY, THE PUBLIC INTEREST, AND BONDING

The Commission has determined to issue an LEO and a CDO. Both remedial orders include a service, repair, and replacement exemption (discussed below in the context of the public interest), and will go into effect, without delay, at the end of the period of Presidential review. The Commission has concluded that the public interest does not counsel against providing Complainants this remedy. The Commission has also determined that the bond during the period of Presidential review shall be in the amount of zero percent (0%, *i.e.*, no bond) of the entered value of the articles subject to the LEO.

A. Remedy

The Commission has "broad discretion in selecting the form, scope, and extent of the remedy." *Viscofan, S.A. v. US. Int'l Trade Comm'n*, 787 F.2d 544, 548 (Fed. Cir. 1986).

1. Limited Exclusion Order

As discussed below, the Commission has determined to issue an LEO directed to covered products that infringe any of claims 22 and 28 of the '502 patent and claims 12, 24, and 30 of the '648 patent. The LEO includes the standard certification provision; includes a service, repair, and replacement exemption for infringing articles purchased prior to the expiration of the period of Presidential review; and is to go into effect without delay.

a. The Applicable Law

Section 337(d)(1) provides that "[i]f the Commission determines, as a result of an investigation under this section, that there is a violation of this section, it shall direct that the articles concerned, imported by any person violating the provision of this section, be excluded from entry into the United States, unless, after considering the [public interest], it finds that such articles should not be excluded from entry." 19 U.S.C. § 1337(d)(1).

MASIMO 2003
Apple v. Masimo
IPR2024-00290

b. The RD

Before the ALJ, Complainants requested that the Commission issue an LEO to remedy Apple's section 337 violation. *E.g.*, RD at 1; CPHBr. at 310–11. For its part, Apple argued that any LEO should include an exemption for "the continued service, repair, or replacement of previously purchased products, including software maintenance and updates." *E.g.*, RD at 1; RPHBr. at 279. Apple further requested that any LEO include the standard certification provision and be no broader in scope than the scope of the investigation. *E.g.*, RD at 1–2; RPHBr. at 175, 279.

The RD recommended that any LEO be directed to Apple's importation of infringing wearable electronic devices with light-based pulse oximetry functionality and components thereof. RD at 2 (citing 86 Fed. Reg. at 46275 (defining scope of investigation)). The RD additionally declared that the record at the time did not include evidence to support an exemption for service, repair, or replacement. *Id.* at 2–3. The ALJ further recommended that any LEO include the standard certification provision. *Id.* at 3–4 (citing *Certain Composite Aerogel Insulation Materials & Methods for Manufacturing the Same*, Inv. No. 337-TA-1003, Comm'n Op. at 62–63, EDIS Doc. ID 637154 (Feb. 22, 2018); RPHBr. at 279). In doing so, the RD properly recognized that any non-adjudicated redesigns would not be subject to certification. *Id.* at 4 (citing *Certain Automated Teller Machines, ATM Modules, Components Thereof & Prods. Containing the Same*, Inv. No. 337-TA-972, Comm'n Op. at 26–27 and n.18, EDIS Doc. ID 613988 (June 12, 2017)).

c. The Parties' Arguments

In their briefing to the Commission, Complainants again request that the Commission issue an LEO. *See* CBr. at 87–88. Complainants accept the RD's recommendation that the LEO include a certification provision. *See id.* (citing RD at 4). Complainants further declare that the

MASIMO 2003
Apple v. Masimo
IPR2024-00290

LEO should not include any exemption for a service, repair, or replacement for the reasons it discusses related to the public interest, discussed below. *See id.* at 88; *see also* CBr. (Reply) at 42–43. Complainants additionally argue that the LEO should state that no infringing articles should be allowed to be imported for any purpose, including the importation of any unreleased products for "engineering validation testing," "design validation testing," or "product validation testing" prior to commercial launch. CBr. at 88. Complainants further argue that the Commission should reject Apple's request for an enforcement delay. *See* CBr. (Reply) at 40–41.

Apple argues that, for public interest reasons (discussed below), the Commission should decline to issue a remedy, or at least suspend enforcement of any remedy for twelve months and/or include an exemption allowing for the service, repair, and replacement of customers' Apple Watches. *E.g.*, RBr. at 88–90, 67–72. Apple additionally declares that any LEO should contain the standard certification provision. *See id.* at 90–91. Apple further argues that Complainants' "proposed LEO and CDO fail to conform the orders with the scope of the Investigation as defined in the Notice of Investigation: 'wearable electronic devices with light-based pulse oximetry functionality and components thereof.'" *Id.* at RBr. (Reply) at 49 (quoting 86 Fed. Reg. at 46276) (citing *Certain Automated Mechanical Transmission Sys.*, Inv. No. 337-TA-503, Comm'n Op. at 4 (May 9, 2005)). Apple further points out Complainants' requested remedial orders improperly seek to cover "hardware and *software* components thereof." *Id.* (quoting CBr. at Appx. A, B) (Apple's emphasis). Regarding "software components," Apple argues that those, as "electronic transmissions," are outside the scope of the Commission's jurisdiction. *Id.* (citing *ClearCorrect Operating, LLC v. Int'l Trade Comm'n*, 810 F.3d 1283, 1286 (Fed. Cir. 2015)). Apple further addresses Complainants' assertion that any LEO should provide "that no infringing articles should be imported for any purpose." *Id.* at 50 (quoting CBr.

MASIMO 2003
Apple v. Masimo
IPR2024-00290

at 88). Apple declares that it is "unaware of any instance in which the Commission has included such additional language in the past, and Complainants offer no proper basis to do so in this case." *Id.*

d. Analysis

The Commission has determined to issue an LEO directed to covered products that infringe any of claims 22 and 28 of the '502 patent and claims 12, 24, and 30 of the '648 patent. Consistent with standard practice, the Commission defines "covered products" in accordance with the plain language description of the accused products in the Complaint (*see* 19 C.F.R. § 210.10(b)(1)), which is "wearable electronic devices with light-based pulse oximetry functionality and components thereof." 86 Fed. Reg. at 46276. The Commission also agrees with Apple that the LEO (and CDO) should not cover "software components." *See* RBr. (Reply) at 49 (citing *ClearCorrect*, 810 F.3d at 1286 (Fed. Cir. 2015)); *see also, e.g.*, *Certain Wearable Electronic Devices with ECG Functionality & Components Thereof*, Inv. No. 337-TA-1266, Comm'n Op. at 50 n.33 (Jan. 20, 2023) ("Commission exclusion orders, however, do not extend to electronic transmissions.").

The issued LEO also includes the standard certification. Neither party has shown a valid basis for deviating from the Commission's standard practice. Complainants argue that the LEO should include language that "clarifies that Apple cannot use the certification procedure for redesigns that have not been adjudicated as non-infringing." *See* CBr. at 87. While the Commission declines to adopt that language as part of the Order itself, as the RD correctly recognized, the standard certification does not apply to redesigns that have not been adjudicated as non-infringing. *See* RD at 4 (citing *Automated Teller Machines*, Inv. No. 337-TA-972, Comm'n Op. at 26–27 (including n.18) ("The standard certification language does not apply to redesigns that have not been adjudicated as non-infringing." (Internal quotations removed))).

Should the Commission or U.S. Customs and Border Protection ("CBP") later determine that a redesigned article presented for adjudication does not infringe, the certification provision can operate to exempt those articles.

Complainants argue that the LEO should explicitly state that no infringing articles should be allowed to be imported "for any purpose." CBr. at 88. However, Complainants have shown no valid reason for why the Commission's LEO should include this non-standard language. Moreover, Complainants' request is inconsistent with section 337, which does not allow the Commission to bar, for example, products "imported by and for the use of the United States." 19 U.S.C. § 1337(l).

For the reasons discussed below in the context of the public interest,[46] the LEO includes a service, repair, and replacement exemption. *See infra* section V.B.4.a.iii. However, also for the reasons discussed below in the context of the public interest, the Commission denies Apple's request that the LEO be subject to a twelve-month delay.

2. Cease and Desist Order

As discussed below, the Commission has determined to issue a CDO directed to Apple and covered products that infringe any of claims 22 and 28 of the '502 patent and claims 12, 24, and 30 of the '648 patent. The CDO includes a service, repair, and replacement exemption for

[46] Commissioner Kearns disagrees with the Commission majority's position that public interest is the sole statutory ground for exemptions from the scope of remedial orders. As he explained in *Certain Cloud-Connected Wood-Pellet Grills & Components Thereof*, Inv. No. 337-TA-1237 ("*Grills*") (joined by Commissioner Karpel), the Commission's reviewing court has stated that the Commission has "broad discretion in selecting the form, scope, and extent of the remedy." *Grills,* Comm'n Op. at 11–12 (including n.10) (May 24, 2022). Moreover, they observed that "the Commission has repeatedly indicated that it has granted warranty and repair exemptions 'when unopposed, in view of the public interest, or upon some showing of a need for service and repair.'" *Grills*, Comm'n Op. at 11 n.10.

MASIMO 2003
Apple v. Masimo
IPR2024-00290

infringing articles purchased prior to the expiration of the period of Presidential review, and the CDO is to go into effect without delay.

a. The Applicable Law

Section 337(f)(1) provides that in addition to, or in lieu of, the issuance of an exclusion order, the Commission may issue a CDO as a remedy for a violation of section 337. *See* 19 U.S.C. § 1337(f)(1). CDOs are generally issued when, with respect to the imported infringing products, the respondents maintain commercially significant inventories in the United States or have significant domestic operations that could undercut the remedy provided by an exclusion order.[47] *See, e.g.*, *Certain Table Saws Incorporating Active Injury Mitigation Technology & Components Thereof*, Inv. No. 337-TA-965, Comm'n Op. at 4–6 (Feb. 1, 2017); *Certain Protective Cases & Components Thereof*, Inv. No. 337-TA-780, USITC Pub. No. 4405, Comm'n Op. at 28 (Nov. 19, 2012) (citing *Certain Laser Bar Code Scanners & Scan Engines, Components Thereof & Prods. Containing Same*, Inv. No. 337-TA-551, Comm'n Op. at 22 (June 24, 2007)). Complainants bear the burden on this issue: "[a] complainant seeking a [CDO] must demonstrate, based on the record, that this remedy is necessary to address the violation found in the investigation so as to not undercut the relief provided by the exclusion order." *Table Saws*, Inv. No. 337-TA-965, Comm'n Op. at 5 (citing *Certain Integrated Repeaters, Switches,*

[47] When the presence of infringing domestic inventory or domestic operations is asserted as the basis for a CDO under section 337(f)(1), Commissioner Schmidtlein does not adopt the view that the inventory or domestic operations needs to be "commercially significant" in order to issue the CDO. *See, e.g.*, *Certain Magnetic Tape Cartridges and Components Thereof*, Inv. No. 337-TA-1058, Comm'n Op. at 65 n.24 (Apr. 9, 2019); *Table Saws*, Inv. No. 337-TA-965, Comm'n Op. at 6 n.2 (Feb. 1, 2017). In Commissioner Schmidtlein's view, the presence of some infringing domestic inventory or domestic operations, regardless of its commercial significance, provides a basis to issue a CDO. *Id.*

MASIMO 2003
Apple v. Masimo
IPR2024-00290

Transceivers, & Prods. Containing Same, Inv. No. 337-TA-435, USITC Pub. No. 3547 (Oct. 2002), Comm'n Op. at 27 (Aug. 16, 2002); H.R. REP. No. 100-40, at 160 (1987)).

b. The RD

Before the ALJ, Complainants sought a CDO based on evidence of Apple's significant inventory of Accused Products. *E.g.*, RD at 4 (citing CPHBr. at 311). For its part, Apple argued that any CDO should include service, repair, and replacement exemption that permits "the continued service, repair, or replacement of previously purchased products, including software maintenance and updates." *Id.* (quoting RPHBr. at 279).

The RD found that "[t]here is no dispute that Apple maintains a significant commercial inventory of Accused Products." *Id.* at 5 (citing CPHBr. at 311; CX-0128C at ¶ 5). The RD further found that there is also "evidence that Apple has significant domestic operations, because Apple is headquartered in California and has over 75,000 U.S. employees." *Id.* (citing RStmt.). Thus, the RD recommended the issuance of a CDO against Apple. *Id.*

c. The Parties' Arguments

Complainants request that the Commission issue a CDO directed to Apple. *See* CBr. at 87–88. The parties make the same arguments as to the scope of the CDO that they made for the LEO. *See id.* at 88; RBr. at 88–90, 67–72. Apple does not dispute the RD's findings that it maintains a significant commercial inventory of Accused Products and has significant domestic operations. *See generally* RBr.; RBr. (Reply); *see also* RD at 5.

d. Analysis

The Commission has determined to issue a CDO directed to Apple and covered products that infringe any of claims 22 and 28 of the '502 patent and claims 12, 24, and 30 of the '648

MASIMO 2003
Apple v. Masimo
IPR2024-00290

patent.[48] The Commission adopts the undisputed findings in the RD that Apple maintains a commercially significant inventory of Accused Products and has significant domestic operations. RD at 5; *see also generally* RBr. (not disputing that it maintains a commercially significant inventory or has significant domestic operations); RBr. (Reply) (same). The issued CDO directs Apple to cease and desist from conducting any of the following activities in the United States: importing, selling, offering for sale, marketing, advertising, distributing, transferring (except for exportation), soliciting United States agents or distributors, and aiding or abetting other entities in the importation, sale for importation, sale after importation, transfer (except for exportation), or distribution of wearable electronic devices with light-based pulse oximetry functionality and components thereof that infringe claims 28 of the '502 patent or any of claims 12, 24, and 30 of the '648 patent. The language of the CDO is consistent with the Commission's standard practice of using the plain language description of the accused products in the Complaint as the definition of "covered products." *See* 19 C.F.R. § 210.10(b)(1). The scope of the CDO, like the LEO, is discussed below in the context of the public interest.

B. Public Interest

To prevent any harm from the remedial orders to the public health and welfare and to United States consumers, the Commission's LEO and CDO each include a service, repair, and replacement exemption. In view of this exemption, the public interest factors do not counsel against providing Complainants a remedy. Apple has not shown any reason why the Commission should delay the enforcement of its remedy.

---

[48] Commissioner Schmidtlein agrees that a CDO should issue directed to Respondent Apple, but she differs from the majority with respect to the basis for that determination. *See supra* note 47 ("[T]he presence of some infringing domestic inventory or domestic operations, regardless of its commercial significance, provides a basis to issue a CDO.").

MASIMO 2003
Apple v. Masimo
IPR2024-00290

1. The Applicable Law

Section 337 requires that the Commission, upon finding a violation of section 337, issue an LEO "unless, after considering the effect of such exclusion upon the public health and welfare, competitive conditions in the United States economy, the production of like or directly competitive articles in the United States, and United States consumers, it finds that such articles should not be excluded from entry." 19 U.S.C. § 1337(d)(l). Similarly, the Commission must consider these public interest factors before issuing a CDO. 19 U.S.C. § 1337(f)(1).

Under appropriate facts and circumstances, the Commission may determine that no remedy should issue because of the adverse impacts on the public interest. *See, e.g.*, *Certain Fluidized Supporting Apparatus & Components Thereof*, Inv. Nos. 337-TA-182/188, USITC Pub. 1667, Comm'n Op. at 1–2, 23–25 (Oct. 1984) (finding that the public interest warranted denying complainant's requested relief). Moreover, when the circumstances of a particular investigation require, the Commission has tailored its relief in light of the statutory public interest factors. For example, the Commission has allowed continued importation for ongoing medical research, exempted service parts, grandfathered certain infringing products, and delayed the imposition of remedies to allow affected third-party consumers to transition to non-infringing products. *E.g.*, *Certain Microfluidic Devices*, Inv. No. 337-TA-1068 Comm'n Op. at 1, 22–48, 53–54 (analyzing the public interest, discussing applicable precedent, and ultimately issuing a tailored LEO and a tailored CDO); *Certain Road Milling Machines & Components Thereof*, Inv. No. 337-TA-1067, Comm'n Op. at 32–33 (July 18, 2019) (exempting service parts); *Certain Baseband Processor Chips & Chipsets, Transmitter, & Receiver (Radio) Chips, Power Control Chips, & Prods. Containing Same, Including Cellular Tel. Handsets*, 337-TA-543, USITC Pub. No. 4258, comm'n Op. at 150–51 (Oct. 2011) (grandfathering certain products); *Certain*

MASIMO 2003
Apple v. Masimo
IPR2024-00290

Personal Data & Mobile Comm'n Devices & Related Software, 337-TA-710, USITC Pub. No. 4331, Comm'n Op., at 72–73, 80–81 (June 2012) (delaying imposition of remedy).

The statute requires the Commission to consider and make findings on the public interest in every case in which a violation is found regardless of the quality or quantity of public interest information supplied by the parties. *See* 19 U.S.C. § 1337(d)(l), (f)(l). Thus, the Commission publishes a notice inviting the parties as well as interested members of the public and interested government agencies to gather and present evidence on the public interest at multiple junctures in the proceeding. *See* 19 U.S.C. § 1337(d)(l) & (f)(l).

2. Non-Party Comments on the Public Interest

The Commission's solicitation of public interest comments following the ALJ's RD (88 Fed. Reg. 6312, 6312–13 (Jan. 31, 2023)) resulted in numerous submissions on the public interest from non-parties, including:

(1) Public Interest Comments of David Albert, EDIS Doc. ID 790883 (Feb. 22, 2023) ("Albert Stmt.");

(2) Public Interest Statement of the Alliance for U.S. Startups and Inventors for Jobs, EDIS Doc. ID 791674 (Mar. 3, 2023) ("Alliance for U.S. Startups Stmt.");

(3) Statement of Non-Party American Heart Association on the Public Interest of the Recommended Remedial Orders But Not in Support of Any Party, EDIS Doc. ID 791476 (Mar. 1, 2023) ("AHA Stmt.");

(4) Public Interest Letter from the Honorable Ken Buck, Henry C. Johnson, Jr., and Katie Porter, EDIS Doc. ID 791047 (Feb. 23, 2023) ("Buck Stmt.");

(5) Public Interest Comments from C4IP, EDIS Doc. ID 791567 (Mar. 2, 2023) ("C4IP Stmt.");

(6) Public Interest Comments of Bill Carpou from Octane, EDIS Doc. ID 790962 (Feb. 23, 2023) ("Carpou Stmt.);

(7) Statement of Third Party Computer and Communications Industry Association in Response to the Commission's January 31, 2023, Notice of Request for Statements on the Public Interest, EDIS Doc. ID 791054 (Feb. 23, 2023) ("CCIA Stmt.");

MASIMO 2003
Apple v. Masimo
IPR2024-00290

(8) Public Interest Statement of Consumer Federation of America, EDIS Doc. ID 791163 (Feb. 27 2023) ("CFA Stmt.");

(9) Public Comments from California Life Sciences, EDIS Doc. ID 791012 (Feb. 23, 2023) ("CLS Stmt.");

(10) Letter of Support from Cure HHT, EDIS Doc. ID 790394 (Feb. 15, 2023) ("Cure HHT Stmt.");

(11) Public Interest Statement of David Dinielli and Michael Enseki-Frank, EDIS Doc. ID 791686 (Mar. 3, 2023) ("Dinielli Stmt.");

(12) Public Interest Statement of Ryan Drant from Questa Capital, EDIS Doc. ID 790991 (Feb. 23, 2023) ("Drant Stmt.");

(13) Public Interest Statement of Non-Party Mitchell Goldstein, M.D., EDIS Doc. ID 791179 (Feb. 27, 2023) ("Goldstein Stmt.");

(14) Public Interest Comments from Innovation Alliance, EDIS Doc. ID 791048 (Feb. 23, 2023) ("Innovation Alliance Stmt.");

(15) Public Interest Statement of Josh Malone, EDIS Doc. ID 790787 (Feb. 21, 2023) ("Malone Stmt.");

(16) Christopher McCarthy Public Interest Statement Points Supporting Masimo, EDIS Doc. ID 789080 (Feb. 1, 2023) ("McCarthy Stmt.");

(17) Public Interest Statement of Non-Party of Medical Device Manufacturers Association (MDMA), EDIS Doc. ID 791167 (Feb. 27, 2023) ("MDMA Stmt.");

(18) Public Interest Statement of Richard Milani, M.D., EDIS Doc. ID 791665 (Mar. 2, 2023) ("Milani Stmt.");

(19) Statement of Third Party Law Professors Adam Mossof and Kristen Osenga in Response to the Commission's Notice of Request for Statements on the Public Interest and Reply to Respondent's Statement of February 22, 2023, EDIS Doc. ID 791069 (Feb. 23, 2023) ("Mossof Stmt.");

(20) National Jewish Health Support for the Apple Watch for Use in Tracking Physiologic Features in Medical Patients, EDIS Doc. ID 790602 (Feb. 17, 2023) ("NJH Stmt.," letter authored by Russell Bowler, M.D., Ph.D.);

(21) Cynthia Persaud Comments for Inv. 337-1276, EDIS Doc. ID 789338 (Feb. 3, 2023) ("Persaud Stmt.");

(22) Public Interest Statement of Non-Party Peter Pronovost, M.D., EDIS Doc. ID 791162 (Feb. 27, 2023) ("Pronovost Stmt.");

(23) Public Interest Statement of Non-Party Patient Safety Movement Foundation, EDIS Doc. ID 791175 (Feb. 27, 2023) ("PSMF Stmt.," letter authored by Dr. Michael Ramsay);

(24) Stanford University Medical Center Letter in Support of Apple Watch, EDIS Doc. ID 791060 (Feb. 23, 2023) ("Stanford Stmt.," letter authored by Stephen Ruoss, MD);

(25) StopAFib.org Letter of Support, EDIS Doc. ID 790642 (Feb. 21, 2023) ("StopAFib.org Stmt.");

(26) University of Michigan Health Letter of Support for Apple Watch, EDIS Doc. ID 790641 (Feb. 21, 2023) ("Univ. of Mich. Stmt.," letter authored by Jessica R. Golbus MD, MS);

(27) Public Interest Comments of US Inventor, Inc., EDIS Doc. ID 791041 (Feb. 23, 2023) ("US Inventor Stmt.");

(28) Dr. Robert M. Watcher Letter in Support of Apple and Public Interest, EDIS Doc. ID 790510 (Feb. 16, 2023) ("Wachter Stmt.");

(29) Public Interest Statement of Kevin R. Ward, MD, EDIS Doc. ID 790884 (Feb. 22, 2023) ("Ward Stmt.");

(30) Comments from Dr. Adam Waddell, MD, EDIS Doc. ID 789029 (Jan. 31, 2023) ("Waddell Stmt.");

(31) Public Interest Statement of Non-Party Bobby Yazdani, EDIS Doc. ID 791177 (Feb. 27, 2023) ("Yazdani Stmt.").

The Commission's notice of review (88 Fed. Reg. at 32243–46 (May 19, 2023)) also resulted in several submissions from third parties:

(1) Public Interest Comments from Council for Innovation Promotion (C4IP), EDIS Doc. ID 797854 (June 5, 2023) ("C4IP Comments");

(2) Public Interest Comments from Hugh Calkins, M.D., EDIS Doc. ID 797827 (June 5, 2023) ("Calkins Comments");

(3) Public Interest Comments from Nelson Freimer, M.D., EDIS Doc. ID 797817 (June 5, 2023) ("Freimer Comments");

(4) Public Interest Comments from Calum A. MacRae, MD, PhD, EDIS Doc. ID 797826 (June 5, 2023) ("MacRae Comments");

(5) Public Interest Comments from Rod S. Passman, M.D., M.S.C.E., EDIS Doc. ID 797813 (June 5, 2023) ("Passman Comments");

(6) Comments on Public Interest from Leslie A. Saxon, M.D., EDIS Doc. ID 797811 (June 5, 2023) ("Saxon Comments");

(7) Public Interest Comments from Professors Francisco J. Valero-Cuevas, PhD and Najmedin Meshkati, PhD, CPE, EDIS Doc. ID 798257 (June 12, 2023) ("Valero-Cuevas Comments").

The Commission has considered all of these submissions in making its final determination.

3. Whether Apple is Collaterally Estopped from Arguing the Merits of the Public Interest

As a preliminary matter, Complainants allege that Apple is collaterally estopped from arguing the merits of its public interest arguments. *E.g.*, CBr. at 56–57. As discussed below, the Commission disagrees.

a. The Parties' Arguments

Complainants argue that Apple should be estopped from arguing the merits of the public interest, reasoning that Apple already presented its arguments to the Commission in *Wearable Electronic Devices*, Inv. No. 337-TA-1266, where the Commission concluded that the public interest did not weigh against excluding the infringing Apple Watches.[49] *See* CBr. at 56–57. Complainants argue that the Commission has previously applied collateral estoppel when: (1) the issue decided in the prior litigation is identical to that before the tribunal; (2) the issue was actually litigated in the prior proceeding; (3) the resolution of the issue in the prior litigation was necessary to its resulting judgment; and (4) the party against whom collateral estoppel is

[49] In that investigation, the complainant (AliveCor, Inc.) accused the Apple Watch Series 4, 5, 6, and 7. *Wearable Elec. Devices*, Inv. No. 337-TA-1266, Comm'n Op. at 9. The Commission issued remedial orders with a service, repair, and replacement exemption, although the remedial orders remain suspended pending final resolution of the complainant's appeal of the USPTO's final written decisions finding the asserted claims invalid. *See id.* at 86–87.

MASIMO 2003
Apple v. Masimo
IPR2024-00290

asserted had a full and fair opportunity to litigate its position. *Id.* at 56 (citing *Certain Three-Dimensional Cinema Sys*. & *Components Thereof*, Inv. No. 337-TA-939, EDIS Doc. ID 588763, Comm'n Op. at 53 (Aug. 23, 2016)). According to Complainants, all of those elements are satisfied here, and the Commission therefore should likewise conclude that no public interest concerns warrant denying their requested remedy. *See id.* at 56–57.

In reply, Apple asserts that collateral estoppel does not apply here. *See* RBr. (Reply) at 35–36. Apple reasons that the public interest issues now at issue are different from the ones in *Wearable Electronic Devices*, Inv. No. 337-TA-1266, where Commission briefing was completed months earlier and related to a different feature. *Id.* at 35. Apple further alleges that, in assessing the "propriety of remedial orders, the Commission should consider public interest issues on an ongoing basis, based on the present facts." *Id.* Apple points out that the Commission has never applied collateral estoppel regarding the public interest, and Apple further asserts that the Commission has rejected the application of estoppel to the public interest in the past. *Id.* (citing, *inter alia*, *Certain Mobile Elec. Devices & Radio Frequency & Processing Components Thereof (II)*, Inv. No. 337-TA-1093, Final ID, 2019 WL 2058009, at *23 (Mar. 26, 2019)). Apple further argues that the particular public interest questions "posed in the Commission's Notice of Review indicate that issues specific to this Investigation will bear on the Commission's findings," and the Commission should therefore consider that briefing. *Id.* at 36.

b. Analysis

The Commission concludes that collateral estoppel does not bar Apple from arguing the merits of the public interest. The statutory language of section 337 requires the Commission to consider the public interest in each investigation before issuing a remedy. *See, e.g.*, 19 U.S.C. § 1337(d)(1) ("If the Commission determines, as a result of an investigation under this section, that there is a violation of this section, it shall direct that the articles concerned . . . be excluded

MASIMO 2003
Apple v. Masimo
IPR2024-00290

from entry . . . *unless, after considering* the effect of such exclusion upon the [public interest factors], it finds that such articles should not be excluded from entry." (Emphasis added)). Relying on the Commission's decision in previous investigations alone does not satisfy the statutory mandate to consider the public interest. *See Microfluidic Devices*, Inv. No. 337-TA-1068, Comm'n Op at 28 ("[T]he statute requires the Commission to consider and make findings on the public interest in every case in which a violation is found."), 28 n.25 ("The Commission has a statutory duty to consider the public interest."). While the Commission's reasoning in *Wearable Electronic Devices* is in some instances applicable here (as discussed below), the Commission will consider Apple's arguments anew. Furthermore, unlike the arguments in *Wearable Electronic Devices*, the public interest arguments here involve both the Apple Watches' blood oxygen feature and electrocardiogram ("ECG") recording feature. Moreover, any estoppel would be inapplicable to non-party comments.

4. The Public Interest Factors

a. Public Health and Welfare

In general, Apple argues that Complainants' requested remedy will adversely affect the public health and welfare because it will "prevent consumers and medical researchers from future access not only to the Blood Oxygen feature[50] that Complainants have accused of infringement, but also to a host of other health, wellness, and safety features—including ones known to be lifesaving." RBr. at 83. Apple primarily points to the ECG recording feature that was at issue in *Wearable Electronic Devices*, Inv. No. 337-TA-1266. Apple further explains that, "[i]n addition to numerous consumer connectivity functions—including cellular capability,

[50] The "Blood Oxygen feature" refers to the infringing pulse oximetry feature.

MASIMO 2003
Apple v. Masimo
IPR2024-00290

messaging, email, access to the Internet, and navigation," the Apple Watches subject to exclusion "also offer the IRN[51] feature and the ECG app, which provide notification of a potentially fatal cardiac condition (atrial fibrillation)[52] and allow users to monitor their heart rhythm and share the data with their doctors." *Id.* Apple further argues that Complainants' proposed exclusion order would also be a "major setback for medical research, where Apple Watch plays a critical role." *Id.* at 84.

Apple additionally argues that any remedial order should include a service, repair, and replacement exemption for consumers who have permissibly obtained an Apple Watch with the accused blood oxygen feature. *E.g.*, *id.* at 74. Apple also argues that the enforcement of any remedial order should be delayed for twelve months to "allow other device manufacturers to scale up their production capacity and address supply chain constraints that will limit supply of alternatives" and to "allow Apple sufficient time to prepare and implement its proposed design-around, and to allow the design-around to go through the necessary approval process." *E.g.*, *id.* at 89.

As discussed below, the Commission has determined that any adverse effect on the public health and welfare from the Commission's remedial orders can be mitigated by the provided service, repair, and replacement exemption. There are numerous reasonable substitutes for infringing Apple Watches available in the United States for both Apple Watch users who use the devices for personal, health-related use and for users who are using infringing Apple Watches to participate in medical studies. Additionally, the Commission's remedial orders, in view of the

---

[51] "IRN" stands for "irregular rhythm notification." The Apple Watch SE, which is not subject to the Commission's remedial order includes the IRN feature. *See* RBr. at 84 n.51.

[52] "Atrial fibrillation" is sometimes abbreviated herein as "AFib."

MASIMO 2003
Apple v. Masimo
IPR2024-00290

service, repair, and replacement exemption, will have no meaningful effect on medical research. Last, Apple has not shown the need for any delay in the enforcement of the Commission's remedy.

i. Reasonable Substitutes

a) The Parties' Arguments

Apple's Arguments

Regarding the scope of reasonable substitutes, Apple asserts that the Accused Products "include numerous features pertinent to public health and public welfare, and relevant to the reasonable substitute inquiry," such as: (1) they are smartwatches (*i.e.* they have "features similar to a smartphone," including telecommunications and location-sharing capabilities and accessibility features that may assist the hearing or visually-impaired); (2) they are "fitness tracking devices"; and (3) they are "health and wellness devices" that include, for example, ECG, IRN, and HHRN[53] features, and have also been authorized by the FDA. RBr. at 64–66. Apple declares that, "[b]ecause the Accused Apple Watches are multi-featured devices intended to serve a wide spectrum of potential users, consumers purchase the Accused Apple Watches to obtain different combinations of the above-described features." *Id.* at 66; *see also id.* at 66–67. And, according to Apple, while "[o]ther smartwatches . . . share some functionality with Apple Watches," they "may lack crash-detection or AFib History, and many of them lack ECG, temperature tracking, and/or fall detection features." *Id.* at 70. Apple further argues that Complainants erroneously "attempt to narrow the range of features relevant to the public interest inquiry to only 'health, safety, and wellness features.'" RBr. (Reply) at 40 (citing

[53] "HHRN" stands for "high heart rate notification." The non-infringing Apple Watch SE includes this feature. *See* CBr. (Reply) at Ex. 93 (McGavock Declaration) at ¶ 39 (Table 1).

MASIMO 2003
Apple v. Masimo
IPR2024-00290

Thermoplastic-Encapsulated Motors, Inv. No. 337-TA-1073, RD, 2018 WL 10758211, at *5 (Nov. 27, 2018); *Elec. Digital Media Devices*, Inv. No. 337-TA-796, Comm'n Op., 2013 WL 10734395 at *80 (Nov. 27, 2018)). Apple explains that "[t]he protected interest is the public's ability to access the numerous relevant features in the Accused Apple Watches, just as the public was interested in accessing the relevant active safety system functionality in *Certain Table Saws*." *Id.* at 42.

Apple specifically argues that Masimo's W1 Watch should not be considered a reasonable substitute because (1) it is not available to U.S. consumers in "any material quantity," (2) it is not a "smartwatch," (3) it allegedly has not been shown to "reliably measure physiological parameters," and (4) it is allegedly not manufactured in sufficient quantity to meet the demand created by an exclusion order. RBr. at 63.

Complainants' Arguments

Complainants argue that "reasonable substitutes" should be defined the same way as in *Wearable Electronic Devices*, *i.e.*, as watches with a "range of health, safety, and wellness features." CBr. at 81 (citing *Wearable Elec. Devices*, Inv. No. 337-TA-1266, Comm'n Op. at 75). Complainants explain that, under *Table Saws*, a "reasonable substitute" is defined by the "protected interest" in the features benefitting the public health and welfare. *Id.* (citing *Table Saws*, Inv. No. 337-TA-965, Comm'n Op. at 3). Complainants then declare that the public health and welfare is not impacted by consumers' inability to have smartwatches generally, and thus, "reasonable substitutes" should be defined as they were in *Wearable Electronic Devices*. *See* CBr. (Reply) at 37.

Regarding specific substitutes, Complainants rely in part on following chart from the Commission's Opinion in *Wearable Electronic Devices*, Inv. No. 337-TA-1266:

MASIMO 2003
Apple v. Masimo
IPR2024-00290

TABLE 1: SELECTED SMARTWATCH FEATURES PROMOTED BY DEVICE MANUFACTURERS

	Apple		Competitors				
	Apple Watch (Series 8) [A]	Apple Watch (SE 2nd Gen) [B]	Samsung Galaxy (Watch 5) [C]	Fitbit (Sense2) [D]	Fossil (Gen 6) [E]	Garmin (Venu 2 Plus) [F]	Zepp (Amazfit GTS4) [G]
GPS	✓	✓	✓	✓	✓	✓	✓
Emergency SOS Capability	✓	✓	✓	×	×	✓	×
Water Resistant	✓	✓	✓	✓	✓	✓	✓
Speaker and Microphone	✓	✓	✓	✓	✓	✓	✓
24+ Hour Battery Life	✓	✓	✓	✓	✓	✓	✓
iOS Compatability	✓	✓	×	✓	✓	✓	✓
Cellular Connectivity	✓	✓	✓	✓	✓	✓	✓
Personalizable Design	✓	✓	✓	✓	✓	✓	✓
Health Functions							
ECG	✓	×	✓	✓	×	×	×
HHRN	✓	✓	✓	✓	-	✓	✓
IRN	✓	✓	-	✓	-	✓	✓
Low Cardio Fitness Notifications	✓	✓	-	✓	✓	✓	✓
Blood Oxygen	✓	×	✓	✓	✓	✓	✓
Fall Detection	✓	✓	✓	×	×	✓	✓
Crash Detection	✓	✓	✓	×	×	✓	✓
Wrist Temperature	✓	×	✓	✓	×	×	×
Sleep Monitoring	✓	✓	✓	✓	✓	✓	✓

CBr. at 83; *Wearable Elec. Devices*, Inv. No 337-TA-1266, Comm'n Op. at 77. Complainants point out that most of these watches offer the blood oxygen feature and at least the Samsung Galaxy (Watch 5) and Fitbit (Sense 2) include an ECG recording feature. Complainants allege that "[a]ll of the wearables manufactured by third parties identified in the above chart would be reasonable substitutes for the infringing Apple Watches." *Id.* Aside from reliance on *Wearable Electronic Devices*, Complainants argue:

> Garmin's vivoactive®, Fenix®, epix™, Venu®, and Forerunner® series all have watches that include a blood oxygen feature. Google's Pixel watch[ ] includes a blood oxygen feature. Samsung's Galaxy 5 watch contains a blood oxygen feature. The Fitbit Versa 4™, Sense 2™, and Charge 5™ also contain blood oxygen features. The Fossil Gen6 contains a blood oxygen feature as well. These smartwatches contain many of the features found in the Apple Watch and many sell at lower prices. Masimo's W1, available directly to consumers, offers continuous clinical-grade pulse oximetry as well as other health features. It is currently used in hospitals as well, outside the United States. . . . Masimo's Freedom smartwatch will also include pulse oximetry and other health features and is expected to launch in the Fall of this year. Moreover, Masimo offers its

MASIMO 2003
Apple v. Masimo
IPR2024-00290

> blood oxygen sensor as a module to third parties who can integrate the module in their own smartwatches.
>
> Numerous other competitive products are reasonable substitutes for the ECG functionality of the infringing products. This includes the Garmin Venu 2 Plus, Google Pixel, Samsung Galaxy 5, Fitbit Sense 2, and Fitbit Charge 5. As the Commission held in [*Wearable Electronic Devices*], the public's interest in these health features of the Apple Watch is insufficient to overcome the statutory remedy given the availability of competing substitutes.

Id. at 64–65 (citations and footnotes omitted).

Complainants also specifically argue that Masimo's W1 Watch is a reasonable substitute for the infringing Apple Watches because it offers many of the same health features that the public would be interested in having access to, including blood oxygen measurements. *See* CBr. at 83–84. Complainants point out that the Final ID found that the W1 Watch can reliably measure physiological parameters, such as blood oxygen levels. *Id.* (citing, *inter alia*, Final ID at 60–63); *see also id.* at 38–39. Complainants further argue that the W1 Watch should not be outside the scope of reasonable alternatives for not being produced in a sufficient quantity alone to meet all consumer demand created by any exclusion order because the Commission does not require any alleged substitute to satisfy that demand alone. *See* CBr. (Reply) at 37.

Complainants further argue that there is no evidence that other manufacturers of suitable alternatives do not have capacity to meet consumer demands." CBr. (Reply) at 39; *see also id.* at 39–41. Complainants point out that Apple itself could manufacture its Apple Watch SE, "which contains virtually all the same features as the infringing products, or return to producing the Apple Watch Series 4 or 5, which also included ECG," but not blood oxygen measurements. *Id.* (citing CBr. Ex. 93 at ¶¶ 22–24).

b) Non-Party Comments

Some researchers stated that other devices can replace Apple Watches:

MASIMO 2003
Apple v. Masimo
IPR2024-00290

> Given our combined expertise in the theory, design, financing, execution, and dissemination of medical research, we see no reason why it is not possible to replace the Apple Watch in pending health applications with alternative wearable devices from *Fitbit, Withings, Garmin* and others that are able to provide human motion, heart function and oxygen saturation information. Several of these companies also readily provide the Application Programming Interface (API) code that allows connectivity and data transfer to the investigator's systems.

Valero-Cuevas Comments, EDIS Doc. ID 798257, at 2; *see also id.* at 2–3. Other researchers, medical professionals, and commenters submitted filings indicating a preference for Masimo's technology, with some going so far as discouraging reliance on Apple's blood oxygen saturation feature. *See, e.g.*, McCarthy Stmt., EDIS Doc. ID 789080; Waddell Stmt., EDIS Doc. ID 789029; Albert Stmt., EDIS Doc. ID 790883; Ward Stmt., EDIS Doc. ID 790884; Yazdani Stmt., EDIS Doc. ID 791177; Goldstein Stmt., EDIS Doc. ID 791179; MDMA Stmt., EDIS Doc. ID 791167; PSMF Stmt., EDIS Doc. ID 791175; Pronovost Stmt., EDIS Doc. ID 791162.

Still other researchers indicated a preference for the Apple Watch. *See, e.g.*, NJH Stmt., EDIS Doc. ID 790602, at 1; Passman Comments, EDIS Doc. ID 797813, at 1–2; Freimer Comments, EDIS Doc. ID 797817, at 1–2; Calkins Comments, EDIS Doc. ID at 797827, at 1–2; MacRae Comments, EDIS Doc. ID 797826, at 1–2; Saxon Comments, EDIS Doc. ID 797811, at 1–2; AHA Stmt., EDIS Doc. ID 791476, at 3.

c) Analysis

The Commission assesses the scope of reasonable alternatives from the perspective of public interest concerns raised in an investigation. *See Wearable Electronic Devices*, Inv. No. 337-TA-1266, Comm'n Op. at 73–74 (assessing the scope of reasonable substitutes from the perspective of each of the three public interest concerns raised by Apple); *Table Saws*, Inv. No. 337-TA-965, Comm'n Op. at 9 ("The protected [public health and welfare] interest here is the public's ability to purchase table saws with [active injury management technology ('AIMT')]

MASIMO 2003
Apple v. Masimo
IPR2024-00290

functionality, not the ability to purchase AIMT table saws with a specific feature set that is unrelated to the efficacy of the AIMT functionality."). The Commission notes that Apple argues, regarding the public health and welfare, that the Apple Watches' ECG feature should also be considered because all accused Apple Watches that have the blood oxygen feature also have the ECG feature, and thus an exclusion order affecting blood oxygen feature-containing Apple Watches would also result in the exclusion of ECG feature-containing Apple Watches. RBr. at 60. Therefore, for the purposes of the public health and welfare factor, because the ECG feature is a health related feature, the Commission considers the scope of "reasonable substitutes" to include substitutes that offer a wide range of health, safety, and wellness features, including those that allow consumers to measure blood oxygen levels and that can record ECGs, although a single device need not have the capability to measure both oxygen levels and record ECGs. *See Wearable Electronic Devices*, Inv. No. 337-TA-1266, Comm'n Op. at 75. While it is not ideal for an individual or research participant to wear two wearable electronic devices to obtain all of the desired features, the inconvenience of doing so is not significant enough to rise to the level of a public interest concern, especially in view of the countervailing interest of protecting intellectual property rights. *See, e.g.*, *Certain Two-Handle Centerset Faucets & Escutcheons & Components Thereof*, Inv. No. 337-TA-422, Comm'n Op. at 9 (July 21, 2000); *Microfluidic Devices*, Inv. No. 337-TA-1068, Comm'n Op. at 45–46.

Apple stretches the public health and welfare public interest factor too far by seeking to require reasonable substitutes for this factor to also have telecommunications features, location tracking features, "smart" wallet and keys features, and accessibility features. The connection to the public health and welfare with those features is too attenuated to rise to the level of a public interest concern, especially when some of those alleged Apple Watch features require a paired

MASIMO 2003
Apple v. Masimo
IPR2024-00290

iPhone (which can independently perform many of those functions). *See* CBr. (Reply) at 37. And again, "[t]he correct assessment . . . for 'reasonable substitutes for the devices subject to the exclusion order,' [is] not whether 'every consumer cannot obtain the exact device desired.'" *Fitness Devices*, Inv. No. 337-TA-1265, Comm'n Op., at 85 (quoting *Elec. Digital Media Devices*, Inv. No. 337-TA-796, Comm. Op. at 120, and citing *Table Saws*, Inv. No. 337-TA-965, Comm'n Op. at 9).[54]

In view of the above, the scope of reasonable substitutes for the public health and wellness factor in this investigation include: Masimo's W1 and Freedom Watches (blood oxygen feature), Google's Pixel watch (blood oxygen and ECG features),[55] Samsung Galaxy Watch 5 (blood oxygen and ECG features),[56] Fitbit (Versa 4™ (blood oxygen feature), Sense 2™ (blood oxygen and ECG features), and Charge 5™ (blood oxygen and ECG features)),[57]

---

[54] While "reasonable substitutes" also considers "price points," *Table Saws*, Inv. No. 337-TA-965, Comm'n Op. at 8, Apple appears to allege that price point is an issue regarding only Masimo's soon-to-be-released Freedom Watch. While the Freedom Watch will be priced higher than the base infringing Apple Watch models (*see* RBr. at Ex. 3 at ¶ 25 ($999 for the Freedom Watch compared to the Apple Watch Series 8, which starts at $399)), infringing Apple Watch models can be comparable in price ($799) based on consumer choices (*see* RBr. at 77 (citing, *inter alia*, RBr. at Ex. 4 (Watkins Decl.) at ¶ 21; RX-0333 at .0011). Other reasonable substitutes are even more comparable in price. For example, the Garmin Venu® 2 Plus is available for $449, s*ee* CBr. at Ex. 49 (https://www.garmin.com/en-US/p/730659), and the Garmin vivoactive® is available for $349, *see* CBr. at Ex. 7 (https://www.garmin.com/en-US/p/643399).

[55] CBr. at Ex. 12 (https://store.google.com/product/google_pixel_watch_specs?hl=en-US); CBr. at Ex. 50 (https://support.google.com/googlepixelwatch/answer/12759285?hl=en).

[56] CBr. at Ex. 13 (https://www.gadgetstowear.com/measure-blood-oxygen-on-galaxy-watch-5/); CBr. at Ex. 51 (https://www.androidcentral.com/wearables/measure-ecg-samsung-galaxy-watch-5).

[57] CBr. at Ex. 14 (https://www.fitbit.com/global/us/products/smartwatches/versa4?sku=523BKBK); CBr. at Ex. 52 (https://help.fitbit.com/articles/en_US/Help_article/2457.htm).

MASIMO 2003
Apple v. Masimo
IPR2024-00290

Fossil (Gen 6) (blood oxygen feature),[58] Garmin (vivoactive® (blood oxygen feature),[59] Fenix® (blood oxygen feature),[60] epix™ (blood oxygen feature),[61] Venu® (blood oxygen feature),[62] Venu® 2 Plus (ECG feature),[63] and Forerunner®[64] series (blood oxygen feature)), and Zepp (Amazefit GTS4). *See* CBr. at 64–66; CBr. (Reply) at 37 (citing *Wearable Elec. Devices*, Inv. No. 337-TA-1266, Comm'n Op. at 37). These watches (alone or combined with each) include one or both of the blood oxygen features and the ECG features (as well as the IRN, HHRN, or other features), and thus are reasonable substitutes.[65]

The Commission agrees with Complainants that the W1 Watch can serve as a reasonable substitute for the infringing Apple Watches as to the public health and welfare factor. *See, e.g.*, CBr. (Reply) at 38–39. In protesting against the suitability of this product, Apple asserts that the W1 Watch "has not been shown to reliably measure physiological parameters." RBr. at 68.

---

[58] CBr. at Ex. 15 (https://www.fossil.com/en-us/watches/learn-more/gen-6-wellness/).

[59] CBr. at Ex. 7 (https://www.garmin.com/en-US/p/643399).

[60] CBr. at Ex. 8 (https://www.garmin.com/en-US/p/735542).

[61] CBr. at Ex. 9 (https://www.garmin.com/en-US/p/760778).

[62] CBr. at Ex. 10 (https://www.garmin.com/en-US/p/801643).

[63] CBr. at Ex. 49 (https://www.garmin.com/en-US/p/730659).

[64] CBr. at Ex. 11 (https://www.garmin.com/en-US/p/886785).

[65] We note that Complainants argue, in response to Apple's arguments regarding the ECG feature, that the Apple Watch SE should be considered a reasonable substitute for purposes of the public health and welfare factor because it was considered a substitute in *Wearable Electronic Devices*, Inv. No. 337-TA-1266. *E.g.*, CBr. at 66. However, in that investigation, the record included specific, reliable evidence that the Apple Watch SE, when combined with accessories, could be used to record ECGs and therefore was a reasonable substitute. *E.g.*, *Wearable Elec. Devices*, Inv. No. 337-TA-1266, Comm'n Op. at 75–76 (including n.39). Complainants point to no such evidence in the record in this investigation. Accordingly, the Commission rejects this argument.

MASIMO 2003
Apple v. Masimo
IPR2024-00290

However, the Final ID properly found that "the variation in the measurements [of oxygen saturation by the W1 Watch] appears to be consistent with FDA guidance regarding pulse oximetry." Final ID at 62 n.18. And, regarding Masimo's Freedom Watch, Masimo's Chief Operating Officer, Bilal Muhsin, stated in a declaration:

> In Fall 2023, Masimo intends to launch the Masimo Freedom smartwatch. The Masimo Freedom grew out of the Masimo W1, and will also provide clinical-grade pulse oximetry, as well as unparalleled real-time health indicators such as pulse rate, and unique scores and indexes such as Hydration Index, and Stress Index. The Masimo Freedom will be capable of measuring all the same variables as the Masimo W1, but will also include other traditional smartwatch capabilities, and safety features such as fall detection.

CBr. at Ex. 53 at ¶ 5. Apple acknowledges that the Freedom Watch is a planned replacement for the W1 Watch. *See* RBr. at 87, 88 n.54 (noting a March 28, 2023 Masimo press release regarding pre-sale launch of the Freedom Watch). Thus, the Freedom Watch is also a reasonable substitute.

ii. The Remedial Orders Will Have at Most a Minimal Adverse Effect on Medical Research

In brief, the Commission finds that its remedial orders will have, at most, a minimal adverse effect on medical research.

a) The Parties' Arguments

Apple's Arguments

Apple argues that Complainants' requested remedial orders will adversely affect medical studies using the infringing blood oxygen feature, as well as studies using the ECG recording feature, of the accused Apple Watches. *See* RBr. at 57–62. Apple reasons that studies using the Apple Watches' ECG feature should also be considered in assessing impact on the public health and welfare because all accused Apple Watches that have the blood oxygen feature also have the ECG feature, and thus an exclusion order affecting blood oxygen feature-containing Apple

Watches would also result in the exclusion of ECG feature-containing Apple Watches. *See id*. at 60. Apple further alleges that a "key benefit of [the] Apple Watch for . . . studies is that researchers can use the multiple health and wellness metrics available through the Accused Apple Watches (as opposed to a single data field), helping to advance scientific discovery by identifying how various metrics relate to certain conditions." *Id.* at 58. Apple points to several specific studies. *See id.* at 57–61. Apple further points to certain research areas for which it believes the accused Apple Watches "could potentially be impactful," including those related to racial disparities in pulse oximetry measurement accuracy. *Id.* at 59–60. Apple further argues that "the broad availability of [the] Apple Watch to consumers enables researchers more generally to conduct decentralized research, which helps promote higher enrollment and more diverse patient populations." *Id.* at 61. Apple thus concludes that the Commission should find that Complainants' requested remedial orders would undermine important medical studies, and because it would allegedly not be practical to tailor any remedial orders to permit the importation or sale of Apple Watch models for use in clinical trials and other medical research, the Commission should deny Complainants a remedy altogether. *See id.* at 62.

Complainants' Arguments

Complainants acknowledge that ClinicalTrials.gov, a governmental database of clinical trials maintained by the U.S. National Library of Medicine, lists 109 studies that use or have used the Apple Watch, including 67 that remain ongoing. CBr. at 77 (citing CBr. at Ex. 24 and Ex. 25). However, Complainants state that most of these ongoing studies focus on heart rate features that are also available on the Apple Watch SE, which the parties agree would not be subject to exclusion. *Id.* Complainants declare that, while nine studies use the blood oxygen feature of the infringing Apple Watches, none of those studies will be affected by any exclusion

MASIMO 2003
Apple v. Masimo
IPR2024-00290

order because they have already ended, are conducted outside of the United States, and/or do not require pulse oximetry measurements specifically from the infringing Apple Watches (as opposed to reasonable substitutes). *See id.* at 78–79; *see also* CBr. (Reply) at 30–35. As for studies using the ECG feature, Complainants argue that the Commission already rejected those arguments made by Apple in *Wearable Electronic Devices*, Inv. No. 337-TA-1266. *See* CBr. (Reply) at 30. Last, Complainants address Apple's argument that the "broad availability of Apple Watch to consumers enables researchers more generally to conduct decentralized research." *Id.* at 36 (quoting RBr. at 61). In response, Complainants assert that there are reasonable substitutes available, "including the Apple Watch SE and third-party devices from Samsung, Google, Fitbit, and others." *Id.* (citing CBr. at 64–67, 82–84; CBr. at Ex. 93 at Table 1, ¶¶ 28–39).

b) Non-Party Comments

Some non-party researchers have stated that the Apple Watch is important to their studies. *See, e.g.*, NJH Stmt., EDIS Doc. ID 790602, at 1 ("[M]y research group has found the Apple Watch to be an exceptional device that accurately measures important parameters such as heart rate, physical activity, and oxygen saturation."); Stanford Stmt., EDIS Doc. ID 791060, at 1 ("The oxygen saturation feature of the Apple Watch is a highly accurate device feature, with performance characteristics fully comparable to medical device standards for oximeters."); Passman Comments, EDIS Doc. ID 797813, at 1–2 ("[I]f Apple Watch is excluded for an extended period of time, our REACT-AF study and other critical research that uses this technology will be altogether shut down."); Freimer Comments, EDIS Doc. ID 797817, at 1–2; Calkins Comments, EDIS Doc. ID at 797827, at 1–2; MacRae Comments, EDIS Doc. ID 797826, at 1–2; Saxon Comments, EDIS Doc. ID 797811, at 1–2; AHA Stmt., EDIS Doc. ID 791476, at 3–4.

On the other hand, some researchers have stated that other devices can replace infringing Apple Watches:

> Given our combined expertise in the theory, design, financing, execution, and dissemination of medical research, we see no reason why it is not possible to replace the Apple Watch in pending health applications with alternative wearable devices from *Fitbit, Withings, Garmin* and others that are able to provide human motion, heart function and oxygen saturation information. Several of these companies also readily provide the Application Programming Interface (API) code that allows connectivity and data transfer to the investigator's systems.

Valero-Cuevas Comments, EDIS Doc. ID 798257, at 2; *see also id.* at 2–3. Other researchers and commenters have expressed a preference for Masimo's technology and even discouraged the reliance on Apple's blood oxygen feature. *See* Ward Stmt., EDIS Doc. ID 790884, at 2 ("I am . . . very concerned about the proliferation of 'medical devices' like the Apple Watch with pulse oximetry. These are not 'medical devices' as the FDA would use the term. Indeed, I understand only software associated with the ECG feature of certain Apple Watches is FDA cleared. . . . Despite this, it is my belief that confusion abounds in that many patients and medical professionals believe or at least use devices such as the Apple Watch as if they are FDA approved."); *see also* Goldstein Stmt., EDIS Doc. ID 791179.

c) Analysis

The Commission finds that the remedial orders will have only a minimal effect on formally planned or ongoing medical studies that will not rise to the level that warrants denying a remedy.[66]

---

[66] Recall that Apple asserts that it "would not be practical to tailor any remedial orders to permit importation or sale of Apple Watch models for use in clinical trials and other medical research." RBr. at 62.

MASIMO 2003
Apple v. Masimo
IPR2024-00290

First, even without the service, repair and replacement exemption, any limited exclusion order would cover only new imports of infringing Apple Watches after the expiration of the period of Presidential review (estimated to be late 2023) until the earlier of Apple's clearance of a redesign or the expiration of the patents subject to the section 337 violation (August 2028). *See Wearable Elec. Devices*, Inv. No. 337-TA-1266, Comm'n Op at 70–71. Thus, the Commission's remedy will not prevent current study participants using infringing Apple Watches from continuing to participate in research studies. *See id*. Further, with this exemption, current research study participants who are using infringing Apple Watches who encounter a need for service, repair, or replacement of their device to continue participation in that study will be able to obtain such service, repair, or replacement. *See id.* Moreover, as Complainants point out, there is little evidence of ongoing studies that require infringing Apple Watches, as opposed to any of the many reasonable alternative devices (discussed above). *See* CBr. at 77–79; CBr. (Reply) at 31–35. Thus, ongoing research studies that are not enrolling new participants will not be affected by the Commission's remedial orders.

Second, the Commission's remedial orders will have at most a minimal adverse effect on ongoing studies that remain open to new participants. As just noted, the Commission's remedy will not prevent current study participants using infringing Apple Watches from continuing to participate in research studies using those infringing devices. *See Wearable Elec. Devices*, Inv. No. 337-TA-1266, Comm'n Op. at 70–71. Also as just noted, current owners of infringing Apple Watches will not lose their devices as a result of the Commission's remedial orders, and the Commission's remedial orders will also allow those owners to have their products serviced, repaired, or replaced. Moreover, potential new participants who already own or may own infringing Apple Watches as of the date the Commission's remedial orders become final within

MASIMO 2003
Apple v. Masimo
IPR2024-00290

the meaning of 19 U.S.C. § 1337(j)(4) will still be able to participate in those studies. *See id.* And the record reflects that there are at least [redacted] such potential participants. *See* RBr. at Ex. 6 (Dippon[67] Decl. [redacted]. Furthermore, the [redacted] figure undercounts the number of potential participants because it does not capture approximately a year's-worth of imports of infringing Apple Watches. Thus, to the extent any study depends on having a large number of participants with infringing Apple Watches, a large number of potential participants is already present in the United States. Additionally, the record includes no specific evidence providing a reasoned basis why the already large number of infringing Apple Watches in the United States is insufficient for any such study. In any event, as Complainants point out, there is little evidence of ongoing studies that are accepting new participants who are located inside of the United States. *See* CBr. at 77–79; CBr. (Reply) at 31–35. In sum, the Commission's remedial orders will have at most a minimal adverse effect on ongoing studies that remain open to new participants.

Third, the Commission's remedial orders will also have, at most, a minimal adverse effect on formally planned but not yet started studies that are enrolling participants. As noted above, there are likely well over [redacted] potential participants in the United States, and the Commission's orders will also allow those owners to have their products serviced, repaired, or replaced. Thus, to the extent any studies depend on having a large number of participants with infringing Apple Watches, infringing Apple Watches have already been broadly sold in the United States such that there are already a large number of potential study participants. Neither

[67] Christian M. Dippon, PhD, is an Apple expert witness on the public interest. *See* RBr. at Ex. 5 (Dippon Decl.) at ¶¶ 1.

MASIMO 2003
Apple v. Masimo
IPR2024-00290

Apple nor the non-party commenters have shown that the already large number of infringing Apple Watches in the United States is insufficient for any study. Additionally, as Complainants point out, there is little evidence of formally planned but not yet started studies that are enrolling participants and that require the infringing Apple Watches, as opposed to non-infringing Apple Watches or reasonable alternative devices. *See* CBr. at 77–79; CBr. (Reply) at 31–35. And again, the Commission's remedial orders will have no effect on ongoing research studies that are accepting new participants when those participants use an Apple Watch that they owned prior to the date the Commission's remedial orders becomes final within the meaning of 19 U.S.C. § 1337(j)(4), as discussed in more detail in the following subsection. In sum, the Commission's remedial orders will also have, at most, a minimal adverse effect on formally planned, but not yet started, studies that are enrolling participants.

As for studies that have not yet been formally planned, the Commission finds that any alleged harm related to the public health and welfare is too speculative to rise a public interest concern.

iii. The Service, Repair, and Replacement Exemption

The Commission has determined that its remedial orders shall include a service, repair, and replacement exemption that allows for (1) providing infringing articles specifically for the service, repair, and/or replacement of Apple Watches purchased prior to the expiration of the period of Presidential review (*i.e.*, prior to the date the order becomes final within the meaning of 19 U.S.C. § 1337(j)(4)) and issuance of the orders when those imports are to service, repair, and/or replace Apple Watches pursuant to warranty obligations; and (2) providing infringing articles specifically for the service and/or repair of Apple Watches purchased prior to the expiration of the period for Presidential review when those imports are to service and/or repair

MASIMO 2003
Apple v. Masimo
IPR2024-00290

Apple Watches outside of warranty obligations.[68] While the parties' arguments regarding the service, repair, and replacement exemption primarily relate to the United States consumers public interest factor, it is also relevant to the public health and welfare factor as the exemption allows research participants using infringing Apple Watches pursuant to a research study to have that device at least serviced and repaired, and replaced if it is under warranty, such that they may be able to continue the study using the same device they started with. That said, the parties' arguments and our analysis in this section primarily relate to the United States consumers public interest factor, which is discussed more fully below in section V.B.4.d.

a) The Parties' Arguments

Apple's Arguments

Apple argues that "[a]ny remedial order should protect consumers who have permissibly obtained an Apple Watch with the accused Blood Oxygen feature by permitting Apple to provide technical support, service, repair, and replacement services, both with respect to units under warranty or other applicable service and repair obligations, and to units no longer under warranty." RBr. at 74 (citing, *inter alia*, *Fitness Devices*, Inv. No. 337-TA-1265, Comm'n Op. at 88–92). Apple asserts that the "accused Apple Watches are subject to a manufacturer's warranty that requires Apple to repair or replace products for one or two years, depending on the model." *Id.* at 74–75 (citing RBr. at Ex. 4 (Watkins[69] Decl.) at ¶¶ 7–15; RX-0930 at .0003; RX-

[68] As explained *infra* at note 72, Commissioner Kearns does not join the ajority's determination to set the cutoff date for the exemption to the expiration of the period of Presidential review.

[69] Mr. Scott Watkins is an Apple employee. *See* RBr. at Ex. 4 (Watkins Decl.). He is "legal counsel for AppleCare at Apple Inc." *Id.* at ¶ 2.

MASIMO 2003
Apple v. Masimo
IPR2024-00290

0926 at .0002; RX-0929 at .003; RX-0926 at .0003; RX-0927; Tr. (Land[70]) at 968:11–18). Apple explains that, under Apple's warranties, "consumers expect that if Apple replaces their Watch having the Blood Oxygen feature with 'the same model,' the replacement Watch will also include the Blood Oxygen feature." *Id.* at 75 (citing RBr. at Ex. 4 (Watkins Decl.) at ¶ 11). Apple further argues that "[m]any consumers also purchase extended service and support coverage for their Watch devices through Apple's AppleCare+ program." *Id.* (citing RBr. at Ex. 4 (Watkins Decl.) at ¶¶ 16–24; RX-0926 at .0004)). Apple further declares that it "provides out-of-warranty repair and replacement for Watch devices that are beyond the warranty period," for up to five years. *Id.* (citing RBr. at Ex. 4 (Watkins Decl.) at ¶¶ 25–27, 30–33; RX-0927 at .0002–0003; RX-0928C; Tr. (Land) at 968:19–969:1. While Apple's warranties provide a refund option in place of repairing or replacing, Apple asserts that some U.S. states require product manufacturers to make available service parts for repair for five to seven years, regardless of warranty status, and a refund is also not a suitable option for consumers who purchased AppleCare+. *Id.* Apple further points out that "some consumers purchase warranties or insurance contracts through third party vendors, such as mobile device carriers and resellers, [redacted] *Id.* at 77 (citing RBr. at Ex. 4 (Watkins Decl.) at ¶¶ 28–29).

Next, Apple argues that the repair and replacement exemption should cover both repair and replacement to protect consumers. *See* RBr. at 79–80. Apple asserts that the "[manufacturer's suggested retail price] of Apple Watch devices with the accused Blood Oxygen

[70] Brian Land leads a health sensing hardware group at Apple. *See, e.g.*, Final ID at 6.

feature is not insignificant," ranging from $399 to $799, which includes a price range consistent with previous Commission repair and replacement exemptions. *Id.* at 77 (citing, *inter alia*, RBr. at Ex. 4 (Watkins Decl.) at ¶ 21; RX-0333 at .0011; *Certain Robotic Floor Cleaning Devices & Components Thereof*, Inv. No. 337-TA-1252, Comm'n Op. at 77–78 (Apr. 13, 2023)). Apple adds that "[r]equiring Apple to refund the purchase price rather than repair or replace a consumer's Watch could adversely impact consumers who may need a replacement Watch to allow them to continue ongoing monitoring and collection of health, wellness, and fitness data." *Id.* at 78. Apple then declares that [redacted] *Id.* (citing RBr. at Ex. 4 (Watkins Decl.) at ¶¶ 31–33). According to Apple, "[e]xcluding replacement units from an exemption would be contrary to millions of consumers' expectations." *Id.* at 79 (citing RBr. at Ex. 4 (Watkins Decl.) at ¶¶ 6, 15, 24, 27–29, 34; RX-0926; RX-0927; RX-0929; RX-0930).

Apple next argues that the cutoff date for a repair and replacement exemption should be the date that any remedial orders become final within the meaning of 19 U.S.C. § 1337(j)(4), in other words, the end of the period of Presidential review. RBr. at 80 (citing, *inter alia*, *Fitness Devices*, Inv. No. 337-TA-1265, Notice of Comm'n Determination to Reconsider the Original Remedial Orders and to Issue Orders Modifying Those Remedial Orders, 88 Fed. Reg. 30158, at 30158–59 (May 10, 2023)). According to Apple, "[t]his cutoff date protects consumers who—through no fault of their own—purchase an Accused Apple Watch between the date of any remedial order and when it becomes final." *Id.*; *see also id.* at 80–81. Apple asserts that "[a]ny remedy should also include an exemption permitting continued sale of new AppleCare+ service

MASIMO 2003
Apple v. Masimo
IPR2024-00290

and repair plans during and after the Presidential Review Period for any permissibly obtained Apple Watch devices." *Id.* at 81.

Apple further argues that the exemption should apply to any products imported prior to the end of the period of Presidential review, regardless of whether they were purchased by users prior to that cutoff date. RBr. at 81–82. According to Apple, Apple Watches are sold by Apple directly to consumers and also through other retail channels such as retailers who may continue to receive shipments of imported Apple Watch devices up through the Presidential Review Period, subject to the posting of any required bond. *Id.* at 81. Apple declares that "[t]hese retailers, which were not named as respondents and will not be subject to any CDO, may then continue to sell the subject Watch devices," and consumers "purchasing these Watch devices should also be protected by an exemption for repair or replacement" because "[t]hey will have the same legitimate expectation regarding the availability of repairs or replacements as consumers who purchased an article before the cutoff date." *Id.* at 81–82.

Complainants' Arguments

Complainants argue that "Apple presented no evidence of consumer harm that would justify an exemption for repair or replacement of infringing articles or parts." CBr. at 85–86 (citing *Fitness Devices*, Inv. No. 337-TA-1265, Comm'n Op. at 88–92); *see also* CBr. (Reply) at 43 (citing *Wearable Elec. Devices*, Inv. No. 337-TA-1266, Comm'n Op. at 50). Complainants add that the Commission should not allow an exemption for repair or replacement of products under warranty because "Apple's warranties provide an option for a refund, rather than a replacement." CBr. (Reply) at 86 (quoting RX-0925 at .003 at (iii); RX-0929 at .003; RX-0930). Complainants further declare that "[t]here is no evidence in the record that consumers expect

MASIMO 2003
Apple v. Masimo
IPR2024-00290

repair or replacement for products under warranty, and Apple's refund provision gives consumers an alternative option." *Id.*

Complainants further argue that, if the Commission were to provide a service, repair, and replacement exemption, the "cutoff date for any repair and replacement should follow Commission precedent and apply to products sold to an end user before the date of the remedial orders." CBr. at 86 (citing *Fitness Devices*, Inv. No. 337-TA-1265, Comm'n Op. at 88–90). Complainants additionally assert that any "exemption should not apply broadly to all imported products and should be limited to products sold to an end user, because there is no consumer need for repair or replacement of products that have been imported, but not yet sold." *Id.* In arguing that the exemption should not extend through the period of presidential review, Complainants point out that "Apple can inform customers by providing notice of the remedial order." CBr. (Reply) at 43.

b) Analysis

The Commission has concluded that its remedial orders shall include a service, repair, and replacement exemption that allows for (1) providing infringing articles specifically for the service, repair, and/or replacement of Apple Watches purchased prior to the expiration of the period of Presidential review (*i.e.*, prior to the date the order becomes final within the meaning of 19 U.S.C. § 1337(j)(4)) when those imports are to service, repair, and/or replace Apple Watches pursuant to warranty obligations (regardless of whether the warranty was purchased through Apple or a third party vendor); and (2) providing infringing articles specifically for the service and/or repair of Apple Watches purchased prior to the expiration of the period for Presidential review when those imports are to service and/or repair Apple Watches outside of any warranty obligations. *See Wearable Elec. Devices*, Inv. No. 337-TA-1266, Comm'n Op. at 80–81; *Fitness Devices*, Inv. No. 337-TA-1265, Comm'n Op. at 89–92.

MASIMO 2003
Apple v. Masimo
IPR2024-00290

Here, also like in *Wearable Electronic Devices*, the service, repair, and replacement exemption is also justified as to the United States consumers public interest factor based on consumers' reasonable expectations. *See id.* at 80–81; *see also Fitness Devices*, Inv. No. 337-TA-1265, Comm'n Op. at 89–92. Apple Watches are subject to a manufacturer's warranty that requires Apple to repair or replace products for one or two years, depending on the model. RBr. at Ex. 4 (Watkins[71] Decl.) at ¶¶ 7–15; RX-0930 at .0003; RX-0926 at .0002; RX-0929 at .003; RX-0926 at .0003; RX-0927; Tr. (Land) at 968:11–18; *see also Wearable Elec. Devices*, Inv. No. 337-TA-1266, Comm'n Op. at 80–81. Many consumers have also purchased extended service and support coverage (*i.e.*, warranty coverage) for their Apple Watch devices through Apple's AppleCare+ program. RBr. at Ex. 4 (Watkins Decl.) at ¶¶ 16–24; RX-0926 at .0004). And some consumers have purchased warranties or insurance contracts through third party vendors, such as mobile device carriers and resellers, which Apple ultimately supports by [redacted] RBr. at Ex. 4 (Watkins Decl.) at ¶¶ 28–29. Under these warranty programs (such as AppleCare+), consumers expect that, if Apple replaces their device, it will do so with the same model. RBr. at Ex. 4 (Watkins Decl.) at ¶ 11; *see also Wearable Elec. Devices*, Inv. No. 337-TA-1266, Comm'n Op. at 80–81. Moreover, the cost of infringing Apple Watches is not insignificant, ranging from $399 to $799. RBr. at Ex. 4 (Watkins Decl.) at ¶ 21; RX-0333 at .0011. Accordingly, in view of these reasonable consumer expectations, the cost of the infringing Apple Watches, and the Commission's recent decision in *Wearable Electronic Devices*, the Commission has determined to provide a service, repair, and replacement

[71] Mr. Scott Watkins is an Apple employee. *See* RBr. at Ex. 4 (Watkins Decl.). He is "legal counsel for AppleCare at Apple Inc." *Id.* at ¶ 2.

MASIMO 2003
Apple v. Masimo
IPR2024-00290

exemption. *E.g.*, *Wearable Elec. Devices*, Inv. No. 337-TA-1266, Comm'n Op. at 80–81; *Robotic Floor Cleaning Devices*, Inv. No. 337-TA-1252, Comm'n Op. at 77–78.

However, the Commission declines to apply the replacement exemption to devices that are outside of warranty. Replacement for products outside of warranty, in view of the fee required by Apple's policies (*see* RBr. at Ex. 4 (Watkins Decl.) at ¶ 25), is tantamount to allowing consumers to purchase a new infringing article, which is outside of the scope of reasonable consumer expectations. *See Fitness Devices*, Inv. No. 337-TA-1265, Comm'n Op. at 89–92.

Apple additionally requests that the exemption allow Apple to continue to sell "new AppleCare+ service and repair plans during and after the Presidential Review Period for any permissibly obtained Apple Watch devices." RBr. at 81. The Commission declines Apple's request to permit the sale of AppleCare+ service and repair plans beyond the expiration of the period of Presidential review. If customers have not yet purchased the plans as of the expiration of that period, those customers have no reasonable expectation of those benefits, and Apple can simply stop selling those plans for infringing Apple Watches once the period of Presidential review expires. Moreover, customers will still receive the regular Apple warranty, and having the ability to encourage customers to purchase service and repair plans after this timeframe would give Apple a disproportionate benefit.

For their part, Complainants argue that a refund would suffice instead of a repair or replacement. *E.g.*, CBr. (Reply) at 86. However, the Commission has recently considered and rejected that same argument regarding the same warranties in *Wearable Electronic Devices*. *See Wearable Elec. Devices*, Inv. No. 337-TA-1266, Comm'n Op. at 81. Here, like in that investigation, Complainants have failed to show that a refund will be adequate to compensate

MASIMO 2003
Apple v. Masimo
IPR2024-00290

consumers who are seeking to maintain their Apple Watches or to participate in ongoing health-related studies using the Apple Watch. *See id.*

Next, the parties dispute the appropriate cutoff date for the Commission's service, repair, and replacement exemption. *E.g.*, RBr. at 80; CBr. at 86. In order to mitigate the impact of the remedial orders on United States consumers, the Commission has determined that the exemption shall apply to articles purchased prior to the expiration of the period for Presidential review (*i.e.*, prior to the date the order becomes final within the meaning of 19 U.S.C. § 1337(j)(4)). *See Fitness Devices*, Inv. No. 337-TA-1265, Comm'n Notice (May 5, 2023); 88 Fed. Reg. 30158–60 (Notice of a Commission Determination to Reconsider the Original Remedial Orders and to Issue Orders Modifying Those Remedial Orders) (May 10, 2023).[72]

---

[72] Commissioner Kearns does not join the majority in determining to set the cutoff date for the Commission's service, repair, and replacement exemption as the expiration of the period for Presidential review. He would instead use the date the Commission's orders issue. In his view, the Commission's service, repair, and replacement exemption is intended to mitigate the harm to U.S. consumers who—through no fault of their own—would lose access to repair components or replacement devices for articles they purchased at a time when those articles had not been found to have violated section 337. As of the date of the Commission's orders, however, the public is put on notice of a violation that must be remedied, *i.e.* by an exclusion order. He finds that extending the service, repair, and replacement exemption beyond the issuance of the Commission's orders undercuts that remedy to the detriment of the intellectual property holder. Thus, in order to balance the impact of the remedial orders on United States consumers with the public interest in protecting Complainants' intellectual property rights, he would determine that the exemption should only apply to articles purchased prior to the date of the Commission's determination of violation and issuance of the orders. He further notes that this approach is consistent with the Commission's recent approach to this issue. *See, e.g., Certain Variable Speed Wind Turbine Generators & Components Thereof*, Inv. No. 337-TA-1218, Limited Exclusion Order at 2 (Jan. 18, 2022); *Certain Road Milling Machines & Components Thereof*, Inv. No. 337-TA-1067 (Remand), Limited Exclusion Order at ¶ 1 (Nov. 4, 2021); *Microfluidic Devices*, Inv. No. 337-TA-1068, Comm'n Op. (Revised) at 46 (Jan. 10, 2020); *Certain Magnetic Data Storage Tapes & Cartridges Containing the Same*, Inv. No. 337-TA-1012, Limited Exclusion Order at 2 (Mar. 8, 2018). In his view, the majority's approach here, and in *Fitness Devices*, Inv. No. 337-TA-1265, is thus a departure from the Commission's normal practice. *See Fitness Devices*, Notice of Comm'n Determination to Reconsider the

MASIMO 2003
Apple v. Masimo
IPR2024-00290

Apple further requests that the exemption apply to infringing Apple Watches imported prior to the end of the period of Presidential review, but then purchased by customers after the end of the period of Presidential review. *See* RBr. at 81–82. The Commission denies Apple's request for this extension to the exemption. The Commission notes that, after the Presidential review period has expired, if the orders are not disapproved, Apple will not be permitted to sell infringing articles that it imported during the Presidential review period.

Accordingly, as noted above, the Commission's remedial orders include a service, repair, and replacement exemption that allows for (1) providing infringing articles specifically for the service, repair, and/or replacement of Apple Watches purchased prior to the expiration of the period of Presidential review (*i.e.*, prior to the date the order becomes final within the meaning of 19 U.S.C. § 1337(j)(4)) when those imports are to service, repair, and/or replace Apple Watches pursuant to warranty obligations; and (2) providing infringing articles specifically for the service and/or repair of Apple Watches purchased prior to the expiration of the period of Presidential review when those imports are to service and/or repair Apple Watches outside of warranty obligations. This exemption protects reasonable consumer expectations, and also mitigates potential harm to the public health and welfare by allowing research participants using infringing Apple Watches pursuant to a research study to have that device repaired or replaced such that they may be able to continue the study using the same device they started with.

iv. Apple Has Not Shown That a Delay Is Warranted

In brief, the Commission declines Apple's request that enforcement of the Commission's remedy be delayed for twelve months.

Original Remedial Orders and to Issue Orders Modifying Those Remedial Orders, 88 Fed. Reg. 30158, at 30160 n.2 (May 10, 2023) (dissenting views of Commissioner Kearns).

MASIMO 2003
Apple v. Masimo
IPR2024-00290

a) The Parties' Arguments

Apple's Arguments

Apple requests that the Commission delay the enforcement of its remedial order so that manufacturers of the reasonable alternatives to the infringing Apple Watches (discussed above) can ramp up supply of those alternatives such that they can fill any void created by the Commission's exclusion of the infringing Apple Watches. *See, e.g.*, RBr. at 70. According to Apple, "there simply will not be enough supply to fill the massive demand gap that will result from the supply shock of an exclusion order." RBr. at 70. Apple alleges that, in addition to any ordinary difficulty in meeting demand, "the well-documented global semiconductor shortage, after-effects from COVID-19 lockdowns in China, natural disasters (including severe weather events), and delays in procuring integrated circuits and other necessary components" will further complicate matters. *Id.* at 71. Apple further argues that "[t]here is no evidence that supply can be ramped up fast enough to meet anywhere close to the entirety of consumer demand in view of the enormity of the immediate shortfall the exclusion order would create." *Id*. Apple asserts that it will take years to ramp up production to compensate for the exclusion of the Accused Products. *Id.* at 71–72. Thus, Apple requests that the Commission delay the implementation of any remedy for at least twelve months. *E.g.*, *id.* at 71–72, 89.

Complainants' Arguments

For their part, Complainants argue that the Commission should reject "Apple's unsubstantiated arguments regarding the capacity of third-party manufacturers to meet consumer demands." CBr. (Reply) at 39; *see also id.* at 39–41. Complainants further point out that Apple "fails to provide any reason it could not increase production of the Series SE, which contains virtually all the same features as the infringing products, or return to producing the Apple Watch Series 4 or 5, which also included ECG," but not blood oxygen measurements. *Id.* (citing CBr.

MASIMO 2003
Apple v. Masimo
IPR2024-00290

Ex. 93 at ¶¶ 22–24). Regarding Apple's argument related to a potential semiconductor shortage, Complainants allege that Apple overlooks that semiconductors no longer used by Apple will then become available to manufacturers of substitute products. *Id.*

b) Analysis

The Commission declines Apple's request that the Commission's remedy be delayed for twelve months. The Commission has recently considered and rejected Apple's argument in *Wearable Electronic Devices*, Inv. No. 337-TA-1266, Comm'n Op. at 74–75. Moreover, like in *Wearable Electronic Devices*, Apple failed to substantiate its position that manufacturers of suitable alternative products lack the manufacturing capability to ramp up production to meet any demand. *See Wearable Elec. Devices*, Inv. No. 337-TA-1266, Comm'n Op. at 74–75; RBr. at 69–72. Additionally, to the extent any global events have caused any component shortages, *see* RBr. at 71, those events would affect Apple as well as other manufacturers. Accordingly, Apple has not shown any basis for the Commission to delay the effect of its remedy.

v. Conclusion

To mitigate any public health and welfare concerns, the Commission provides within its remedial orders a service, repair, and replacement exemption. *See supra* section V.B.4.a.iii. In view of the provided exemption, the Commission finds that its remedial orders will not raise any public health or welfare concerns that warrant denying Complainants a remedy. There are numerous reasonable substitutes available to users and research participants in the United States, and there is at most scant evidence that the Commission's remedial orders will have any meaningful adverse impact on medical studies in the United States. Furthermore, the public interest of supporting strong intellectual property rights further supports the Commission's conclusion. *E.g.*, *Centerset Faucets*, No. 337-TA-422, Comm'n Op. at 9; *Microfluidic Devices*,

MASIMO 2003
Apple v. Masimo
IPR2024-00290

Inv. No. 337-TA-1068, Comm'n Op. at 45–46. Additionally, Apple has shown no reason for the Commission to delay the imposition of its remedy.

b. Competitive Conditions in the United States Economy

In brief, the Commission finds that the remedial orders in this investigation will not have an adverse impact on competitive conditions in the United States economy.

i. The Parties' Arguments

Apple argues that remedial orders would harm competitive conditions in the United States economy, asserting that the Apple Watch contributes to thousands of jobs across the United States. RBr. at 86; *see also id.* at 86–87. Apple argues that "excluding the Accused Apple Watches would distort market incentives, further harming competitive conditions." *Id.* at 86 (citing RBr. at Ex. 5 (Dippon Decl.) at ¶¶ 22–56). According to Apple, "[r]emoving a product as popular as [the] Apple Watch would lessen competition, and a sudden shortfall of smartwatches would likely yield higher prices, which would impose further harm on US consumer." *Id.* at 87 (citing RBr. at Ex. 5 (Dippon Decl.) at ¶¶ 22–24, 46–55) (internal quotations omitted).

For their part, Complainants argue that their requested remedy would not harm competitive conditions in the United States economy, but instead would benefit those conditions. *See* CBr. at 71–75. Complainants first allege that "major companies offer[ ] substitute smartwatches" and consumers who prefer the Apple ecosystem can still purchase the Apple Watch SE. *See id.* at 72. Complainants add that, in view of the impending remedial orders, Apple has had ample time to release non-infringing versions of its products, and "legitimate design-around efforts should always be encouraged as a path to spur further innovation." *See id.* (quoting *Tivo, Inc. v. EchoStar Corp.*, 646 F.3d 869, 883 (Fed. Cir. 2011) (en banc); *see also id.* at 72–73 (citing, *inter alia*, Alliance for U.S. Startups Stmt., EDIS Doc. ID 791674, at 2

MASIMO 2003
Apple v. Masimo
IPR2024-00290

(asserting that the Commission should not support Apple's "efficient infringement"); Innovation Alliance Stmt., EDIS Doc. ID 791048, at 1 (same)). Complainants additionally assert that issuing their requested remedial orders would encourage companies to "re-shore manufacturing to the United States" and otherwise improve competitive conditions because "America's innovation economy and global competitiveness are dependent on the continued robust enforcement of inventors' intellectual property rights." *Id.* at 73 (quoting Innovation Alliance Stmt., EDIS Doc. ID 791048, at 2). Complainants add that "[h]olding Apple accountable for its 'efficient infringement' would also curtail Apple's exploitation of third parties who rely on the Apple platform." *Id.* Complainants further argue that Apple's violation of intellectual property rights "raises prices, denies consumers choice, lowers quality, and dampens the incentive of sellers of complementary, or competing products to innovate." *Id.* at 74 (quoting CFA Stmt., EDIS Doc. ID 791163, at 3). Complainants allege that allowing the continued importation of infringing Apple Watches will "give Apple an unfair competitive advantage in the narrow market for smartwatches and in the adjacent market for device ecosystems." CBr. at 74 (quoting Dinelli Stmt., EDIS Doc. ID 791686, at 4). As a result, according to Complainants, consumers are "likely to experience long term harm from reduced competition and innovation." *Id.* (quoting Dinelli Stmt., EDIS Doc. ID 791686, at 4).

ii. Non-Party Comments

Non-parties have filed comments stating that issuing remedial orders would have a positive impact on competitive conditions in the United States. *See, e.g.*, Alliance for U.S. Startups Stmt., EDIS Doc. ID 791674, at 2 (asserting that the Commission should not support Apple's "efficient infringement"); Buck Stmt., EDIS Doc. ID 791047 ("As members of Congress, it is our duty to ensure that patent laws are duly enforced, particularly when enforcement is against companies that engage in monopolistic and anti-competitive conduct.

MASIMO 2003
Apple v. Masimo
IPR2024-00290

The American public ultimately bears the cost of the monopolistic behaviors of some of the largest technology firms that, as a business model, work to consolidate market power, stifle innovation, and crush competitors."); Innovation Alliance Stmt., EDIS Doc. ID 791048, at 1 ("Vigorous enforcement and protection of intellectual property rights are essential to the competitive viability of innovative companies within the United States."); CFA Stmt., EDIS Doc. ID 791163, at 3; Dinelli Stmt., EDIS Doc. ID 791686, at 4; US Inventor Stmt., EDIS Doc. ID 791041 ("A healthy and thriving innovation ecosystem in the United States is in the public interest.").

iii. Analysis

The Commission finds, consistent with its holding in *Wearable Electronic Devices*, that its remedial orders in this investigation will not have any adverse impact on competitive conditions in the United States economy. *See Wearable Elec. Devices*, Inv. No. 337-TA-1266, Comm'n Op. at 79–80. As was the case in that investigation, here there are also numerous suitable alternatives to the excluded Apple Watches (as discussed above in relation to the public health and welfare public interest factor and below as to the United States consumers public interest factor).

Apple argues that the remedial orders will harm competitive conditions by jeopardizing United States jobs. *See* RBr. at 86. However, Apple does not specify how many jobs are particularly related to the infringing Apple Watches, as opposed to non-infringing Apple Watches (such as the Apple Watch SE) or researching and developing future non-infringing models, or supporting versions of the Apple Watch earlier than the Apple Watch Series 6), Apple Watch accessories (such as watch bands), or other Apple products beyond the Apple Watch altogether. *See id.* Moreover, Apple does not address whether any lost jobs due to the exclusion of the infringing Apple Watches will be counterbalanced by increased United States jobs for

MASIMO 2003
Apple v. Masimo
IPR2024-00290

manufacturers of reasonable substitutes. Apple further asserts that excluding Apple Watches would "lessen competition" and "likely yield higher prices." *Id.* at 86–87. However, as noted above and below, there is ample competition and not all Apple Watches will be excluded, as at least the Apple Watch SE would not be subject to exclusion. Thus, the Commission finds that the remedial orders in this investigation will not have any adverse impact on competitive conditions in the United States economy.

c. The Production of Like or Directly Competitive Articles in the United States

The Commission finds that its remedial orders in this investigation will not have any adverse impact on the production of like or directly competitive articles in the United States.

i. The Parties' Arguments

Apple does not contest that it does not manufacture any products in the United States. *See generally* RBr.; RBr. (Reply). Instead, Apple argues:

> The competitive harms will not be offset by substantial "production of like or directly competitive articles," 19 U.S.C. § 1337(d)(1), because Apple's primary smartwatch competitors, for example, do not manufacture their products in the United States. And while the Masimo W1 is manufactured in the United States, it is not a reasonable substitute.

RBr. at 73. Apple explains that, "[a]lthough Complainants claim that the Masimo W1 is made in the U.S., the W1 is not a smartwatch and not a reasonable substitute for smartwatch consumers who want the Accused Apple Watches." RBr. (Reply) at 44. Apple adds that, regardless, "Complainants have not described how many [W1 Watch] units are manufactured in the U.S. or how many more units it would expect to manufacture in the U.S (as opposed to its [redacted]). " *Id.* Thus, according to Apple, "no evidence exists that an exclusion order would have any meaningful impact on U.S. production." *Id.*

MASIMO 2003
Apple v. Masimo
IPR2024-00290

Complainants point out that neither the Apple Watches nor any smartwatches made by Samsung, Fitbit, or Garmin are produced in the United States, but that Masimo produces its W1 Watch in the United States and [redacted] *Id.* (citing CBr. at Ex. 53 (Muhsin Decl.) at ¶ 5). Thus, according to Complainants, "the only impact an exclusion order would have on like or directly competitive articles made in the United States is that Masimo likely will be able to continue to build its domestic industry in its intellectual property because of the increased competition in the market caused by exclusion of Apple's infringing products." *Id.*

ii. Analysis

The Commission finds that the "production of like or directly competitive products in the United States" public interest factor does not weigh against the Commission's remedy in this investigation. As the parties appear to agree, neither the Apple Watch nor smartwatches made by Samsung, Fitbit, or Garmin are produced in the United States. *See* CBr. at 75; RBr. at 73. Moreover, there is no evidence suggesting that any reasonable substitute for excluded Apple Watches, aside from Masimo's W1 Watch or Freedom Watch, [redacted] *See, e.g.*, CBr. at 75; RPHBr. at 251–52 (disputing only the extent that Masimo's domestic facilities are used for production of the W1 Watch); RBr. (Reply) at 45 (asserting only that Complainants did not identify how many units it has produced or plans to produce in the United States).

And as for the W1 Watch and Freedom Watch, Complainants do not provide quantitative evidence regarding the extent of any United States production of these watches or the extent that potential customers would choose Masimo's W1 Watch or Freedom Watch as a substitute for excluded Apple Watches. Therefore, the Commission cannot assess the extent to which Complainants' requested remedial orders would result in increased domestic production of

MASIMO 2003
Apple v. Masimo
IPR2024-00290

suitable substitutes to the excluded Apple Watches. However, based on the absence of domestic production of excluded products, the remedial orders in this investigation will not have an adverse impact on the production of like or directly competitive articles.

d. United States Consumers

In brief, in view of the exemption for service, repair, and replacement (discussed above), any effect of the Commission's remedial orders on United States consumers does not rise to the level of a public interest concern.

i. The Parties' Arguments

Apple argues, that "[b]eyond the potential effects on the health of U.S. consumers, an exclusion order would further harm those consumers by impeding access to the valuable, tightly integrated suite of features that drive demand for these devices." RBr. at 85. According to Apple, "[m]illions of Americans rely on [the] Apple Watch to stay connected, and in addition to the Blood Oxygen feature at the heart of this Investigation and the health features described above, [the] Apple Watch also contains a complement of features consumers enjoy—including productivity, payment, navigation, safety, and accessibility functions." *Id.* Apple then declares that "[a]n exclusion order would take those features out of the hands of American consumers." *Id.* at 86.

For their part, Complainants argue that their requested remedy would benefit United States consumers by removing Apple's alleged poor-performing blood oxygen feature from the marketplace while not interfering with their access to non-infringing Apple Watches. *See* CBr. at 75. Complainants further argue that consumers would benefit "in the long run by encouraging investment in the next generation of healthcare innovation." *Id.* Complainants additionally urge the Commission to reject any argument that remedial orders should be denied based on the widespread use of the Apple Watch. *Id.* at 75–76 (citing MDMA Stmt., EDIS Doc. ID 791167,

MASIMO 2003
Apple v. Masimo
IPR2024-00290

at 4 (declaring that "[t]hat would be tantamount to arguing if you can infringe in a huge way, then you should escape the consequences"); C4IP Stmt., EDIS Doc. ID 791567, at 3–4 (similar)). Complainants then assert that "many consumers desire to have an Apple Watch only because of the benefits of having multiple devices within Apple's device ecosystem," and "[c]onsumers would benefit by expanding their choices to other device makers and those that choose to continue using Apple devices still would be able to select non-infringing Apple Watches like the SE." *Id.* at 76 (citing Dinielli Stmt., EDIS Doc. ID 791686, at 3).

ii. Non-Party Comments

Non-parties filed submissions commenting on the United States consumers public interest factors both in support of Complainants and Apple. *See, e.g.*, Dinelli Stmt., EDIS Doc. ID 791686, at 4 (declaring that allowing Apple to import infringing Apple Watches would give Apple an unfair competitive advantage and will likely cause United States consumers "long term harm from reduced competition and innovation"); Saxon Comments, EDIS Doc. ID 797811 (asserting that consumers benefit from having "more accurate tools, not fewer . . . to help identify cardiac ailments").

iii. Analysis

In view of the exemption for service, repair, and replacement (discussed above), any effect of the Commission's remedial orders on United States consumers does not rise to the level of a public interest concern.

First, there are numerous reasonable substitutes for the infringing Apple Watches available to United States consumers. Looking beyond the public health and wellness aspects of the Apple Watch (as those are considered separately in the public health and welfare public interest factor, discussed above in section V.B.4.a.), the scope of reasonable substitutes includes general purpose smartwatches. *See Fitness Devices*, Inv. No. 337-TA-1265, Comm'n Op., at 85

MASIMO 2003
Apple v. Masimo
IPR2024-00290

("The correct assessment . . . for 'reasonable substitutes for the devices subject to the exclusion order,' [is] not whether 'every consumer cannot obtain the exact device desired.'" (quoting *Elec. Digital Media Devices*, Inv. No. 337-TA-796, Comm. Op. at 120) (citing *Table Saws*, Inv. No. 337-TA-965, Comm'n Op. at 9)). Thus, United States consumers have as reasonable substitutes at least the Apple Watch SE, the Samsung Galaxy Watch, and the Google Pixel Watch. Second, to reduce the impact of the remedial orders on United States consumers, the Commission has provided a service, repair, and replacement exemption. *See supra* section V.B.4.a.iii. Accordingly, any impact of the Commission's remedial orders on United States consumers will not rise to the level of a public interest concern.

5. Conclusion

In accordance with its statutory duty, the Commission has considered the effect of its remedial orders "upon the public health and welfare, competitive conditions in the United States economy, the production of like or directly competitive articles in the United States, and United States consumers, [and whether] it finds that such articles should not be excluded from entry." 19 U.S.C. §§ 1337(d)(l), (f)(1). To prevent any harm from the remedial orders to the public health and welfare and to United States consumers, the Commission's LEO and CDO each include an exemption for service, repair, and replacement. *See supra* section V.B.4.a.iii. As in *Wearable Electronic Devices*, this exemption mitigates potential harm to the public health and welfare by allowing research participants using infringing Apple Watches pursuant to a research study to have that device serviced and repaired or have it replaced, if it is under warranty, such that they may be able to continue the study using the same device they started with. *See Wearable Elec. Devices*, Inv. No. 337-TA-1266, Comm'n Op. at 70–71, 80–81. Additionally, Apple has not shown any reason why the Commission should delay the enforcement of its remedy.

MASIMO 2003
Apple v. Masimo
IPR2024-00290

C. Bonding

As discussed below, the Commission has determined that the bond during the period of Presidential review shall be in the amount of zero percent (0%, *i.e.*, no bond) of the entered value of the articles subject to the LEO.

1. The Applicable Law

If the Commission enters an exclusion order or a CDO, a respondent may continue to import and sell its products during the 60-day period of Presidential review under a bond in an amount determined by the Commission to be "sufficient to protect the complainant from any injury." 19 U.S.C. § 1337(j)(3); *see also* 19 C.F.R. § 210.50(a)(3). When reliable price information is available in the record, the Commission has often set the bond in an amount that would eliminate the price differential between the domestic product and the imported, infringing product. *See Certain Microsphere Adhesives, Processes for Making Same, & Prods. Containing Same, Including Self-stick Repositionable Notes*, Inv. No. 337-TA-366, USITC Pub. No. 2949, Comm'n Op. at 24 (Jan. 16, 1996). The Commission also has used a reasonable royalty rate to set the bond amount where a reasonable royalty rate could be ascertained from the evidence in the record. *See, e.g., Certain Audio Digital-to-Analog Converters & Prods. Containing Same*, Inv. No. 337-TA-499, Comm'n Op. at 25 (Mar. 3, 2005). Where the record establishes that the calculation of a price differential is impractical or there is insufficient evidence in the record to determine a reasonable royalty, the Commission has imposed a one hundred percent (100%) bond. *See, e.g.*, *Certain Liquid Crystal Display Modules, Prods. Containing Same, & Methods Using the Same*, Inv. No. 337-TA-634, Comm'n Op. at 6–7 (Nov. 24, 2009). The complainant, however, bears the burden of establishing the need for a bond. *Certain Rubber Antidegradants, Components Thereof & Prods. Containing Same*, Inv. No. 337-TA-533, USITC Pub. No. 3975, Comm'n Op. at 40 (July 21, 2006).

MASIMO 2003
Apple v. Masimo
IPR2024-00290

2. The RD

Before the ALJ, Complainants sought a bond in the amount of 100 percent of the entered value of the Accused Products because the accused Apple Watch products are allegedly "harming the public's perception of pulse oximetry." RD at 5 (quoting CPHBr. at 312 and citing CPHBr. (Reply) at 182–83). For its part, Apple argued that a zero percent bond is appropriate because Complainants have not identified any domestic industry products that compete with the Accused Products. *Id.* (citing RPHBr. at 280). Apple further argued that Complainants' theory of harm to public perception is unsubstantiated and is, in any event, not an appropriate basis for requiring a bond. *Id.* (citing RPHBr. at 280–81; RPHBr. (Reply) at 175–76).

The RD found that Complainants did not meet their burden of establishing the need for a bond. RD at 6. The RD pointed out that Complainants did not argue that a bond is needed to protect any of its own competing products during the period of Presidential review. *Id.* (citing CPHBr. at 312). The RD further pointed out that Complainants did not present any evidence or argument regarding (1) the pricing (or expected pricing) of any such competing product; (2) the possibility (or impossibility) of performing a price differential analysis based on any such pricing; or (3) any reasonable royalty analysis. *Id.* at 6 n.5 (citing CPHBr. at 312; CPHBr. (Reply) at 182–83; *Certain Network Devices, Related Software & Components Thereof (II)*, Inv. No. 337-TA-945, Comm'n Op., 2017 WL 3614521, at *75 ("*Network Devices (II)*"). The RD further observed that, at the time of the hearing, the W1 Watch was not available for sale to consumers on the open market. *Id.* at 6 (citing, *inter alia*, Tr. (Kiani) at 179:17–22). The RD additionally declared that Complainants' alleged harm to the "the public's perception of pulse oximetry" based on the alleged inaccuracy of the Apple Watch's pulse oximetry measurements is not an appropriate basis for setting a bond because the "purpose of bonding is to protect complainants from injury—not to remedy harms to public perception." *Id.* The RD further

MASIMO 2003
Apple v. Masimo
IPR2024-00290

added that "[i]t is not clear from the record that the alleged harm to public perception causes injury to Complainants." *Id.* The RD additionally declared that "Complainants also have identified no clear evidence of current competition between the Apple Watch and Masimo rainbow® sensors." *Id.* at 6 n.7 (citing, *inter alia*, CPHBr. at 312). Thus, the RD found that Complainants have failed to establish the need for a bond. *Id.* at 7.

3. The Parties' Arguments

Before the Commission, Complainants again request that the Commission require bond to "protect Masimo from the detrimental impact of Apple's continued importation of infringing Apple Watches that do not reliably measure oxygen saturation." CBr. at 87 (citing CX-1616, CX-1293, CX-1606). Regarding an alleged competitive injury, Complainants rely on purported concessions by Apple that (1) it, like Complainants, sell "direct-to-consumer devices that measure wellness parameters (including blood oxygen)" and (2) it acknowledged that "Masimo plans to launch a product that competes directly with the Apple Watch later this year." *Id.* (citing Respondent's Motion to Preclude Stephen Jensen from Access to Apple's Confidential Business Information under the Protective Order (Order No. 1), EDIS Doc. ID 750872, at 4, 11 (Sept. 2, 2021)). Complainants additionally assert that they will be injured by a lack of bond because of the "competitive status of the parties," citing a Delaware litigation in which Apple's financial expert described Masimo's "ongoing and escalating sales of W1," "Masimo's serious and long-term intentions to pivot into the smartwatch segment," and Masimo's access to 20,000 points of distribution for the W1. CBr. (Reply) at 50 (citing CBr. (Reply) at Ex. 91 at 33, 36, 37).

For its part, Apple supports the RD's recommendation that bond be set at zero percent. *See* RBr. at 91–92. Apple asserts that "Complainants have not met their burden of establishing the need for a bond," *id.* at 91 (quoting RD at 6), reasoning that Complainants failed to identify

any domestic industry products that "compete with the accused Apple Watch products" and to "present any argument concerning pricing of competing products or reasonable royalty analysis," *id.* (citing RD at 6 & n.5; *Certain Elec. Devices, Including Wireless Comm'n. Devices, Portable Music & Data Processing Devices, and Tablet Computs.*, Inv. No. 337-TA-794, Comm'n Op. at 118–19 (July 5, 2013); *Network Devices (II)*, Inv. No. 337-TA-945, Comm'n Op. at 129–30). Apple further agrees with the RD that the alleged harm to the public perception of pulse oximetry is not a proper basis for justifying bond. *Id.* (citing RD at 6–7). Apple adds that, at the time of the hearing, Complainants did not have a competing product available for sale to consumers in the United States on the open market. *Id.* at 92 (citing RD at 6). Apple further contests that the Apple Watches cause harm to the consumer perception of pulse oximetry. *See* RBr. (Reply) at 47–48. Apple asserts that Complainants' assertion is based on "non-scientific news media articles" and "was addressed at the hearing and thoroughly debunked during the cross-examination of Complainants' economic expert, who conceded that his opinion on 'harm to consumer perception' was not based on testing or technical expert testimony." *Id.* (citing, *inter alia*, CX-1616, CX-1293, CX-1606; Tr. (McGavock[73]) at 552:22–553:14). Apple adds that the "accuracy and reliability of the Blood Oxygen feature on Apple Watch is well documented." *Id.*

4. Analysis

The Commission has determined that the bond during the period of Presidential review shall be in the amount of zero percent (0%, *i.e.*, no bond) of the entered value of the articles

[73] Daniel McGavock is Complainants' expert witness, who was admitted as an expert in financial matters, offering testimony regarding economic domestic industry, bond, and commercial success. *E.g.*, Final ID at 6.

MASIMO 2003
Apple v. Masimo
IPR2024-00290

subject to the LEO. The Commission agrees with the RD that the alleged harm to the public's perception of pulse oximetry is not a cognizable basis for establishing the need for bond and has nevertheless not been substantiated as causing any harm (quantifiable or otherwise) to Complainants. *See* RD at 6. The Commission additionally agrees with the RD that Complainants have not shown any basis for supporting any specific bond based on pricing information or reasonable royalty rates. *See, e.g.*, RD at 5; *Microsphere Adhesives*, Inv. No. 337-TA-366, Comm'n Op. at 24 (basing bond on price differential when such information is available); *Audio Digital-to-Analog Converters*, Inv. No. 337-TA-499, Comm'n Op. at 25 (relying on a reasonable royalty analysis when pricing information was not available). Complainants' vague assertions as to the "competitive status of the parties" (*see* CBr. (Reply) at 50) are insufficient to establish a bond amount sufficient to protect Complainants from any injury during the period of Presidential review. Accordingly, the Commission has determined that the bond during the period of Presidential review shall be in the amount of zero percent (0%, *i.e.*, no bond) of the entered value of the articles subject to the LEO.

VI. CONCLUSION

The Commission has considered all of the other arguments by the parties and does not find them persuasive. Therefore, for the reasons set forth herein, the Commission determines that Complainants have established a violation of section 337 by Apple with respect to claims 22 and 28 of the '502 patent and claims 12, 24, and 30 of the '648 patent, but not with respect to claim 12 of the '501 patent and claims 9 and 27 of the '745 patent. Accordingly, the investigation is terminated with a finding of a violation of section 337. The Commission determines that the appropriate remedy is an LEO and a CDO to Apple; that the public interest does not preclude that remedy; and the bond during the period of Presidential review is set at zero percent (*i.e.*, no bond) of the entered value.

MASIMO 2003
Apple v. Masimo
IPR2024-00290

By order of the Commission.

Lisa R. Barton
Secretary to the Commission

Issued: November 14, 2023

MASIMO 2003
Apple v. Masimo
IPR2024-00290

CERTIFICATE OF SERVICE

I, Lisa R. Barton, hereby certify that the parties listed have entered an appearance in the above captioned investigation, and a copy of the PUBLIC CERTIFICATE OF SERVICE was served upon the following parties via first class mail and air mail where necessary.

Document	Security	Document Type	Official Rec'd Date	Title
808521	Public	Opinion, Commission	11/14/2023 01:10 PM	Commission Opinion

Service Date: November 14, 2023

/s/

Lisa R. Barton
U.S. International Trade Commission
500 E Street, S.W.
Suite 112
Washington, D.C. 20436

MASIMO 2003
Apple v. Masimo
IPR2024-00290

CERTIFICATE OF SERVICE

On behalf of Complainant Cercacor Laboratories, Inc.;Masimo Corporation:

Joseph R. Re, Lead Representative
Knobbe, Martens, Olson & Bear
2040 Main St.
14th Floor
Irvine, California 92614, United States
949-760-0404 -- voice
949-760-9502 -- fax
joe.re@knobbe.com
Electronic Service

On behalf of Respondent Apple Inc.:

Sarah Frazier, Lead Representative
Wilmer Cutler Pickering Hale and Dorr LLP
1875 Pennsylvania Avenue, NW
Washington, District of Columbia 20006, United States
202-663-6000 -- voice
202-663-6383 -- fax
sarah.frazier@wilmerhale.com
Electronic Service

MASIMO 2003
Apple v. Masimo
IPR2024-00290