IN THE UNITED STATES DISTRICT COURT
FOR THE DISTRICT OF DELAWARE

APPLE INC., *Plaintiff*, v. MASIMO CORPORATION and SOUND UNITED, LLC, *Defendants*.	Civil Action No. **JURY TRIAL DEMANDED**

COMPLAINT FOR PATENT INFRINGEMENT

Plaintiff Apple Inc. ("Apple"), for its complaint against Defendants Masimo Corporation ("Masimo") and Sound United, LLC ("Sound United") (together, "Defendants"), alleges as follows:

INTRODUCTION

1. Apple is world-renowned for creating innovative products that people love. Apple produces those innovative products through its significant investment in research and development in technology and product design. Apple's innovations have been recognized with thousands of patents globally.

2. In 2015, Apple released Apple Watch, a revolutionary consumer wearable device. Apple Watch pairs cutting-edge technology with a beautiful design and is made from the highest quality materials. As a result of Apple's investments and advances in consumer wearables, Apple Watch is the best-selling smart watch of all time. Apple protects these investments and advances through its intellectual property (IP) rights, including patents.

3. Masimo is a hospital equipment manufacturer that has never been in the consumer wearables business.[1] But recently, Masimo released its first watch, direct to consumers, called the Masimo W1. Rather than innovating and developing a product independently, Masimo copied Apple while filing lawsuits to try to prevent sales of Apple Watch.

Apple Watch	Masimo W1

4. Masimo's copying violates Apple's patent rights. Apple brings this action to stop Masimo's infringement.

[1] *See* Company Evolution: About Masimo, MASIMO CORP., https://www.masimo.com/company/masimo/evolution/ (last visited Oct. 13, 2022).

THE PARTIES

5. Plaintiff Apple is a California corporation with its principal place of business at One Apple Park Way, Cupertino, California 95014.

6. Defendant Masimo is a Delaware corporation with its principal place of business at 52 Discovery, Irvine, California 92618. Masimo has appointed the Corporation Service Company, 251 Little Falls Drive, Wilmington, Delaware 19808 as its registered agent for service of process.

7. Defendant Sound United is a Delaware limited liability company with its principal place of business at 5541 Fermi Court, Carlsbad, CA 92008. On information and belief, Sound United is a wholly owned subsidiary of Masimo. Sound United has appointed the Corporation Service Company, 251 Little Falls Drive, Wilmington, Delaware 19808 as its registered agent for service of process.

8. Joinder of Masimo and Sound United in this action and consolidation for trial is appropriate under 35 U.S.C. § 299. Apple asserts claims for relief jointly, severally, or in the alternative against Masimo and its wholly owned subsidiary Sound United arising from the making, using, importing into the United States, offering for sale, and/or selling of the same infringing product, the W1. Common questions of fact will arise in this action relating to Defendants' infringement and liability.

JURISDICTION AND VENUE

9. This Court has subject-matter jurisdiction under 28 U.S.C. §§ 1331 and 1338(a) because this action arises under the patent laws of the United States, 35 U.S.C. §§ 100 *et seq.*

10. This Court has personal jurisdiction over Defendants because Defendants are entities each organized and existing under the laws of the State of Delaware.

11. Venue is proper in this Court under 28 U.S.C. § 1400(b) because Defendants are entities each organized and existing under the laws of the State of Delaware, and therefore each resides in the District of Delaware.

BACKGROUND

12. Apple was founded in 1976. Since then, Apple has made countless significant contributions in a variety of fields, including computers, software, telecommunications, integrated circuits, user interfaces, and industrial design. Apple's successful products include not only wearables, but also smartphones, tablets, desktop and laptop computers, operating systems, music products, professional-grade audio and video production software, semiconductor chips, and more. The United States Patent and Trademark Office ("USPTO") has awarded thousands of patents to Apple for its contributions to science and the useful arts. Apple's patents include U.S. Patent Nos. D735,131; D883,279; D947,842; and D962,936 (the "Patents-in-Suit").

13. Defendants' accused products are one or more products that infringe the Patents-in-Suit, including the Masimo W1 device ("Device") and its charger ("Wireless Charger") (together, "W1").[2]

I. APPLE REVOLUTIONIZES WEARABLE TECHNOLOGY AND DESIGN

14. Apple released the first-generation Apple Watch in April 2015, and it quickly became the best-selling smart watch. Since then, new line ups of Apple Watch have been released with powerful new technology. In September 2022, Apple announced the newest generation of Apple Watch products, including Apple Watch Series 8, the latest Apple Watch SE, and the all-new Apple Watch Ultra.

[2] Masimo W1 User's Guide at 7, *available at* https://www.masimopersonalhealth.com/pages/masimo-w1-support (last visited Oct. 13, 2022).

15. Apple Watch integrates seamlessly with popular Apple products such as the iPhone and expands their capabilities. It allows wearers to conveniently and intuitively access many of their favorite features. For example, users can receive and respond to notifications from their iPhone, place and answer phone calls, listen to music, download apps, and access features such as Apple Maps and Siri—all on a device conveniently located on the wearer's wrist. Apple Watch also uses this position on the wearer's wrist to introduce new capabilities, such as advanced fitness tracking and health metrics including heart health, sleep, women's health, and mobility. And features like Fall Detection, Crash Detection, and Emergency SOS can also help users call for help in the moment they need it. These features and others work in tandem with apps on the wearer's iPhone.

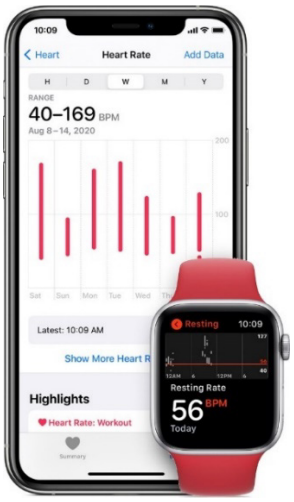

Health App and Apple Watch

16. Every Apple Watch includes a biosensor module on the back that rests on the wearer's wrist. The biosensor module contains LEDs, photodiodes, electrodes, and other components to enable measurement of health and wellness metrics such as heart rate, blood oxygen, and even electrocardiogram (ECG). The technology that enables these features is paired with a unique, eye-pleasing design and made of high-quality materials. Apple has updated the biosensor module and its design several times.

L to R: Apple Watch (first generation), Apple Watch Series 4, and Apple Watch Series 7

Apple Watch Ultra (2022)

17. Apple Watch also contains a receive coil that inductively couples to a transmit coil in the charging "puck" to wirelessly charge Apple Watch's battery. The puck contains an internal permanent magnet that enables the user to connect and disconnect Apple Watch from its charger easily and effortlessly. Implementing wireless charging allowed Apple to greatly simplify not only the charging process, but also reduce its footprint.

Apple Watch Magnetic Charging Cable

Charging an Apple Watch

18. Apple has patented these and other ornamental designs.

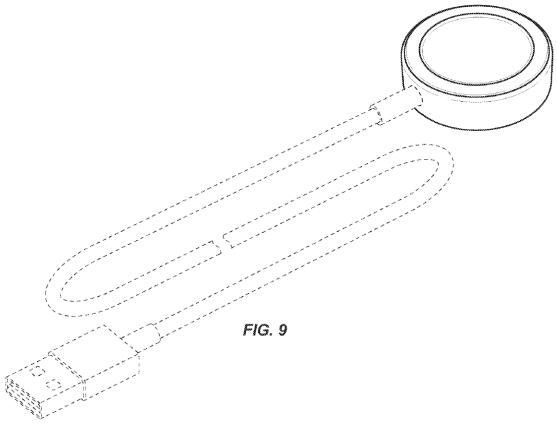

U.S. Patent No. D735,131
Figure 9

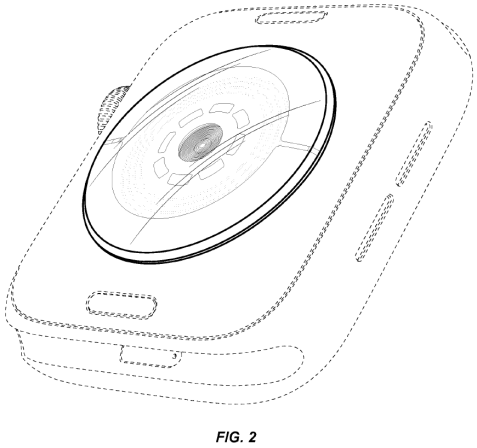

U.S. Patent No. D883,279
Figure 2

19. The success of Apple's products is attributable not only to Apple's technological innovations, but also to Apple's careful attention to industrial design. Apple Watch is no exception. Apple's products, including Apple Watch, are meticulously designed to be eye-pleasing. Aesthetic themes and cues run through all of Apple's products, from the iPhone to Apple Watch.

20. Apple's products use the highest quality materials, such as high-grade aluminum, composites, ceramics, glass, and sapphire. Apple offers Apple Watch in several finishes and offers a variety of bands, straps, and loops to suit each wearer's preference. Apple also offers Apple Watch in collaboration with high-profile brands such as Hermès and Nike. Apple Watch's aesthetic appeal to a wide variety of consumer tastes is important to the product's success.

Apple Watch Nike

Apple Watch Hermès

Apple Watch Bands

II. MASIMO TAKES UNFAIR SHORTCUTS FOR ITS WATCH

21. Since its founding in 1989, Masimo has been a hospital equipment company.[3] Until recently, Masimo never disclosed an intent to offer consumer wearables to the general public.[4] In fact, as detailed below, Masimo had never even disclosed its intent to sell a consumer wearable until after it began its litigation campaign against Apple targeting Apple Watch—which came many years after Apple Watch revolutionized the consumer watch market.

---

[3] *See* Company Evolution: About Masimo, MASIMO CORP., https://www.masimo.com/company/masimo/evolution/ (last visited Oct. 13, 2022).
[4] *Id.*

22. Teams across Apple worked for years to develop Apple Watch into a successful, innovative, and appealing product. In contrast, Masimo copied from Apple Watch and is free-riding on Apple's hard work. Rather than develop its own innovations to make its W1 attractive to consumers, Masimo copied Apple Watch and brought carefully timed lawsuits to try to kick Apple out of the market while Masimo and its recently acquired consumer division, Sound United, launched the W1.

23. Masimo is and has always been a hospital equipment company. Its product offerings are primarily directed at medical professionals for use in hospitals or other caregiving settings, such as the following products:

Masimo Radical
(2000)

Masimo Rad-9
(2006)

Masimo Rad-87
(2008)

Radical-7
(2011)

Root
(2014)

Rad-97
(2017)

24. In fact, the entire "Company Evolution" on Masimo's website is devoted to showcasing hospital products, and not consumer wearables.[5] Masimo portrays its 33-year history as devoted to hospital products and the patient sensors that go with those products.[6]

25. Masimo's business revolves around selling hospital products that use disposable biometric sensors, and the subsequent sale of additional disposable sensors.[7] For this reason, Masimo touts its "installed base" of hospital equipment in its annual reports.[8] Masimo derives the majority of its revenue from, and is "highly dependent" on, its Masimo SET platform, Masimo rainbow SET platform and related products, which Masimo describes as its "primary product offerings."[9]

26. For years, Masimo's focus was clinical-grade pulse oximetry. Following years of litigation, Masimo received a steady stream of patent licensing revenue from Nellcor (Medtronic),

---

[5] Company Evolution: About Masimo, MASIMO CORP., https://www.masimo.com/company/masimo/evolution/ (last visited Oct. 13, 2022).

[6] *Id.*

[7] *See, e.g.*, Masimo (MASI) Q3 2021 Earnings Call Transcript, MOTLEY FOOL TRANSCRIBING (Oct. 27, 2021), https://www.fool.com/earnings/call-transcripts/2021/10/27/masimo-masi-q3-2021-earnings-call-transcript/ ("The year-over-year improvement was primarily driven by a more favorable revenue mix as we delivered strong revenue performance from our higher margin sensors in combination with the anticipated decline in sales for our lower margin technology boards and instruments."); Kenneth Squire, *How Activist Politan Capital May Find An Opportunity to Trim Costs, Build Value at Masimo*, CNBC (Aug 20, 2022), https://www.cnbc.com/2022/08/20/how-activist-politan-capital-may-find-an-opportunity-to-trim-costs-build-value-at-masimo.html. ("This is a razor/razor blade business model with the devices using single-use sensors pursuant to five-year contracts resulting in 80% recurring revenue for Masimo.").

[8] *E.g.*, Masimo Corporation, *2016 Annual Report* at 7, *available at* https://investor.masimo.com/financials/annual-reports/default.aspx (last visited Oct. 13, 2022).

[9] Masimo Corporation, *Fiscal Year 2021 Form 10-K Annual Report*, at 38, *available at* https://investor.masimo.com/financials/sec-filings/sec-filings-details/default.aspx?FilingId=15576856 (last visited Oct. 13, 2022) [hereinafter "Masimo F.Y. 2021 10-K"].

its only major competitor, and other companies.[10] But around 2019, Masimo's patents and license agreements began to expire, and the royalty revenue dried up.[11]

	Year Ended January 2, 2021	Year Ended December 28, 2019	Year Ended December 29, 2018	Year Ended December 30, 2017[(1)]	Year Ended December 31, 2016[(1)]
	(in thousands, except per share amounts)				
Statement of Operations:					
Revenue:					
Product	$ 1,143,744	$ 936,408	$ 829,874	$ 738,242	$ 673,962
Royalty and other revenue	—	1,429	28,415	52,006	38,936
Total revenue	1,143,744	937,837	858,289	790,248	712,898

27. As Masimo told investors in its most recent Form 10-K, "[c]ertain of our patents related to our technologies have begun to expire. Upon the expiration of our issued or licensed patents, we generally lose some of our rights to exclude competitors from making, using, selling

[10] *See, e.g.*, *Court Upholds $134.5 Million Verdict Against Nellcor for Infringement of Masimo's Patents*, MASIMO CORP. (July 16, 2004), https://www.masimo.com/company/news/news-media/2004/#news-2f5e00c6-d7af-4d79-92bb-a3345ea49465; *Masimo and Nellcor Announce Settlement of Patent Litigation*, MASIMO CORP. (Jan. 23, 2006), https://www.masimo.com/company/news/news-media/2006#news-76f2c84e-7857-4cff-a364-8a7af3b2221e ($330 million payments and ongoing royalty); *Masimo and Dolphin Announce Settlement of Patent Dispute*, MASIMO CORP. (April 27, 2006), https://www.masimo.com/company/news/news-media/2006#news-ce7f5903-c045-4afa-8c90-4e81ca557fb5; *Masimo and Respironics Announce an Expanded Relationship, the Adoption of Masimo Rainbow SET Pulse CO-Oximetry, and Settlement of Patent Dispute*, MASIMO CORP. (August 1, 2006), https://www.masimo.com/company/news/news-media/2006#news-0cac0538-250f-4c11-b412-217e20006e5e; *Court Upholds Award of $467 Million to Masimo for Philips' Patent Infringement*, MASIMO CORP. (May 19, 2015), https://www.masimo.com/company/news/news-media/2015/#news-3497b147-8519-44ce-8b05-c7c14db3d95d; *Masimo Announces Amendment to Nellcor Royalty Agreement*, MASIMO CORP. (Sept. 2, 2016), https://www.masimo.com/company/news/news-media/2016/#news-0f61fb9f-0af5-4245-b4e2-a329ad0562a6 ("Medtronic will continue to pay Masimo a royalty of 7.75% for its current pulse oximetry products sold in the United States through October 6, 2018. . ."); *Philips and Masimo Sign Multi-Year Business Partnership Agreement in Patient Monitoring and Select Therapy Solutions*, MASIMO CORP. (Nov. 7, 2016), https://www.masimo.com/company/news/news-media/2016/#news-3c555bf2-2e14-4eaa-abc0-5b723675c1e9 ("Agreement ends all pending lawsuits between the two companies and . . . includes a cash payment of USD 300 million by Philips to Masimo.").

[11] Masimo Corporation, *Fiscal Year 2020 Form 10-K Annual Report*, at 66, *available at* https://investor.masimo.com/financials/sec-filings/sec-filings-details/default.aspx?FilingId=14736544 (last visited Oct. 18, 2022) [hereinafter "Masimo F.Y. 2020 10-K"].

or importing products using the technology. . ."[12] For the first time in a long while, Masimo would have to compete without the benefit of patent exclusivity.

28. Around the same time, Masimo noticed that the nature of health technology was changing—driven by innovative companies like Apple—to evince a new focus on consumer health and general well-being.[13] In 2018, Masimo noted to its investors that leading technology companies, including specifically Apple, had expanded into consumer health technology.[14] At the close of its fiscal year 2020—the year Masimo sued Apple in federal court—Masimo again referenced Apple's success in health-oriented wearables in its 10-K and remarked: "If we are unable to successfully compete against them, our financial performance could decline."[15] And in 2021—the year Masimo sued Apple at the ITC—it again referenced Apple, this time specifically highlighting Apple Watch Series 6 and Series 7.[16] It told its investors pointedly: "To effectively compete, we may need to expand our product offerings and distribution channels. . ."[17] Seeing Apple's continued success, Masimo tried to pivot to focus on the consumer to stay competitive. But Masimo, having focused only on clinical settings for decades, had already fallen behind.

29. Masimo had never designed a consumer wearable.[18] Delivering a high-quality product to market from scratch would take years of investment and innovation, but Masimo, already behind the curve, wanted to get there faster. As explained below, Masimo took shortcuts.

---

[12] Masimo F.Y. 2021 10-K at 43.
[13] Masimo F.Y. 2021 10-K at 39.
[14] Masimo Corporation, *Fiscal Year 2018 Form 10-K Annual Report*, at 34, *available at* https://investor.masimo.com/financials/sec-filings/sec-filings-details/default.aspx?FilingId=13255271 (last visited Oct. 18, 2022).
[15] Masimo F.Y. 2020 10-K at 33.
[16] Masimo F.Y. 2021 10-K at 39.
[17] *Id.*
[18] Prior to the W1, Masimo's only consumer products were consumer versions of its fingertip pulse oximeters (iSpO2 and MightySat), which "account for a very, very tiny portion of [Masimo's]

30. In January 2020, Masimo brought a patent lawsuit against Apple targeting Apple Watch.[19] In that case, access to Apple's confidential information and source code for various models of Apple Watch, including details of its construction and functionality, was provided to a board member of Cercacor—a spin-off from Masimo that focuses on research and development.[20] That was two years before Masimo released the W1 to the general public.

31. In June 2021, Masimo filed a complaint before the U.S. International Trade Commission (ITC), an administrative agency, seeking an order that bans Apple Watch from being imported into the United States.[21] According to the public complaint, Masimo's ITC lawsuit claimed that Apple Watch allegedly infringed Masimo patents related to pulse oximetry.[22] But in the months that followed, a more nefarious potential strategy of this lawsuit came to light: to remove Apple Watch from the market and make way for Masimo's own watch.

32. In a Statement of Public Interest—a filing required to bring an ITC lawsuit—Masimo told the ITC that "no public interest concerns exist" with banning importation of Apple Watch. For example, Masimo claimed that the ban would not raise public health, safety, or welfare concerns because "Masimo offers ***pulse oximetry devices*** with reliable ***medical grade***

---

overall business." *MASI – Masimo Corp. at Deutsche Bank Health Care Conference*, THOMSON REUTERS STREETEVENTS (May 8, 2018) (statement of Eli Kammerman, VP of Business Development & Investor Relations at Masimo), Exhibit E.

[19] *Masimo Corp. v. Apple Inc.*, Complaint, D.I. 1, No. 20-cv-48-JVS-JDE (C.D. Cal.).

[20] *See Masimo Corp. v. Apple Inc.*, D.I. 61-1 at 36–49, No. 20-cv-48-JVS-JDE (C.D. Cal.); *see also id.* D.I. 67 ¶ 9.3. Masimo and Cercacor retain a close relationship and have a significant technology cross-license agreement. Masimo's CEO and Chairman Joe Kiani is also the CEO and Chairman of Cercacor. *See* Masimo F.Y. 2021 10-K at 25; *see also* Who We Are, CERCACOR LABORATORIES, *available at* https://www.cercacor.com/pages/about-us-team (last visited Oct. 13, 2022) ("[Masimo CEO] Joe Kiani has ultimate oversight of [Cercacor's] marketing, product development, staffing and other key functions.").

[21] Complaint (Public Version) at ¶ 7, *In the Matter of Certain Light-Based Physiological Measurement Devices and Components Thereof*, Inv. No. 337-TA-1276 (Int'l Trade Comm. Jun. 29, 2021) [hereinafter *ITC Action*].

[22] *Id.* ¶¶ 39–76.

measurements, directly to consumers."[23] Masimo also stated that "[e]ven if smartwatches were necessary for some important public interest function, Apple ***and other third parties*** can provide an adequate supply of alternatives to consumers."[24]

33. In its ITC complaint, Masimo identified an alleged "Masimo Watch" as a "domestic industry" product for four of its patents.[25] On information and belief, no commercial "Masimo Watch" existed at the time Masimo filed its ITC lawsuit in June 2021—rather, it was hastily developed during litigation.[26]

34. Masimo, while trying to block importation or sale of Apple Watch, was also secretly copying it. Masimo hid its copying until the W1 was ready for the public.

35. Masimo unveiled the W1 to the public in January 2022—with the ITC lawsuit ongoing—at a conference in Dubai. At the conference, Masimo executives demonstrated the W1 to attendees and gave interviews to the media.

---

[23] Complainants' Statement on the Public Interest (Public Version) at 2–3, *ITC Action* (Jun. 29, 2021).
[24] *Id*. at 4.
[25] Order No. 32: Granting-in-Part and Denying-in-Part Respondent's Motion to Strike and Preclude Reliance on Complainants' Domestic Industry Contentions (Public Version) at 1–2, *ITC Action* (May 5, 2022).
[26] *See* Order No. 31: Denying Respondent's Motion For Sanctions (Public Version) at 2, *ITC Action* (April 28, 2022) (explaining Masimo "represented that 'a ***confidential sample*** of a Masimo Watch" existed); *id.* at 5-6 ("Complainants oppose the motion for sanctions, arguing that Apple's contentions are premised on an erroneous assumption that the domestic industry requirement requires a ***finished commercial product***."); *id.* at 8 ("[T]he Amended Complaint is equivocal on the issue of whether a domestic industry exists or is in the process of being established.").

Masimo W1 display at Arab Health 2022[27]

36. When the Masimo W1 became public, it was clear that Masimo had copied Apple. As more details emerged, it was clear the scope of that copying was expansive. In addition to copying Apple Watch's overall look and feel, the Masimo W1 copied the patented designs of Apple Watch and its wireless charger. Apple worked hard to develop innovative designs and features for Apple Watch. Masimo took shortcuts.

[27] Arab Health, *Masimo Talks to Arab Health TV (Nazih Darwish)*, YOUTUBE (Jan 24, 2022), https://www.youtube.com/watch?v=5KvcsFkxBvE (last accessed Oct. 13, 2022).

Apple Watch	Masimo W1

37. With the ITC lawsuit against Apple ongoing, Masimo bought Defendant Sound United to bring the W1 to market as quickly as possible. In February 2022, Masimo announced that it would acquire Sound United, "a leading innovator of premium, high-performance audio products for consumers,"[28] for $1.025 billion.[29] Masimo's stated reason for the acquisition, which closed in April 2022, was to "leverage Sound United's expertise across consumer channels to

[28] *Sound United Enters into Agreement to Be Acquired by Masimo Corporation*, SOUND UNITED (Feb. 15, 2022), https://www.soundunited.com/news/sound-united-enters-into-agreement-to-be-acquired-by-masimo-corporation.
[29] William White, *MASI Stock: The Masimo-Sound United Deal That Has Investors Scratching Their Heads*, INVESTORPLACE (Feb. 16, 2022), https://investorplace.com/2022/02/masi-stock-the-masimo-sound-united-deal-that-has-investors-scratching-their-heads/.

accelerate distribution of the combined company's expanding portfolio of consumer-facing healthcare products."[30] The CEO of Masimo stated on an earnings call in February 2022: "We like Sound United the most for several reasons. One, it's [sic] management team. Two, the distribution channel, that is essential to what we are doing as an important product for us which is the Masimo Watch."[31]

38. Masimo's sudden pivot into consumer wearables with a product that copied Apple Watch required consumer distribution channels that Masimo lacked. Masimo's stock fell 35% the day after it announced the Sound United acquisition.[32] Months later, news outlet CNBC reported that an "activist" investor had increased its holdings of Masimo, and CNBC questioned the motivation of Masimo's sudden move into consumer wearables: "But, now Masimo has launched its own W1 watch to compete with Apple. This feels more personal than fiduciary."[33]

39. Masimo released the W1 to the general public on August 31, 2022.[34] As shown below, the Masimo W1 infringes the Patents-in-Suit.

---

[30] *Masimo Closes Acquisition of Sound United*, MASIMO CORP. (April 12, 2022), https://www.masimo.com/company/news/news-media/#4rtyy700d-7c03-9876-bt7u-8y57ktr7ull8n.

[31] Masimo (MASI) Q4 2021 Earnings Call Transcript, MOTLEY FOOL TRANSCRIBING (Feb. 15, 2022), https://www.fool.com/earnings/call-transcripts/2022/02/15/masimo-masi-q4-2021-earnings-call-transcript/.

[32] Ciara Linnane, *Medical Technology Company Masimo Stock Slides 35% After Unveiling $1 Billion Acquisition of Sound United*, MARKETWATCH (Feb. 16, 2022), https://www.marketwatch.com/story/medical-technology-company-masimo-stock-slides-35-after-unveiling-1-billion-acquisition-of-sound-united-2022-02-16; William White, *MASI Stock: The Masimo-Sound United Deal That Has Investors Scratching Their Heads*, INVESTORPLACE (Feb. 16, 2022) https://investorplace.com/2022/02/masi-stock-the-masimo-sound-united-deal-that-has-investors-scratching-their-heads/.

[33] Kenneth Squire, *How Activist Politan Capital May Find An Opportunity to Trim Costs, Build Value at Masimo*, CNBC (Aug 20, 2022), https://www.cnbc.com/2022/08/20/how-activist-politan-capital-may-find-an-opportunity-to-trim-costs-build-value-at-masimo.html.

[34] *Medical Pioneer Masimo Announces the Full Market Consumer Release of the Masimo W1™, the First Watch to Offer Accurate, Continuous Health Data*, MASIMO CORP. (Aug. 31, 2022),

40. Masimo carefully studied Apple's IP for its litigation campaign. Masimo cited numerous Apple Watch patents in its complaints in federal court[35]—well before willfully copying Apple Watch. On information and belief, Masimo either knew about or willfully blinded itself to Apple's patent rights while infringing the Patents-in-Suit.

COUNT I: INFRINGEMENT OF U.S. PATENT NO. D883,279

41. The preceding paragraphs are incorporated by reference as if fully realleged herein.

42. U.S. Patent No. D883,279 (the "D'279 Patent"), entitled "Electronic Device," was duly, legally, and validly issued to inventors Jody Akana et al. on May 5, 2020. The D'279 Patent is assigned to Apple. The D'279 Patent is attached hereto as Exhibit A.

43. Apple is the exclusive and current owner of all rights, title, and interest in the D'279 Patent, including the right to exclude and the right to seek damages and injunctive relief.

44. The D'279 Patent claims the ornamental design for an electronic device as shown and described in its specification and the figures reproduced herein:

https://www.masimo.com/company/news/news-media/#eccc62f2-a423-4e81-a064-57ddc48c8a13.

[35] *See, e.g.*, *Masimo Corp. v. Apple Inc.*, Complaint, D.I. 1, No. 20-cv-48-JVS-JDE (C.D. Cal.).

D'279 Patent
Figures 1–9 (Design Claim)

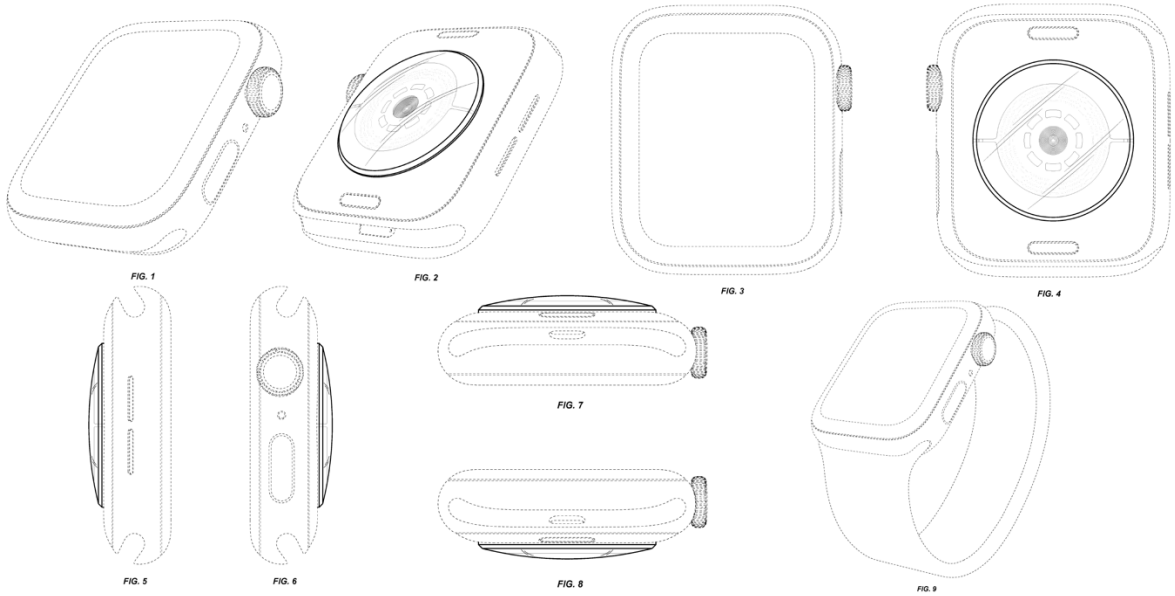

45. Defendants infringe the D'279 Patent by making, using, selling, and/or offering for sale in the United States, and/or importing into the United States, products that embody the design claimed in the D'279 Patent or a colorable imitation thereof, including the Masimo W1. The design embodied in the W1 Device is substantially similar to the design claimed in the D'279 Patent such that it would deceive an ordinary observer. Defendants' infringement is a violation of 35 U.S.C. § 271.

D'279 Patent (Figures 2 and 4)	Masimo W1 (Device)
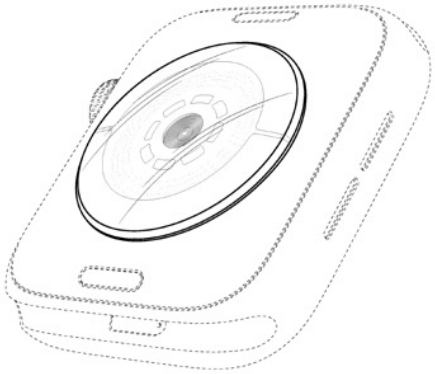 FIG. 2	
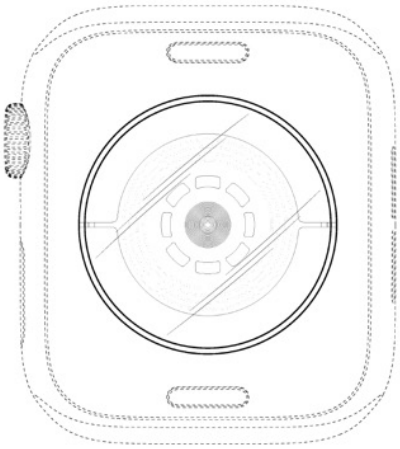 FIG. 4	

46. Defendants' infringement is willful. The design of the W1 product so closely resembles Apple Watch that the only plausible inference is that Defendants copied Apple Watch to develop their own product. On information and belief, Defendants have willfully blinded themselves to Apple's patent rights, including the rights protected by the D'279 Patent.

Apple Watch (Series 4)	Masimo W1 (Device)

47. Apple has been damaged and continues to be damaged by Defendants' infringement of the D'279 Patent. In addition, Apple has suffered and will continue to suffer irreparable harm unless Defendants' infringement of the D'279 Patent is enjoined.

COUNT II: INFRINGEMENT OF U.S. PATENT NO. D947,842

48. The preceding paragraphs are incorporated by reference as if fully realleged herein.

49. U.S. Patent No. D947,842 (the "D'842 Patent"), entitled "Electronic Device," was duly, legally, and validly issued to inventors Jody Akana et al. on April 5, 2022. The D'842 Patent is assigned to Apple. The D'842 Patent is attached hereto as Exhibit B.

50. Apple is the exclusive and current owner of all rights, title, and interest in the D'842 Patent, including the right to exclude and the right to seek damages and injunctive relief.

51. The D'842 Patent claims the ornamental design for an electronic device as shown and described in its specification and the figures reproduced herein:

D'842 Patent
Figures 1–9 (Design Claim)

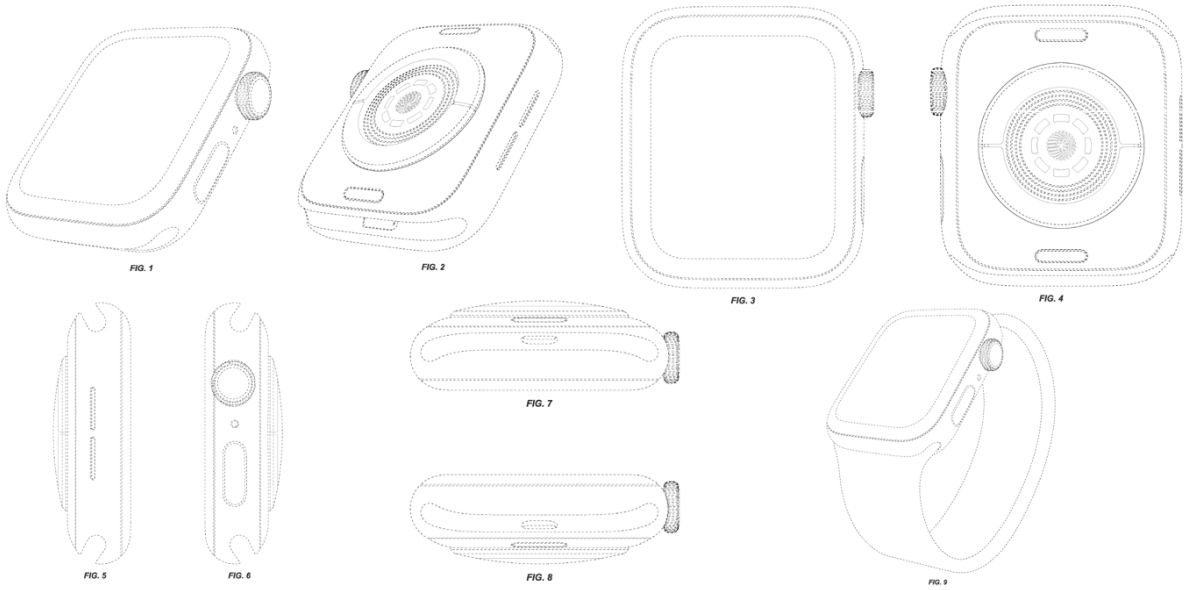

52. Defendants infringe the D'842 Patent by making, using, selling, and/or offering for sale in the United States, and/or importing into the United States, products that embody the design claimed in the D'842 Patent or a colorable imitation thereof, including the Masimo W1. The design embodied in the W1 Device is substantially similar to the design claimed in the D'842 Patent such that it would deceive an ordinary observer. Defendants' infringement is a violation of 35 U.S.C. § 271.

D'842 Patent (Figures 2 and 4)	Masimo W1 (Device)
FIG. 2	
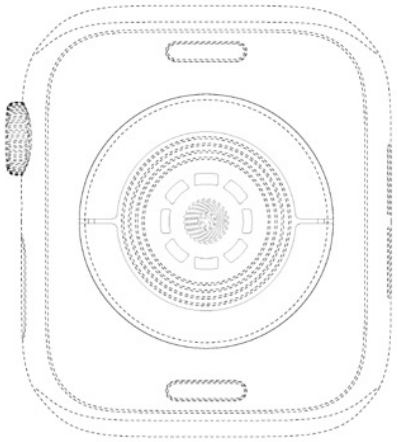 FIG. 4	

53. Defendants' infringement is willful. The design of the W1 so closely resembles Apple Watch that the only plausible inference is that Defendants copied Apple Watch to develop their own product. On information and belief, Defendants have willfully blinded themselves to Apple's patent rights, including the rights protected by the D'842 Patent.

Apple Watch (Series 4)	Masimo W1 (Device)

54. Apple has been damaged and continues to be damaged by Defendants' infringement of the D'842 Patent. In addition, Apple has suffered and will continue to suffer irreparable harm unless Defendants' infringement of the D'842 Patent is enjoined.

COUNT III: INFRINGEMENT OF U.S. PATENT NO. D962,936

55. The preceding paragraphs are incorporated by reference as if fully realleged herein.

56. U.S. Patent No. D962,936 (the "D'936 Patent"), entitled "Electronic Device," was duly, legally, and validly issued to inventors Jody Akana et al. on September 6, 2022. The D'936 Patent is assigned to Apple. The D'936 Patent is attached hereto as Exhibit C.

57. Apple is the exclusive and current owner of all rights, title, and interest in the D'936 Patent, including the right to exclude and the right to seek damages and injunctive relief.

58. The D'936 Patent claims the ornamental design for an electronic device as shown and described in its specification and the figures reproduced herein:

D'936 Patent
Figures 1–9 (Design Claim)

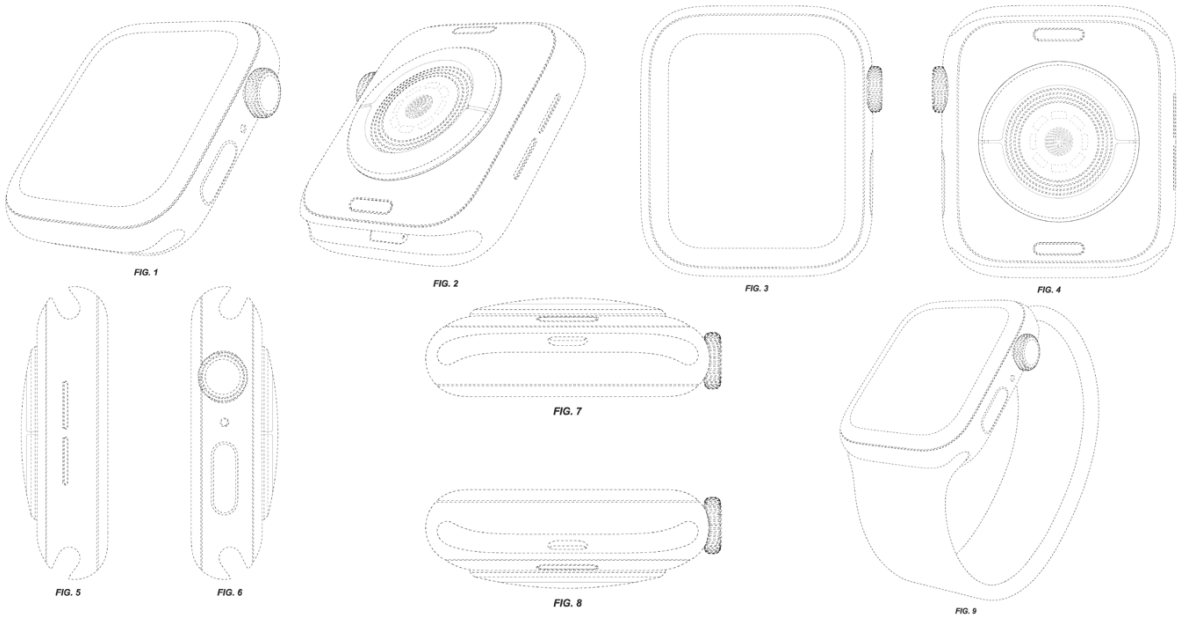

59. Defendants infringe the D'936 Patent by making, using, selling, and/or offering for sale in the United States, and/or importing into the United States, products that embody the design claimed in the D'936 Patent or a colorable imitation thereof, including the Masimo W1. The design embodied in the W1 Device is substantially similar to the design claimed in the D'936 Patent such that it would deceive an ordinary observer. Defendants' infringement is a violation of 35 U.S.C. § 271.

D'936 Patent (Figures 2 and 4)	Masimo W1 (Device)
FIG. 2	
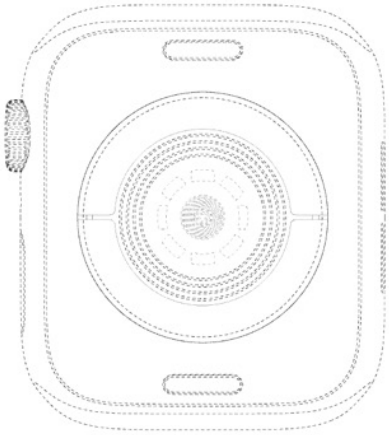 FIG. 4	

60. Defendants' infringement is willful. The design of the W1 so closely resembles Apple Watch that the only plausible inference is that Defendants copied Apple Watch to develop their own product. On information and belief, Defendants have willfully blinded themselves to Apple's patent rights, including the rights protected by the D'936 Patent.

Apple Watch (Series 4)	Masimo W1 (Device)

61. Apple has been damaged and continues to be damaged by Defendants' infringement of the D'936 Patent. In addition, Apple has suffered and will continue to suffer irreparable harm unless Defendants' infringement of the D'936 Patent is enjoined.

COUNT IV: INFRINGEMENT OF U.S. PATENT NO. D735,131

62. The preceding paragraphs are incorporated by reference as if fully realleged herein.

63. U.S. Patent No. D735,131 (the "D'131 Patent"), entitled "Charger," was duly, legally, and validly issued to inventors Jody Akana et al. on July 28, 2015. The D'131 Patent is assigned to Apple. The D'131 Patent is attached hereto as Exhibit D.

64. Apple is the exclusive and current owner of all rights, title, and interest in the D'131 Patent, including the right to exclude and the right to seek damages and injunctive relief.

65. The D'131 Patent claims the ornamental design for a charger as shown and described in its specification and the figures reproduced herein:

D'131 Patent
Figures 1–11 (Design Claim)

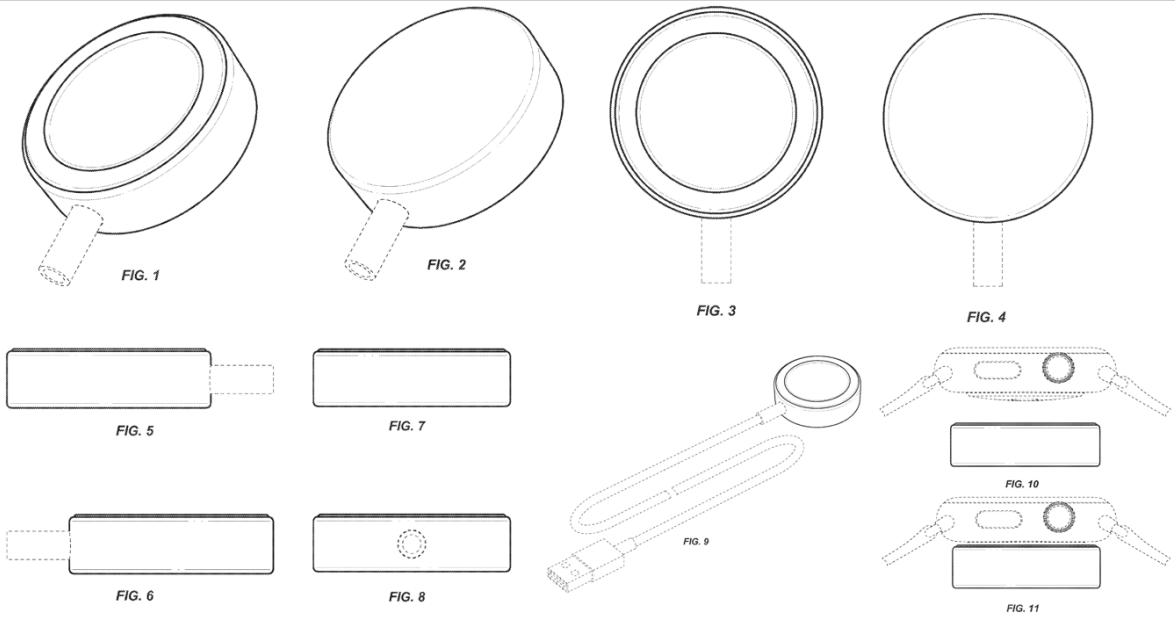

66. Defendants infringe the D'131 Patent by making, using, selling, and/or offering for sale in the United States, and/or importing into the United States, products that embody the design claimed in the D'131 Patent or a colorable imitation thereof, including the Masimo W1. The design embodied in the W1 Wireless Charger is substantially similar to the design claimed in the D'131 Patent such that it would deceive an ordinary observer. Defendants' infringement is a violation of 35 U.S.C. § 271.

D'131 Patent (Figures 1 and 2)	Masimo W1 (Wireless Charger)
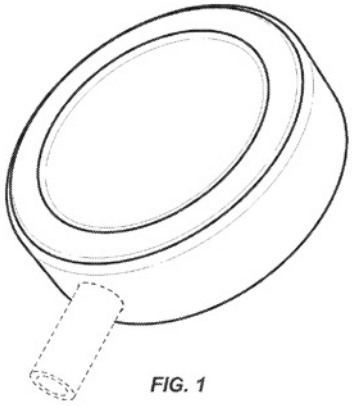 FIG. 1	
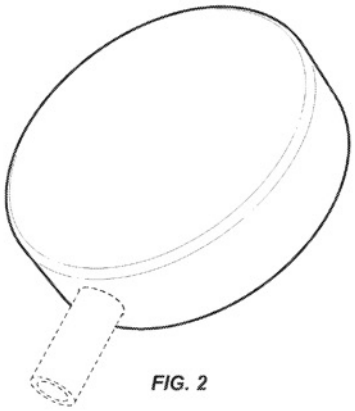 FIG. 2	

67. Defendants' infringement is willful. The design of the W1 Wireless Charger so closely resembles the Apple Watch charger that the only plausible inference is that Defendants copied the Apple Watch charger to develop their own product. On information and belief, Defendants have willfully blinded themselves to Apple's patent rights, including the rights protected by the D'131 Patent.

Apple Watch (Charger)	Masimo W1 (Wireless Charger)

68. Apple has been damaged and continues to be damaged by Defendants' infringement of the D'131 Patent. In addition, Apple has suffered and will continue to suffer irreparable harm unless Defendants' infringement of the D'131 Patent is enjoined.

PRAYER FOR RELIEF

For the foregoing reasons, Apple prays for relief and entry of judgment as follows:

A. That Defendants infringe one or more claims of the Patents-in-Suit;

B. That Defendants' infringement is willful;

C. That Defendants be preliminarily enjoined from further infringement of the Patents-in-Suit pending final disposition of the merits;

D. That Defendants be permanently enjoined from further infringement of the Patents-in-Suit;

E. That Apple be awarded damages for Defendants' infringement of the Patents-in-Suit;

F. That Defendants be disgorged of any wrongfully obtained profits from their infringement of the Patents-in-Suit pursuant to 35 U.S.C. § 289;

G. That Apple be awarded enhanced damages pursuant to 35 U.S.C. § 284, and pre- and post-judgment interest at the maximum rate permitted by law;

H. That this case be declared an exceptional case within the meaning of 35 U.S.C. § 285 and that Apple be awarded attorneys' fees, costs, and expenses incurred in connection with this action; and

I. That Apple be awarded such other relief as this Court deems just and appropriate.

DEMAND FOR JURY TRIAL

Pursuant to Federal Rule of Civil Procedure 38 and the Local Rules of this Court, Apple respectfully demands a jury trial on all issues so triable.

Dated: October 20, 2022

Respectfully submitted,

By: */s/ David E. Moore*

David E. Moore (#3983)
Bindu A. Palapura (#5370)
POTTER ANDERSON & CORROON LLP
Hercules Plaza, 6th Floor
1313 N. Market Street
Wilmington, DE 19801
Tel: (302) 984-6000
dmoore@potteranderson.com
bpalapura@potteranderson.com

Attorneys for Plaintiff Apple Inc.

OF COUNSEL:

John M. Desmarais
DESMARAIS LLP
230 Park Avenue
New York, NY 10169
Telephone: 212-351-3400
jdesmarais@desmaraisllp.com

Peter C. Magic
DESMARAIS LLP
101 California Street
San Francisco, CA 94111
Telephone: 415-573-1900
pmagic@desmaraisllp.com