Trials@uspto.gov
571-272-7822

Paper 15
Entered: January 24, 2023

UNITED STATES PATENT AND TRADEMARK OFFICE

BEFORE THE PATENT TRIAL AND APPEAL BOARD

APPLE INC.,
Petitioner,

v.

MASIMO CORPORATION,
Patent Owner.

IPR2022-01274
Patent 10,912,502 B2

Before JOSIAH C. COCKS, NEIL T. POWELL, and
ROBERT A. POLLOCK *Administrative Patent Judges*.

COCKS, *Administrative Patent Judge*.

DECISION
Denying Institution of *Inter Partes* Review
35 U.S.C. § 314

I. INTRODUCTION

Petitioner Apple Inc. filed a Petition (Paper 3, "Pet.") requesting *inter partes* review of claims 1–30 ("the challenged claims") of U.S. Patent No. 10,912,502 B1 (Ex. 1001, "the '502 patent").[1] Patent Owner Masimo Corporation filed a Preliminary Response (Paper 10, "Prelim. Resp."). We have authority under 35 U.S.C. § 314, which provides that an *inter partes* review may not be instituted unless the information presented in the Petition shows that "there is a reasonable likelihood that the petitioner would prevail with respect to at least 1 of the claims challenged in the petition." 35 U.S.C. § 314(a); *see also* 37 C.F.R § 42.4(a) ("The Board institutes the trial on behalf of the Director.").

Having considered the arguments and evidence presented in the Petition, for the reasons described below, we do not institute *inter partes* review.

A. Related Matters

The parties state that the '502 patent is the subject of *Masimo Corporation, et al. v. Apple Inc.,* ITC Inv No. 337-TA-1276. Pet. 1; Paper 5, 1. Patent Owner also identifies numerous additional patent applications, patents, and *inter partes* review proceedings as related to the '502 patent. Paper 5, 1–3.

[1] Petitioner additionally filed another Petition (IPR2022-01273) that also challenges claims 1–30 of the '502 patent.

MASIMO 2007
Apple v. Masimo
IPR2024-00294

B. The '502 Patent

The '502 patent is titled "User-Worn Device for Noninvasively Measuring a Physiological Parameter of a User." Ex. 1001, code (54). The '502 patent summarizes its disclosure as follows:

> This disclosure describes embodiments of noninvasive methods, devices, and systems for measuring a blood constituent or analyte, such as oxygen, carbon monoxide, methemoglobin, total hemoglobin, glucose, proteins, glucose, lipids, a percentage thereof (e.g., saturation) or for measuring many other physiologically relevant patient characteristics. These characteristics can relate, for example, to pulse rate, hydration, trending information and analysis, and the like.
>
> In an embodiment, the system includes a noninvasive sensor and a patient monitor communicating with the noninvasive sensor. The non-invasive sensor may include different architectures to implement some or all of the disclosed features. In addition, an artisan will recognize that the non-invasive sensor may include or may be coupled to other components, such as a network interface, and the like. Moreover, the patient monitor may include a display device, a network interface communicating with any one or combination of a computer network, a handheld computing device, a mobile phone, the Internet, or the like. In addition, embodiments may include multiple optical sources that emit light at a plurality of wavelengths and that are arranged from the perspective of the light detector(s) as a point source.

Id. at 2:38–60.

The '502 patent describes that "[i]n noninvasive devices and methods, a sensor is often adapted to position a finger proximate the light source and light detector. For example, noninvasive sensors often include a clothespin-shaped housing that includes a contoured bed conforming generally to the shape of a finger." *Id.* at 2:30–34.

MASIMO 2007
Apple v. Masimo
IPR2024-00294

Figure 3C of the ’502 patent is reproduced below:

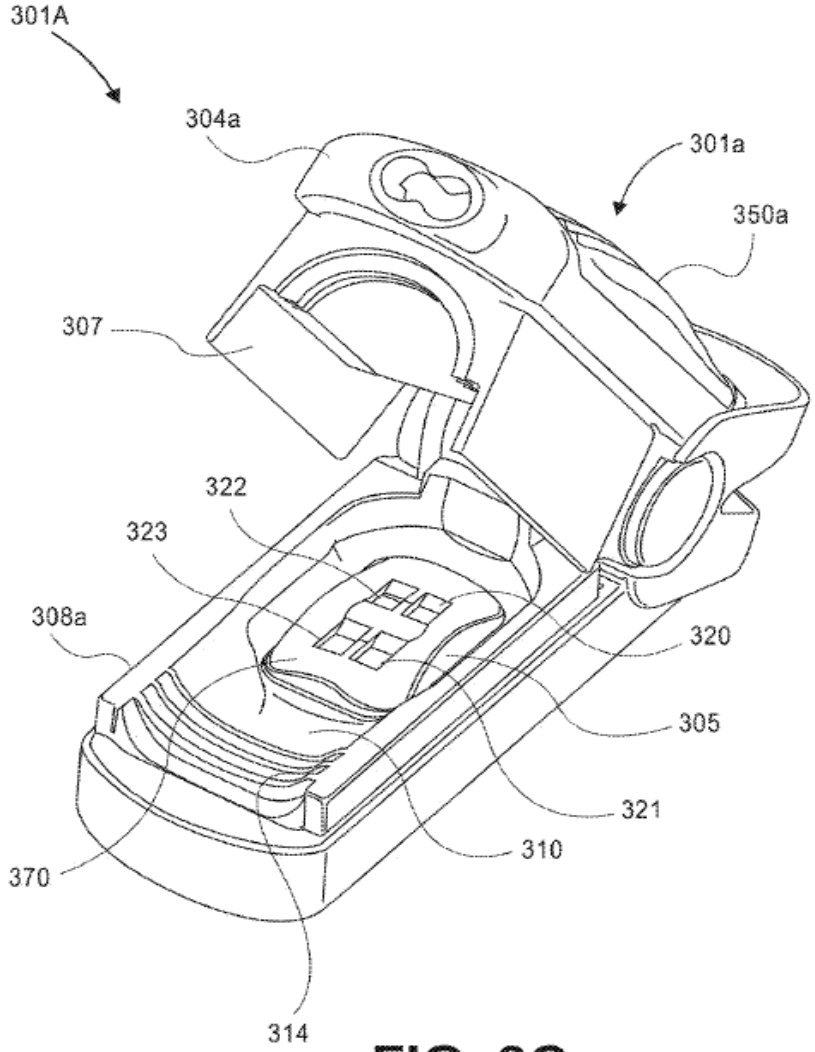

FIG. 3C

Figure 3C above illustrates an example sensor including a finger bed protrusion according to an embodiment of the disclosure. *Id.* at 5:52–55. Sensor 301a includes detector shell 306a (not numbered in Figure 3c) with lower area 308a that can “include absorbing opaque material . . . to reduce ambient light entering the sensor 301a.” *Id.* at 19:4–12. Finger bed 310 includes convex protrusion 305 with openings or windows 320, 321, 322, and 322 that “mirror specific detector placement layouts such that light can impinge through the protrusion 305 onto” photodetectors (not illustrated in

MASIMO 2007
Apple v. Masimo
IPR2024-00294

Figure 3C) that may be positioned beneath the protrusion. *Id.* at 19:42–48; 20:25–34.

C. Challenged Claims

Petitioner challenges claims 1–30 of the ’502 patent. Claims 1, 19, and 28 are independent claims. Claim 1 is representative and is reproduced below:

> 1. A user-worn device configured to non-invasively measure a physiological parameter of a user, the user-worn device comprising:
>
> a first set of light emitting diodes (LEDs), the first set of LEDs comprising at least an LED configured to emit light at a first wavelength and an LED configured to emit light at a second wavelength;
>
> a second set of LEDs spaced apart from the first set of LEDs, the second set of LEDs comprising at least an LED configured to emit light at the first wavelength and an LED configured to emit light at the second wavelength;
>
> four photodiodes arranged on an interior surface of the user-worn device and configured to receive light after attenuation by tissue of the user;
>
> a protrusion comprising:
>
> a convex surface extending over the interior surface, a plurality of openings in the convex surface extending through the protrusion and aligned with the four photodiodes, each opening defined by an opaque surface, and
>
> a plurality of windows, each of the windows extending across a different one of the openings; and
>
> one or more processors configured to receive one or more signals from at least one of the photodiodes and calculate a measurement of the physiological parameter of the user.

Ex. 1001, 44:63–45:23.

MASIMO 2007
Apple v. Masimo
IPR2024-00294

D. Alleged Grounds of Unpatentability

Petitioner asserts the following grounds of unpatentability:

Claims Challenged	35 U.S.C. §	Reference(s)/Basis
1–3, 5–7, 9, 11–18	103	Lumidigm,[2] Scharf,[3] Kotanagi[4]
4, 8, 10, 19–27, 28–30	103	Lumidigm, Scharf, Kotanagi, Tran[5]

Pet. 1. In addition to the references listed above, Petitioner relies on the Declaration of Dr. Thomas W. Kenny (Ex. 1003).

II. ANALYSIS

A. Principles of Law

A petition must show how the construed claims are unpatentable under the statutory grounds it identifies. 37 C.F.R. § 42.104(b)(4). Petitioner bears the burden of demonstrating a reasonable likelihood that it would prevail with respect to at least one challenged claim for a petition to be granted. 35 U.S.C. § 314(a).

A claim is unpatentable under § 103(a) if the differences between the claimed subject matter and the prior art are such that the subject matter, as a whole, would have been obvious at the time the invention was made to a person having ordinary skill in the art to which said subject matter pertains.

---

[2] U.S. Patent No. 7,620,212 B1 issued Nov. 17, 2009 ("Lumidigm," Ex. 1006). Although Jeffrey G. Allen is listed as the first named inventor of the U.S. Patent No. 7,620,212 B2, Lumidigm, Inc. is listed as the Assignee. *See* Ex. 1006, code (73). Like the parties in their briefings in this proceeding, we refer to the noted patent as "Lumidigm."

[3] U.S. Patent No. 6,330,468 B1 issued Dec. 11, 2001 ("Scharf," Ex. 1025).

[4] PCT Application No. WO 2005/092182 A1 published Oct. 6, 2005 ("Kotanagi," Ex. 1007 (English translation)).

[5] U.S. Patent No. 9,820,658 B2 issued Nov. 21, 2017 ("Tran," Ex. 1008).

MASIMO 2007
Apple v. Masimo
IPR2024-00294

KSR Int'l Co. v. Teleflex Inc., 550 U.S. 398, 406 (2007). The question of obviousness is resolved on the basis of underlying factual determinations, including (1) the scope and content of the prior art; (2) any differences between the claimed subject matter and the prior art; (3) the level of skill in the art; and (4) when in evidence, objective indicia of non-obviousness (i.e., secondary considerations). *Graham v. John Deere Co.*, 383 U.S. 1, 17–18 (1966).

"In an [*inter partes* review], the petitioner has the burden from the onset to show with particularity why the patent it challenges is unpatentable." *Harmonic Inc. v. Avid Tech., Inc.*, 815 F.3d 1356, 1363 (Fed. Cir. 2016) (citing 35 U.S.C. § 312(a)(3) (requiring *inter partes* review petitions to identify "with particularity . . . the evidence that supports the grounds for the challenge to each claim")). This burden of persuasion never shifts to Patent Owner. *See Dynamic Drinkware, LLC v. Nat'l Graphics, Inc.*, 800 F.3d 1375, 1378 (Fed. Cir. 2015) (discussing the burden of proof in *inter partes* review).

At this preliminary stage, we determine whether the information presented shows a reasonable likelihood that Petitioner would prevail in establishing that at least one of the challenged claims would have been obvious over the proposed prior art. We analyze the asserted grounds with the above-noted principles in mind.

B. Level of Ordinary Skill in the Art

In determining the level of skill in the art, we consider the type of problems encountered in the art, the prior art solutions to those problems, the rapidity with which innovations are made, the sophistication of the technology, and the educational level of active workers in the field. *Custom*

MASIMO 2007
Apple v. Masimo
IPR2024-00294

Accessories, Inc. v. Jeffrey-Allan Indus. Inc., 807 F.2d 955, 962 (Fed. Cir. 1986); *Orthopedic Equip. Co. v. U.S.*, 702 F.2d 1005, 1011 (Fed. Cir. 1983).

Petitioner contends the following in connection with a person of ordinary skill in the art:

> A person of ordinary skill in the art relating to the subject matter of the '502 Patent as of July 3, 2008 ("POSITA") would have been a person with a working knowledge of physiological monitoring technologies. The person would have had a Bachelor of Science degree in an academic discipline emphasizing the design of electrical, computer, or software technologies, in combination with training or at least one to two years of related work experience with capture and processing of data or information, including but not limited to physiological monitoring technologies. Alternatively, the person could have also had a Master of Science degree in a relevant academic discipline with less than a year of related work experience in the same discipline.

Pet. 2 (citing Ex. 1003 ¶¶ 40–41).

Patent Owner does not dispute this proposed level of skill. Prelim. Resp. 10.

For purposes of this Decision, we adopt Petitioner's proposal as reasonable and consistent with the prior art and the '502 patent. *See Okajima v. Bourdeau*, 261 F.3d 1350, 1355 (Fed. Cir. 2001) (the prior art may reflect an appropriate level of skill in the art).

C. Claim Construction

We construe claims in the same manner used in a civil action under 35 U.S.C. § 282(b) "including construing the claim in accordance with the ordinary and customary meaning of such claim as understood by one of ordinary skill in the art and the prosecution history pertaining to the patent." 37 C.F.R. § 42.100(b). When applying that standard, we interpret the claim

MASIMO 2007
Apple v. Masimo
IPR2024-00294

language as it would have been understood by one of ordinary skill in the art in light of the specification. *Wasica Fin. GmbH v. Cont'l Auto. Sys., Inc.*, 853 F.3d 1272, 1279–80 (Fed. Cir. 2017). Thus, we give claim terms their ordinary and customary meaning as understood by an ordinarily skilled artisan. *See Phillips v. AWH Corp.*, 415 F.3d 1303, 1312–13 (Fed. Cir. 2005) (en banc). Only terms that are in controversy need to be construed, and then only to the extent necessary to resolve the controversy. *Nidec Motor Corp. v. Zhongshan Broad Ocean Motor Co. Matal*, 868 F.3d 1013, 1017 (Fed. Cir. 2017).

Neither party offers any express construction for any claim term. *See* Pet. 4; Prelim. Resp. 9. We determine that all claim terms should be given their ordinary and customary meaning and that it is unnecessary to make that meaning explicit for any term.

D. Grounds Based on Lumidigm, Scharf, and Kotanagi

Petitioner contends that all of the challenged claims (i.e., claims 1–30) are rendered obvious based, in part, on the combined teachings of Lumidigm, Scharf, and Kotanagi.[6] As expressed throughout its Preliminary Response, Patent Owner does not agree.

1. Overview of Lumidigm

Lumidigm is titled "Electro-Optical Sensor." Ex. 1006, code (54). Lumidigm's Abstract is reproduced below:

> Methods and systems are provided that extend the functionality of electro-optical sensors. A device has a multiple light sources, a light detector, and a processor configured to

[6] For claims 3, 4, 6, 9, 10, 20, 21, 23, 24, 26–30, Petitioner additionally relies on Tran.

MASIMO 2007
Apple v. Masimo
IPR2024-00294

> operate the light sources and the light detector to perform distinct functions. At least one of the distinct functions includes a biometric identification function in which light is propagated from the plurality of light sources through presented material. The propagated light is received with the light detector, with the presented material being identified from the received light. Another of the distinct functions includes a nonidentification function performed with the light sources and the light detector.

Id. at code (57).

Lumidigm's Figure 2 is reproduced below:

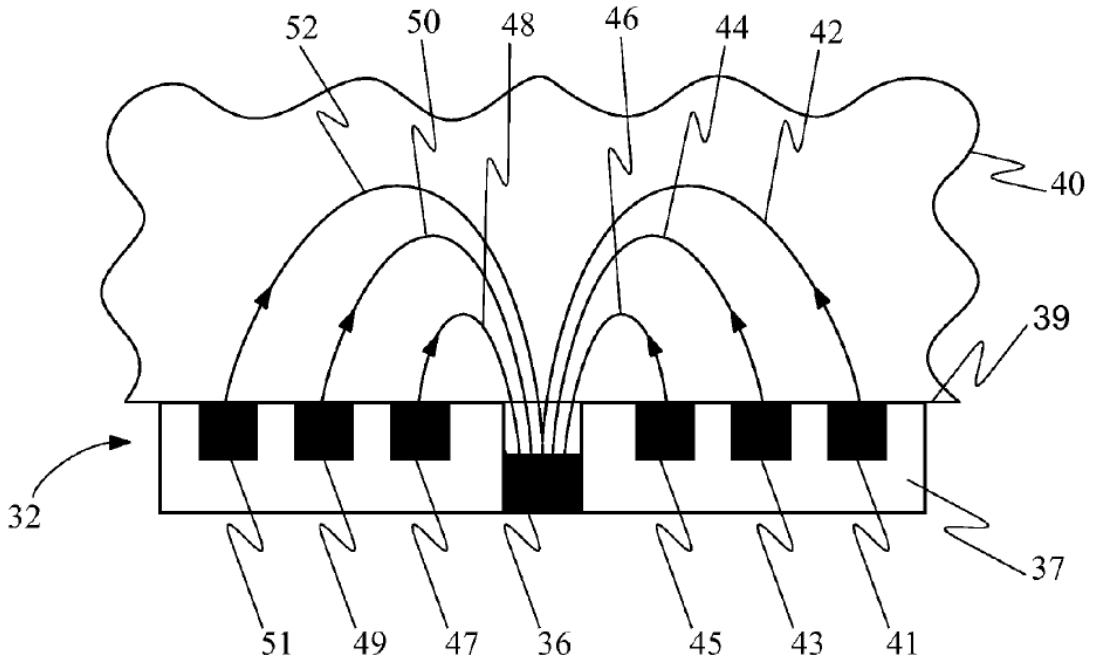

FIG. 2

Figure 2 above depicts a "cross-sectional view of a biometric sensor element couple to a tissue surface showing multiple mean optical paths." *Id.* at 4:45–47. Sensor head 32 includes light sources 41, 43, 45, 47, 49, 51 and detector 36. *Id.* at 7: 5–10. Optical paths 42, 44, 46, 48, 50, 52 show light passing through tissue 40. *Id.* Sensor head 32 is formed of optically opaque material 37.

MASIMO 2007
Apple v. Masimo
IPR2024-00294

Lumidigm's Figures 6 and 7A are reproduced below:

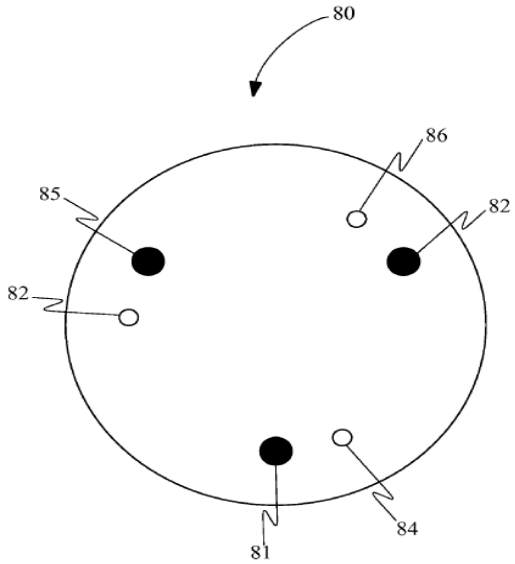

FIG. 6

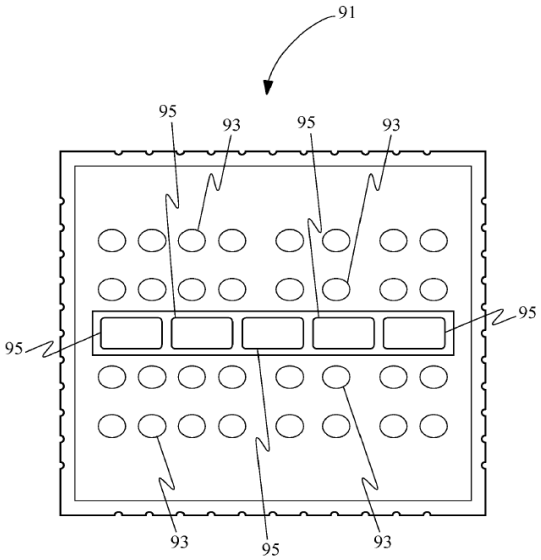

FIG. 7A

Figures 6 and 7A above illustrate top-views of biometric sensors according to two embodiments of the invention. *Id.* at 4:60–67. In Figure 6, light sensor 80 includes light sources 82, 84, 86 positioned relative to detectors 81, 83, 85. *Id.* at 9:14–16.[7] In Figure 7A, sensor 91 includes two rows of light sources 93 and one robe of detectors 95. *Id.* at 9:27–30.

2. Overview of Scharf

Scharf is titled "System Using Green Light to Determine Parameters of a Cardiovascular System." Ex. 1025, code (54). Scharf describes a reflectance oximeter that uses two green light sources to detect oxygen saturation of hemoglobin in a volume of intravascular blood. *Id.* at 2:39–42.

[7] It would appear that the reference character "82" on the right side of Figure 6 should read "83."

MASIMO 2007
Apple v. Masimo
IPR2024-00294

Scharf's Figure 3 is reproduced below:

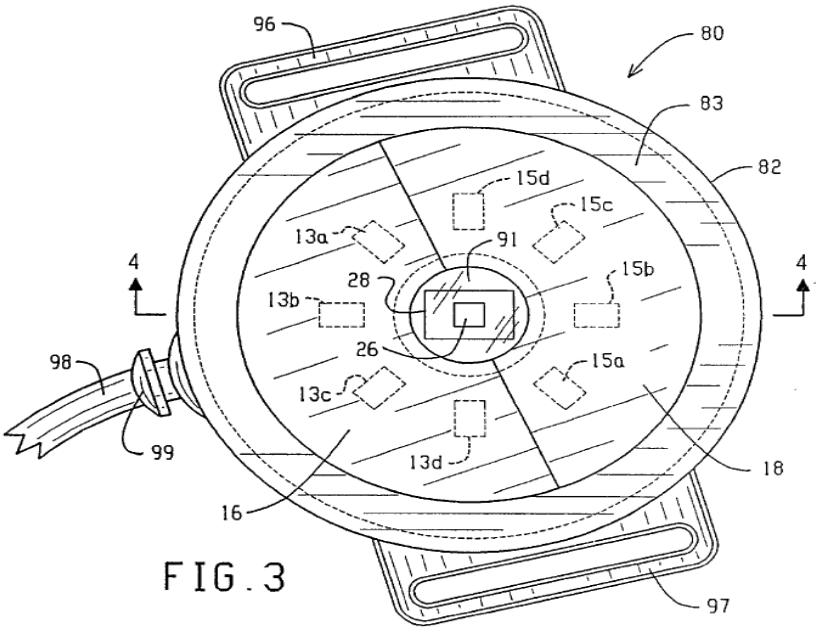

FIG. 3

Figure 3 above shows a bottom plan view of an oximeter probe according to an embodiment. *Id.* at 3:40–41. The oximeter probe may include green lights formed of light emitting diodes (LEDs) 13, 15. *Id.* at 4:18–20. Scharf explains that, depending on the particular type of green light sources, green optical filters 16, 18 may be needed. *Id.* at 4:30–34.

3. Overview of Kotanagi

Kotanagi is titled "Biological Information Measuring Device." Ex. 1007, code (54). Kotanagi describes that a biological information measuring device can include a biological sensor including a body and a protrusion formed on the lower surface of the body. *Id.* at code (57). Kotanagi explains that the protrusion can be formed with a "curved surface." *Id.* ¶ 80.

MASIMO 2007
Apple v. Masimo
IPR2024-00294

4. Discussion

A principal feature of each of the independent claims of the ’502 patent lies in the structure and arrangement of a “protrusion” located over four photodiodes arranged on an interior surface of a user-worn device. In particular, in claim 1 that feature reads as follows:

> a protrusion comprising:
>
> a convex surface extending over the interior surface,
>
> a plurality of openings in the convex surface extending through the protrusion and aligned with the four photodiodes, each opening defined by an opaque surface, and
>
> a plurality of windows, each of the windows extending across a different one of the openings[.]

Ex. 1001, 45:11–19.

Thus, in claim 1, the protrusion feature requires a convex surface and multiple openings defined by an opaque surface and associated with a plurality of windows, with each window extending over a different opening. Independent claims 19 and 28 have similar requirements. Although not explicitly recited in claim 1, in the context of the ’502 patent, the recited opaque surface is understood to aid in reducing “light piping” that reaches the photodiodes, which is an undesirable condition in which “light bypasses” the measurement site, e.g., human tissue, without being attenuated by that tissue. *See* Ex. 1001, 22:48–50; *see also* Prelim. Resp. 7–8 (description of light piping).[8]

[8] Independent claims 19 and 28, however, are explicit in reciting, respectively, that the opaque material is “configured to reduce an amount of light reaching the photodiodes without being attenuated by the tissue” (claim 19), and that that the “opaque surface [is] configured to reduce light piping” (claim 28).

MASIMO 2007
Apple v. Masimo
IPR2024-00294

To arrive at the protrusion requirement in the claims, Petitioner presents composite or modified figures that Petitioner contends would have emerged from the teachings of Lumidigm and Kotanagi. Although Lumidigm does not present side views of the optical sensor that is illustrated in its Figures 6 and 7A (reproduced *supra*), Petitioner contends that based on the combined teachings of Lumidigm and Kotanagi, the following figures emerge:

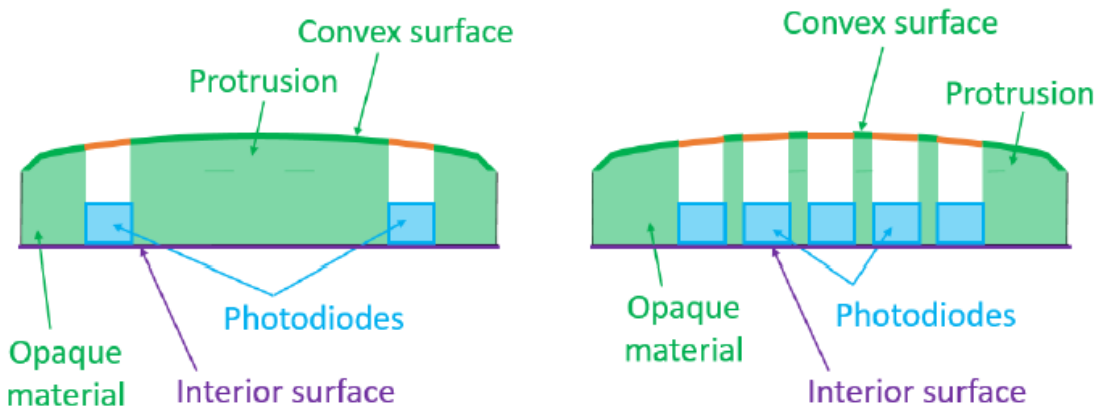

Pet. 43–44 (citing Ex. 1003 ¶ 130). In Petitioner's and Dr. Kenny's view, and as depicted in the modified figure above, the application of Kotanagi's curved surface to each of Lumidigm's Figures 6 and 7A results in a "combination device" that "has a plurality of openings, one per photodiode, extending through the protrusion and positioned over the photodiodes." *Id.* at 45 (citing Ex. 1003 ¶ 133) (emphasis omitted). The basis of Petitioner's proposed ground of unpatentability, however, does not end there.

To account for the requirement, for instance, in claim 1 each opening is defined by an opaque surface, Petitioner offers the following additional "[c]omposite figures":

MASIMO 2007
Apple v. Masimo
IPR2024-00294

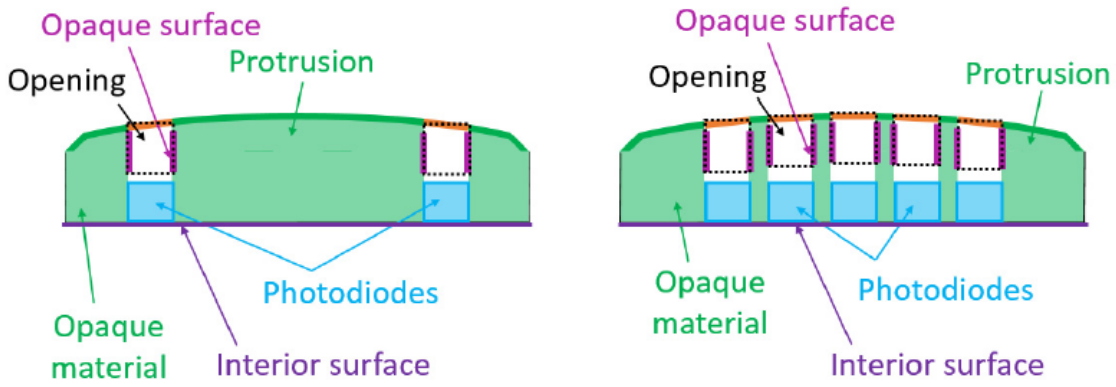

Pet. 45. According to Petitioner, the combined teachings of Lumidigm and Kotanagi additionally would be configured to include distinct opaque surfaces (shown in purple in the composite figures above) that extend along some portion of the recessed openings over each photodiode. *Id.*

Further still, in accounting for the requirements of the claims drawn to positioning different windows over each of the plurality of openings in the convex protrusion, Petitioner alleges that, in light of Scharf's teachings, the following further modified figures emerge:

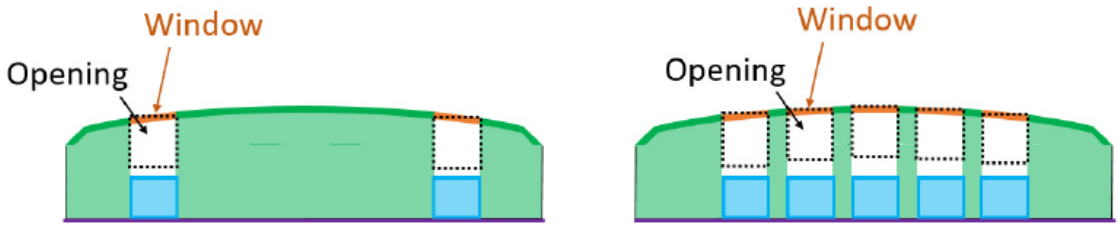

Id. at 46.

Although it is certainly the case that an obviousness analysis may take into account the inferences and creative steps that a skilled artisan might glean from the teachings of the prior art (*see, e.g.*, *KSR* , 550 U.S. at 418), one must be cognizant that "hindsight is not an available analytical mechanism to show obviousness." *See In re Omeprazole Patent Litig.*, 483 F.3d 1364, 1381 (Fed. Cir. 2007) (Newman, J., dissenting). Indeed, "we

MASIMO 2007
Apple v. Masimo
IPR2024-00294

cannot allow hindsight bias to be the thread that stitches together prior art patches into something that is the claimed invention." *See Metalcraft of Mayville, Inc. v. The Toro Co.*, 848 F.3d 1358, 1367 (Fed. Cir. 2017). Without the guidance provided by the claims of the '502 patent, it is difficult to conclude that Petitioner's postulation as to a particular structure that results from combining the teachings of Lumidigm, Kotanagi, and Scharf is based on an objective assessment of what those teachings would have conveyed to a skilled artisan. It is clear from the Petition, however, that such structural configuration is necessary as the basis for Petitioner's approach to arriving at the structural requirements of the claims.[9]

At the outset, we share Patent Owner's view, and that of its declarant, Dr. Duckworth (Ex. 2002), that none of the prior art on which Petitioner relies discloses a convex protrusion with multiple openings or windows for multiple detectors. *See, e.g.*, Prelim. Resp 28–29; Ex. 2002 ¶ 76. As discussed above, Petitioner attempts to arrive at such structure through a proposed amalgamation of prior art teachings that must include, for instance, arranging a convex protrusion with multiple openings or separate glass windows over Lumidigm's optical sensors. In our view, however, Petitioner simply does not explain adequately why such configuration results from the actual teachings of the prior art.

Moreover, in an effort to next account for a convex shape of the protrusions and openings, Petitioner relies on Kotanagi's curved protrusion

[9] Although Petitioner, in a footnote, generally contends that "other examples" of composite figure configurations "could be conceived" so as to render the challenged claims obvious, Petitioner does not provide further assessment or explanation in that regard. *See* Pet. 13 n.5. We find that general contention inadequately supported.

MASIMO 2007
Apple v. Masimo
IPR2024-00294

as providing, for instance, "better contact" and be "more comfortable" for a user of Lumidigm's detector. *See, e.g.*, Pet. 28–29. Yet, consistent with the arguments advanced by Patent Owner and Dr. Duckworth, we are not satisfied that Petitioner adequately explains why a skilled artisan would have expected that such benefits would apply to the convoluted combination of modifications Petitioner proposes to arrive at the claimed invention. *See, e.g.*, Prelim. Resp. 41–50; Ex. 2002 ¶¶ 150–162. Nor has Petitioner explained adequately why a skilled artisan would have assessed that Petitioner's reasoning applies to a protrusion configured to have specific characteristics, e.g., multiple distinct openings and opaque lateral surfaces, intended to provide a particular function, i.e., reduction of light piping, that is unaffiliated with concerns of contact or comfort. *See, e.g.*, Prelim. Resp. 41–51; Ex. 2002 ¶¶ 167–179.

Further still, we share Patent Owner's skepticism (*see, e.g.*, Prelim. Resp. 69–72) that Petitioner's reliance on Scharf's teachings justifies Petitioner's theory that different windows would be placed over different openings within a convex protrusion. *See, e.g.*, Pet. 31–32. Although Petitioner expresses that "glass covers" generally are known in the art, in our view, Petitioner does not explain adequately why the particular teachings of Scharf on which Petitioner relies give rise to the specific window configuration required by the noted claims. *See id.* Dr. Duckworth's testimony supports Patent Owner's argument that Scharf's teachings applied to a combination of Lumidigm and Kotanagi do not convey reasonably to a skilled artisan the positioning of windows over the openings of a convex protrusion in the manner urged by Petitioner. *See, e.g.*, Ex. 2002 ¶¶ 189–195. Moreover, left wanting from Petitioner's theories is why a person of ordinary skill in the art would seek to apply Scharf's teachings as to a sensor

MASIMO 2007
Apple v. Masimo
IPR2024-00294

face incorporating particular green optical filters 16, 18 intended to affect the output of light *emitters* (e.g., LEDs), so as to produce the particular placement of windows within different openings associated with the light *detectors* (i.e., photodiodes) of any combination of Lumidigm, Scharf, and Kotanagi.

We are mindful that Lumidigm discloses that its sensor head 32 (Fig. 2) may be formed of optically opaque material. *See* Ex. 1006, 8:1–4. We, however, take note of Patent Owner's arguments that Petitioner's proposed "opaque surface" structures illustrated in its composite figures from page 45 of the Petition (also reproduced *supra*) do not amount to such a surface that extends "through the protrusion" as required by each of claims 1, 19, and 28 or shows windows that are "lined with opaque material" as required by claim 19. *See* Prelim Resp. 56–57. In our view, those arguments credibly point out shortcomings in Petitioner's approach to account for the structure and characteristics of the opaque surface requirements of the claims.

Additionally, although Lumidigm discloses a desire to "minimize[s] the amount of light that can be detected after reflecting off the first (epidermal) surface of the tissue" (Ex. 1006, 8:4–7), we see some merit in Patent Owner's argument that such disclosure does not amount to avoiding light piping or detecting unattenuated light as is required by some, if not all, of the claims (*see* Prelim. Resp. 55–59). As discussed above, in the context of the '502 patent, "light piping" is understood as light that bypasses a measurement site. *See, e.g.*, Ex. 1001, 22:48–50. As Patent Owner and Dr. Duckworth note, Lumidigm seemingly discusses light that is reflected after tissue attenuation and does not express that its sensor is structured to address situations in which entirely unattenuated light, i.e., light that has

MASIMO 2007
Apple v. Masimo
IPR2024-00294

entirely bypassed the measurement site, is intended to not be detected. *See* Prelim. Resp. 55–59; Ex. 2002 ¶¶ 183–185.

After consideration of the record before us, we find questionable Petitioner's and Dr. Kenny's assessment and reasoning as to what a skilled artisan would have understood from the teachings of Lumidigm, Scharf, and Kotanagi as proposed by Petitioner here. We find persuasive Patent Owner's arguments that Petitioner's and Dr. Kenny's assessments are grounded in hindsight rather than based on due consideration of the teachings of the pertinent prior art. *See, e.g.*, Prelim. Resp. 25–27. Dr. Duckworth's testimony that one of ordinary skill in the art would not have combined the teachings of the prior art in the manner advocated by Petitioner further supports Patent Owner's arguments. *See, e.g.*, Ex. 2002 ¶¶ 167–179, 183–185, 189–195.

Based on the record here, we conclude that Petitioner has not shown a reasonable likelihood of success based on any of the proposed grounds that involve the combined teachings of Lumidigm, Scharf, and Kotanagi.[10]

III. CONCLUSION

Petitioner has not shown a reasonable likelihood that it would prevail with respect to at least one of the challenged claims.

IV. ORDER

In consideration of the foregoing, it is

[10] The additional teachings of Tran are not offered by Petitioner to overcome the deficiencies discussed with respect to the combination of Lumidigm, Scharf, and Kotanagi.

MASIMO 2007
Apple v. Masimo
IPR2024-00294

ORDERED that Petitioner's request for an *inter partes* review of claims 1–30 of the '502 patent Petition is *denied* and no trial is instituted.

MASIMO 2007
Apple v. Masimo
IPR2024-00294

FOR PETITIONER:

Walter Renner
Andrew Patrick
Dan Smith
Grace Kim
Gretchen DeVries
Hyun Jin In
FISH & RICHARDSON P.C.
Axf-ptab@fr.com
patrick@fr.com
dsmith@fr.com
gkim@fr.com
devries@fr.com
in@fr.com

FOR PATENT OWNER:

Irfan Lateef
Brian Claassen
Jarom Kesler
Jacob Peterson
Douglas Wentzel
KNOBBE, MARTENS, OLSON & BEAR, LLP
2ial@knobbe.com
2bcc@knobbe.com
2jzk@knobbe.com
2jup@knobbe.com
2dxw@knobbe.com

MASIMO 2007
Apple v. Masimo
IPR2024-00294