US 20060253010A1

(19) United States

(12) Patent Application Publication

(10) Pub. No.: US 2006/0253010 A1

(43) Pub. Date: Nov. 9, 2006

Brady et al.

(54) MONITORING DEVICE, METHOD AND SYSTEM

(76) Inventors: **Donald Brady**, Las Vegas, NV (US); **Sammy I. Elhag**, San Diego, CA (US); **Steve Lui**, San Diego, CA (US)

Correspondence Address:
Impact Sports Technologies, Inc.
2101 Plaza Del Dios
Las Vegas, NV 89102 (US)

(21) Appl. No.: **11/398,821**

(22) Filed: **Apr. 6, 2006**

Related U.S. Application Data

(63) Continuation-in-part of application No. 11/085,778, filed on Mar. 21, 2005.

(60) Provisional application No. 60/669,325, filed on Apr. 7, 2005. Provisional application No. 60/613,785, filed on Sep. 28, 2004.

Publication Classification

(51) **Int. Cl.**
A61B 5/00 (2006.01)

(52) **U.S. Cl.** **600/324**; 600/344; 128/921

(57) **ABSTRACT**

A monitoring device (**20**) and method (**200**) for monitoring the health of a user is disclosed herein. The monitoring device (**20**) is preferably a watch (**25**), an optical sensor (**30**) disposed on a band of the watch (**25**), a circuitry assembly (**35**) embedded within a main body of the watch (**25**), a display member (**40**) disposed on an exterior surface of the main of the watch, and a control component (**43**). The monitoring device (**20**) preferably displays the following information about the user: pulse rate; blood oxygenation levels; calories expended by the user of a pre-set time period; target zones of activity; time; distance traveled; and dynamic blood pressure. The watch (**25**) also displays the time of day on the display member (**40**).

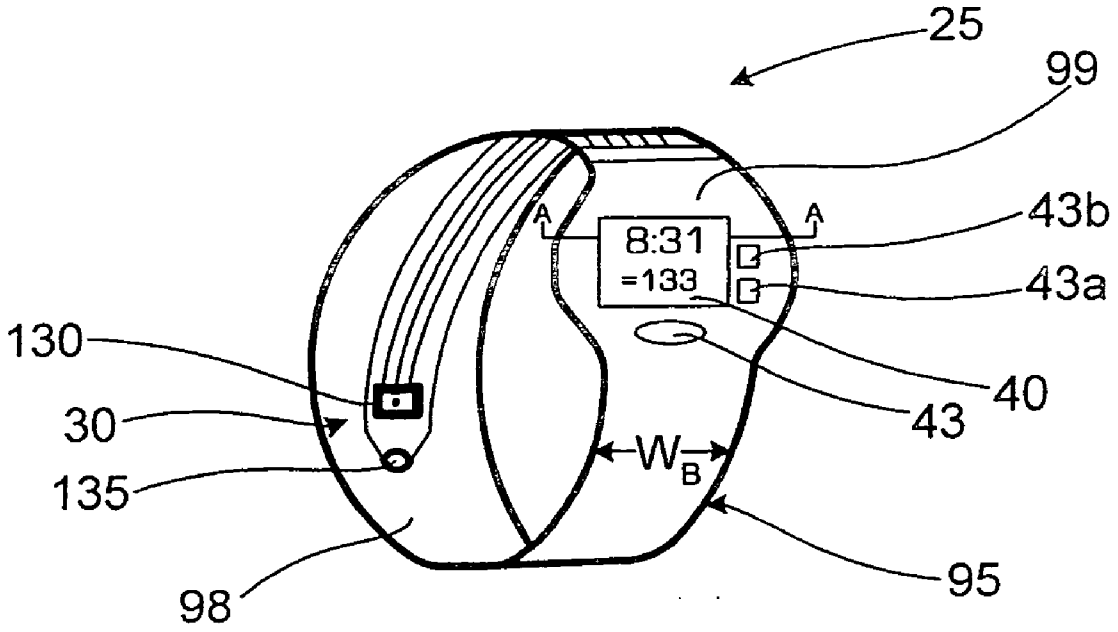

APPLE 1091
Apple v. Masimo
IPR2024-00249

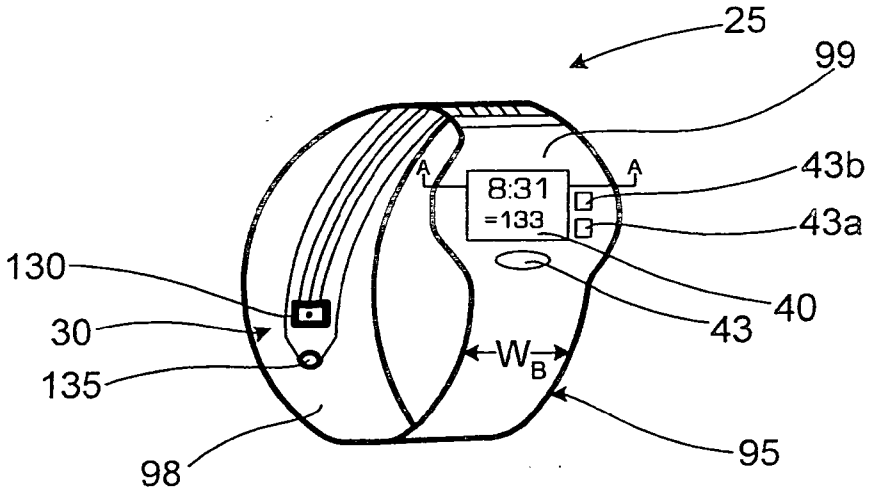

FIGURE 1

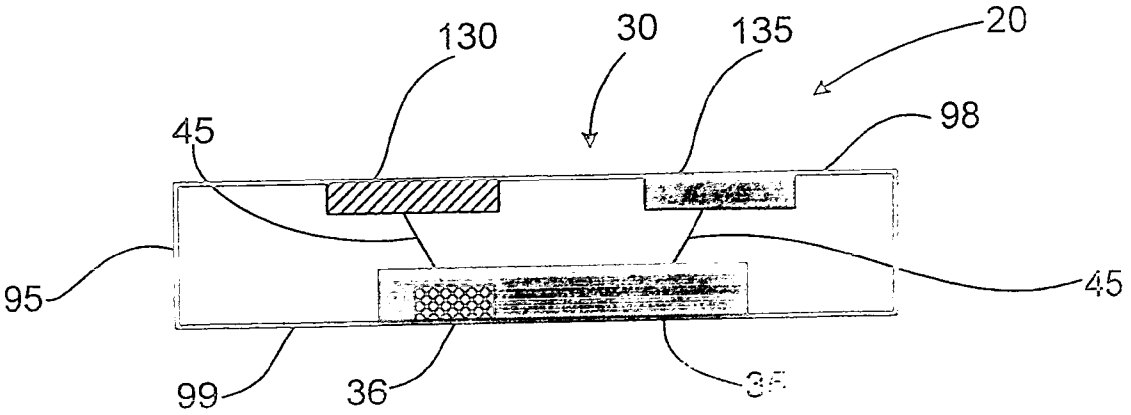

FIGURE 1A

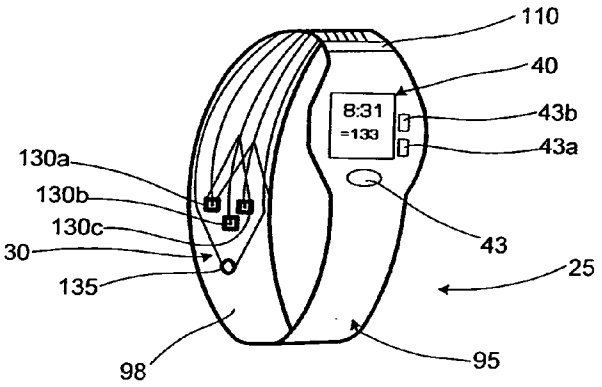

FIGURE 2

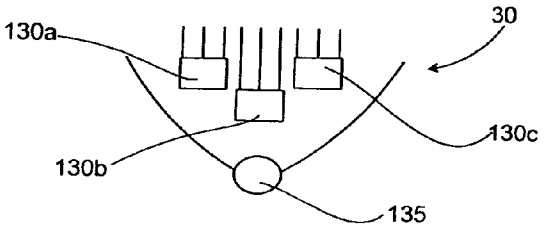

FIGURE 2A

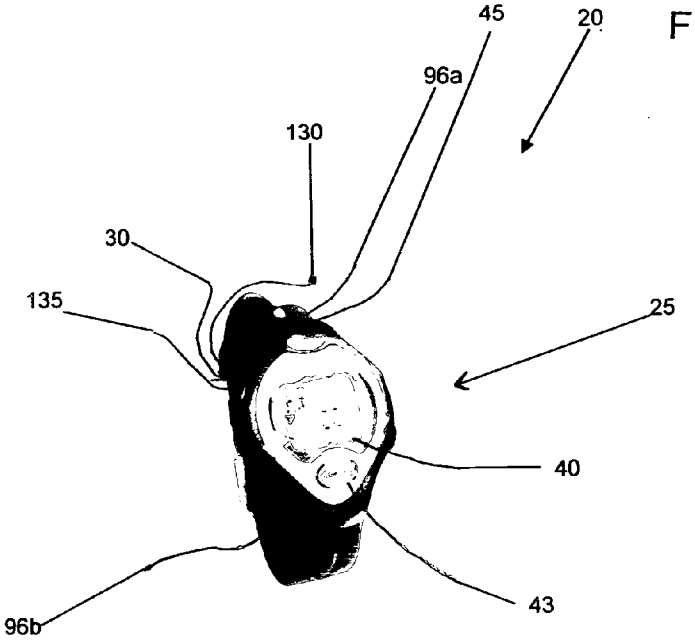

FIGURE 3

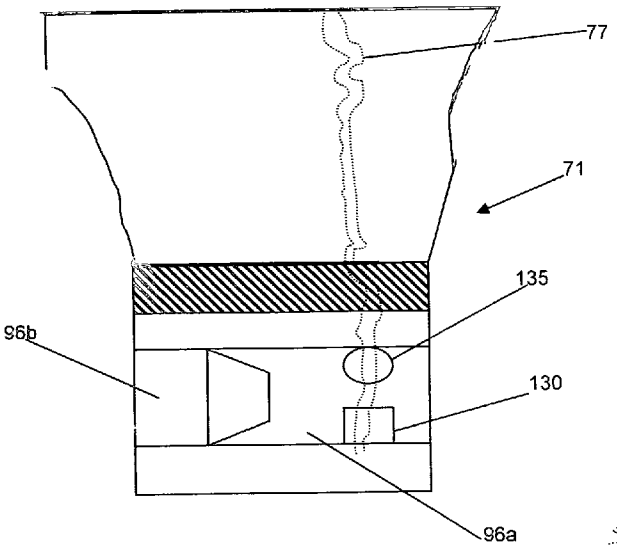

FIGURE 4

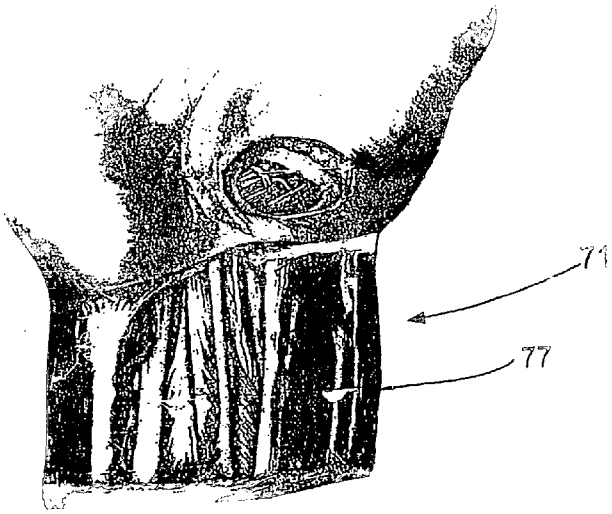

FIGURE 3

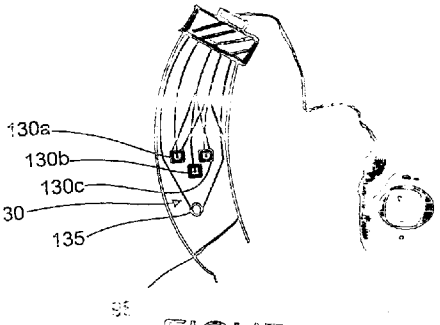

FIGURE 3A

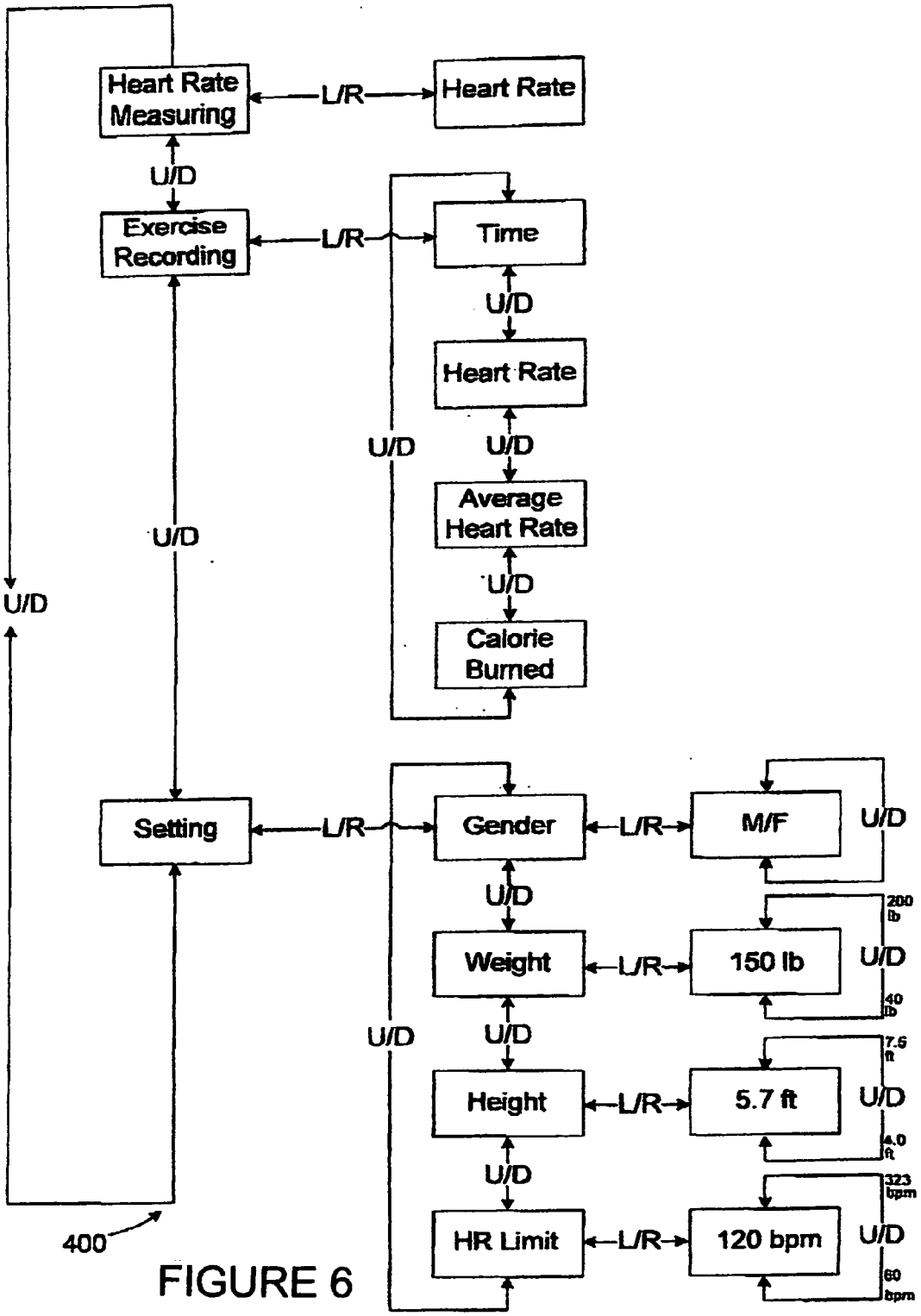
Heart Rate Measuring
L/R
Heart Rate
U/D
Exercise Recording
L/R
Time
U/D
Heart Rate
U/D
U/D
Average Heart Rate
U/D
U/D
Calorie Burned
U/D
Setting
L/R
Gender
L/R
M/F
U/D
U/D
Weight
L/R
150 lb
U/D
200 lb
40 lb
U/D
U/D
Height
L/R
5.7 ft
U/D
7.5 ft
4.0 ft
U/D
HR Limit
L/R
120 bpm
U/D
323 bpm
60 bpm
400

FIGURE 6

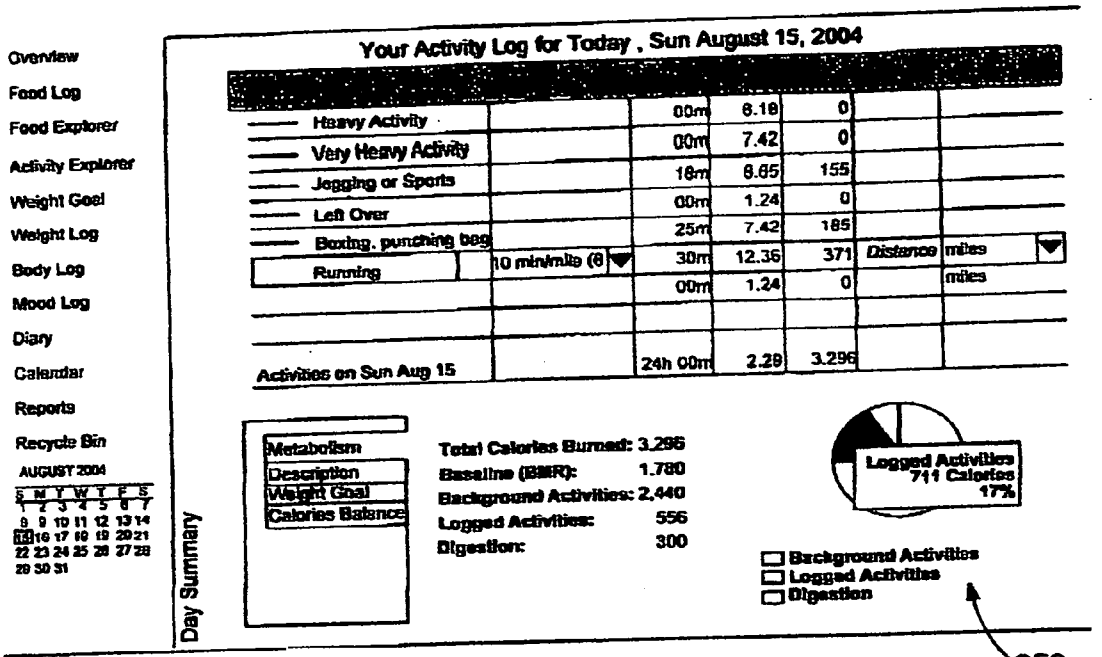

FIGURE 7

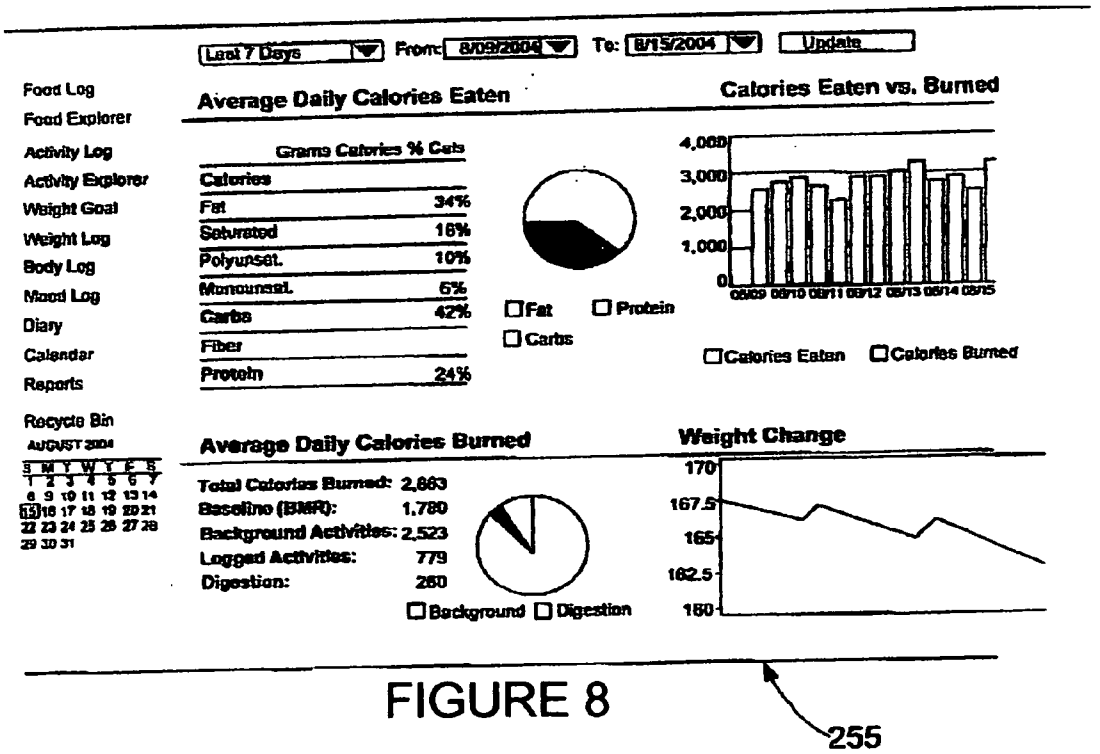

FIGURE 8

MONITORING DEVICE, METHOD AND SYSTEM

CROSS REFERENCES TO RELATED APPLICATION

[0001] The Present application claims priority to U.S. Provisional Patent Application No. 60/669,325, filed on Apr. 7, 2005. The Present application is also a continuation-in-part application of U.S. patent application Ser. No. 11/085,778, filed on Mar. 21, 2005, which is a continuation-in-part application of U.S. Provisional Application No. 60/613,785, filed on Sep. 28, 2004, now abandoned.

STATEMENT REGARDING FEDERALLY SPONSORED RESEARCH OR DEVELOPMENT

[0002] Not Applicable

BACKGROUND OF THE INVENTION

[0003] 1. Field of the Invention

[0004] The present invention is related to health monitoring devices. More specifically, the present invention relates to a wrist worn article for monitoring a user's vital signs.

[0005] 2. Description of the Related Art

[0006] There is a need to know how one is doing from a health perspective. In some individuals, there is a daily, even hourly, need to know one's health. The prior art has provided some devices to meet this need.

[0007] One such device is a pulse oximetry device. Pulse oximetry is used to determine the oxygen saturation of arterial blood. Pulse oximeter devices typically contain two light emitting diodes: one in the red band of light (660 nanometers) and one in the infrared band of light (940 nanometers). Oxyhemoglobin absorbs infrared light while deoxyhemoglobin absorbs visible red light. Pulse oximeter devices also contain sensors that detect the ratio of red/infrared absorption several hundred times per second. A preferred algorithm for calculating the absorption is derived from the Beer-Lambert Law, which determines the transmitted light from the incident light multiplied by the exponential of the negative of the product of the distance through the medium, the concentration of the solute and the extinction coefficient of the solute.

[0008] The major advantages of pulse oximetry devices include the fact that the devices are non-invasive, easy to use, allows for continuous monitoring, permits early detection of desaturation and is relatively inexpensive. The disadvantages of pulse oximetry devices are that it is prone to artifact, it is inaccurate at saturation levels below 70%, and there is a minimal risk of burns in poor perfusion states. Several factors can cause inaccurate readings using pulse oximetry including ambient light, deep skin pigment, excessive motion, fingernail polish, low flow caused by cardiac bypass, hypotension, vasoconstriction, and the like.

[0009] Chin et al., U.S. Pat. No. 6,018,673 discloses a pulse oximetry device that is positioned entirely on a user's nail to reduce out of phase motion signals for red and infrared wavelengths for use in a least squares or ratio-of-ratios technique to determine a patient's arterial oxygen saturation.

[0010] Smith, U.S. Pat. No. 4,800,495 discloses an apparatus for processing signals containing information concerning the pulse rate and the arterial oxygen saturation of a patient. Smith also discloses maintaining the position of the LEDs and detectors to prevent motion-artifacts from being produced in the signal.

[0011] Another method for using a pulse oximeter to measure blood pressure is disclosed in U.S. Pat. No. 6,616,613 to Goodman for a 'Physiological Signal Monitoring System'. The '613 patent discloses processing a pulse oximetry signal in combination with information from a calibrating device to determine a patient's blood pressure.

[0012] Chen et al, U.S. Pat. No. 6,599,251 discloses a system and method for monitoring blood pressure by detecting pulse signals at two different locations on a subjects body, preferably on the subject's finger and earlobe. The pulse signals are preferably detected using pulse oximetry devices.

[0013] Schulze et al., U.S. Pat. No. 6,556,852, discloses the use of an earpiece having a pulse oximetry device and thermopile to monitor and measure physiological variables of a user.

[0014] Malinouskas, U.S. Pat. No. 4,807,630, discloses a method for exposing a patient's extremity, such as a finger, to light of two wavelengths and detecting the absorbance of the extremity at each of the wavelengths.

[0015] Jobsis et al., U.S. Pat. No. 4,380,240 discloses an optical probe with a light source and a light detector incorporated into channels within a deformable mounting structure which is adhered to a strap. The light source and the light detector are secured to the patient's body by adhesive tapes and pressure induced by closing the strap around a portion of the body.

[0016] Tan et al., U.S. Pat. No. 4,825,879 discloses an optical probe with a T-shaped wrap having a vertical stem and a horizontal cross bar, which is utilized to secure a light source and an optical sensor in optical contact with a finger. A metallic material is utilized to reflect heat back to the patient's body and to provide opacity to interfering, ambient light. The sensor is secured to the patient's body using an adhesive or hook and loop material.

[0017] Modgil et al., U.S. Pat. No. 6,681,454 discloses a strap that is composed of an elastic material that wraps around the outside of an oximeter probe and is secured to the oximeter probe by attachment mechanisms such as Velcro, which allows for adjustment after initial application without producing excessive stress on the spring hinge of the oximeter probe.

[0018] Diab et al., U.S. Pat. No. 6,813,511 discloses a disposable optical probe suited to reduce noise in measurements, which is adhesively secured to a patient's finger, toe, forehead, earlobe or lip.

[0019] Diab et al., U.S. Pat. No. 6,678,543 discloses an oximeter sensor system that has a reusable portion and a disposable portion. A method for precalibrating a light sensor of the oximeter sensor system is also disclosed.

[0020] Tripp, Jr. et al., U.S. Statutory Invention Registration Number H1039 discloses an intrusion free physiological condition monitor that utilizes pulse oximetry devices.

[0021] Hisano et al., U.S. Pat. No. 6,808,473, discloses a headphone-type exercise aid which detects a pulse wave using an optical sensor to provide a user with an optimal exercise intensity.

[0022] In monitoring one's health there is a constant need to know how many calories have been expended whether exercising or going about one's daily routine. A calorie is a measure of heat, generated when energy is produced in our bodies. The amount of calories burned during exercise is a measure of the total amount of energy used during a workout. This can be important, since increased energy usage through exercise helps reduce body fat. There are several means to measure this expenditure of energy. To calculate the calories burned during exercise one multiplies the intensity level of the exercise by one's body weight (in kilograms). This provides the amount of calories burned in an hour. A unit of measurement called a MET is used to rate the intensity of an exercise. One MET is equal to the amount of energy expended at rest.

[0023] For example, the intensity of walking 3 miles per hour ("mph") is about 3.3 METS. At this speed, a person who weighs 132 pounds (60 kilograms) will burn about 200 calories per hour (60×3.3=198).

[0024] The computer controls in higher-quality exercise equipment can provide a calculation of how many calories are burned by an individual using the equipment. Based on the workload, the computer controls of the equipment calculate exercise intensity and calories burned according to established formulae.

[0025] The readings provided by equipment are only accurate if one is able to input one's body weight. If the machine does not allow this, then the "calories per hour" or "calories used" displays are only approximations. The machines have built-in standard weights (usually 174 pounds) that are used when there is no specific user weight.

[0026] There are devices that utilize a watch-type monitor to provide the wearer with heart rate as measured by a heartbeat sensor in a chest belt.

[0027] The prior art has failed to provide a means for monitoring one's health that is accurate, easy to wear on one's body for extended time periods, allows the user to input information and control the output, and provides sufficient information to the user about the user's health. Thus, there is a need for a monitoring device that can be worn for an extended period and provide health information to a user. Further, there is a need for an add-on product to enhance the communication of information provided by a sports watch to an individual wearing the sports watch.

BRIEF SUMMARY OF THE INVENTION

[0028] The present invention provides a solution to the shortcomings of the prior art. The present invention is accurate, comfortable to wear by a user for extended time periods, is light weight, and provides sufficient real-time information to the user about the user's health. Further, the present invention may be added to a sports watch to enhance the amount of information provided to the user.

[0029] One aspect of the present invention is a monitoring device comprising a digital watch and at least one band of the watch having an optical sensor connected to a circuitry assembly. The circuitry assembly is in communication with the digital watch to provide health-related information for display on the display unit of the watch. In particular, the band with the optical sensor and circuitry assembly may be utilized with the BODYLINK system used on or with TIMEX digital watches.

[0030] Another aspect of the present invention is a monitoring device comprising a digital watch and at least one band of the watch having an optical sensor in communication with the digital watch to provide health-related information for display on the display unit of the watch. The location of the optical sensor on the band allows for integration with a conventional digital watch such as a TIMEX digital watch, several of which are disclosed at www.timex.com. In particular, the band with the optical sensor may be utilized with the BODYLINK system used on or with TIMEX digital watches.

[0031] Another aspect of the present invention is a monitoring device for monitoring the health of a user. The monitoring device includes an article, an optical device for generating a pulse waveform, a circuitry assembly embedded within the article, a display member positioned on an exterior surface of the article, and a control means attached to the article.

[0032] The article is preferably a watch having a main body and bands connectable to each other. The article preferably has a minimal mass, one to five ounces, and each band is preferably flexible so that the user can wear the watch the entire day if necessary. The monitoring device allows the user to track calories burnt during a set time period, monitor heart rate, blood oxygenation levels, distance traveled, target zones and optionally dynamic blood pressure.

[0033] Another aspect of the present invention is a method for monitoring a user's vital signs. The method includes generating a signal corresponding to the flow of blood through an artery of the user. The signal is generated from an optical device. Next, the heart rate data of the user and an oxygen saturation level data of the user is generated from the signal. Next, the heart rate data of the user and the oxygen saturation level data of the user are processed for analysis of calories expended by the user and for display of the user's heart rate and blood oxygen saturation level. Next, the calories expended by the user, the user's heart rate or the user's blood oxygen saturation level are displayed on a display member disposed on an exterior surface of an article, which is controlled by the user using a control component extending from the article.

[0034] Having briefly described the present invention, the above and further objects, features and advantages thereof will be recognized by those skilled in the pertinent art from the following detailed description of the invention when taken in conjunction with the accompanying drawings.

BRIEF DESCRIPTION OF THE SEVERAL VIEWS OF THE DRAWINGS

[0035] **FIG. 1** is a perspective view of a preferred embodiment of a monitoring device worn by a user.

[0036] **FIG. 1A** is a cross-sectional view of a band of a watch of the present invention.

[0037] **FIG. 2** is a perspective view of an alternative embodiment of a monitoring device worn by a user.

[0038] **FIG. 2A** is an isolated view of a light source and plurality of photodetectors of the monitoring device of **FIG. 2**.

[0039] **FIG. 3** is a perspective view of a watch of the present invention.

[0040] **FIG. 3A** is an enlarged view of a band of a watch, and the watch.

[0041] **FIG. 4** is a view of a user's wrist with the user's radial artery shown in phantom lines with an optical sensor of an article of the present invention placed over the radial artery.

[0042] **FIG. 5** is a cut-away of a user's wrist to illustrate the user's radial artery.

[0043] **FIG. 6** is a flow chart for using the control component to input information and output information on a display of the monitoring device.

[0044] **FIG. 7** is an image of an activity log of information obtained from a monitoring device.

[0045] **FIG. 8** is an image of calorie information obtained from a monitoring device.

DETAILED DESCRIPTION OF THE INVENTION

[0046] As shown in **FIGS. 1-4**, a monitoring device is generally designated **20**. The monitoring device **20** preferably includes an article **25**, an optical sensor **30**, a circuitry assembly **35**, a control component **43**, connection wires **45**, and optionally a display member **40**. The monitoring device **20** is preferably worn on a user's wrist **71**.

[0047] The article **25**, which is preferably a watch, preferably has a main body portion **95**, a first band **96***a* and a second band **96***b*. The watch **25** is sized to securely attach to a user's wrist **71**. The watch **25** is adopted to act as a monitoring device or a monitoring device is integrated into a watch. The term article and watch are used interchangeably and those skilled in the pertinent art will recognize that a watch is a preferred embodiment of the article **25**.

[0048] It is desirous to adapt the article **25** to the anatomy of the user's wrist. Each of the first band **96***a* and the second **96***b* is preferably composed of neoprene, leather, synthetic leather, or other similar material, or a combination thereof. The article **25** preferably has a mass ranging from 5 grams to 50 grams. Preferably, the lower the mass of the article **25**, the more comfort to the user. The optical sensor **30** and optional circuitry assembly **35** are preferably disposed on one of the first band **96***a* or second band **96***b*.

[0049] The optical sensor **30** is preferably positioned on an interior surface **98** of one of the first band **96***a* or second band **96***b* of the watch **25**. The optical sensor **30** is preferably connected to the circuitry assembly **35** by the connection wires **45**. The connection wires **45** are preferably embedded within one of the first band **96***a* or second band **96***b* of the watch **25**, and also connected to the main body portion **95**.

[0050] The optical sensor **30** of the monitoring device **20** is preferably positioned over the radial artery **77** of a user. However, those skilled in the pertinent art will recognize that the optical sensor may be placed over other arteries of the user without departing from the scope and spirit of the present invention. Further, the optical sensor **30** need only be in proximity to an artery of the user in order to obtain a reading or signal.

[0051] In a preferred embodiment, the optical sensor **30** is a photodetector **130** and a single light emitting diode ("LED") **135** transmitting light at a wavelength of approximately 660 nanometers. As the heart pumps blood through the arteries in the user's ankle or wrist, blood cells absorb and transmit varying amounts of the light depending on how much oxygen binds to the cells' hemoglobin. The photodetector **30**, which is typically a photodiode, detects transmission at the red wavelengths, and in response generates a radiation-induced signal. Yet in an alternative embodiment, the optical device **30** is based on green light wherein a LED generates green light (λ~500-600 nm), and the phtotodetector detects the green light.

[0052] Alternatively, the optical sensor **30** is a pulse oximetry device with a light source **135** that typically includes LEDs that generate both red (λ~660 nm) and infrared (λ~900 nm) radiation. As the heart pumps blood through the arteries in the wrist of the user, blood cells absorb and transmit varying amounts of the red and infrared radiation depending on how much oxygen binds to the cells' hemoglobin. The photodetector **130**, which is typically a photodiode, detects transmission at the red and infrared wavelengths, and in response generates a radiation-induced signal.

[0053] Alternatively, the optical sensor **30** is pulse oximetry device comprising the photodetector **130**, a first light source **135** and a second light source **135***a*, not shown. In this embodiment, the first light source **135** emits light in an infrared range (λ~900 nm) and the second light source **135***a* emits light in a red range (λ~630 nm).

[0054] The light source **135** typically is a light-emitting diode that emits light in a range from 570 nanometers to 1100 nanometers. As the heart pumps blood through the patient's wrist, blood cells absorb and transmit varying amounts of the red and infrared radiation depending on how much oxygen binds to the cells' hemoglobin. The photodetector **130**, which is typically a photodiode, detects transmission at the red and infrared wavelengths, and in response generates a radiation-induced current that travels through the connection wires **45** to the circuitry assembly **35** on the article **25**.

[0055] Alternatively, as shown in **FIGS. 2 and 2**A, the optical sensor includes a plurality of photodetectors **130** and a single LED **135**.

[0056] A preferred photodetector **130** is a light-to-voltage photodetector such as the TSL260R and TSL261, TSL261R photodetectors available from TAOS, Inc of Plano Tex. Alternatively, the photodetector **130** is a light-to-frequency photodetector such as the TSL245R, which is also available from TAOS, Inc. The light-to-voltage photodetectors have an integrated transimpedance amplifier on a single monolithic integrated circuit, which reduces the need for ambient light filtering. The TSL261 photodetector preferably operates at a wavelength greater than 750 nanometers, and optimally at 940 nanometers, which would preferably have a LED that radiates light at those wavelengths. A preferred

optical sensor **30** utilizing green light is a TRS1755 sensor from TAOS, Inc of Plano Tex. The TRS1755 comprises a green LED light source (567 nm wavelength) and a light-to-voltage converter. The output voltage is directly proportional to the reflected light intensity.

[**0057**] In a preferred embodiment, the circuit assembly **35** is flexible to allow for the contour of the user's wrist, and the movement thereof. Preferably the dimensions of a board of the circuit assembly **35** are approximately 39 millimeters (length) by approximately 21 millimeters (width) by 0.5 millimeters (thickness). The circuit assembly **35** is preferably embedded within a band **96***a* of the watch **25**. The circuit assembly **35** is preferably shaped to fit within the first band **96***a*.

[**0058**] Alternatively, the circuitry assembly **35** includes a flexible microprocessor board and a flexible pulse oximetry board. An alternative pulse oximetry board is a BCI MICRO POWER oximetry board, which is a low power, micro-size easily integrated board which provides blood oxygenation level, pulse rate (heart rate), signal strength bargraph, plethysmogram and status bits data. The size of the board is preferably 25.4 millimeters (length)×12.7 millimeters (width)×5 millimeters (thickness). The microprocessor board receives data from the pulse oximetry board and processes the data to display on the display member **40**. The microprocessor can also store data. The microprocessor can process the data to display pulse rate, blood oxygenation levels, calories expended by the user of a pre-set time period, target zone activity, time and dynamic blood pressure. Alternatively, the circuitry assembly **35** is a single board with a pulse oximetry circuit and a microprocessor.

[**0059**] The display member **40** is preferably a light emitting diode ("LED"). Alternatively, the display member **40** is a liquid crystal display ("LCD") or other similar display device.

[**0060**] On the circuitry assembly **35**, a microcontroller processes the signal generated from the optical sensor **30** to generate the plurality of vital sign information for the user which is displayed on the display member **40**. The control component **43** is connected to the circuit assembly **35** to control the input of information and the output of information displayed on the display member **40**.

[**0061**] The monitoring device **20** is preferably powered by a power source positioned on the watch **25**. Preferably the power source is a battery accessible at an interior surface of the main body portion **95**. The power source is preferably connected to the circuit assembly **35** by positive wire and ground wire, and the ground wire and positive wire are embedded within the article **25**.

[**0062**] In an alternative embodiment, a short range wireless transceiver **36** is included in the circuitry assembly **35** for transmitting information processed from the optical sensor **30** to a receiver on the watch **25**. Alternatively, the information is transmitted to a handheld device or a computer, not shown, to form a system. The display member **40** is optional in this embodiment.

[**0063**] The short-range wireless transceiver is preferably a transmitter operating on a wireless protocol, e.g. Bluetooth™, part-15, or 802.11. "Part-15" refers to a conventional low-power, short-range wireless protocol, such as that used in cordless telephones. The short-range wireless transmitter (e.g., a Bluetooth™ transmitter) receives information from the microprocessor and transmits this information in the form of a packet through an antenna. The external laptop computer or hand-held device features a similar antenna coupled to a matched wireless, short-range receiver that receives the packet. In certain embodiments, the hand-held device is a cellular telephone with a Bluetooth circuit integrated directly into a chipset used in the cellular telephone. In this case, the cellular telephone may include a software application that receives, processes, and displays the information. The secondary wireless component may also include a long-range wireless transmitter that transmits information over a terrestrial, satellite, or 802.11-based wireless network. Suitable networks include those operating at least one of the following protocols: CDMA, GSM, GPRS, Mobitex, DataTac, iDEN, and analogs and derivatives thereof. Alternatively, the handheld device is a pager or PDA.

[**0064**] A flow chart diagram **400** for using the control component **43** with the display member **40** is shown in **FIG. 6**. As mentioned above, the control component **43** allows a user to scroll and select from terms displayed on the display member **40**. User inputs preferably include age, gender, weight, height and resting heart rate which can be inputted and stored in a memory of the circuit assembly **35**. The real time heart rate of the user is preferably displayed as a default display, and the user's real time heart rate is preferably updated every ten seconds based on measurements from the optical sensor **30**. Based on the user inputs, the calories expended by the user for a set time period are calculated and displayed on the display member **40** as desired by the user using the control component **43**. The monitoring device **20** will also preferably include a conventional stop watch function, which is displayed on the display member **40** as desired by the user. The display member **40** preferably displays a visual alert when a user enters or exits a target zone such as a cardio zone or fat burning zone. The monitoring device **20** optionally includes an audio alert for entering or exiting such target zones.

[**0065**] The user can use the control component **43** to maneuver between the user's real-time heart rate and real time calories expended by the user during a set time period. The user can also scroll through a menu-like display on the display member **40** and enter options by pushing downward on the control component **43**. The options can preferably include a "My Data" section which the user inputs by scrolling and selection an option by pushing downward, such as selecting between male and female for gender. The user can also select target zones by scrolling through a different section of the menu. As discussed below, each target zone is calculated using a formula based upon the user's personal data. In operation, when a specific target zone is selected, a visual alert in the form of a specific display such as an icon-like picture is displayed on the display member **40** to demonstrate that the user is now in the specified target zone. The icon preferably blinks for a set period of time such as ten seconds. Those skilled in the pertinent art will recognize that other options may be included on the menu-like display without departing from the spirit and scope of the present invention.

[**0066**] In yet an alternative embodiment, an accelerometer, not shown, is embedded within the main body portion **95** of the watch **25** and connected to the circuitry assembly

35 in order to provide information on the distance traveled by the user. In a preferred embodiment, the accelerometer is a multiple-axis accelerometer, such as the ADXL202 made by Analog Devices of Norwood, Mass. This device is a standard micro-electronic-machine ("MEMs") module that measures acceleration and deceleration using an array of silicon-based structures.

[**0067**] In yet another embodiment, the monitoring device **20** comprises a first thermistor, not shown, for measuring the temperature of the user's skin and a second thermistor, not shown, for measuring the temperate of the air. The temperature readings are displayed on the display member **40** and the skin temperature is preferably utilized in further determining the calories expended by the user during a set time period. One such commercially available thermistor is sold under the brand LM34 from National Semiconductor of Santa Clara, Calif. A microcontroller that is utilized with the thermistor is sold under the brand name ATMega 8535 by Atmel of San Jose, Calif.

[**0068**] The monitoring device **20** may also be able to download the information to a computer for further processing and storage of information. The download may be wireless or through cable connection. The information can generate an activity log **250** such as shown in **FIG. 7**, or a calorie chart **255** such as shown in **FIG. 8**.

[**0069**] The microprocessor can use various methods to calculate calories burned by a user. One such method uses the Harris-Benedict formula Other methods are set forth at www.unu.edu/unupress/food2/which relevant parts are hereby incorporated by reference. The Harris-Benedict formula uses the factors of height, weight, age, and sex to determine basal metabolic rate (BMR). This equation is very accurate in all but the extremely muscular (will underestimate calorie needs) and the extremely overweight (will overestimate caloric needs) user.

[**0070**] The equations for men and women are set forth below:

Men: BMR=66+(13.7×mass (kg))+(5×height (cm))−(6.8×age (years))

Women: BMR=655+(9.6×mass)+(1.8×height)−(4.7×age)

[**0071**] The calories burned are calculated by multiplying the BMR by the following appropriate activity factor: sedentary; lightly active; moderately active; very active; and extra active.

Sedentary=BMR multiplied by 1.2 (little or no exercise, desk job)

Lightly active=BMR multiplied by 1.375 (light exercise/sports 1-3 days/wk)

Moderately Active=BMR multiplied by 1.55 (moderate exercise/sports 3-5 days/wk)

Very active=BMR multiplied by 1.725 (hard exercise/sports 6-7 days/wk)

Extra Active=BMR multiplied by 1.9 (hard daily exercise/sports & physical job or 2×day training, marathon, football camp, contest, etc.)

[**0072**] Various target zones may also be calculated by the microprocessor. These target zones include: fat burn zone; cardio zone; moderate activity zone; weight management zone; aerobic zone; anaerobic threshold zone; and red-line zone.

Fat Burn Zone=(220−age)×60%&70%

An example for a thirty-eight year old female:

(220−38)×0.6=109

(220−38)×0.7=127

[**0073**] Fat Burn Zone between 109 to 127 heart beats per minute.

Cardio Zone=(220−your age)×70%&80%

An example for a thirty-eight year old female:

(220−38)×0.7=127

(220−38)×0.8=146

[**0074**] Cardio zone is between 127 & 146 heart beats per minute.

[**0075**] Moderate Activity Zone, at 50 to 60 percent of your maximum heart rate, burns fat more readily than carbohydrates. That is the zone one should exercise at if one wants slow, even conditioning with little pain or strain.

[**0076**] Weight Management Zone, at 60 to 70 percent of maximum, strengthens ones heart and burns sufficient calories to lower one's body weight.

[**0077**] Aerobic Zone, at 70 to 80 percent of maximum, not only strengthens one's heart but also trains one's body to process oxygen more efficiently, improving endurance.

[**0078**] Anaerobic Threshold Zone, at 80 to 90 percent of maximum, improves one's ability to rid one's body of the lactic-acid buildup that leads to muscles ache near one's performance limit. Over time, training in this zone will raise one's limit.

[**0079**] Red-Line Zone, at 90 to 100 percent of maximum, is where serious athletes train when they are striving for speed instead of endurance.

EXAMPLE ONE

Female, 30 yrs old, height 167.6 centimeters, weight 54.5 kilograms.

The BMR=655+523+302−141=1339 calories/day.

[**0080**] The BMR is 1339 calories per day. The activity level is moderately active (work out 34 times per week). The activity factor is 1.55. The TDEE=1.55×1339=2075 calories/day. TDEE is calculated by multiplying the BMR of the user by the activity multiplier of the user.

[**0081**] A system may use the heart rate to dynamically determine an activity level and periodically recalculate the calories burned based upon that factor. An example of such an activity level look up table might be as follows:

Activity/Intensity Multiplier Based on Heart Rate

Sedentary=BMR×1.2 (little or no exercise, average heart rate 65-75 bpm or lower)

Lightly active=BMR×3.5 (light exercise, 75 bpm-115 bpm)

Mod. active=BMR×5.75 (moderate exercise, 115-140 pm)

Very active=BMR×9.25 (hard exercise, 140-175 bpm)

Extra active=BMR×13 (175 bpm-maximum heart rate as calculated with MHR formula)

[**0082**] For example, while sitting at a desk, a man in the above example might have a heart rate of between 65 and 75 beats per minute (BPM). (The average heart rate for an adult

is between 65 and 75 beats per minute.) Based on this dynamically updated heart rate his activity level might be considered sedentary. If the heart rate remained in this range for 30 minutes, based on the Harris-Benedict formula he would have expended 1.34 calories a minute×1.2 (activity level)×30 minutes, which is equal to 48.24 calories burned.

[0083] If the man were to run a mile for 30 minutes, with a heart rate ranging between 120 and 130 bpm, his activity level might be considered very active. His caloric expenditure would be 1.34 calories a minute×9.25 (activity level)× 30 minutes, which is equal to 371.85.

[0084] Another equation is weight multiplied by time multiplied by an activity factor multiplied by 0.000119.

[0085] From the foregoing it is believed that those skilled in the pertinent art will recognize the meritorious advancement of this invention and will readily understand that while the present invention has been described in association with a preferred embodiment thereof, and other embodiments illustrated in the accompanying drawings, numerous changes modification and substitutions of equivalents may be made therein without departing from the spirit and scope of this invention which is intended to be unlimited by the foregoing except as may appear in the following appended claim. Therefore, the embodiments of the invention in which an exclusive property or privilege is claimed are defined in the following appended claims.

We claim as our invention:

1. A monitoring device for monitoring the health of a user, the monitoring device comprising:

an article having a main body, a first band attached to one end of the main body and a second band attached to a second end of the body, the first band and the second band having a connection mechanism for connecting to each other;

means for measuring blood flow through an artery of the wrist of the user, the measuring means disposed on the first band of the article;

means for calculating calories expended by the user during a time period, the calculating means disposed on the main body of the article;

means for visually displaying the calories expended by the user, the visually displaying means disposed on an exterior surface of the main body of the article; and

means for controlling the input information and the output of information displayed on the visually displaying means, the controlling means disposed on the exterior surface of the main body of the article.

2. The monitoring device according to claim 1 further comprising means for determining the pulse rate of the user.

3. The monitoring device according to claim 1 further comprising a time function mechanism disposed on the main body of the article to provide a time of day.

4. The monitoring device according to claim 1 wherein each of the first band and the second band of the article is composed of a neoprene material.

5. The monitoring device according to claim 1 wherein the measuring means is an optical sensor comprising a light-to-voltage photodetector capable of transmitting a digital signal, and at least one light emitting diode capable of radiating light ranging from 600 nanometers to 1100 nanometers.

6. The monitoring device according to claim 1 wherein the measuring means is a pulse oximetry sensor comprising a light-to-voltage photodetector capable of transmitting a digital signal, first light emitting diode capable of radiating red light and a second light emitting diode capable of emitting infrared light.

7. The monitoring device according to claim 1 wherein the measuring means is an optical sensor comprising a light-to-frequency photodetector capable of transmitting a digital signal, and at least one light emitting diode capable of radiating light ranging from 570 nanometers to 1100 nanometers.

8. The monitoring device according to claim 1 wherein the measuring means is an optical sensor comprising a plurality of light-to-voltage photodetectors capable of transmitting a digital signal, and at least one light emitting diode capable of radiating light ranging from 600 nanometers to 1100 nanometers.

9. The monitoring device according to claim 1 wherein the measuring means is an optical sensor comprising a plurality of light-to-frequency photodetectors capable of transmitting a digital signal, and at least one light emitting diode capable of radiating light ranging from 570 nanometers to 1100 nanometers.

10. A monitoring device for monitoring the health of a user, the monitoring device comprising:

an article to be worn on the user's wrist, the article comprising a main body having an interior surface and an exterior surface, a first band attached to one end of the main body and a second band attached to a second end of the body, the first band and the second band having a connection mechanism for connecting to each other;

an optical sensor disposed on an interior surface of the first band of the article;

a circuitry assembly embedded within the main body of the article;

a display member disposed on an exterior surface of the main body of the article; and

a control component disposed on the exterior surface of the main body of the article, the control component controlling the input of information and the output of information displayed on the display member.

11. The monitoring device according to claim 10 wherein the optical sensor comprises a light-to-voltage photodetector capable of transmitting a digital signal, and at least one light emitting diode capable of radiating light ranging from 600 nanometers to 1100 nanometers.

12. The monitoring device according to claim 10 wherein the optical sensor comprises a light-to-frequency photodetector capable of transmitting a digital signal, and at least one light emitting diode capable of radiating light ranging from 570 nanometers to 1100 nanometers.

13. The monitoring device according to claim 10 wherein the optical sensor comprises a plurality of light-to-voltage photodetectors capable of transmitting a digital signal, and at least one light emitting diode capable of radiating light ranging from 600 nanometers to 1100 nanometers.

14. The monitoring device according to claim 10 wherein the optical sensor comprises a plurality of light-to-frequency photodetectors capable of transmitting a digital signal, and at least one light emitting diode capable of radiating light ranging from 570 nanometers to 1100 nanometers.

15. A watch with a monitoring device for monitoring the health of a user, the watch comprising:

a main body having an interior surface and an exterior surface, the main body comprising a timepiece mechanism;

a first band connected to a first end of the main body;

a second band connected to a second end of the main body, the first band and the second connectable to each other;

an optical sensor disposed on the interior surface of the first band;

a circuitry assembly embedded within the first band, the circuitry assembly comprising a microprocessor and connected to the optical sensor;

a display member disposed on an exterior surface of the main body; and

a control component disposed on the exterior surface of the main body, the control component controlling the input of information and the output of information displayed on the display member.

16. The watch according to claim 15 wherein the optical sensor comprises a light-to-voltage photodetector capable of transmitting a digital signal, and at least one light emitting diode capable of radiating light ranging from 600 nanometers to 1100 nanometers.

17. The monitoring device according to claim 15 wherein the optical sensor comprises a light-to-frequency photodetector capable of transmitting a digital signal, and at least one light emitting diode capable of radiating light ranging from 570 nanometers to 1100 nanometers.

18. The monitoring device according to claim 15 wherein the optical sensor comprises a plurality of light-to-voltage photodetectors capable of transmitting a digital signal, and at least one light emitting diode capable of radiating light ranging from 600 nanometers to 1100 nanometers.

19. The monitoring device according to claim 15 wherein the optical sensor comprises a plurality of light-to-frequency photodetectors capable of transmitting a digital signal, and at least one light emitting diode capable of radiating light ranging from 570 nanometers to 1100 nanometers.

20. The monitoring device according to claim 15 wherein the circuitry assembly is in wireless communication with a receiver on the main body.

* * * * *