US 20060211924A1

(19) United States

(12) Patent Application Publication

(10) Pub. No.: US 2006/0211924 A1

(43) Pub. Date: Sep. 21, 2006

Dalke et al.

(54) MULTIPLE WAVELENGTH SENSOR EMITTERS

(76) Inventors: **David Dalke**, Irvine, CA (US); **Ammar Al-Ali**, Tustin, CA (US); **Mohamed Diab**, Mission Viejo, CA (US); **Marcelo Lamego**, Rancho Santa Margarita, CA (US); **Robert Smith**, Lake Forest, CA (US)

Correspondence Address:
KNOBBE MARTENS OLSON & BEAR LLP
2040 MAIN STREET
FOURTEENTH FLOOR
IRVINE, CA 92614 (US)

(21) Appl. No.: **11/367,013**

(22) Filed: **Mar. 1, 2006**

Related U.S. Application Data

(60) Provisional application No. 60/657,596, filed on Mar. 1, 2005. Provisional application No. 60/657,281, filed on Mar. 1, 2005. Provisional application No. 60/657,268, filed on Mar. 1, 2005. Provisional application No. 60/657,759, filed on Mar. 1, 2005.

Publication Classification

(51) **Int. Cl.**
A61B 5/00 (2006.01)

(52) **U.S. Cl.** **600/310**; 600/326

(57) **ABSTRACT**

A physiological sensor has light emitting sources, each activated by addressing at least one row and at least one column of an electrical grid. The light emitting sources are capable of transmitting light of multiple wavelengths and a detector is responsive to the transmitted light after attenuation by body tissue.

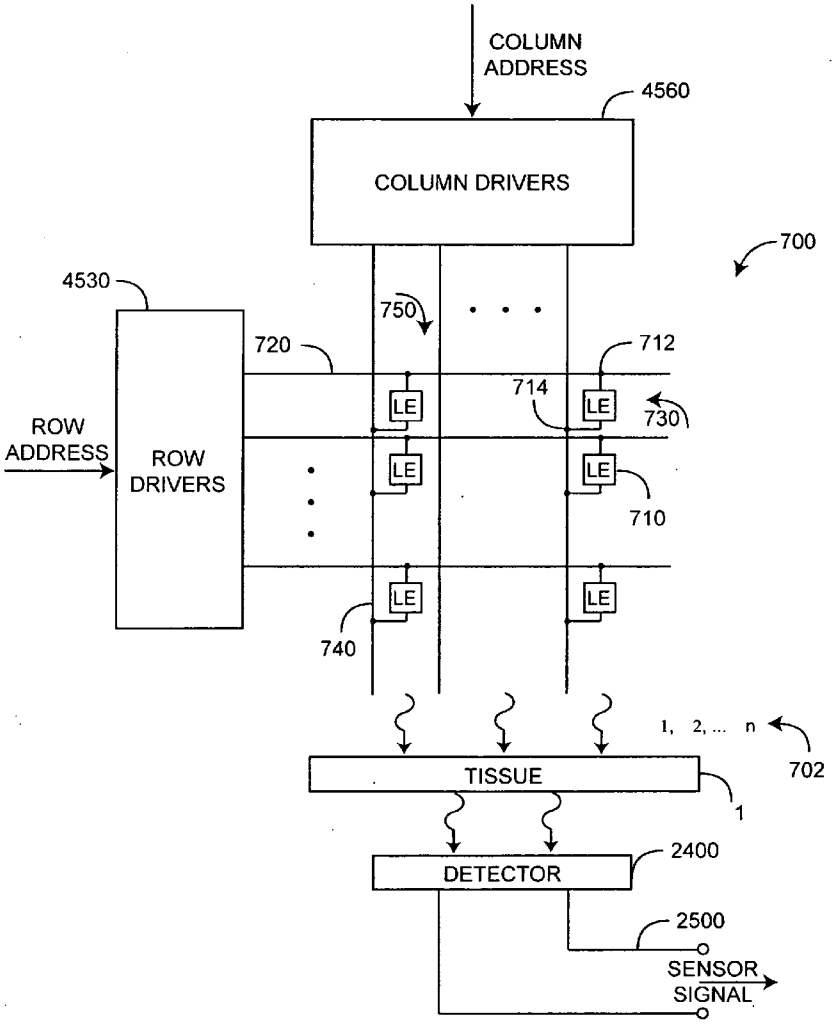

APPLE 1112
Apple v. Masimo
IPR2024-00294

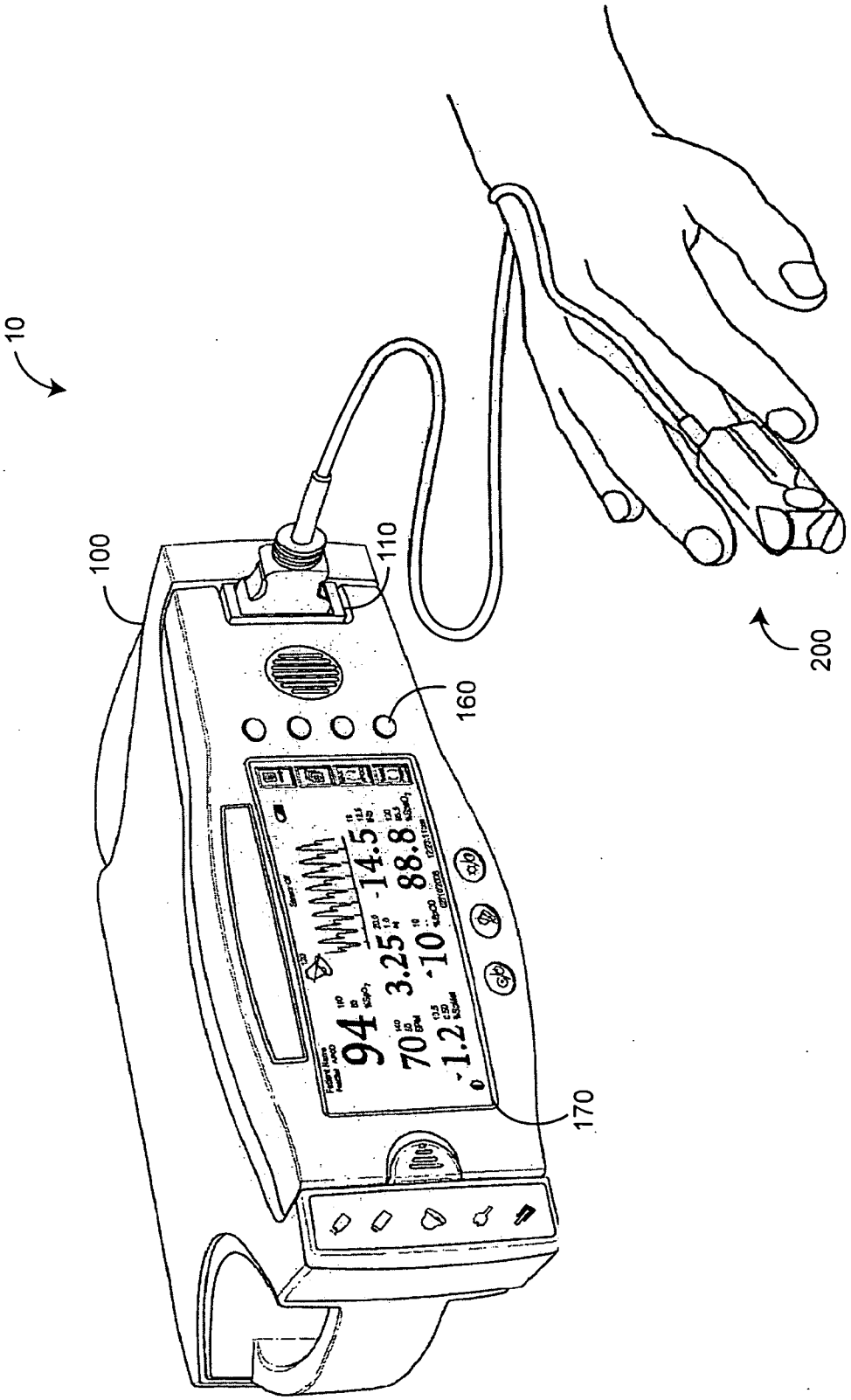

FIG. 1

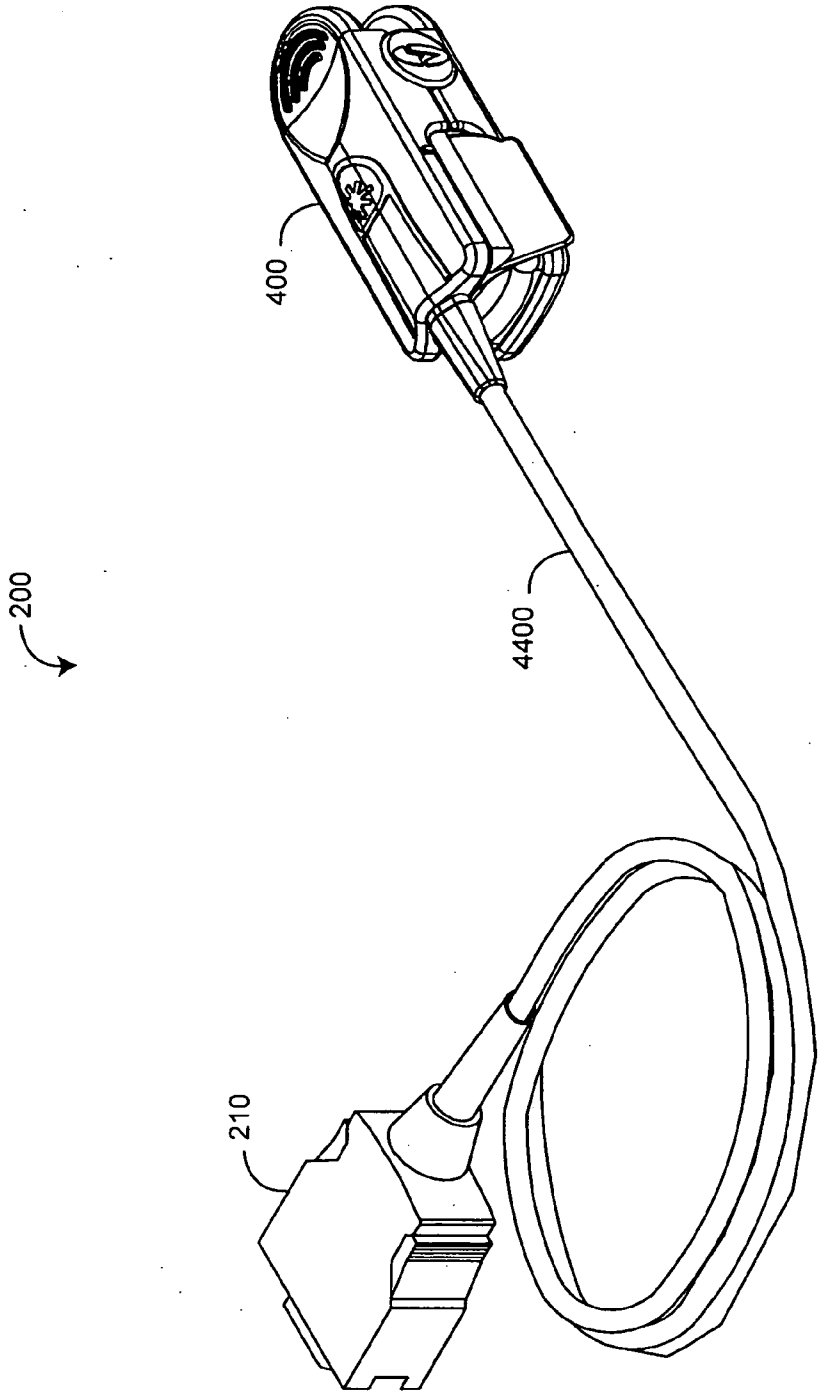

FIG. 2A

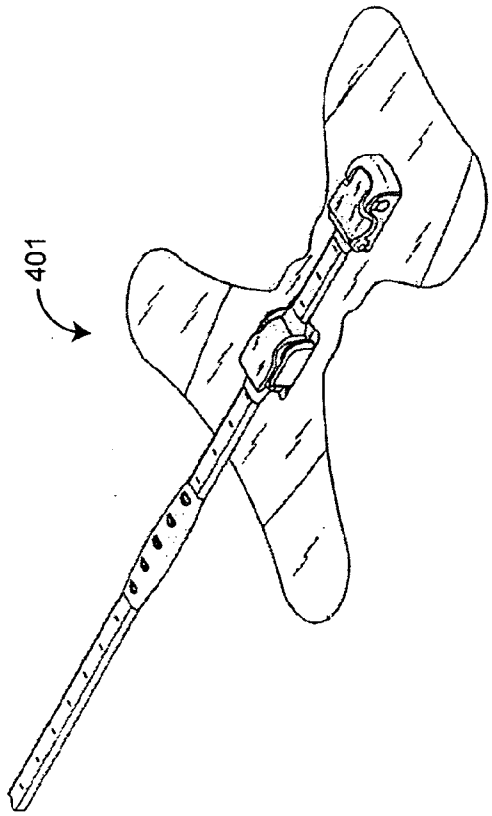

FIG. 2B

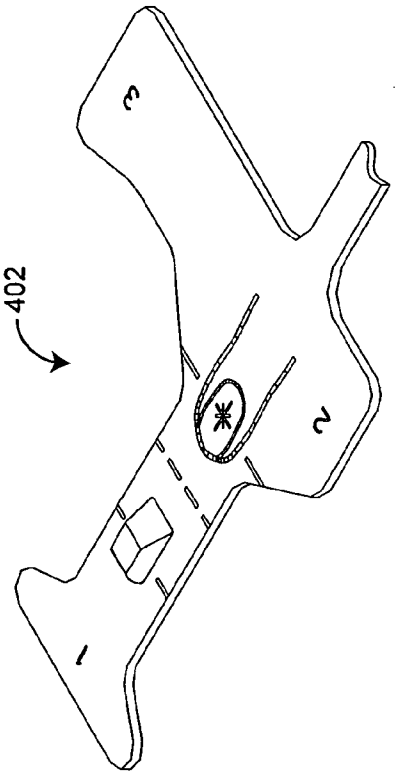

FIG. 2C

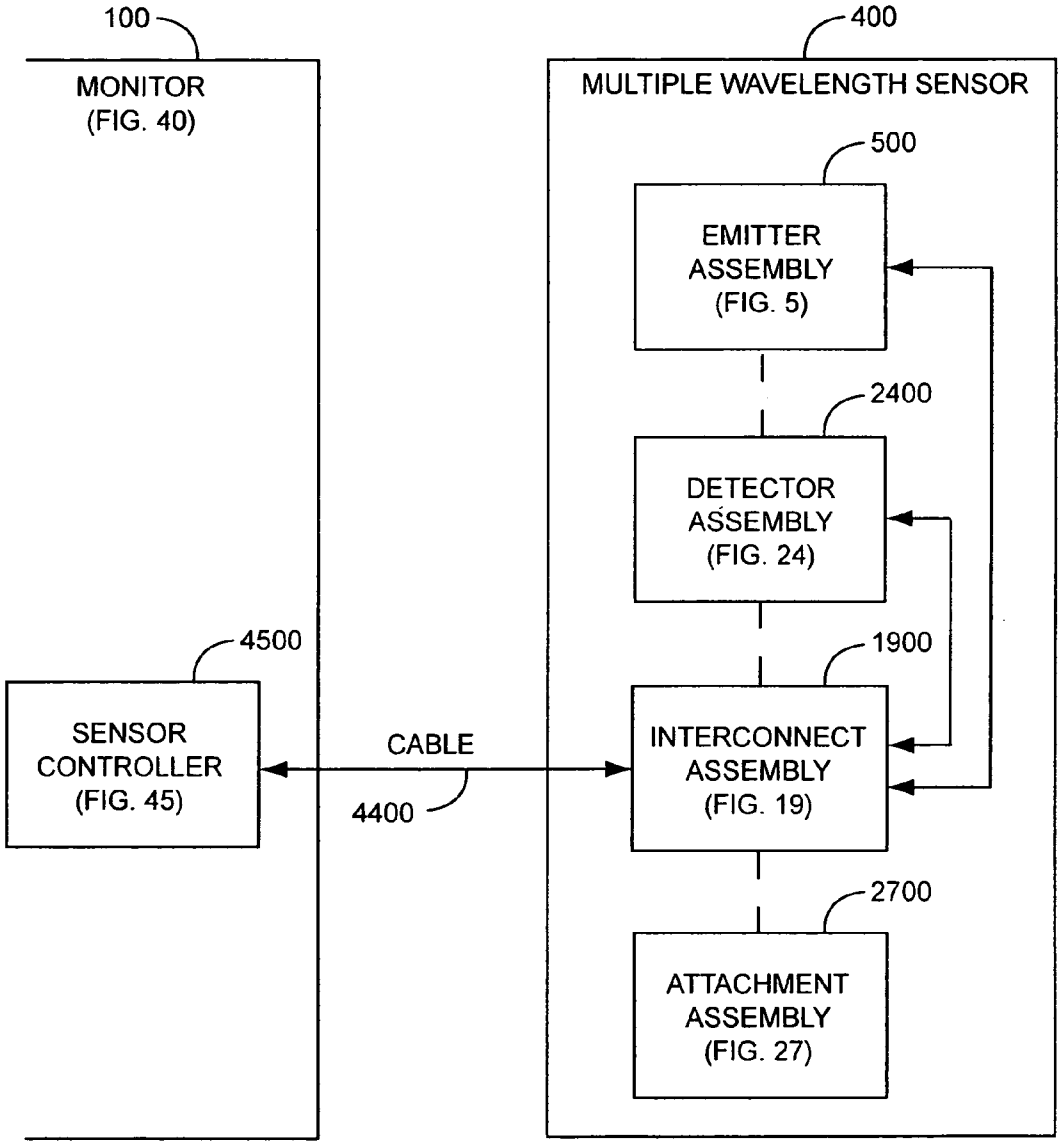
100
MONITOR
(FIG. 40)
400
MULTIPLE WAVELENGTH SENSOR
500
EMITTER
ASSEMBLY
(FIG. 5)
2400
DETECTOR
ASSEMBLY
(FIG. 24)
1900
INTERCONNECT
ASSEMBLY
(FIG. 19)
2700
ATTACHMENT
ASSEMBLY
(FIG. 27)
4500
SENSOR
CONTROLLER
(FIG. 45)
CABLE
4400

FIG. 3

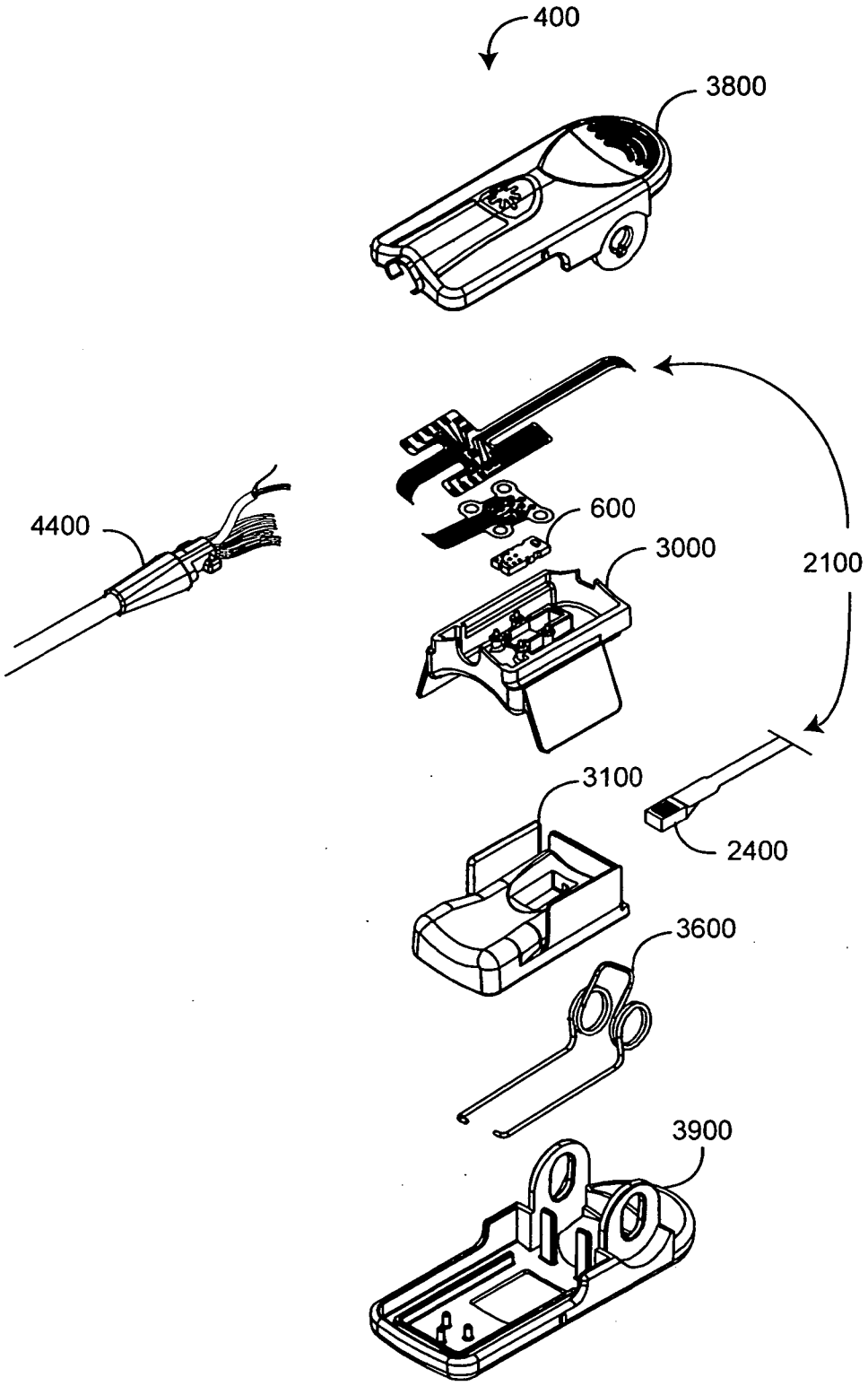

FIG. 4

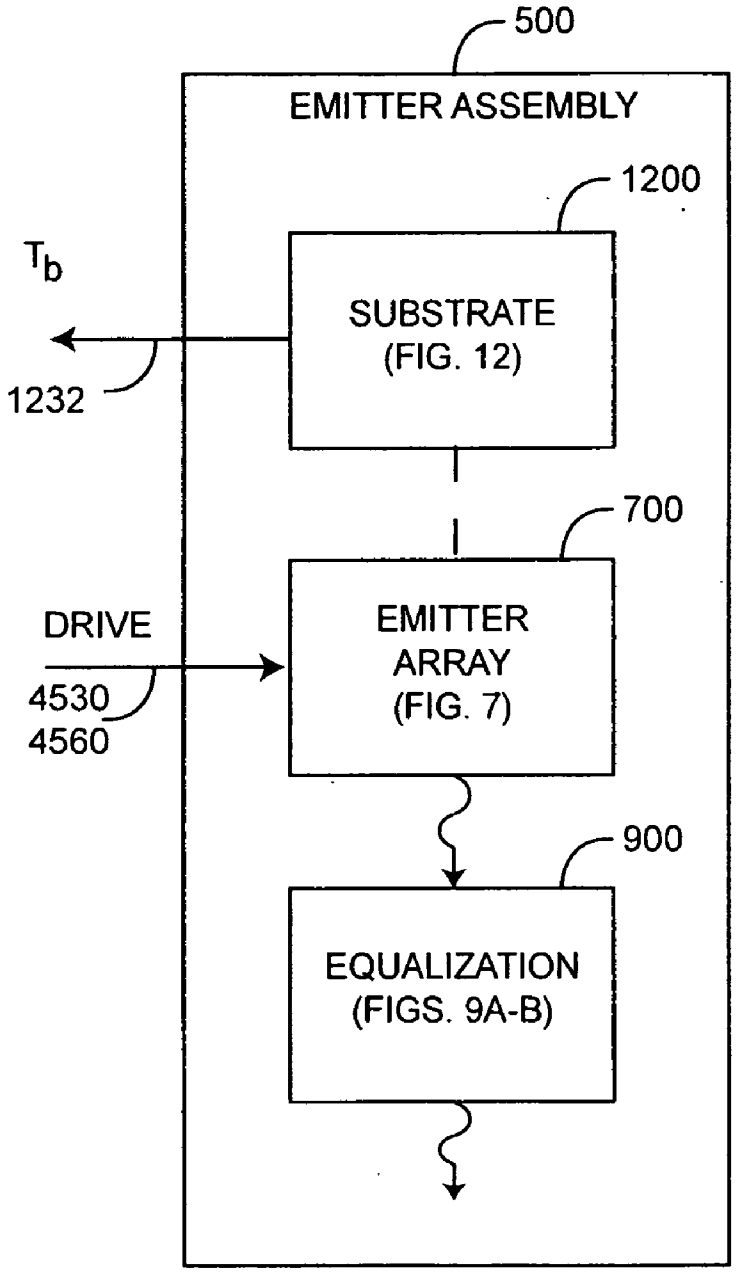
500
EMITTER ASSEMBLY
1200
T_b
SUBSTRATE
(FIG. 12)
1232
700
DRIVE
EMITTER
ARRAY
(FIG. 7)
4530
4560
900
EQUALIZATION
(FIGS. 9A-B)

FIG. 5

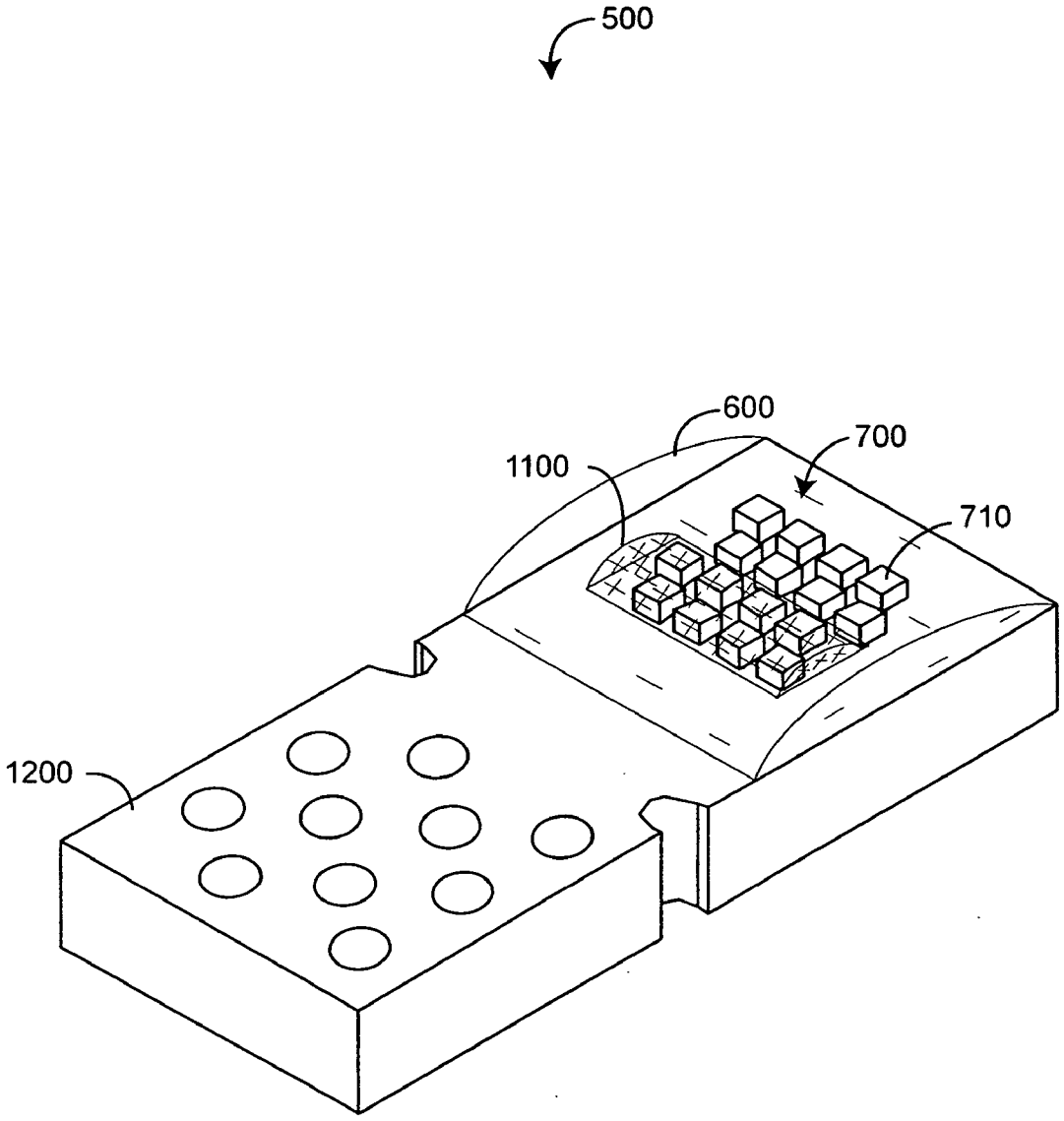

FIG. 6

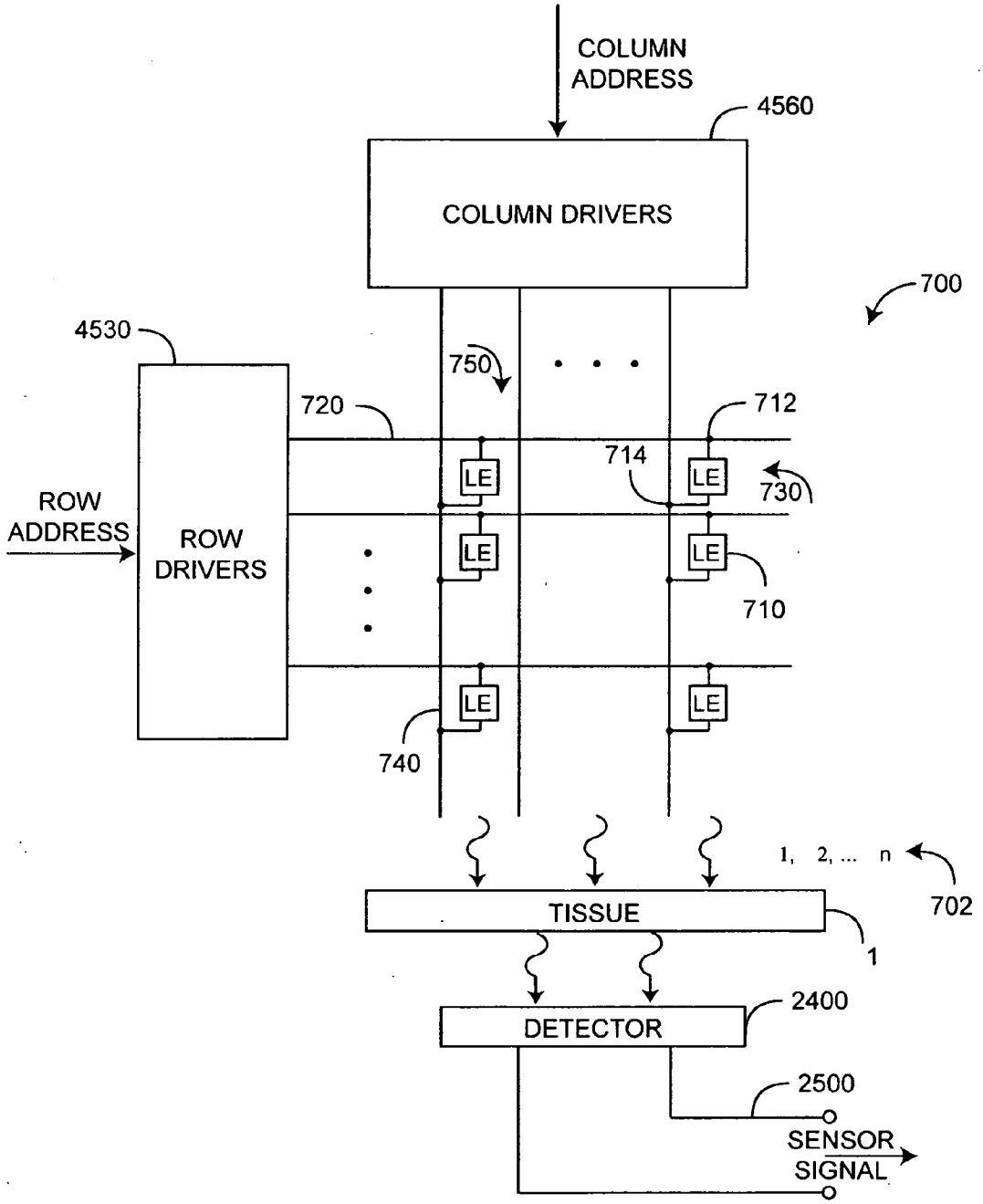
COLUMN ADDRESS
4560
COLUMN DRIVERS
700
4530
750
720
712
714
LE
730
ROW ADDRESS
ROW DRIVERS
710
740
1, 2, ... n
702
TISSUE
1
2400
DETECTOR
2500
SENSOR SIGNAL

FIG. 7

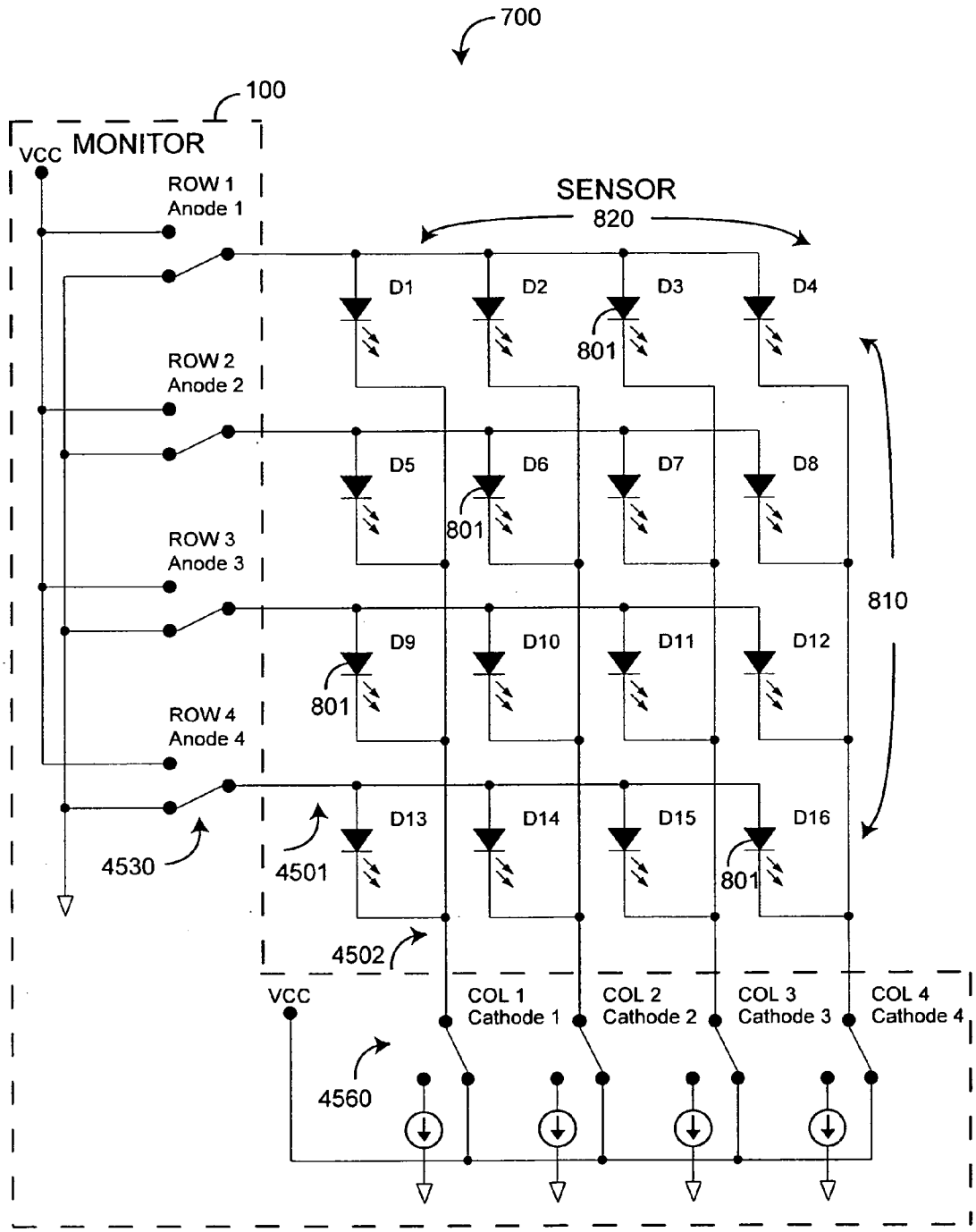
700
100
MONITOR
VCC
ROW 1
Anode 1
ROW 2
Anode 2
ROW 3
Anode 3
ROW 4
Anode 4
SENSOR
820
D1
D2
D3
D4
D5
D6
D7
D8
D9
D10
D11
D12
D13
D14
D15
D16
801
810
4530
4501
4502
4560
VCC
COL 1
Cathode 1
COL 2
Cathode 2
COL 3
Cathode 3
COL 4
Cathode 4

FIG. 8

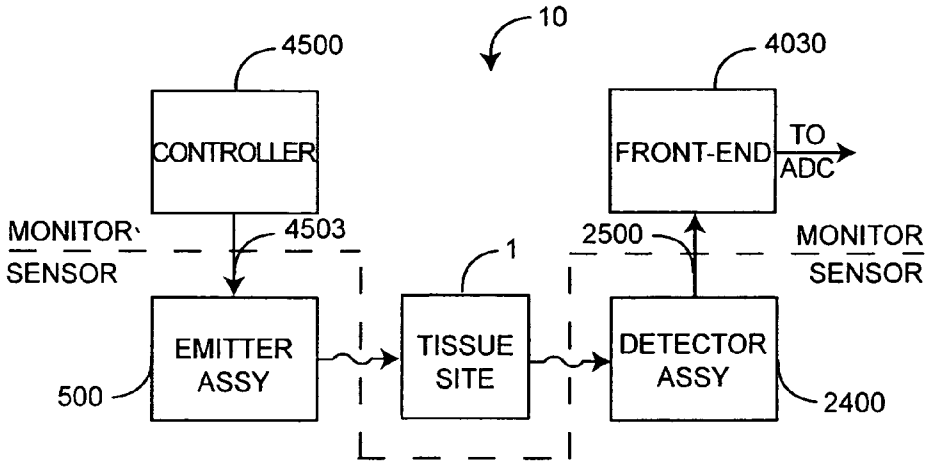
10
4500
CONTROLLER
4030
FRONT-END
TO
ADC
MONITOR
SENSOR
4503
1
2500
MONITOR
SENSOR
EMITTER
ASSY
TISSUE
SITE
DETECTOR
ASSY
500
2400

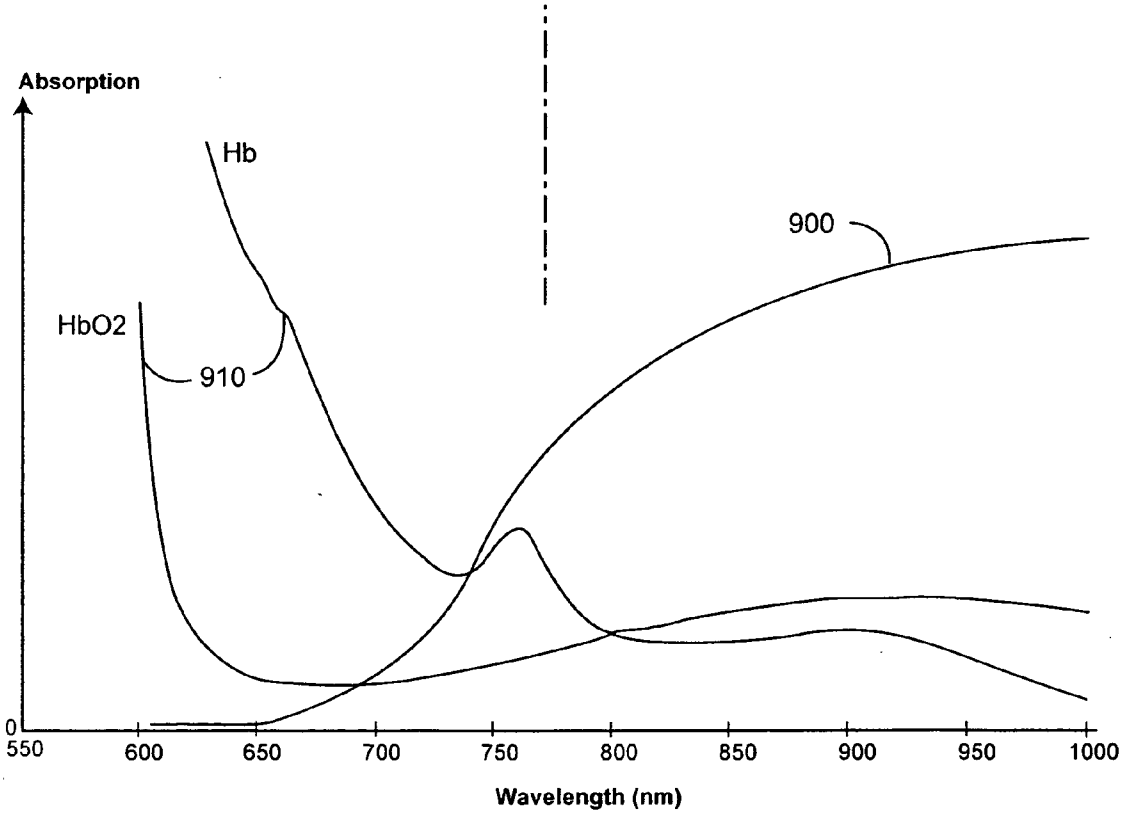
Absorption
Hb
900
HbO2
910
0
550
600
650
700
750
800
850
900
950
1000
Wavelength (nm)

FIG. 9

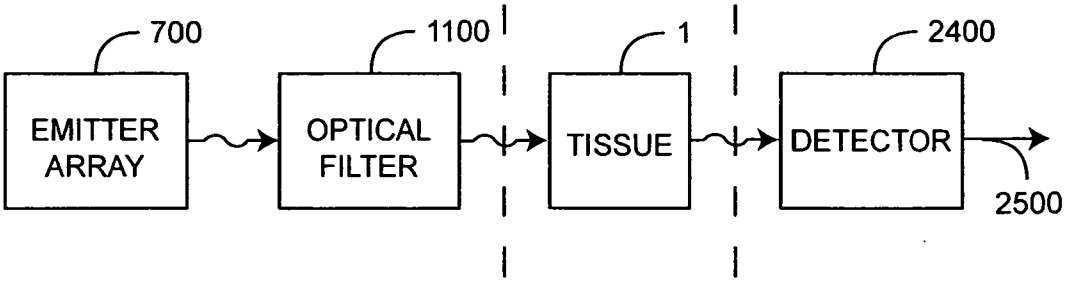

FIG. 10A

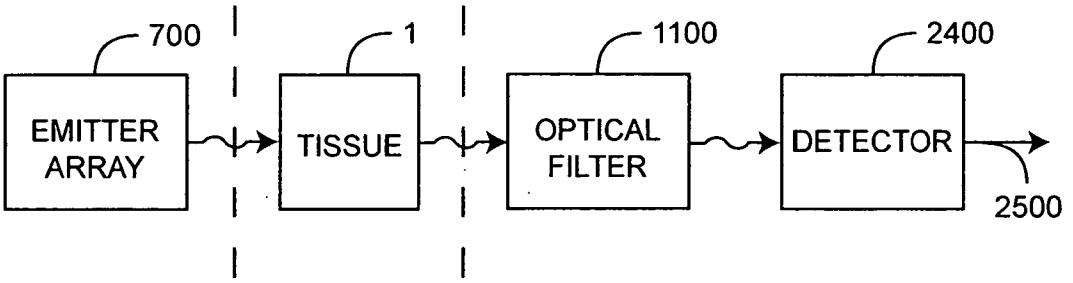

FIG. 10B

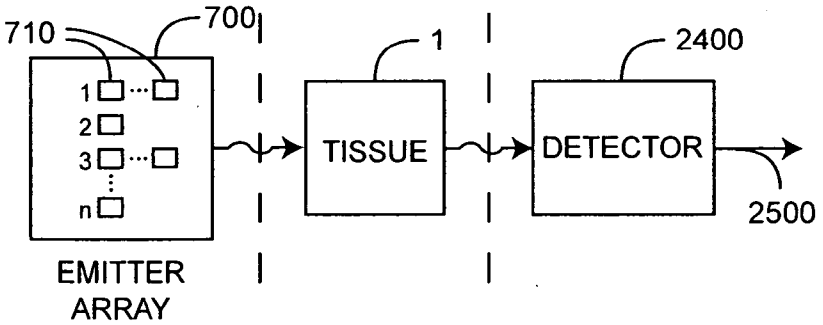

FIG. 10C

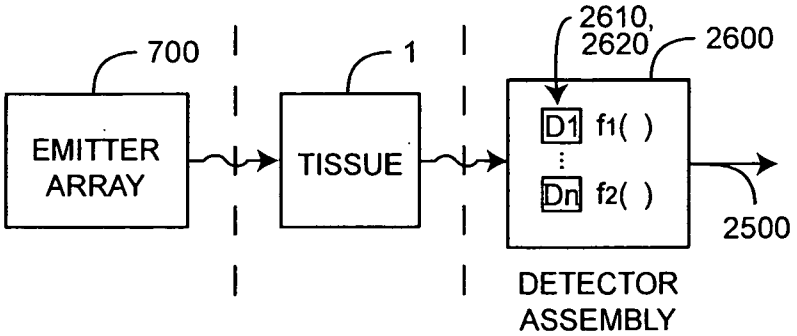

FIG. 10D

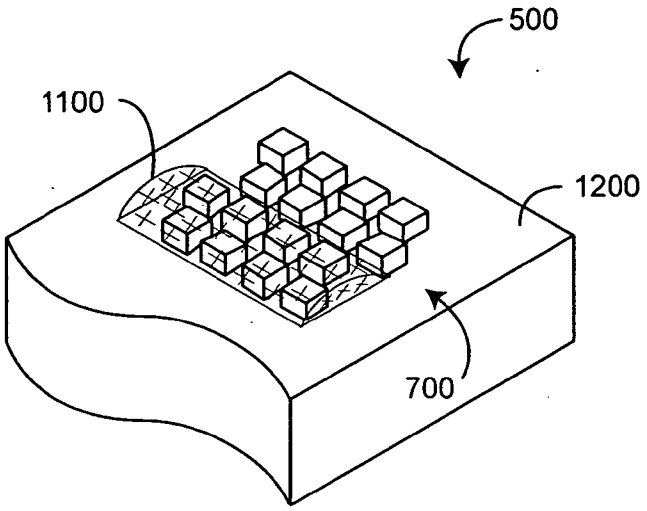

FIG. 11A

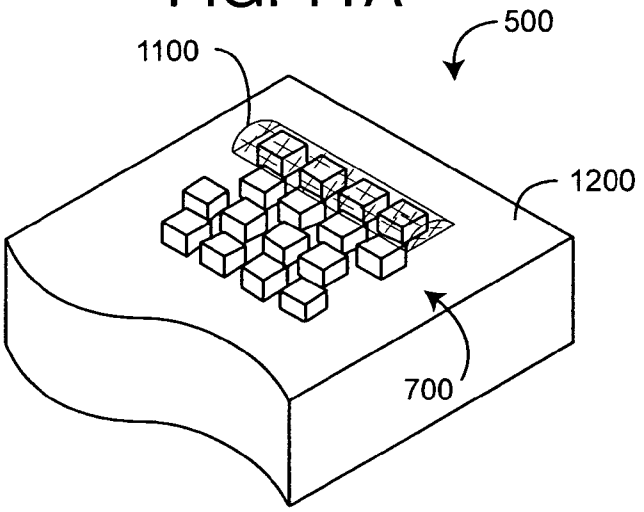

FIG. 11B

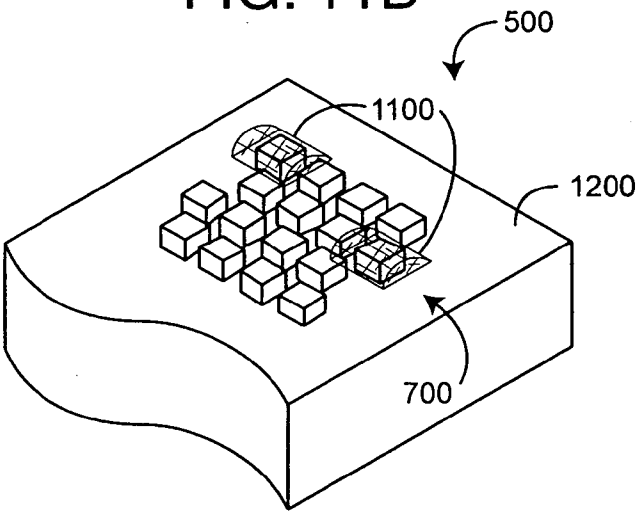

FIG. 11C

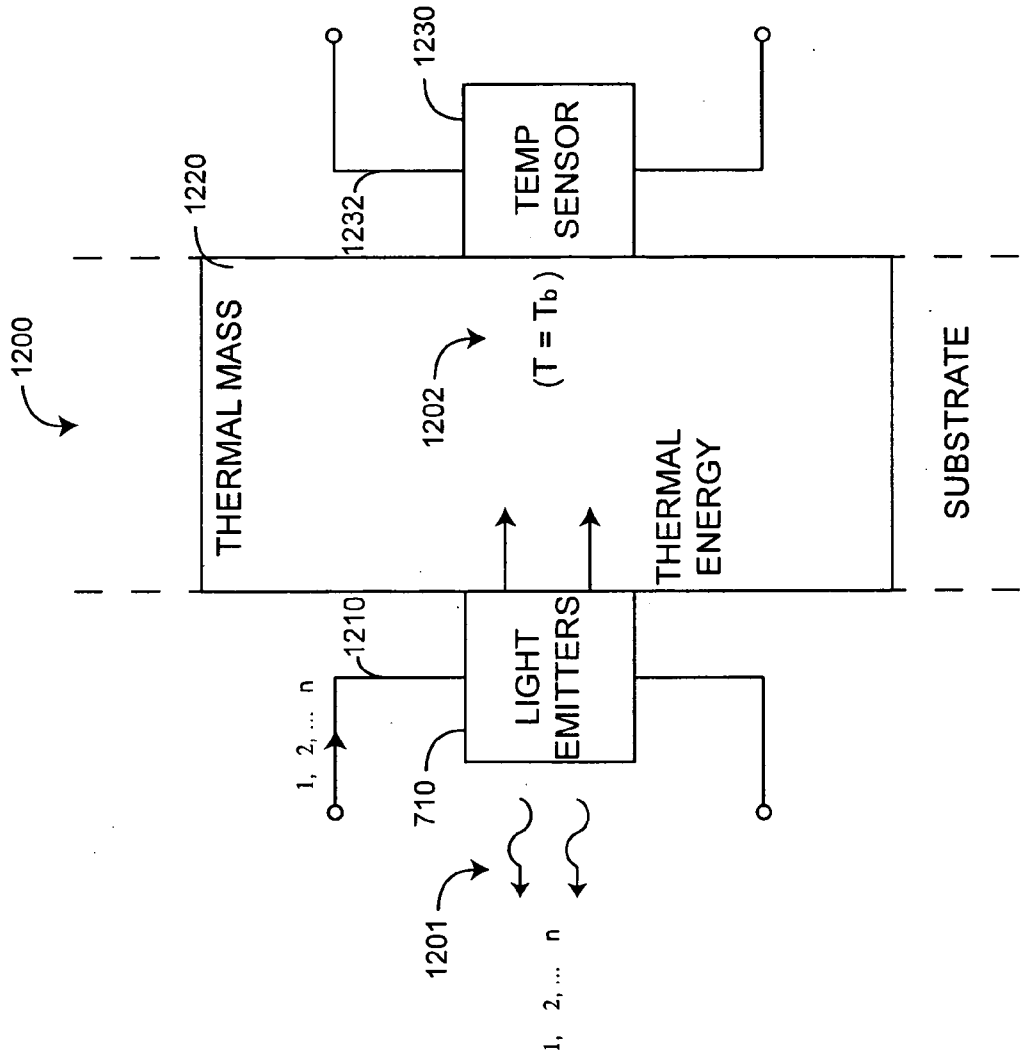
1200
THERMAL MASS
1220
1232
1230
TEMP SENSOR
1202
(T = Tb)
THERMAL ENERGY
SUBSTRATE
1210
1, 2, ... n
LIGHT EMITTERS
710
1201
1, 2, ... n

FIG. 12

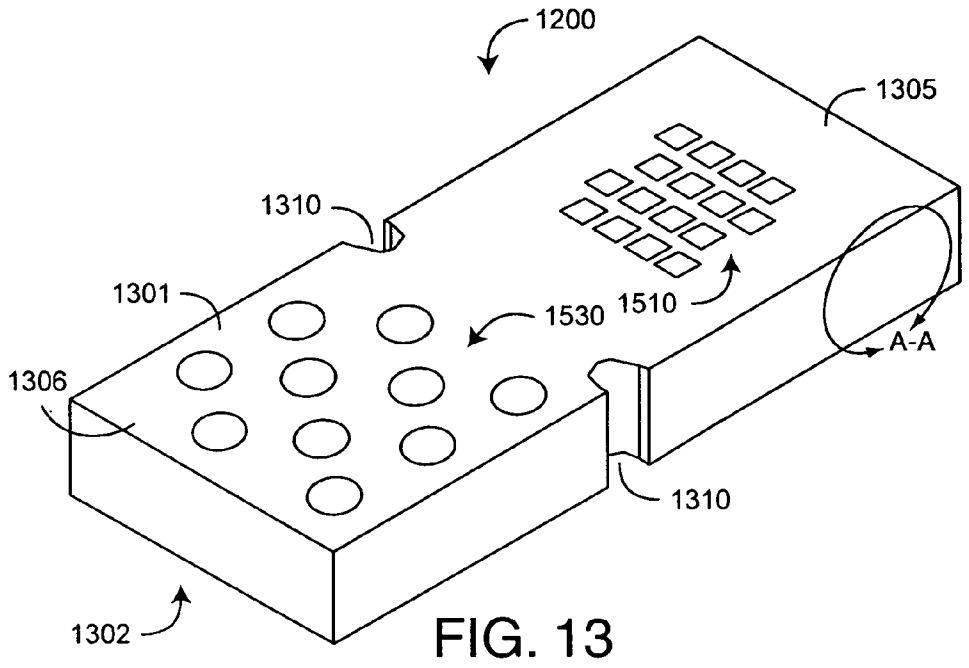
1200
1305
1310
1301
1530
1510
A-A
1306
1310
1302

FIG. 13

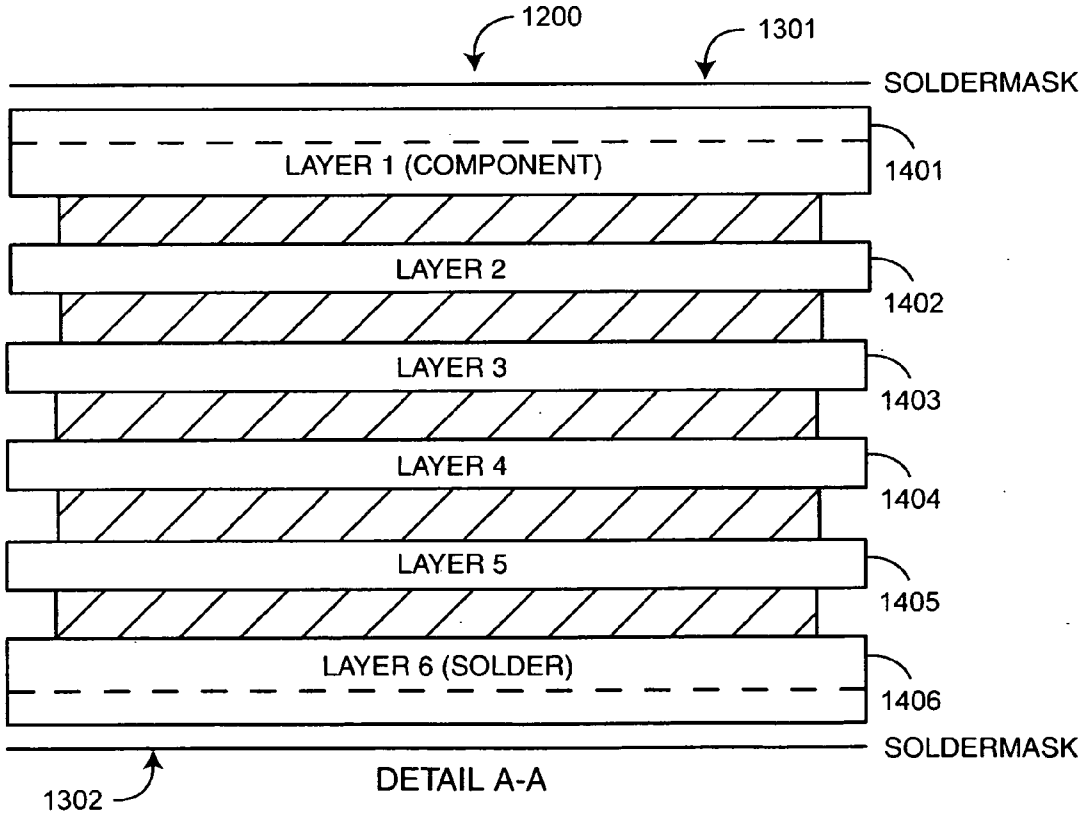
1200
1301
SOLDERMASK
LAYER 1 (COMPONENT)
1401
LAYER 2
1402
LAYER 3
1403
LAYER 4
1404
LAYER 5
1405
LAYER 6 (SOLDER)
1406
SOLDERMASK
1302
DETAIL A-A

FIG. 14

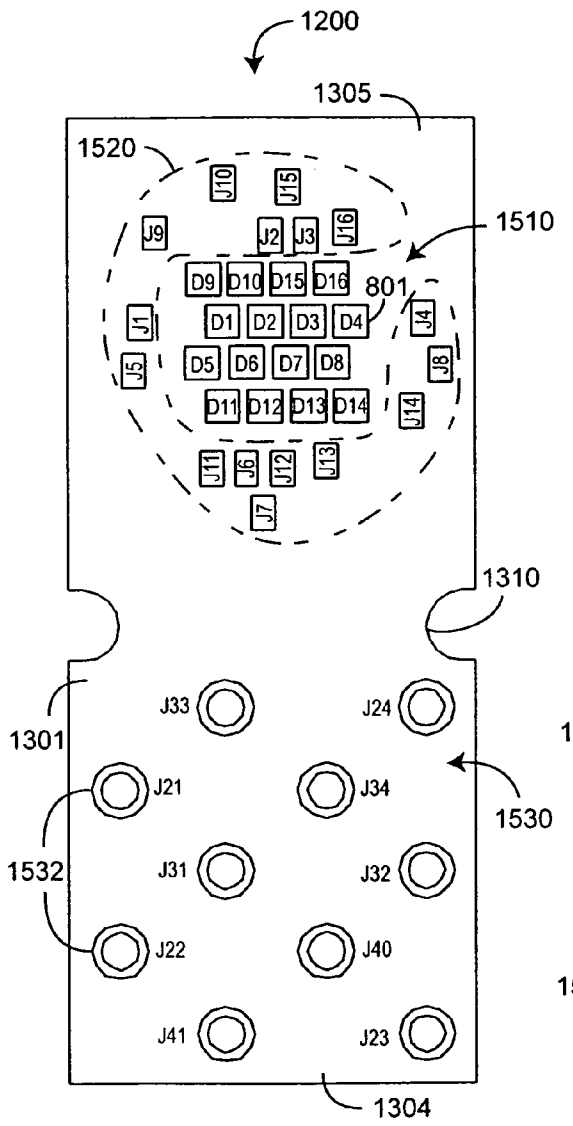
1200
1305
1520
J10
J15
J9
J2
J3
J16
1510
D9
D10
D15
D16
801
J1
D1
D2
D3
D4
J4
J5
D5
D6
D7
D8
J8
D11
D12
D13
D14
J14
J11
J6
J12
J13
J7
1310
1301
J33
J24
J21
J34
1530
1532
J31
J32
J22
J40
J41
J23
1304

FIG. 15

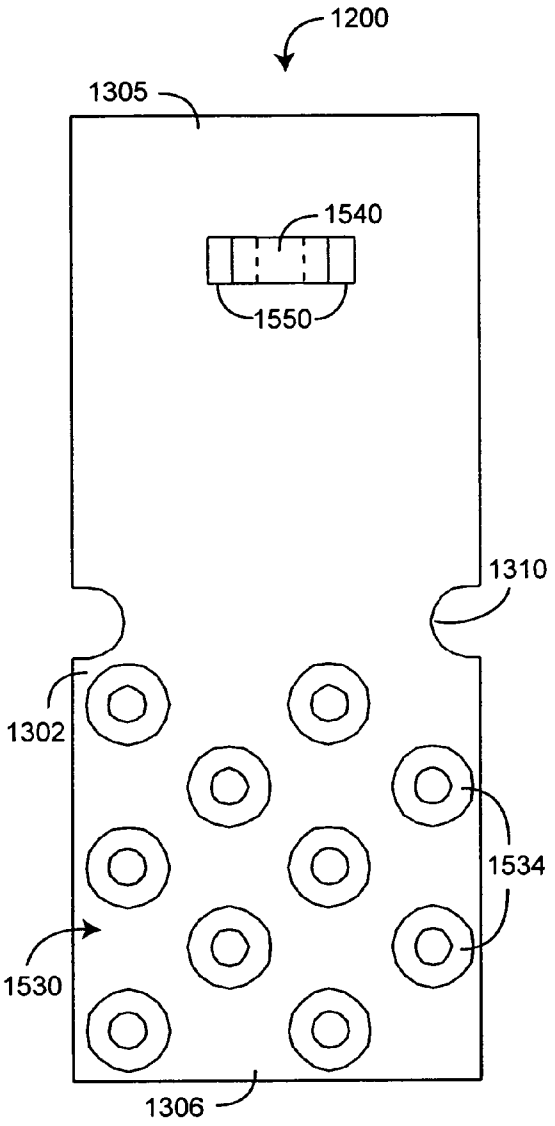
1200
1305
1540
1550
1310
1302
1534
1530
1306

FIG. 16

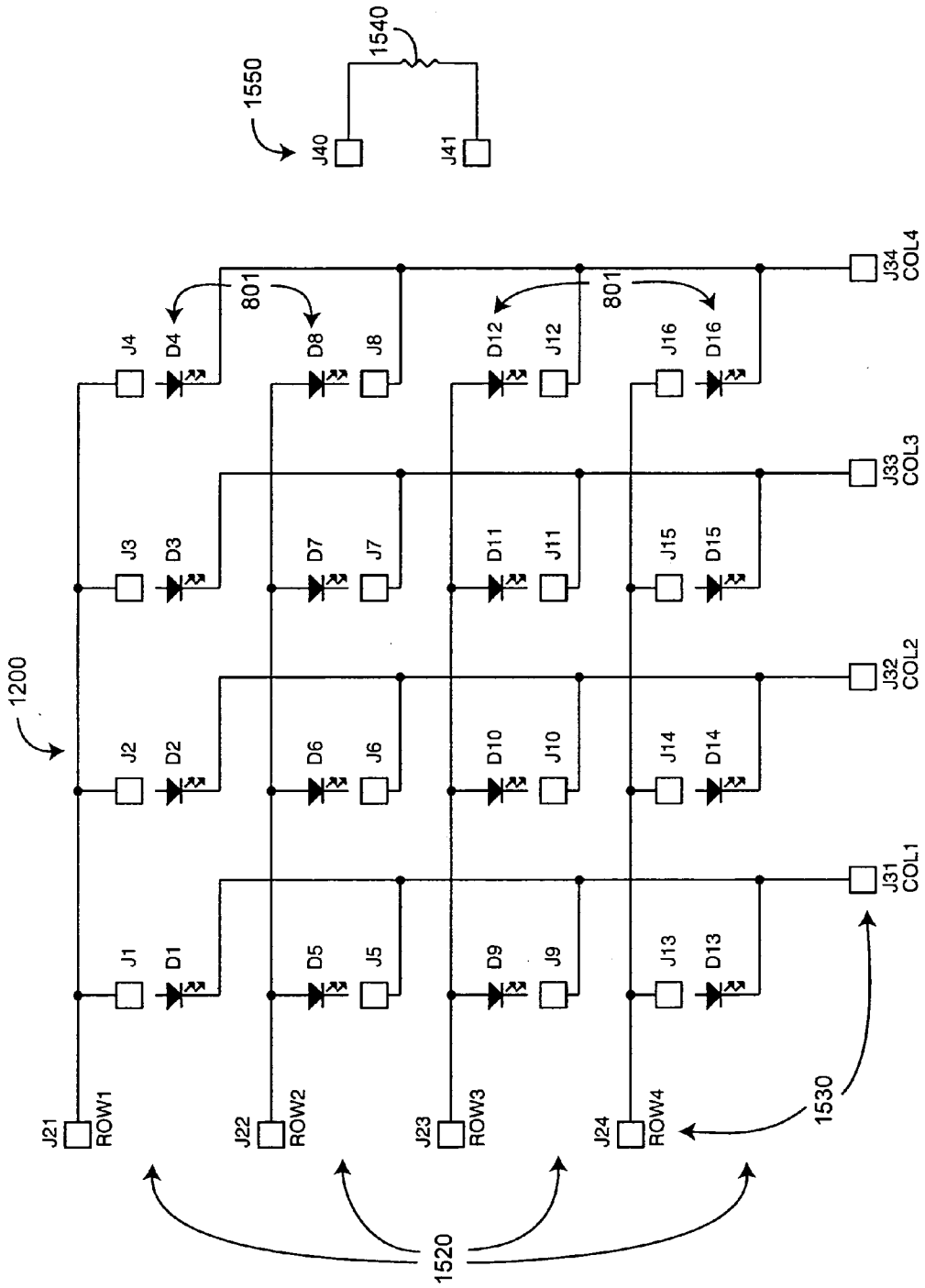
1550
J40
J41
1540
1200
J21
ROW1
J22
ROW2
J23
ROW3
J24
ROW4
J1
D1
J2
D2
J3
D3
J4
D4
J5
D5
J6
D6
J7
D7
J8
D8
J9
D9
J10
D10
J11
D11
J12
D12
J13
D13
J14
D14
J15
D15
J16
D16
801
801
J31
COL1
J32
COL2
J33
COL3
J34
COL4
1520
1530

FIG. 17

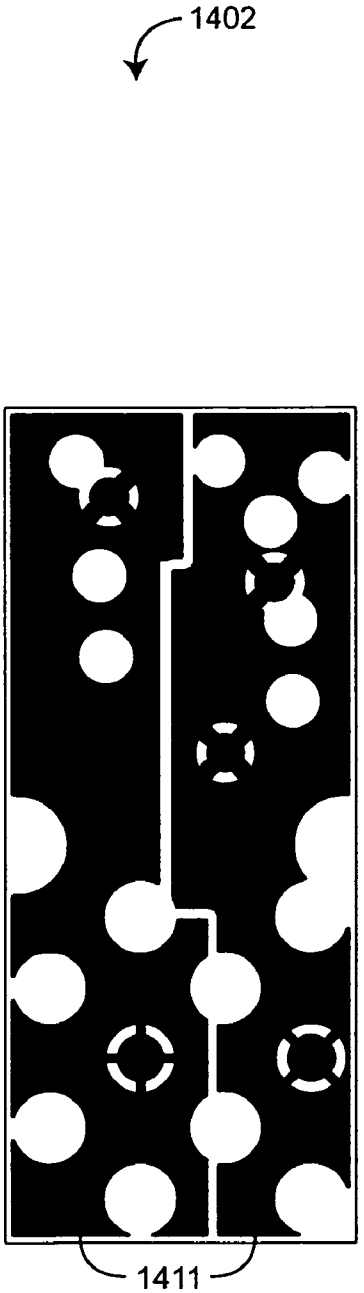

FIG. 18

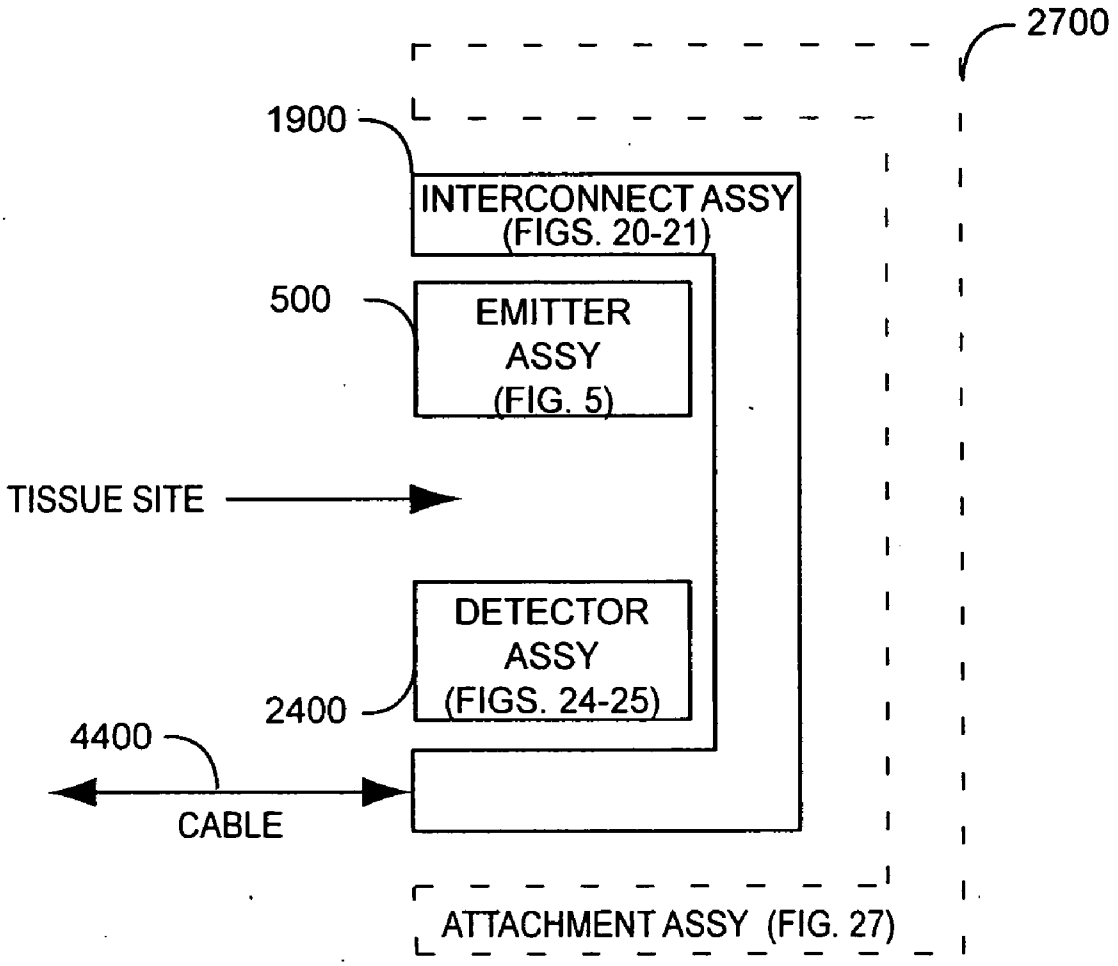
2700
1900
INTERCONNECT ASSY
(FIGS. 20-21)
500
EMITTER
ASSY
(FIG. 5)
TISSUE SITE
DETECTOR
ASSY
(FIGS. 24-25)
2400
4400
CABLE
ATTACHMENT ASSY (FIG. 27)

FIG. 19

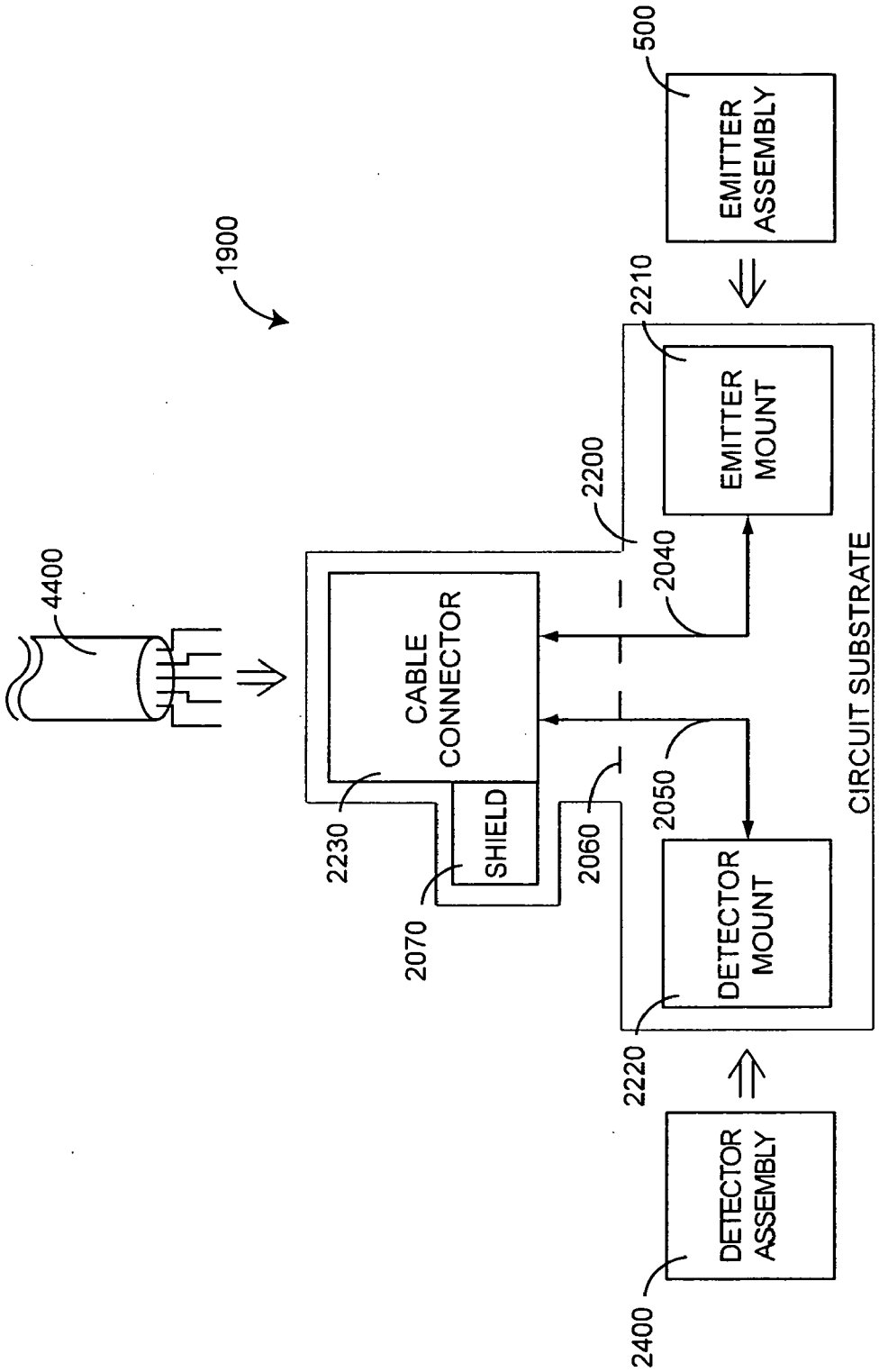
1900
4400
CABLE CONNECTOR
SHIELD
2230
2070
2200
2040
2060
2050
2210
EMITTER MOUNT
DETECTOR MOUNT
2220
CIRCUIT SUBSTRATE
500
EMITTER ASSEMBLY
DETECTOR ASSEMBLY
2400

FIG. 20

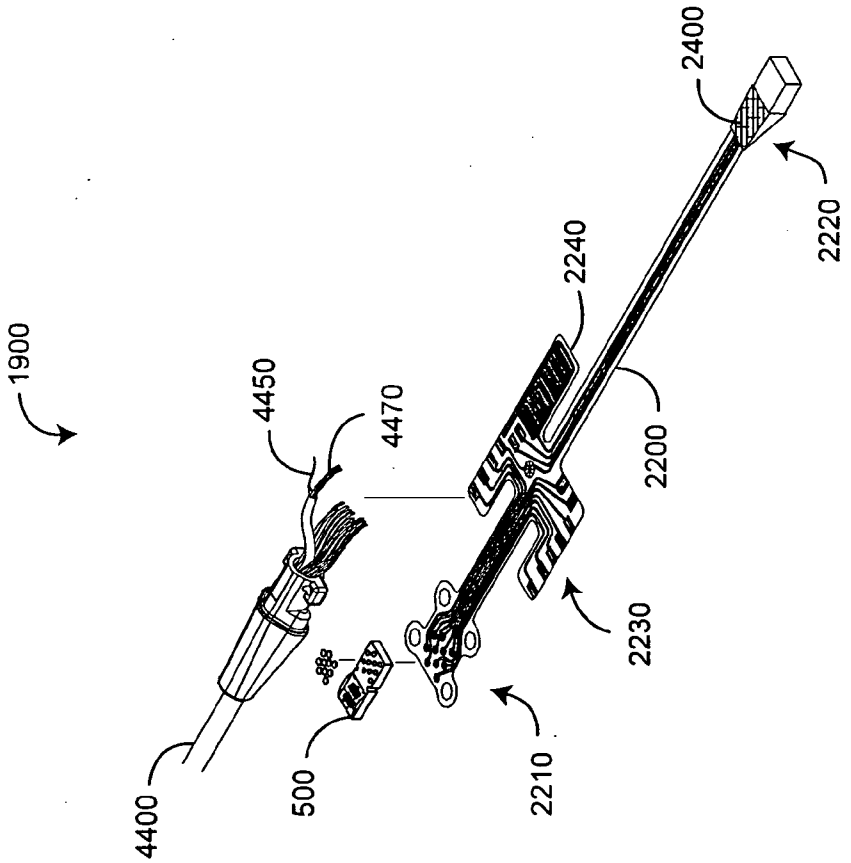

FIG. 21

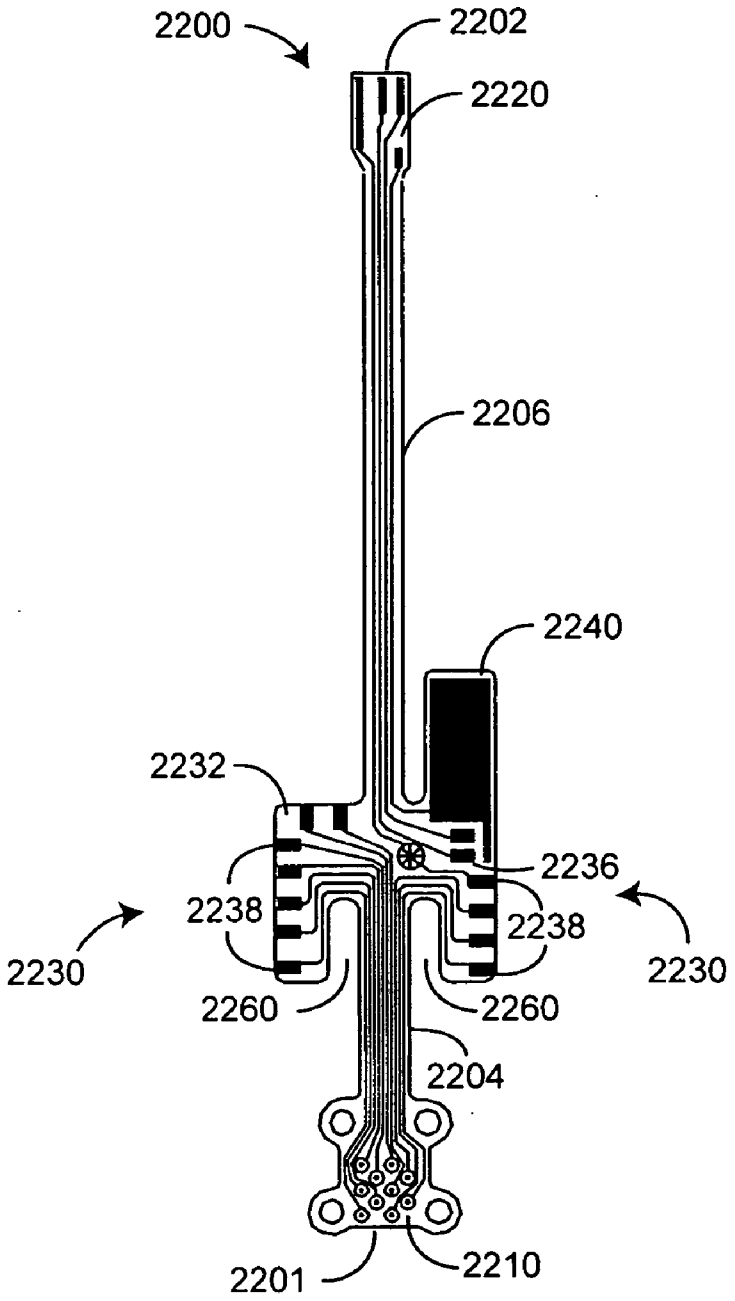
2200
2202
2220
2206
2240
2232
2236
2238
2238
2230
2230
2260
2260
2204
2201
2210

FIG. 22

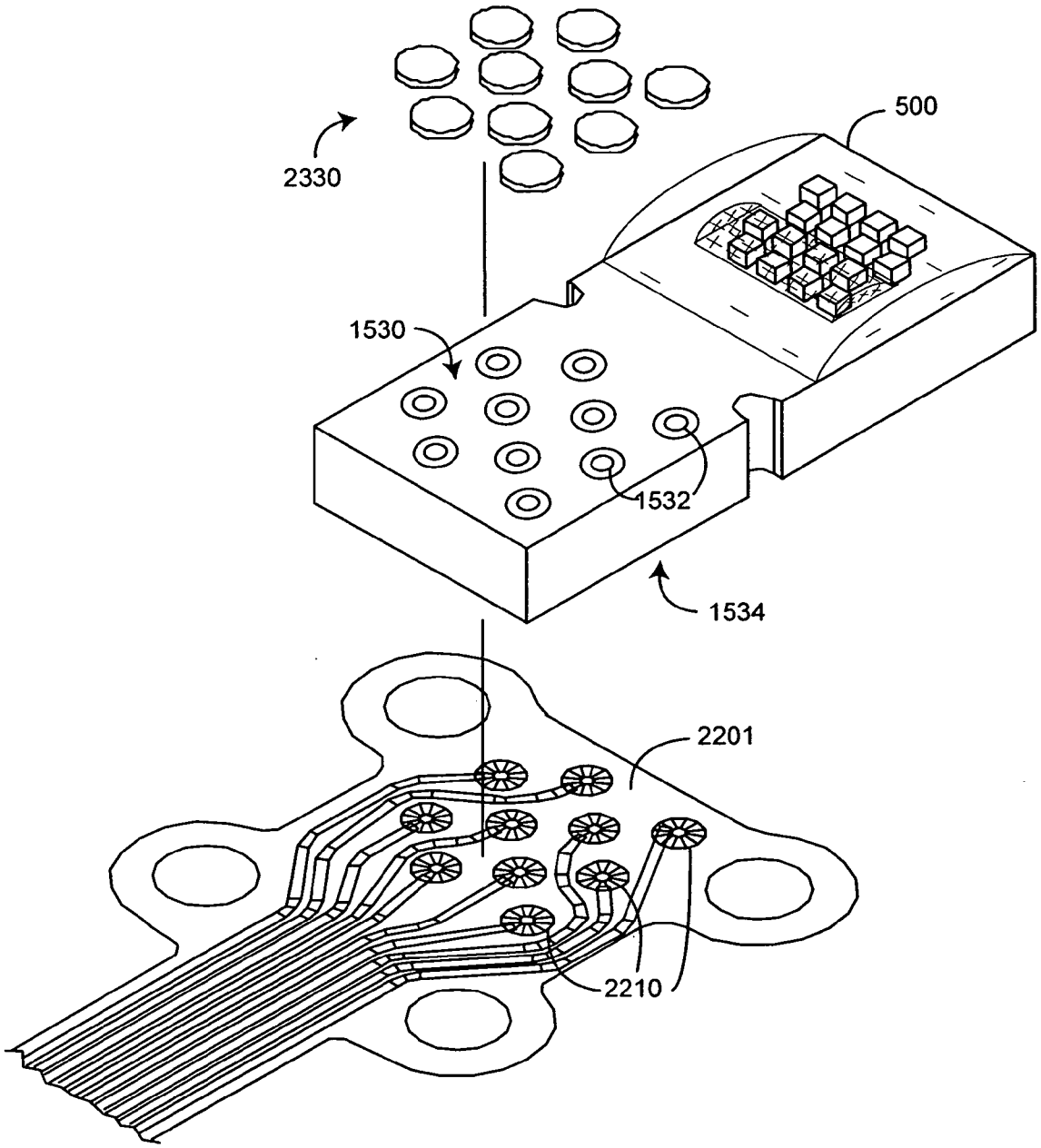

FIG. 23

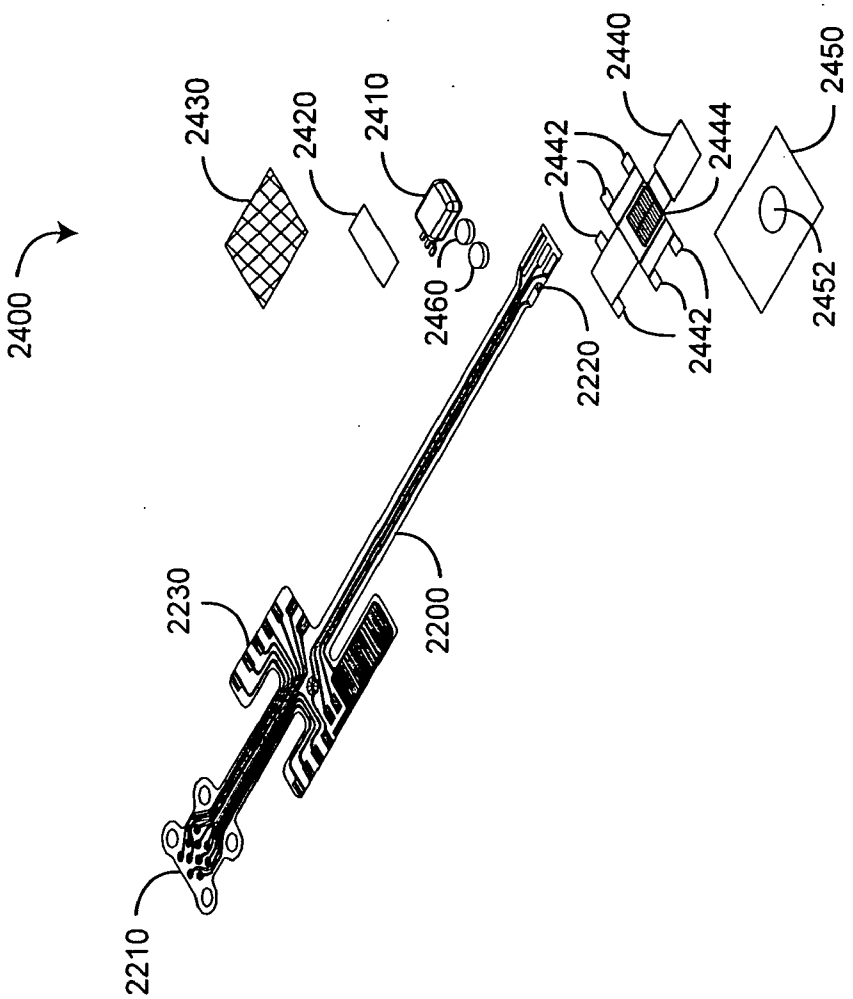
2400
2430
2420
2410
2460
2440
2442
2444
2450
2452
2442
2220
2230
2200
2210

FIG. 24

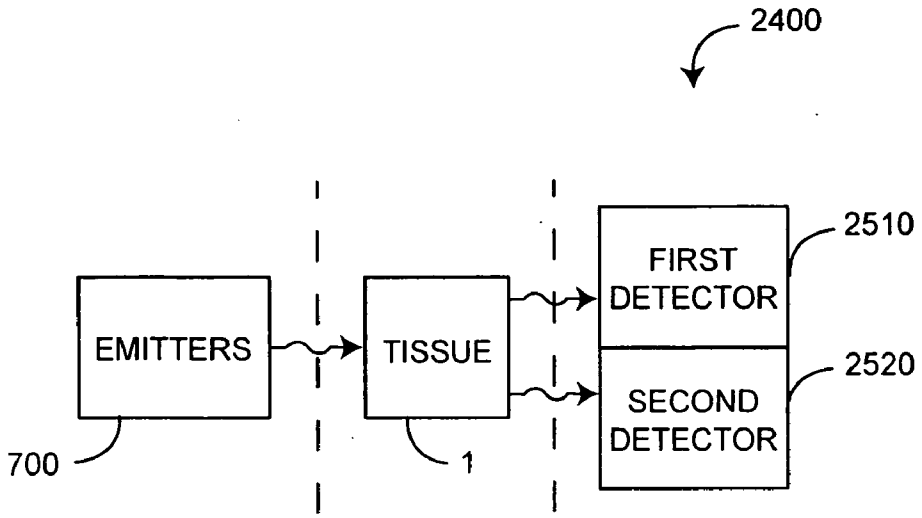
2400
EMITTERS
TISSUE
FIRST DETECTOR
SECOND DETECTOR
2510
2520
700
1

FIG. 25

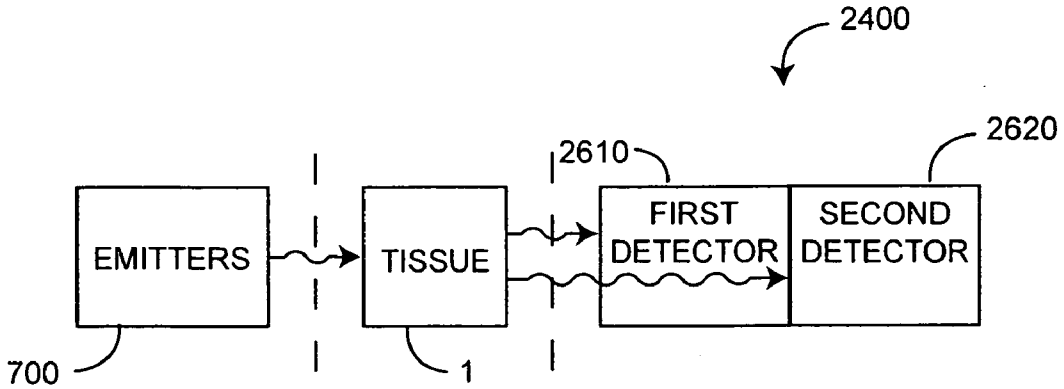
2400
2610
2620
EMITTERS
TISSUE
FIRST DETECTOR
SECOND DETECTOR
700
1

FIG. 26

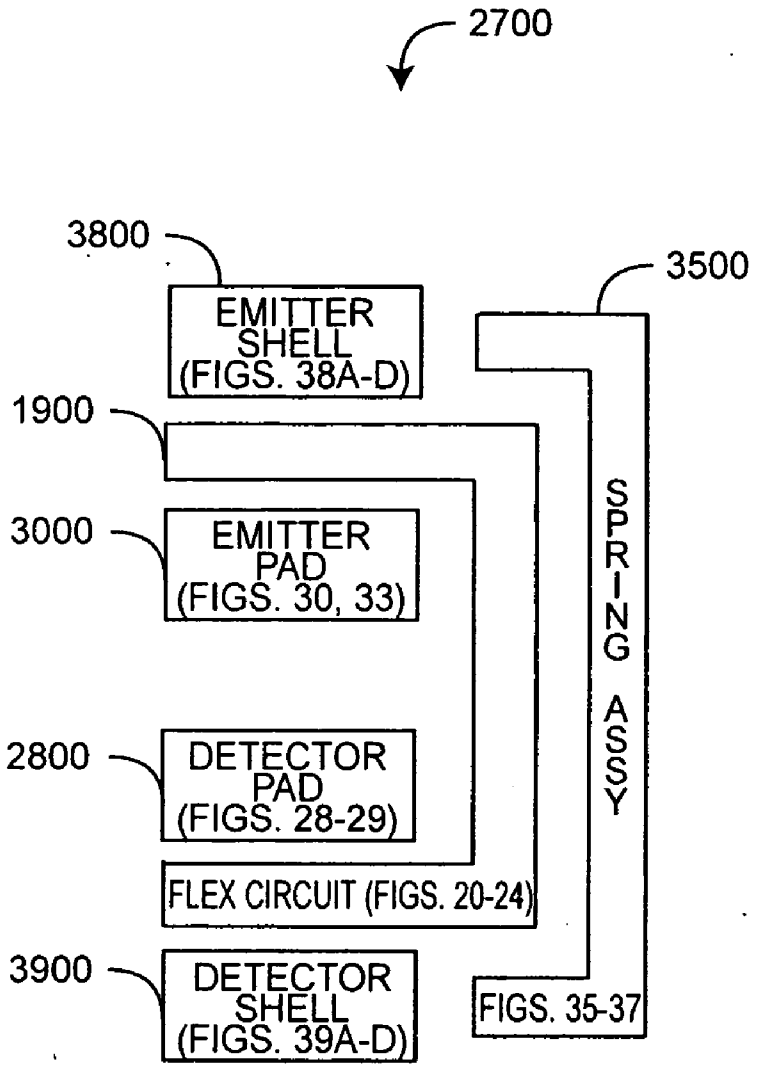
2700
3800
EMITTER SHELL (FIGS. 38A-D)
3500
1900
3000
EMITTER PAD (FIGS. 30, 33)
SPRING ASSY
2800
DETECTOR PAD (FIGS. 28-29)
FLEX CIRCUIT (FIGS. 20-24)
3900
DETECTOR SHELL (FIGS. 39A-D)
FIGS. 35-37

FIG. 27

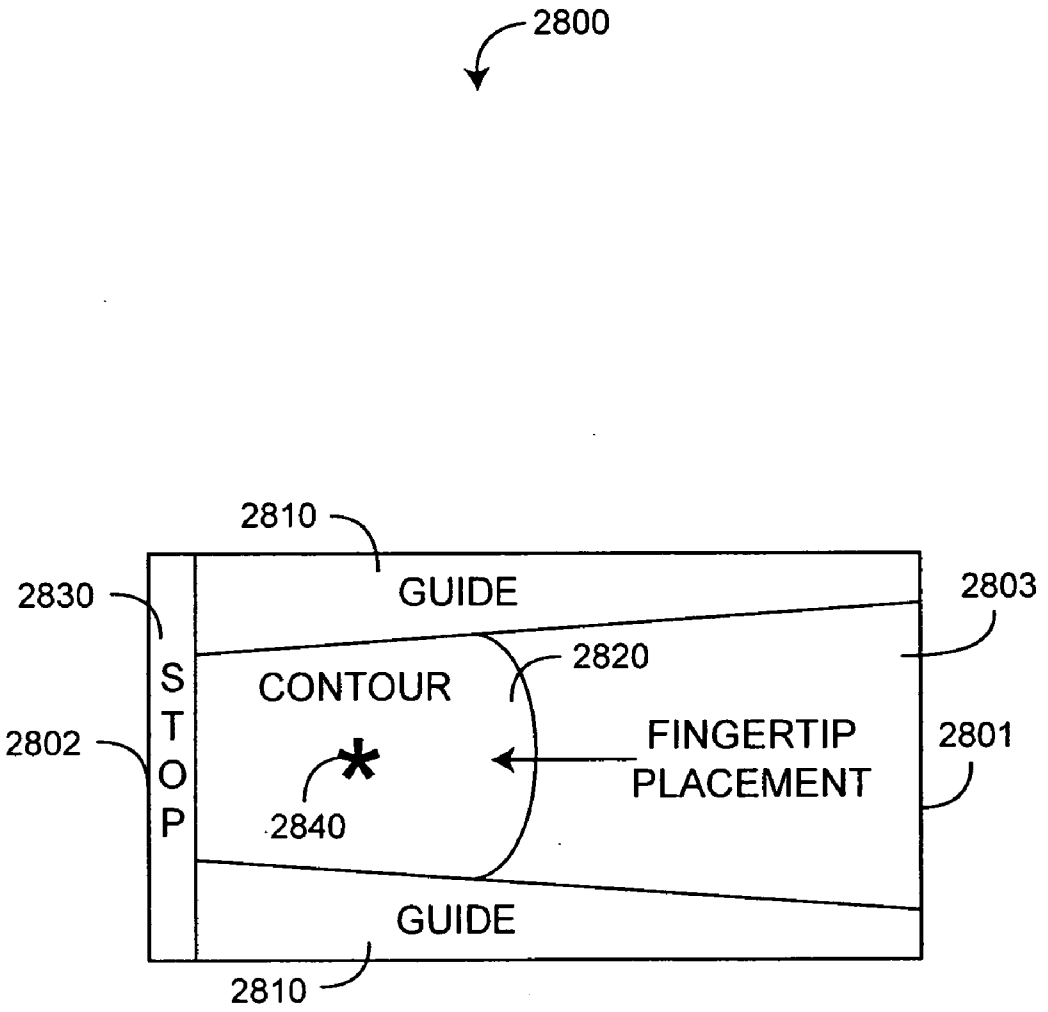
2800
2810
GUIDE
2830
2803
2820
S
T
O
P
CONTOUR
2802
FINGERTIP
PLACEMENT
2801
2840
GUIDE
2810

FIG. 28

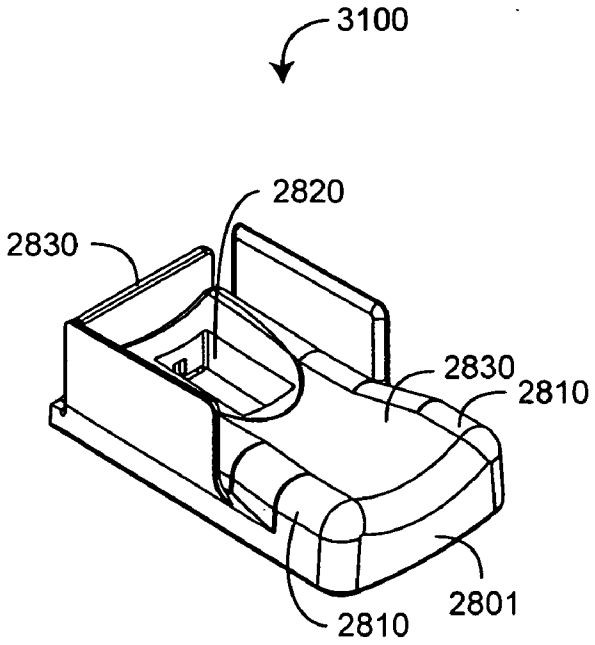

FIG. 29A

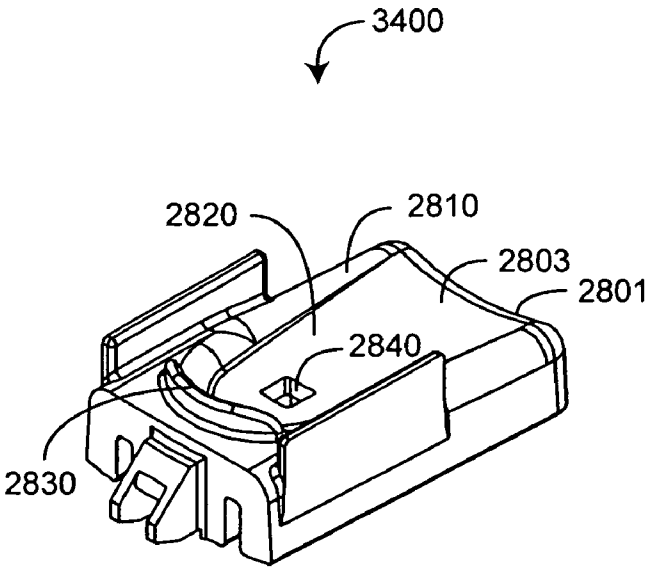

FIG. 29B

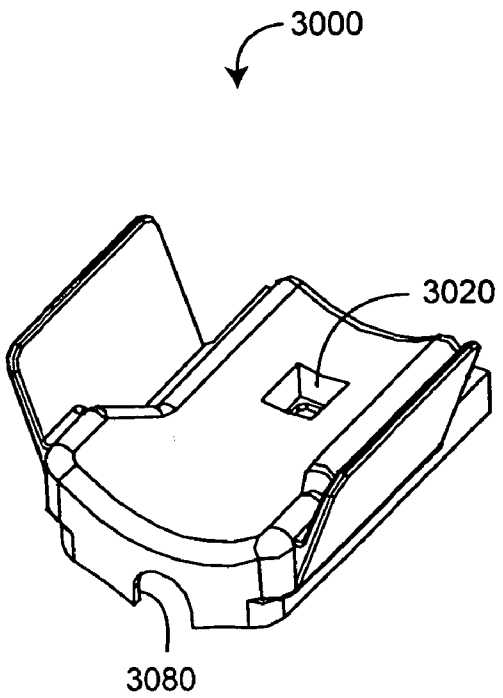

FIG. 30A

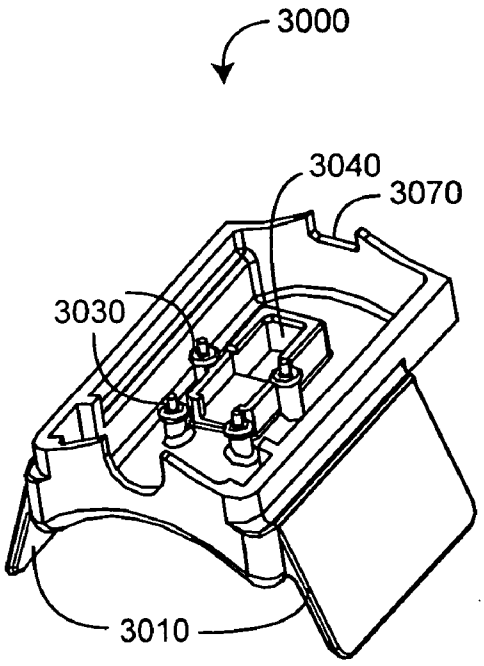

FIG. 30B

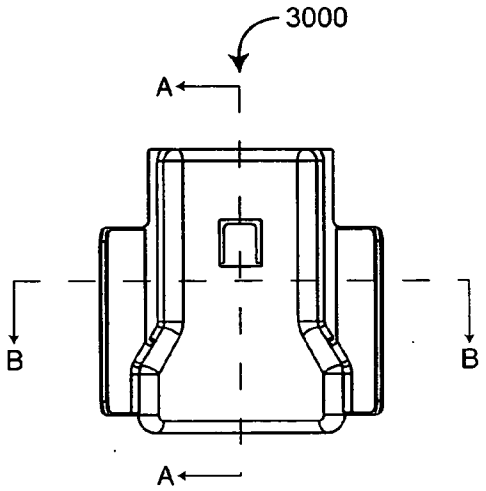

FIG. 30C

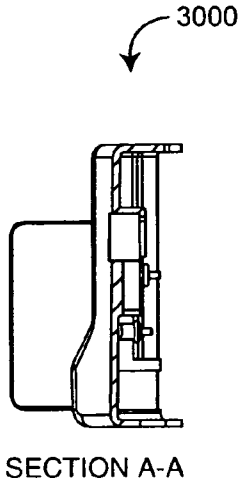

FIG. 30F

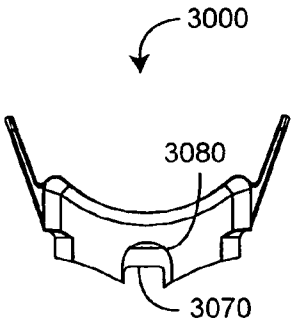

FIG. 30D

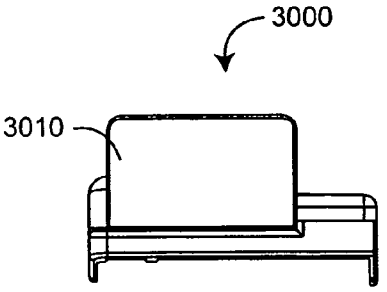

FIG. 30G

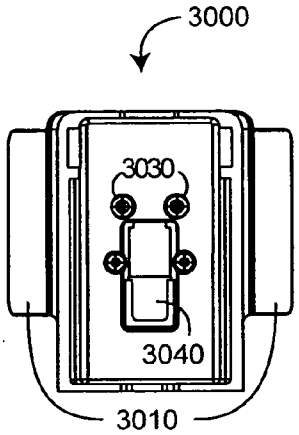

FIG. 30E

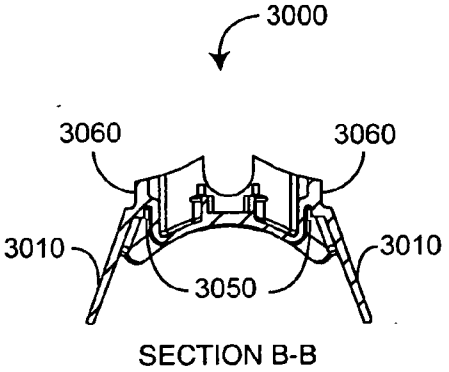

FIG. 30H

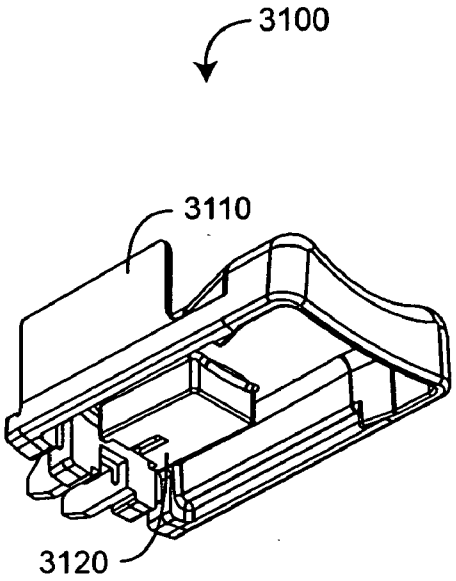

FIG. 31A

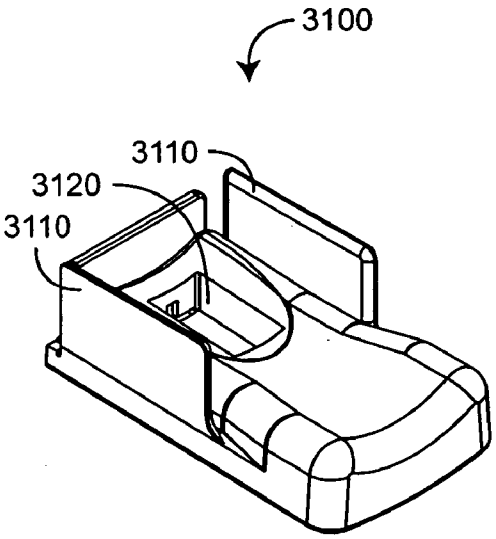

FIG. 31B

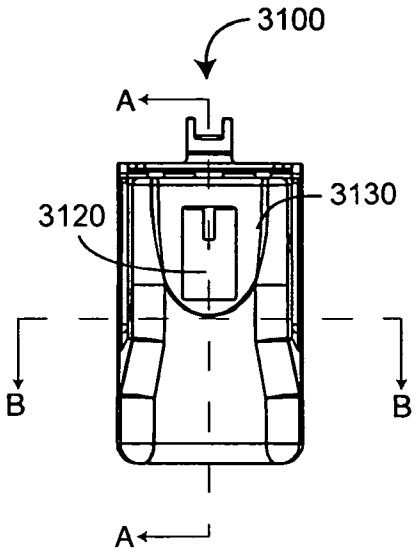

FIG. 31C

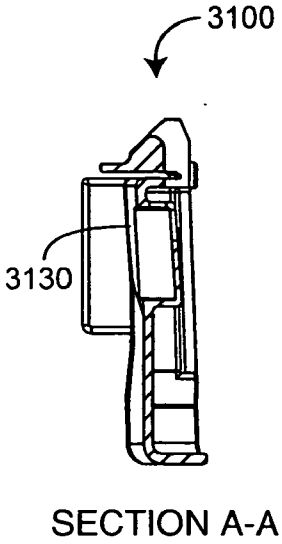

FIG. 31F

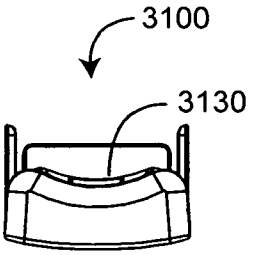

FIG. 31D

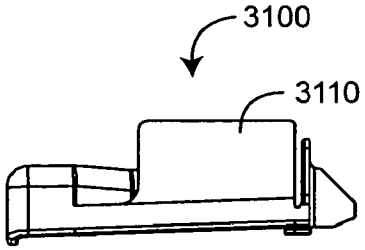

FIG. 31G

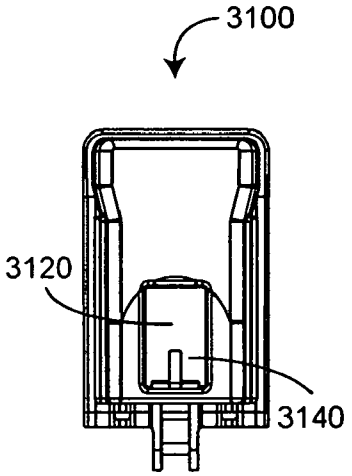

FIG. 31E

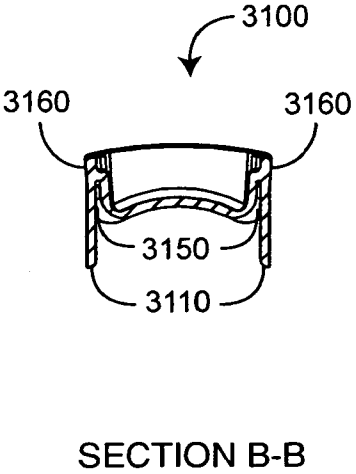

FIG. 31H

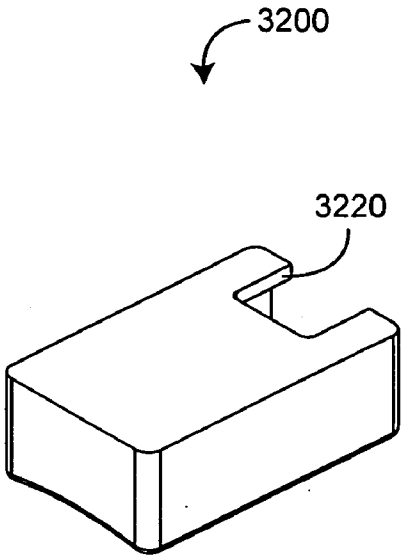

FIG. 32A

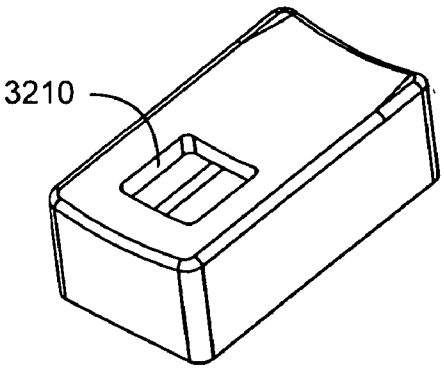

FIG. 32B

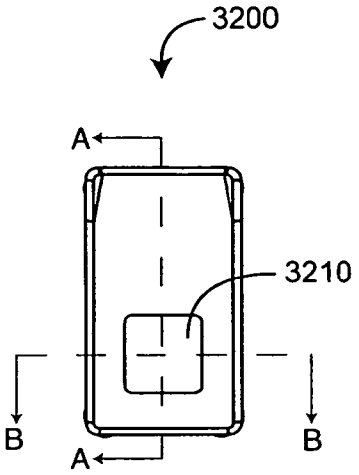

FIG. 32C

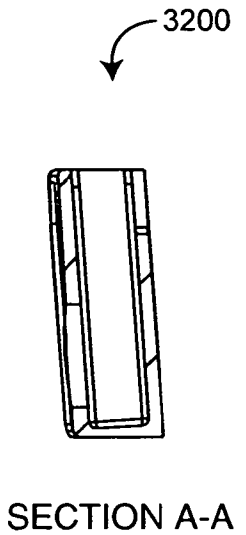

FIG. 32F

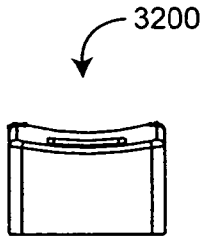

FIG. 32D

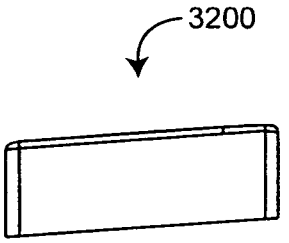

FIG. 32G

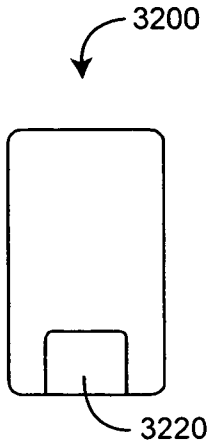

FIG. 32E

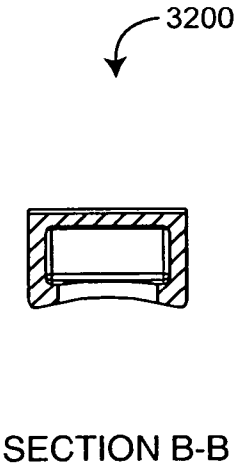

FIG. 32H

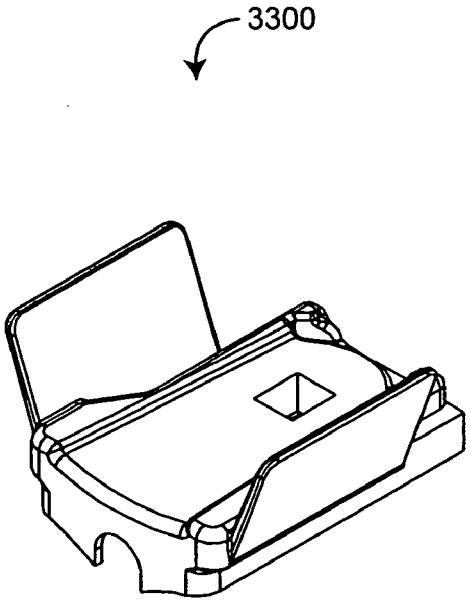

FIG. 33A

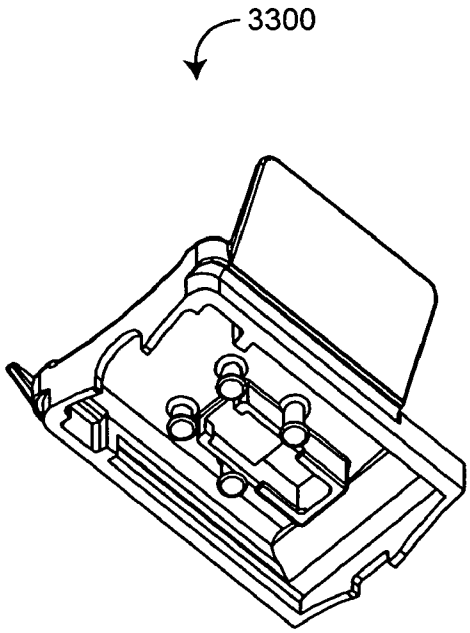

FIG. 33B

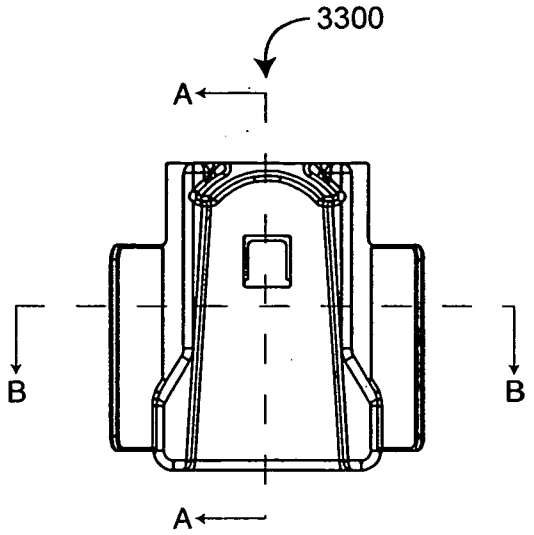

FIG. 33C

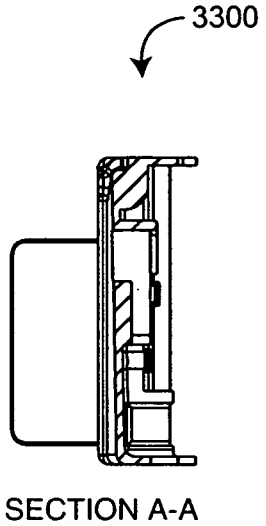

FIG. 33F

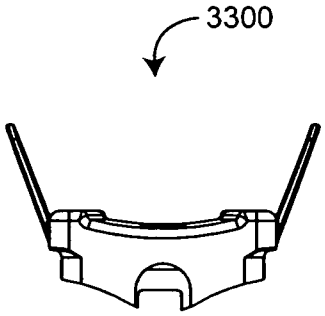

FIG. 33D

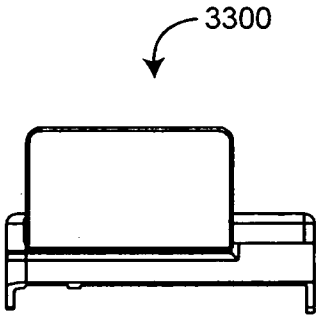

FIG. 33G

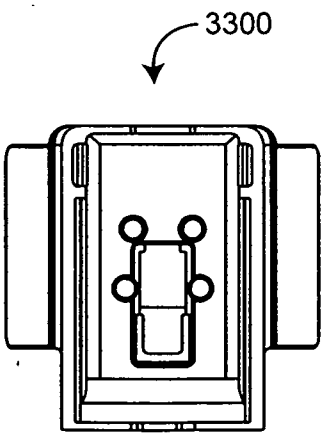

FIG. 33E

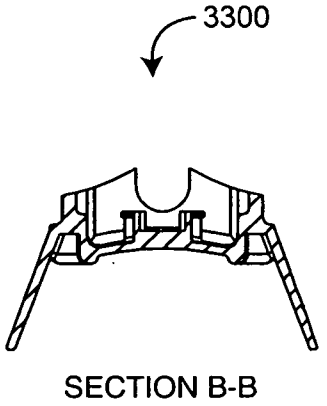

FIG. 33H

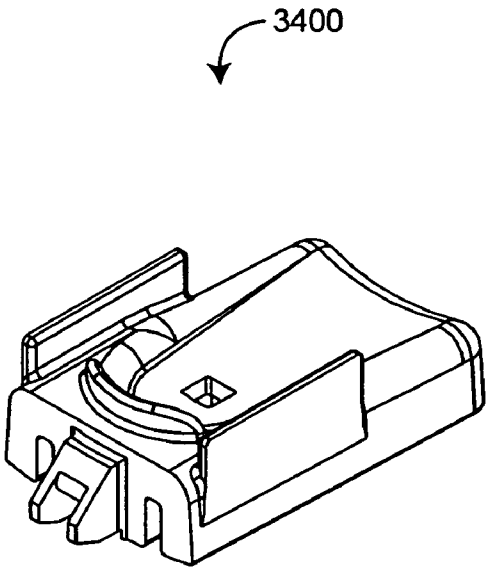

FIG. 34A

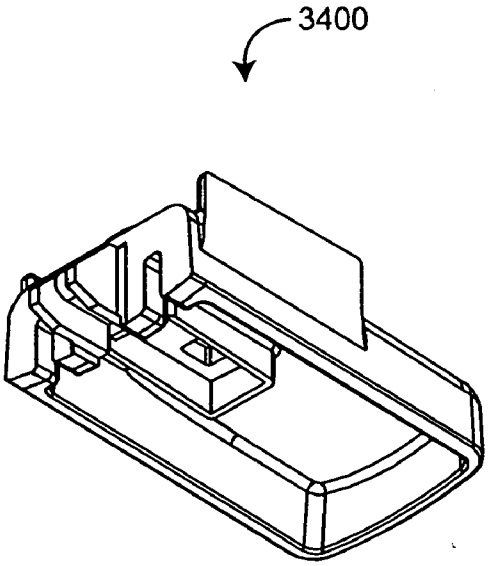

FIG. 34B

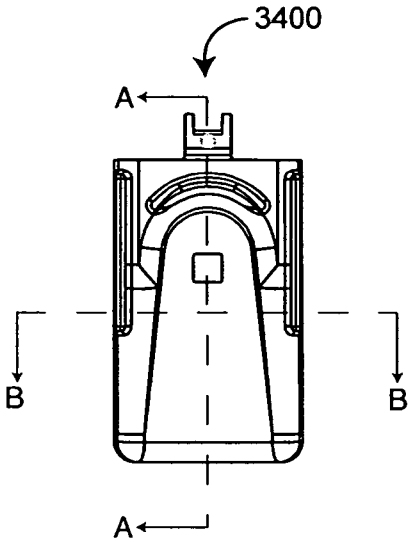

FIG. 34C

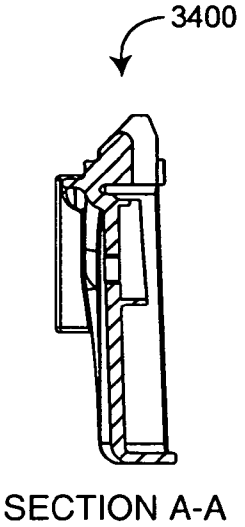

FIG. 34F

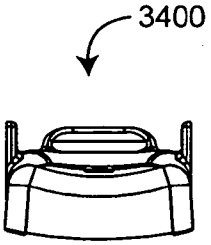

FIG. 34D

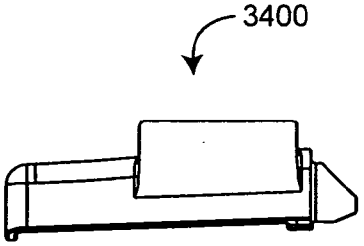

FIG. 34G

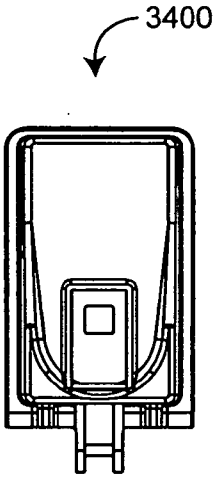

FIG. 34E

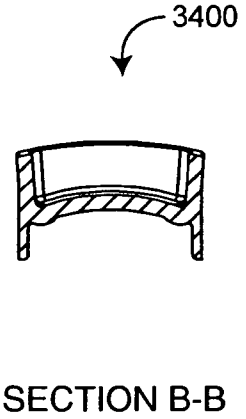

FIG. 34H

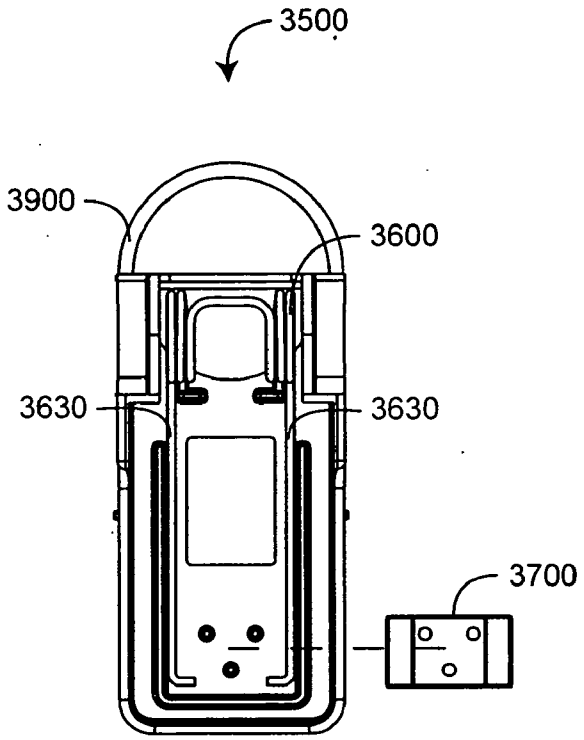

FIG. 35A

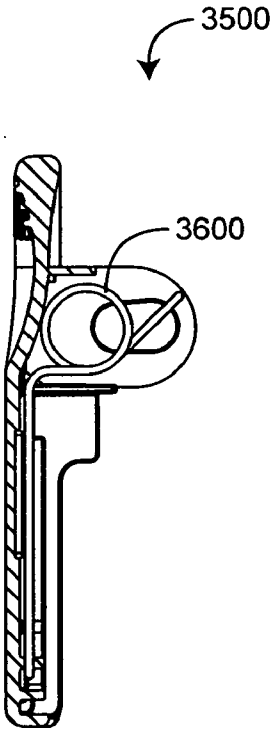

FIG. 35B

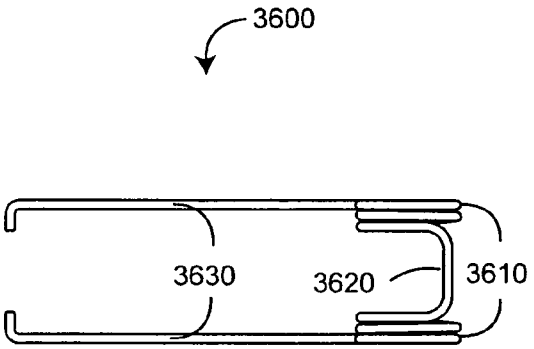

FIG. 36A

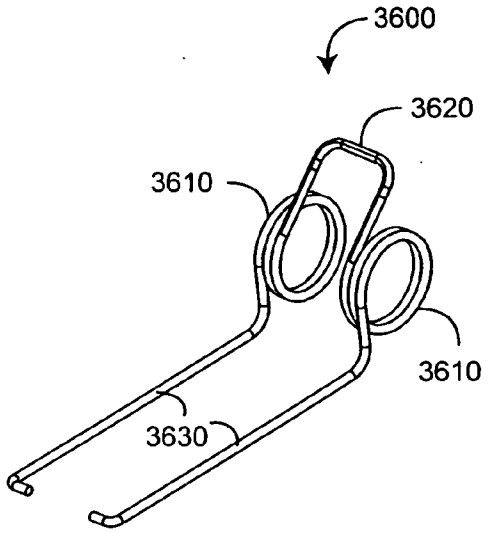

FIG. 36B

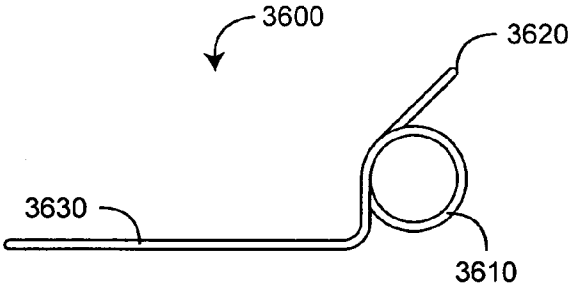

FIG. 36C

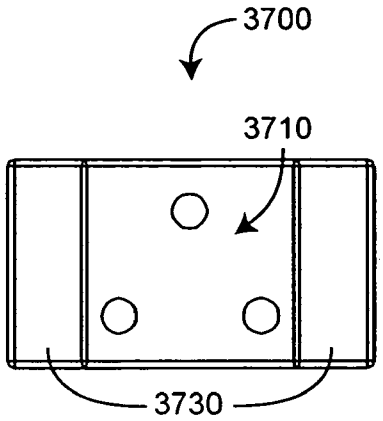

FIG. 37A

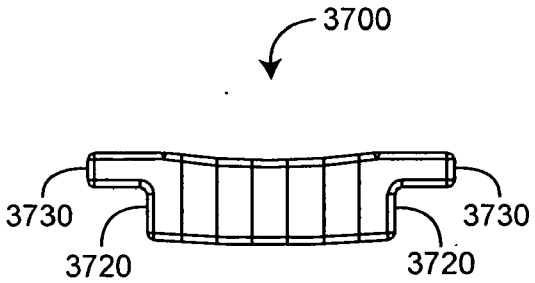

FIG. 37B

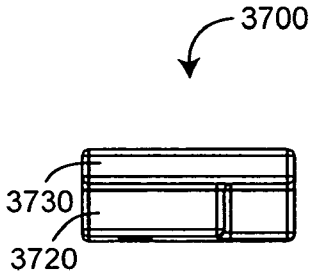

FIG. 37D

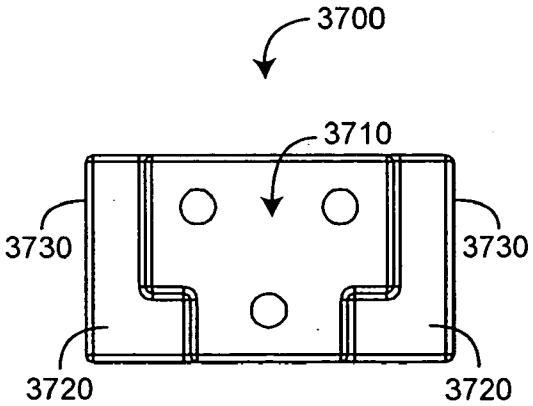

FIG. 37C

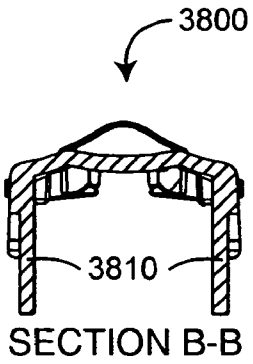

FIG. 38A

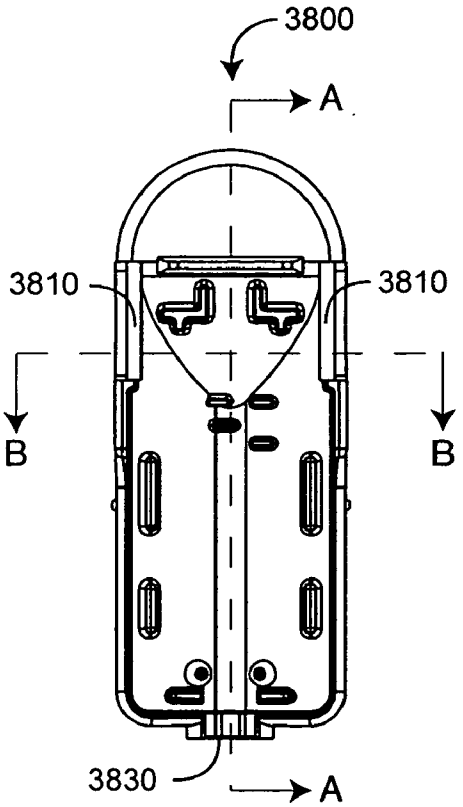

FIG. 38B

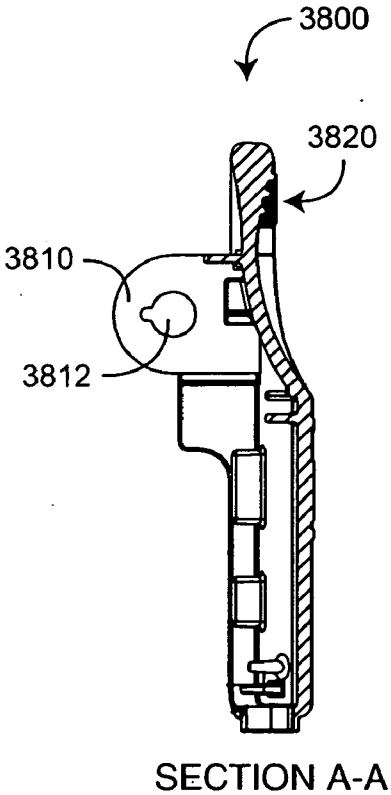

FIG. 38D

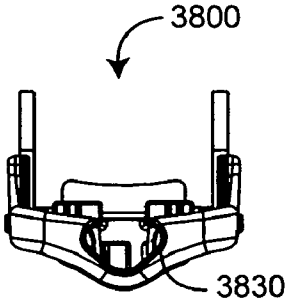

FIG. 38C

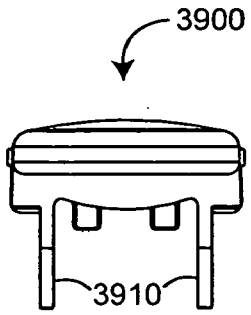

FIG. 39A

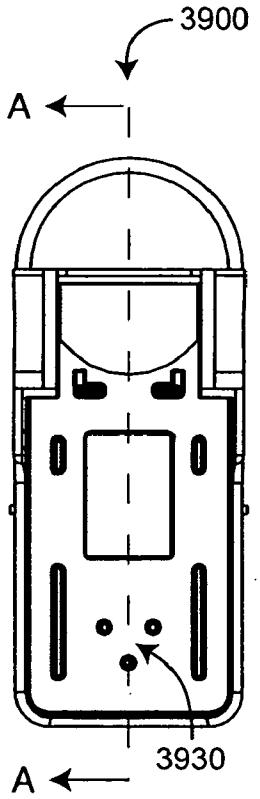

FIG.39B

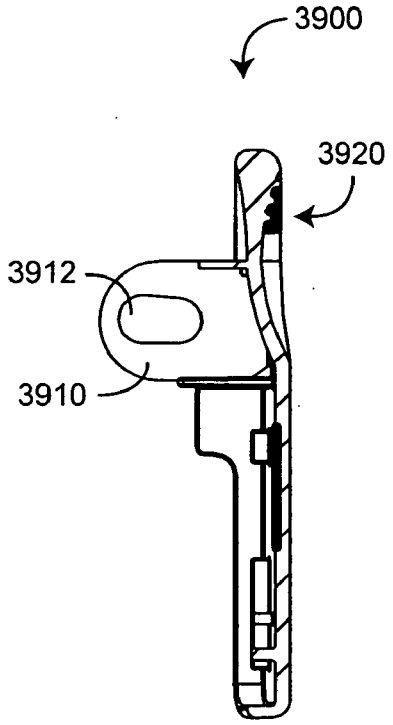

SECTION A-A

FIG. 39D

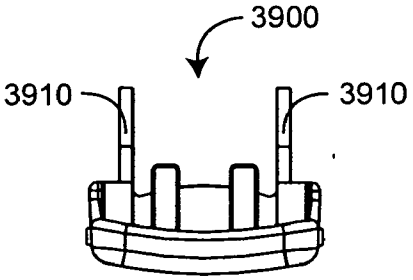

FIG. 39C

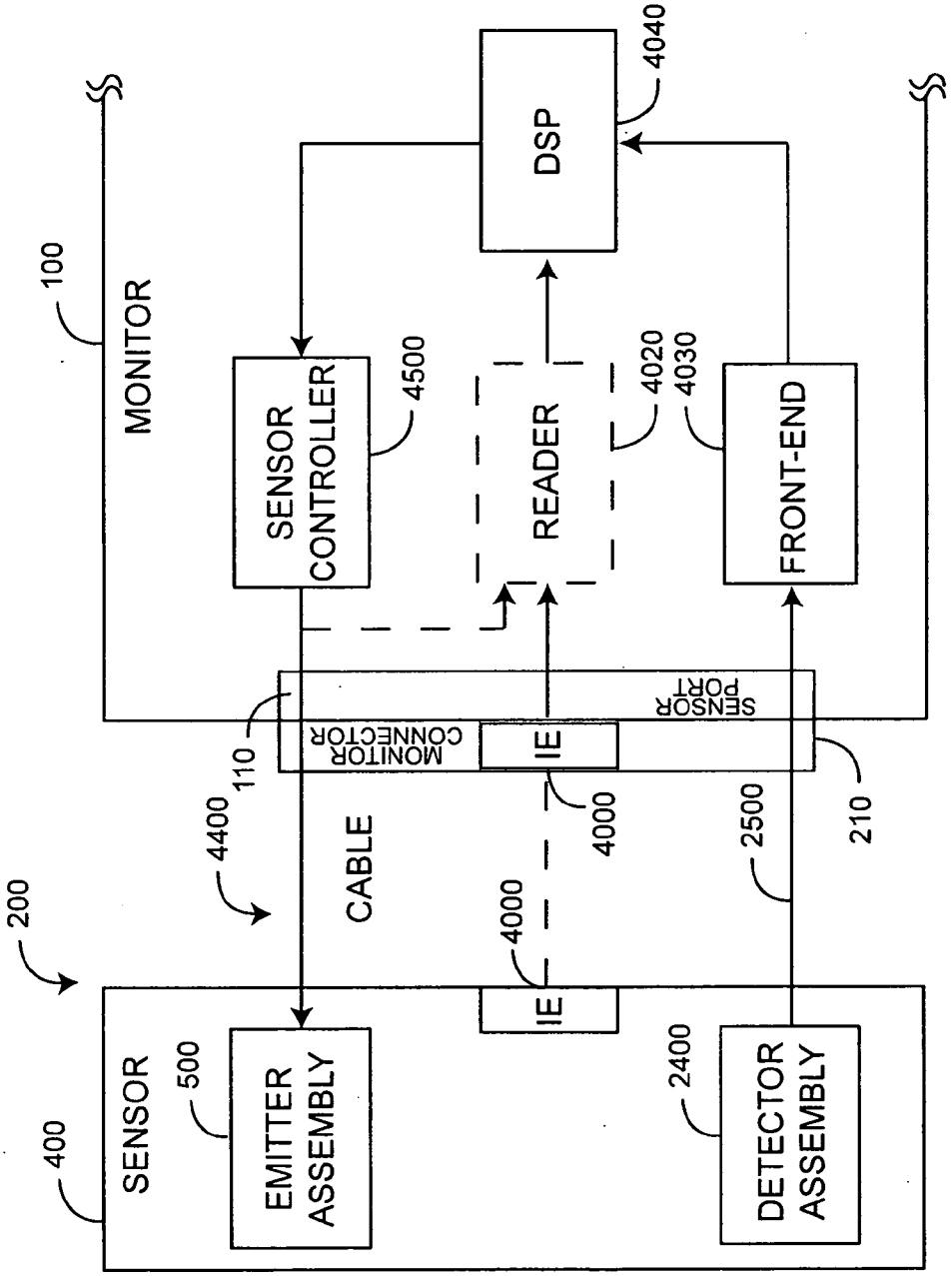
100
MONITOR
DSP
4040
SENSOR CONTROLLER
4500
READER
4020
4030
FRONT-END
MONITOR CONNECTOR
IE
SENSOR PORT
110
210
4400
CABLE
4000
2500
200
4000
IE
SENSOR
400
500
EMITTER ASSEMBLY
2400
DETECTOR ASSEMBLY

FIG. 40

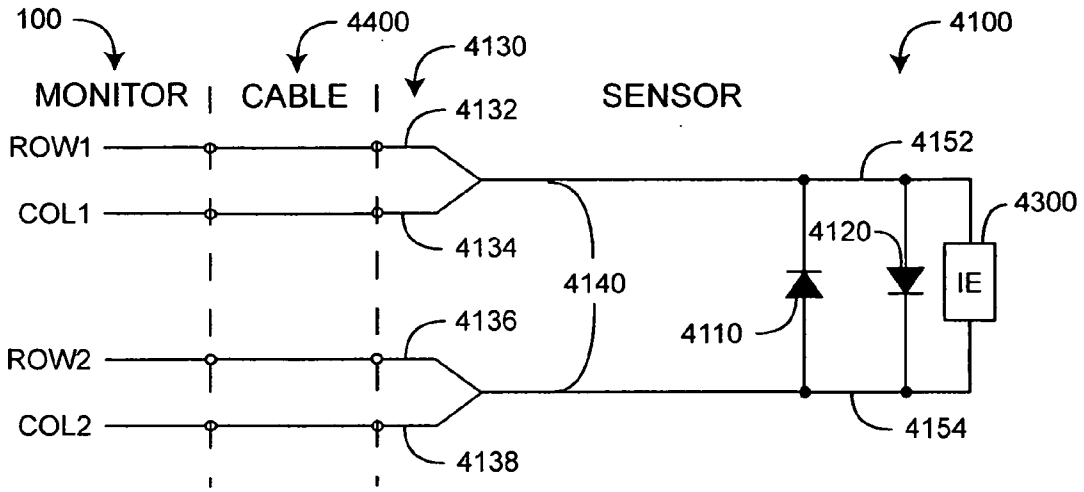

FIG. 41A

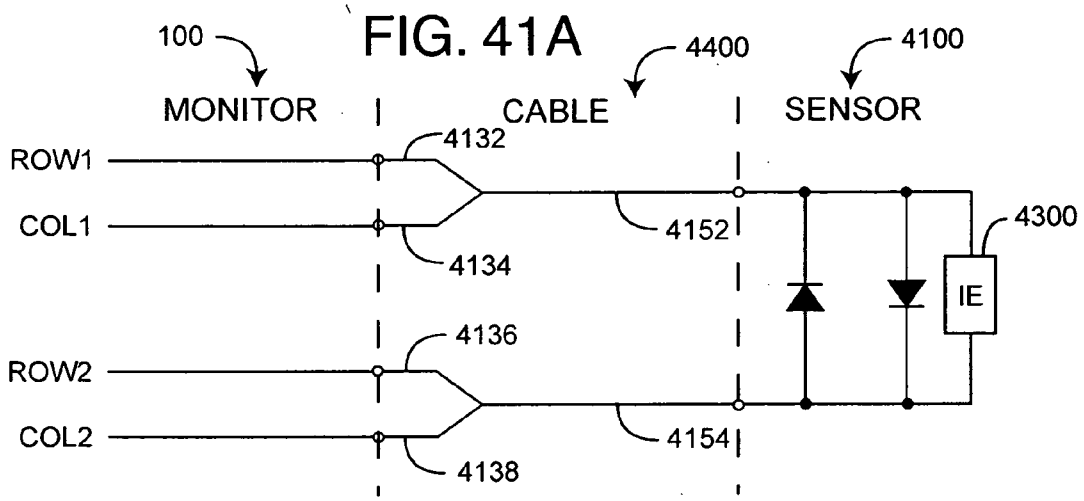

FIG. 41B

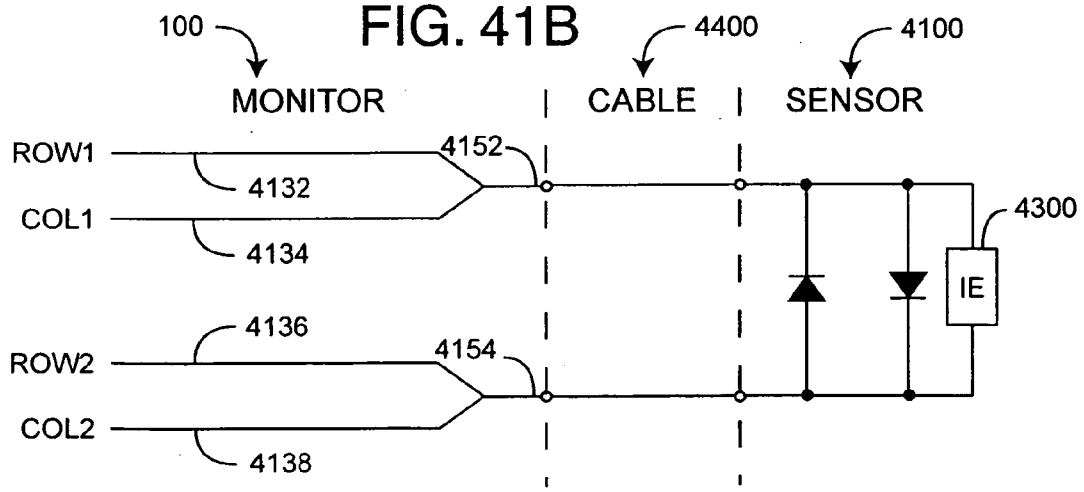

FIG. 41C

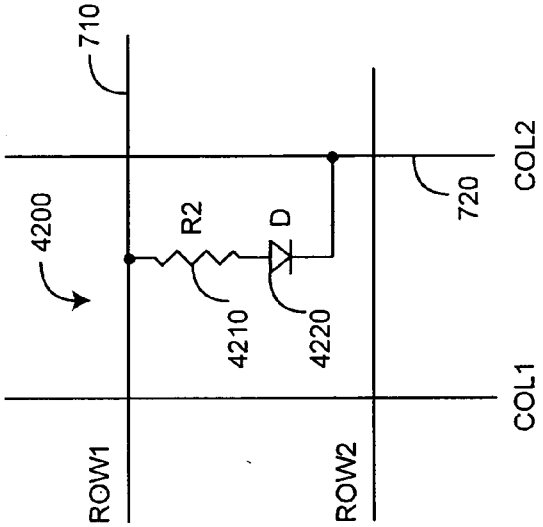

FIG. 42

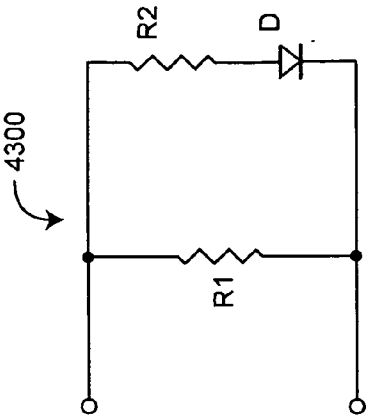

FIG. 43C

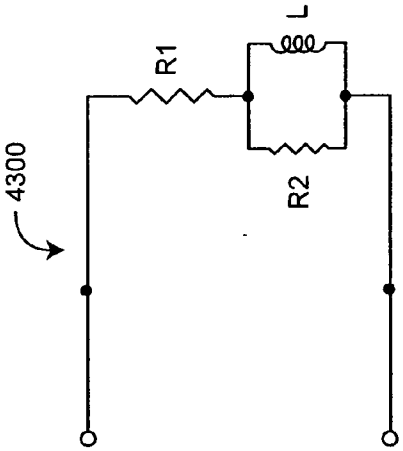

FIG. 43B

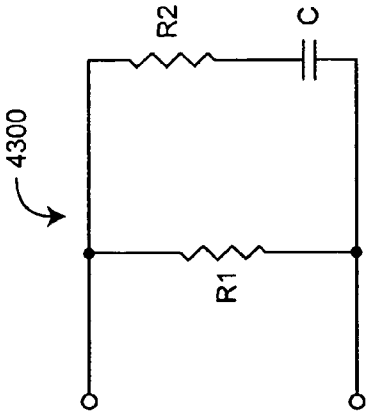

FIG. 43A

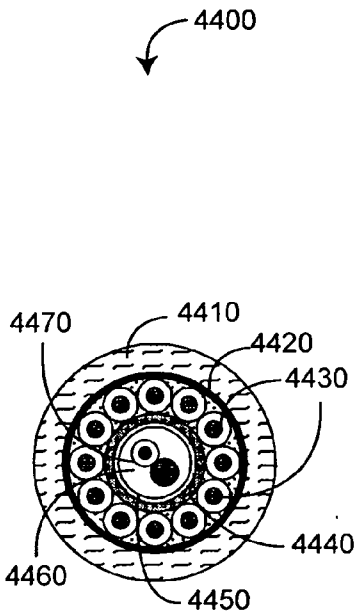

FIG. 44A

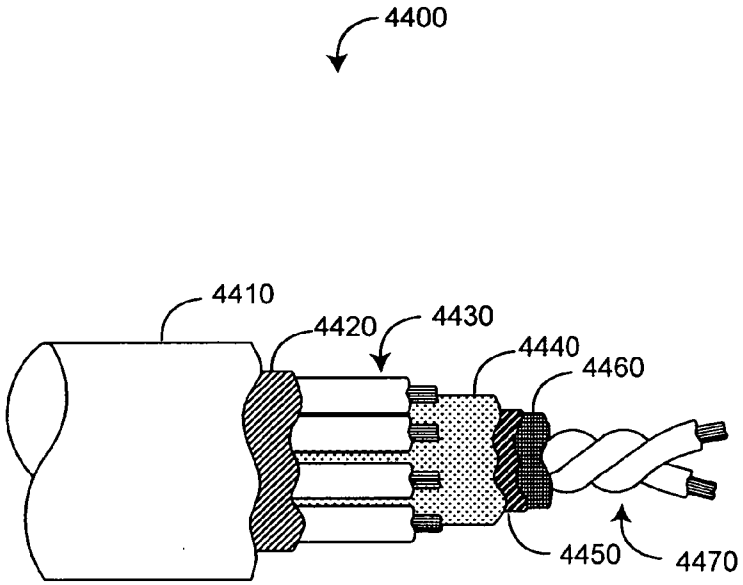

FIG. 44B

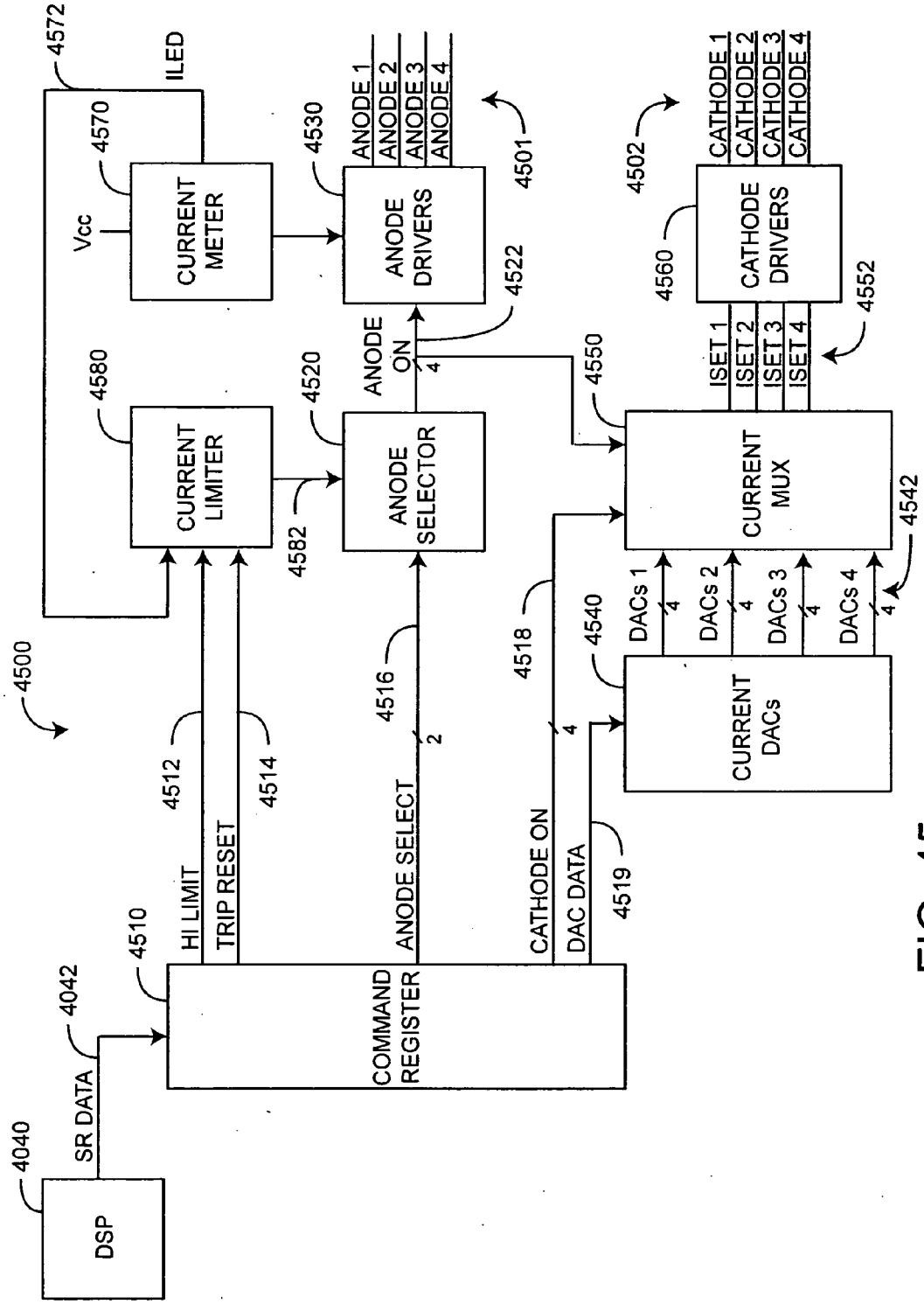
4572
ILED
4570
Vcc
CURRENT METER
4580
CURRENT LIMITER
4500
4530
ANODE 1
ANODE 2
ANODE 3
ANODE 4
ANODE DRIVERS
4501
4522
ANODE ON
4520
ANODE SELECTOR
4582
4502
CATHODE 1
CATHODE 2
CATHODE 3
CATHODE 4
CATHODE DRIVERS
4560
4552
ISET 1
ISET 2
ISET 3
ISET 4
4550
CURRENT MUX
4542
DACs 1
DACs 2
DACs 3
DACs 4
4540
CURRENT DACs
4518
4519
4516
4512
4514
HI LIMIT
TRIP RESET
ANODE SELECT
CATHODE ON
DAC DATA
4510
COMMAND REGISTER
4042
SR DATA
4040
DSP

FIG. 45

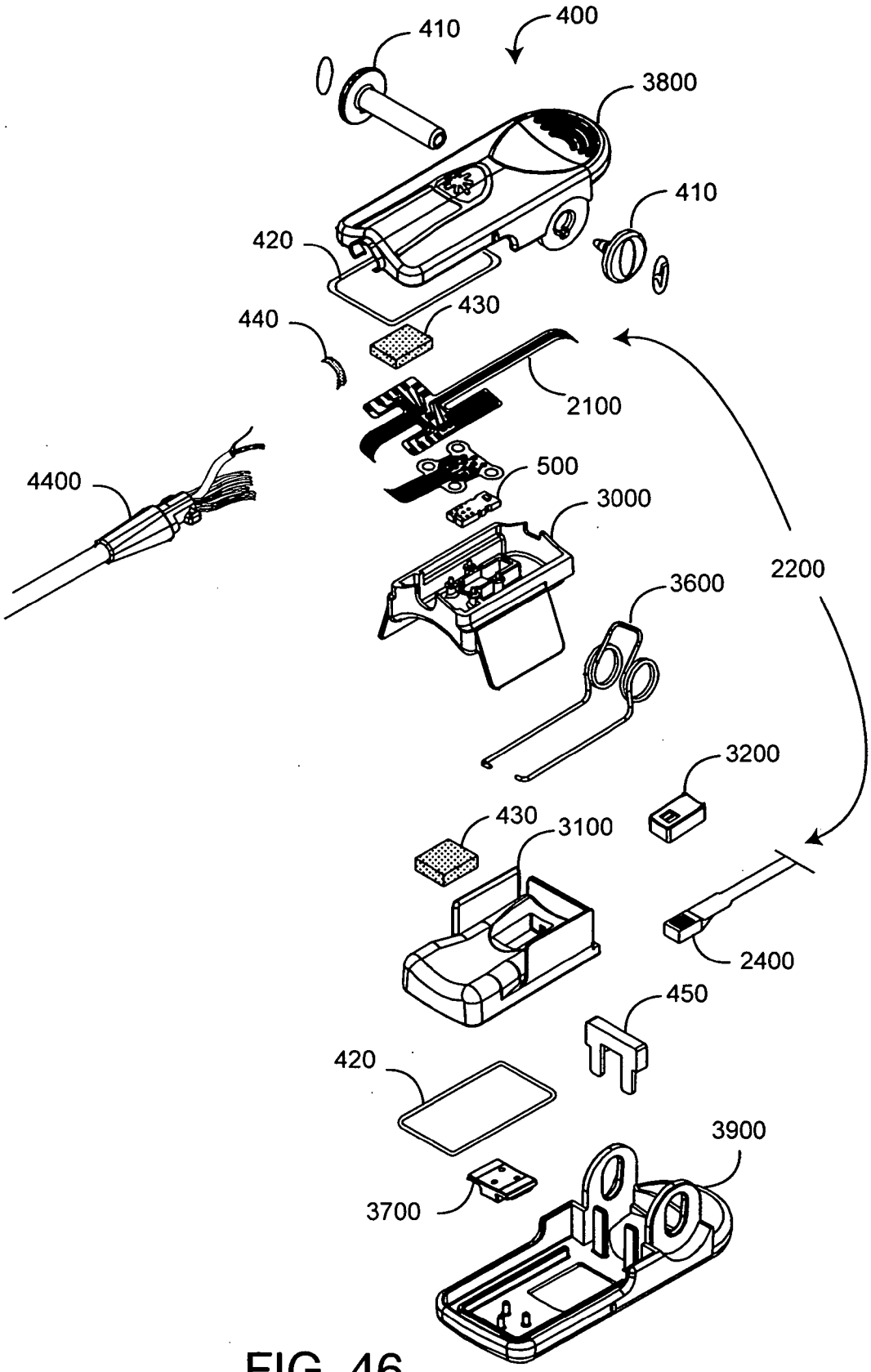
400
410
3800
410
420
430
440
2100
4400
500
3000
2200
3600
3200
430
3100
2400
450
420
3900
3700

FIG. 46

MULTIPLE WAVELENGTH SENSOR EMITTERS

PRIORITY CLAIM TO RELATED PROVISIONAL APPLICATIONS

[0001] The present application claims priority benefit under 35 U.S.C. § 119(e) to U.S. Provisional Patent Application Serial No. 60/657,596, filed Mar, 1, 2005, entitled "Multiple Wavelength Sensor," No. 60/657,281, filed Mar, 1, 2005, entitled "*Physiological Parameter Confidence Measure*," No. 60/657,268, filed March 1, 2005, entitled "*Configurable Physiological Measurement System*," and No. 60/57,759, filed Mar. 1, 2005, entitled "*Noninvasive Multi-Parameter Patient Monitor*." The present application incorporates the foregoing disclosures herein by reference.

INCORPORATION BY REFERENCE OF COPENDING RELATED APPLICATIONS

[0002] The present application is related to the following copending U.S. utility applications:

	App. Sr. No.	Filing Date	Title	Atty Dock.
1	11/###,###	Mar. 1, 2006	Multiple Wavelength Sensor Emitters	MLR.002A
2	11/###,###	Mar. 1, 2006	Multiple Wavelength Sensor Equalization	MLR.003A
3	11/###,###	Mar. 1, 2006	Multiple Wavelength Sensor Substrate	MLR.004A
4	11/###,###	Mar. 1, 2006	Multiple Wavelength Sensor Interconnect	MLR.005A
5	11/###,###	Mar. 1, 2006	Multiple Wavelength Sensor Attachment	MLR.006A
6	11/###,###	Mar. 1, 2006	Multiple Wavelength Sensor Drivers	MLR.009A
7	11/###,###	Mar. 1, 2006	Physiological Parameter Confidence Measure	MLR.010A
8	11/###,###	Mar. 1, 2006	Configurable Physiological Measurement System	MLR.011A
9	11/###,###	Mar. 1, 2006	Noninvasive Multi-Parameter Patient Monitor	MLR.012A
10	11/###,###	Mar. 1, 2006	Noninvasive Multi-Parameter Patient Monitor	MLR.013A
11	11/###,###	Mar. 1, 2006	Noninvasive Multi-Parameter Patient Monitor	MLR.014A

[0003] The present application incororated the foregoing disclosure herein by reference.itor d e 4

BACKGROUND OF THE INVENTION

[0004] Spectroscopy is a common technique for measuring the concentration of organic and some inorganic constituents of a solution. The theoretical basis of this technique is the Beer-Lambert law, which states that the concentration c_i of an absorbent in solution can be determined by the intensity of light transmitted through the solution, knowing the pathlength d_λ, the intensity of the incident light $I_{0,\lambda}$, and the extinction coefficient $\epsilon_{i,\lambda}$ at a particular wavelength λ. In generalized form, the Beer-Lambert law is expressed as:

$$I_\lambda = I_{0,\lambda} e^{-d_\lambda \cdot \mu_{a,\lambda}} \quad (1)$$

$$\mu_{a,\lambda} = \sum_{i=1}^{n} \varepsilon_{i,\lambda} \cdot c_i \quad (2)$$

where $\mu_{a,\lambda}$ is the bulk absorption coefficient and represents the probability of absorption per unit length. The minimum number of discrete wavelengths that are required to solve EQS. 1-2 are the number of significant absorbers that are present in the solution.

[0005] A practical application of this technique is pulse oximetry, which utilizes a noninvasive sensor to measure oxygen saturation (SpO_2) and pulse rate. In general, the sensor has light emitting diodes (LEDs) that transmit optical radiation of red and infrared wavelengths into a tissue site and a detector that responds to the intensity of the optical radiation after absorption (e.g., by transmission or transreflectance) by pulsatile arterial blood flowing within the tissue site. Based on this response, a processor determines measurements for SPO_2, pulse rate, and can output representative plethysmographic waveforms. Thus, "pulse oximetry" as used herein encompasses its broad ordinary meaning known to one of skill in the art, which includes at least those noninvasive procedures for measuring parameters of circulating blood through spectroscopy. Moreover, "plethysmograph" as used herein (commonly referred to as "photoplethysmograph"), encompasses its broad ordinary meaning known to one of skill in the art, which includes at least data representative of a change in the absorption of particular wavelengths of light as a function of the changes in body tissue resulting from pulsing blood. Pulse oximeters capable of reading through motion induced noise are available from Masimo Corporation ("Masimo") of Irvine, Calif. Moreover, portable and other oximeters capable of reading through motion induced noise are disclosed in at least U.S. Pat. Nos. 6,770,028, 6,658,276, 6,157,850, 6,002,952 5,769, 785, and 5,758,644, which are owned by Masimo and are incorporated by reference herein. Such reading through motion oximeters have gained rapid acceptance in a wide variety of medical applications, including surgical wards, intensive care and neonatal units, general wards, home care, physical training, and virtually all types of monitoring scenarios.

SUMMARY OF THE INVENTION

[0006] There is a need to noninvasively measure multiple physiological parameters, other than, or in addition to, oxygen saturation and pulse rate. For example, hemoglobin species that are also significant under certain circumstances are carboxyhemoglobin and methemoglobin. Other blood parameters that may be measured to provide important clinical information are fractional oxygen saturation, total hemaglobin (Hbt), bilirubin and blood glucose, to name a few.

[0007] One aspect of a physiological sensor is light emitting sources, each activated by addressing at least one row and at least one column of an electrical grid. The light emitting sources transmit light having multiple wavelengths and a detector is responsive to the transmitted light after attenuation by body tissue.

[0008] Another aspect of a physiological sensor is light emitting sources capable of transmitting light having multiple wavelengths. Each of the light emitting sources includes a first contact and a second contact. The first contacts of a first set of the light emitting sources are in communication with a first conductor and the second contacts of a second set of the light emitting sources are in communication with a second conductor. A detector is capable of detecting the transmitted light attenuated by body tissue and outputting a signal indicative of at least one physiological parameter of the body tissue. At least one light emitting source of the first set and at least one light emitting source of the second set are not common to the first and second sets. Further, each of the first set and the second set comprises at least two of the light emitting sources.

[0009] A further aspect of a physiological sensor sequentially addresses light emitting sources using conductors of an electrical grid so as to emit light having multiple wavelengths that when attenuated by body tissue is indicative of at least one physiological characteristic. The emitted light is detected after attenuation by body tissue.

BRIEF DESCRIPTION OF THE DRAWINGS

[0010] **FIG. 1** is a perspective view of a physiological measurement system utilizing a multiple wavelength sensor;

[0011] FIGS. **2**A-C are perspective views of multiple wavelength sensor embodiments;

[0012] **FIG. 3** is a general block diagram of a multiple wavelength sensor and sensor controller;

[0013] **FIG. 4** is an exploded perspective view of a multiple wavelength sensor embodiment;

[0014] **FIG. 5** is a general block diagram of an emitter assembly;

[0015] **FIG. 6** is a perspective view of an emitter assembly embodiment;

[0016] **FIG. 7** is a general block diagram of an emitter array;

[0017] **FIG. 8** is a schematic diagram of an emitter array embodiment;

[0018] **FIG. 9** is a general block diagram of equalization;

[0019] FIGS. **10**A-D are block diagrams of various equalization embodiments;

[0020] FIGS. **11**A-C are perspective views of an emitter assembly incorporating various equalization embodiments;

[0021] **FIG. 12** is a general block diagram of an emitter substrate;

[0022] **FIGS. 13-14** are top and detailed side views of an emitter substrate embodiment;

[0023] **FIG. 15-16** are top and bottom component layout views of an emitter substrate embodiment;

[0024] **FIG. 17** is a schematic diagram of an emitter substrate embodiment;

[0025] **FIG. 18** is a plan view of an inner layer of an emitter substrate embodiment;

[0026] **FIG. 19** is a general block diagram of an interconnect assembly in relationship to other sensor assemblies;

[0027] **FIG. 20** is a block diagram of an interconnect assembly embodiment;

[0028] **FIG. 21** is a partially-exploded perspective view of a flex circuit assembly embodiment of an interconnect assembly;

[0029] **FIG. 22** is a top plan view of a flex circuit;

[0030] **FIG. 23** is an exploded perspective view of an emitter portion of a flex circuit assembly;

[0031] **FIG. 24** is an exploded perspective view of a detector assembly embodiment;

[0032] **FIGS. 25-26** are block diagrams of adjacent detector and stacked detector embodiments;

[0033] **FIG. 27** is a block diagram of a finger clip embodiment of an attachment assembly;

[0034] **FIG. 28** is a general block diagram of a detector pad;

[0035] FIGS. **29**A-B are perspective views of detector pad embodiments;

[0036] FIGS. **30**A-H are perspective bottom, perspective top, bottom, back, top, side cross sectional, side, and front cross sectional views of an emitter pad embodiment;

[0037] FIGS. **31**A-H are perspective bottom, perspective top, top, back, bottom, side cross sectional, side, and front cross sectional views of a detector pad embodiment;

[0038] FIGS. **32**A-H are perspective bottom, perspective top, top, back, bottom, side cross sectional, side, and front cross sectional views of a shoe box;

[0039] FIGS. **33**A-H are perspective bottom, perspective top, top, back, bottom, side cross sectional, side, and front cross sectional views of a slim-finger emitter pad embodiment;

[0040] FIGS. **34**A-H are perspective bottom, perspective top, top, back, bottom, side cross sectional, side, and front cross sectional views of a slim-finger detector pad embodiment;

[0041] FIGS. **35**A-B are plan and cross sectional views, respectively, of a spring assembly embodiment;

[0042] FIGS. **36**A-C are top, perspective and side views of a finger clip spring;

[0043] FIGS. **37**A-D are top, back, bottom, and side views of a spring plate;

[0044] FIGS. **38**A-D are front cross sectional, bottom, front and side cross sectional views of an emitter-pad shell;

[0045] FIGS. **39**A-D are back, top, front and side cross sectional views of a detector-pad shell;

[0046] **FIG. 40** is a general block diagram of a monitor and a sensor;

[0047] FIGS. **41**A-C are schematic diagrams of grid drive embodiments for a sensor having back-to-back diodes and an information element;

[0048] FIGS. **42** is a schematic diagrams of a grid drive embodiment for an information element;

[0049] FIGS. **43**A-C are schematic diagrams for grid drive readable information elements;

[0050] FIGS. **44**A-B are cross sectional and side cut away views of a sensor cable;

[0051] **FIG. 45** is a block diagram of a sensor controller embodiment; and

[0052] **FIG. 46** is a detailed exploded perspective view of a multiple wavelength sensor embodiment.

DETAILED DESCRIPTION OF THE PREFERRED EMBODIMENTS

Overview

[0053] In this application, reference is made to many blood parameters. Some references that have common shorthand designations are referenced through such shorthand designations. For example, as used herein, HbCO designates carboxyhemoglobin, HbMet designates methemoglobin, and Hbt designates total hemoglobin. Other shorthand designations such as COHb, MetHb, and tHb are also common in the art for these same constituents. These constituents are generally reported in terms of a percentage, often referred to as saturation, relative concentration or fractional saturation. Total hemoglobin is generally reported as a concentration in g/dL. The use of the particular shorthand designators presented in this application does not restrict the term to any particular manner in which the designated constituent is reported.

[0054] **FIG. 1** illustrates a physiological measurement system **10** having a monitor **100** and a multiple wavelength sensor assembly **200** with enhanced measurement capabilities as compared with conventional pulse oximetry. The physiological measurement system **10** allows the monitoring of a person, including a patient. In particular, the multiple wavelength sensor assembly **200** allows the measurement of blood constituent and related parameters in addition to oxygen saturation and pulse rate. Alternatively, the multiple wavelength sensor assembly **200** allows the measurement of oxygen saturation and pulse rate with increased accuracy or robustness as compared with conventional pulse oximetry.

[0055] In one embodiment, the sensor assembly **200** is configured to plug into a monitor sensor port **110**. Monitor keys **160** provide control over operating modes and alarms, to name a few. A display **170** provides readouts of measured parameters, such as oxygen saturation, pulse rate, HbCO and HbMet to name a few.

[0056] **FIGS. 2A** illustrates a multiple wavelength sensor assembly **200** having a sensor **400** adapted to attach to a tissue site, a sensor cable **4400** and a monitor connector **210**. In one embodiment, the sensor **400** is incorporated into a reusable finger clip adapted to removably attach to, and transmit light through, a fingertip. The sensor cable **4400** and monitor connector **210** are integral to the sensor **400**, as shown. In alternative embodiments, the sensor **400** may be configured separately from the cable **4400** and connector **210**.

[0057] FIGS. **2**B-C illustrate alternative sensor embodiments, including a sensor **401** (**FIG. 2B**) partially disposable and partially reusable (resposable) and utilizing an adhesive attachment mechanism. Also shown is a sensor **402** (**FIG. 2C**) being disposable and utilizing an adhesive attachment mechanism. In other embodiments, a sensor may be configured to attach to various tissue sites other than a finger, such as a foot or an ear. Also a sensor may be configured as a reflectance or transflectance device that attaches to a forehead or other tissue surface.

[0058] **FIG. 3** illustrates a sensor assembly **400** having an emitter assembly **500**, a detector assembly **2400**, an interconnect assembly **1900** and an attachment assembly **2700**. The emitter assembly **500** responds to drive signals received from a sensor controller **4500** in the monitor **100** via the cable **4400** so as to transmit optical radiation having a plurality of wavelengths into a tissue site. The detector assembly **2400** provides a sensor signal to the monitor **100** via the cable **4400** in response to optical radiation received after attenuation by the tissue site. The interconnect assembly **1900** provides electrical communication between the cable **4400** and both the emitter assembly **500** and the detector assembly **2400**. The attachment assembly **2700** attaches the emitter assembly **500** and detector assembly **2400** to a tissue site, as described above. The emitter assembly **500** is described in further detail with respect to **FIG. 5**, below. The interconnect assembly **1900** is described in further detail with respect to **FIG. 19**, below. The detector assembly **2400** is described in further detail with respect to **FIG. 24**, below. The attachment assembly **2700** is described in further detail with respect to **FIG. 27**, below.

[0059] **FIG. 4** illustrates a sensor **400** embodiment that removably attaches to a fingertip. The sensor **400** houses a multiple wavelength emitter assembly **500** and corresponding detector assembly **2400**. A flex circuit assembly **1900** mounts the emitter and detector assemblies **500**, **2400** and interconnects them to a multi-wire sensor cable **4400**. Advantageously, the sensor **400** is configured in several respects for both wearer comfort and parameter measurement performance. The flex circuit assembly **1900** is configured to mechanically decouple the cable **4400** wires from the emitter and detector assemblies **500**, **2400** to reduce pad stiffness and wearer discomfort. The pads **3000**, **3100** are mechanically decoupled from shells **3800**, **3900** to increase flexibility and wearer comfort. A spring **3600** is configured in hinged shells **3800**, **3900** so that the pivot point of the finger clip is well behind the fingertip, improving finger attachment and more evenly distributing the clip pressure along the finger.

[0060] As shown in **FIG. 4**, the detector pad **3100** is structured to properly position a fingertip in relationship to the detector assembly **2400**. The pads have flaps that block ambient light. The detector assembly **2400** is housed in an enclosure so as to reduce light piping from the emitter assembly to the detector assembly without passing through fingertip tissue. These and other features are described in detail below. Specifically, emitter assembly embodiments are described with respect to **FIGS. 5-18**. Interconnect assembly embodiments, including the flexible circuit assembly **1900**, are described with respect to **FIGS. 19-23**. Detector assembly embodiments are described with respect to **FIGS. 24-26**. Attachment assembly embodiments are described with respect to **FIGS. 27-39**.

Emitter Assembly

[0061] **FIG. 5** illustrates an emitter assembly **500** having an emitter array **700**, a substrate **1200** and equalization **900**. The emitter array **700** has multiple light emitting sources, each activated by addressing at least one row and at least one column of an electrical grid. The light emitting sources are capable of transmitting optical radiation having multiple wavelengths. The equalization **900** accounts for differences in tissue attenuation of the optical radiation across the multiple wavelengths so as to at least reduce wavelength-dependent variations in detected intensity. The substrate **1200** provides a physical mount for the emitter array and emitter-related equalization and a connection between the emitter array and the interconnection assembly. Advantageously, the substrate **1200** also provides a bulk temperature measurement so as to calculate the operating wavelengths for the light emitting sources. The emitter array **700** is described in further detail with respect to **FIG. 7**, below. Equalization is described in further detail with respect to **FIG. 9**, below. The substrate **1200** is described in further detail with respect to **FIG. 12**, below.

[0062] **FIG. 6** illustrates an emitter assembly **500** embodiment having an emitter array **700**, an encapsulant **600**, an optical filter **1100** and a substrate **1200**. Various aspects of the emitter assembly **500** are described with respect to **FIGS. 7-18**, below. The emitter array **700** emits optical radiation having multiple wavelengths of predetermined nominal values, advantageously allowing multiple parameter measurements. In particular, the emitter array **700** has multiple light emitting diodes (LEDs) **710** that are physically arranged and electrically connected in an electrical grid to facilitate drive control, equalization, and minimization of optical pathlength differences at particular wavelengths. The optical filter **1100** is advantageously configured to provide intensity equalization across a specific LED subset. The substrate **1200** is configured to provide a bulk temperature of the emitter array **700** so as to better determine LED operating wavelengths.

[0063] Emitter Array

[0064] **FIG. 7** illustrates an emitter array **700** having multiple light emitters (LE) **710** capable of emitting light **702** having multiple wavelengths into a tissue site **1**. Row drivers **4530** and column drivers **4560** are electrically connected to the light emitters **710** and activate one or more light emitters **710** by addressing at least one row **720** and at least one column **740** of an electrical grid. In one embodiment, the light emitters **710** each include a first contract **712** and a second contact **714**. The first contract **712** of a first subset **730** of light emitters is in communication with a first conductor **720** of the electrical grid. The second contact **714** of a second subset **750** of light emitters is in communication with a second conductor **740**. Each subset comprises at least two light emitters, and at least one of the light emitters of the first and second subsets **730**, **750** are not in common. A detector **2400** is capable of detecting the emitted light **702** and outputting a sensor signal **2500** responsive to the emitted light **702** after attenuation by the tissue site **1**. As such, the sensor signal **2500** is indicative of at least one physiological parameter corresponding to the tissue site **1**, as described above.

[0065] **FIG. 8** illustrates an emitter array **700** having LEDs **801** connected within an electrical grid of n rows and m columns totaling n+m drive lines **4501**, **4502**, where n and m integers greater than one. The electrical grid advantageously minimizes the number of drive lines required to activate the LEDs **801** while preserving flexibility to selectively activate individual LEDs **801** in any sequence and multiple LEDs **801** simultaneously. The electrical grid also facilitates setting LED currents so as to control intensity at each wavelength, determining operating wavelengths and monitoring total grid current so as to limit power dissipation. The emitter array **700** is also physically configured in rows **810**. This physical organization facilitates clustering LEDs **801** according to wavelength so as to minimize pathlength variations and facilitates equalization of LED intensities.

[0066] As shown in **FIG. 8**, one embodiment of an emitter array **700** comprises up to sixteen LEDs **801** configured in an electrical grid of four rows **810** and four columns **820**. Each of the four row drive lines **4501** provide a common anode connection to four LEDs **801**, and each of the four column drive lines **4502** provide a common cathode connection to four LEDs **801**. Thus, the sixteen LEDs **801** are advantageously driven with only eight wires, including four anode drive lines **812** and four cathode drive lines **822**. This compares favorably to conventional common anode or cathode LED configurations, which require more drive lines. In a particular embodiment, the emitter array **700** is partially populated with eight LEDs having nominal wavelengths as shown in TABLE 1. Further, LEDs having wavelengths in the range of 610-630 nm are grouped together in the same row. The emitter array **700** is adapted to a physiological measurement system **10** (**FIG. 1**) for measuring H_bCO and/or METHb in addition to S_pO_2 and pulse rate.

TABLE 1

	Nominal LED Wavelengths		
LED	λ	Row	Col
D1	630	1	1
D2	620	1	2
D3	610	1	3
D4		1	4
D5	700	2	1
D6	730	2	2
D7	660	2	3
D8	805	2	4
D9		3	1
D10		3	2
D11		3	3
D12	905	3	4
D13		4	1
D14		4	2
D15		4	3
D16		4	4

[0067] Also shown in **FIG. 8**, row drivers **4530** and column drivers **4560** located in the monitor **100** selectively activate the LEDs **801**. In particular, row and column drivers **4530**, **4560** function together as switches to Vcc and current sinks, respectively, to activate LEDs and as switches to ground and Vcc, respectively, to deactivate LEDs. This push-pull drive configuration advantageously prevents parasitic current flow in deactivated LEDs. In a particular embodiment, only one row drive line **4501** is switched to Vcc at a time. One to four column drive lines **4502**, however, can be simultaneously switched to a current sink so as to simultaneously activate multiple LEDs within a particular

row. Activation of two or more LEDs of the same wavelength facilitates intensity equalization, as described with respect to **FIGS. 9-11**, below. LED drivers are described in further detail with respect to **FIG. 45**, below.

[**0068**] Although an emitter assembly is described above with respect to an array of light emitters each configured to transmit optical radiation centered around a nominal wavelength, in another embodiment, an emitter assembly advantageously utilizes one or more tunable broadband light sources, including the use of filters to select the wavelength, so as to minimize wavelength-dependent pathlength differences from emitter to detector. In yet another emitter assembly embodiment, optical radiation from multiple emitters each configured to transmit optical radiation centered around a nominal wavelength is funneled to a tissue site point so as to minimize wavelength-dependent pathlength differences. This funneling may be accomplish with fiberoptics or mirrors, for example. In further embodiments, the LEDs **801** can be configured with alternative orientations with correspondingly different drivers among various other configurations of LEDs, drivers and interconnecting conductors.

[**0069**] Equalization

[**0070**] **FIG. 9** illustrate a physiological parameter measurement system **10** having a controller **4500**, an emitter assembly **500**, a detector assembly **2400** and a front-end **4030**. The emitter assembly **500** is configured to transmit optical radiation having multiple wavelengths into the tissue site **1**. The detector assembly **2400** is configured to generate a sensor signal **2500** responsive to the optical radiation after tissue attenuation. The front-end **4030** conditions the sensor signal **2500** prior to analog-to-digital conversion (ADC).

[**0071**] **FIG. 9** also generally illustrates equalization **900** in a physiological measurement system **10** operating on a tissue site **1**. Equalization encompasses features incorporated into the system **10** in order to provide a sensor signal **2500** that falls well within the dynamic range of the ADC across the entire spectrum of emitter wavelengths. In particular, equalization compensates for the imbalance in tissue light absorption due to Hb and HbO_2 **910**. Specifically, these blood constituents attenuate red wavelengths greater than IR wavelengths. Ideally, equalization **900** balances this unequal attenuation. Equalization **900** can be introduced anywhere in the system **10** from the controller **4500** to front-end **4000** and can include compensatory attenuation versus wavelength, as shown, or compensatory amplification versus or both.

[**0072**] Equalization can be achieved to a limited extent by adjusting drive currents from the controller **4500** and front-end **4030** amplification accordingly to wavelength so as to compensate for tissue absorption characteristics. Signal demodulation constraints, however, limit the magnitude of these adjustments. Advantageously, equalization **900** is also provided along the optical path from emitters **500** to detector **2400**. Equalization embodiments are described in further detail with respect to **FIGS. 10-11**, below.

[**0073**] FIGS. **10**A-D illustrate various equalization embodiments having an emitter array **700** adapted to transmit optical radiation into a tissue site **1** and a detector assembly **2400** adapted to generate a sensor signal **2500** responsive to the optical radiation after tissue attenuation. **FIG. 10A** illustrates an optical filter **1100** that attenuates at least a portion of the optical radiation before it is transmitted into a tissue site **1**. In particular, the optical filter **1100** attenuates at least a portion of the IR wavelength spectrum of the optical radiation so as to approximate an equalization curve **900** (**FIG. 9**). **FIG. 10B** illustrates an optical filter **1100** that attenuates at least a portion of the optical radiation after it is attenuated by a tissue site **1**, where the optical filter **1100** approximates an equalization curve **900** (**FIG. 9**).

[**0074**] **FIG. 10C** illustrates an emitter array **700** where at least a portion of the emitter array generates one or more wavelengths from multiple light emitters **710** of the same wavelength. In particular, the same-wavelength light emitters **710** boost at least a portion of the red wavelength spectrum so as to approximately equalize the attenuation curves **910** (**FIG. 9**). **FIG. 10D** illustrates a detector assembly **2400** having multiple detectors **2610**, **2620** selected so as to equalize the attenuation curves **910** (**FIG. 9**). To a limited extent, optical equalization can also be achieved by selection of particular emitter array **700** and detector **2400** components, e.g. LEDs having higher output intensities or detectors having higher sensitivities at red wavelengths. Although equalization embodiments are described above with respect to red and IR wavelengths, these equalization embodiments can be applied to equalize tissue characteristics across any portion of the optical spectrum.

[**0075**] FIGS. **11**A-C illustrates an optical filter **1100** for an emitter assembly **500** that advantageously provides optical equalization, as described above. LEDs within the emitter array **700** may be grouped according to output intensity or wavelength or both. Such a grouping facilitates equalization of LED intensity across the array. In particular, relatively low tissue absorption and/or relatively high output intensity LEDs can be grouped together under a relatively high attenuation optical filter. Likewise, relatively low tissue absorption and/or relatively low output intensity LEDs can be grouped together without an optical filter or under a relatively low or negligible attenuation optical filter. Further, high tissue absorption and/or low intensity LEDs can be grouped within the same row with one or more LEDs of the same wavelength being simultaneously activated, as described with respect to **FIG. 10C**, above. In general, there can be any number of LED groups and any number of LEDs within a group. There can also be any number of optical filters corresponding to the groups having a range of attenuation, including no optical filter and/or a "clear" filter having negligible attenuation.

[**0076**] As shown in FIGS. **11**A-C, a filtering media may be advantageously added to an encapsulant that functions both as a cover to protect LEDs and bonding wires and as an optical filter **1100**. In one embodiment, a filtering media **1100** encapsulates a select group of LEDs and a clear media **600** (**FIG. 6**) encapsulates the entire array **700** and the filtering media **1000** (**FIG. 6**). In a particular embodiment, corresponding to TABLE 1, above, five LEDs nominally emitting at 660-905 nm are encapsulated with both a filtering media **1100** and an overlying clear media **600** (**FIG. 6**), i.e. attenuated. In a particular embodiment, the filtering media **1100** is a 40:1 mixture of a clear encapsulant (EPO-TEK OG147-7) and an opaque encapsulate (EPO-TEK OG147) both available from Epoxy Technology, Inc., Billerica, Mass. Three LEDs nominally emitting at 610-630 nm are only encapsulated with the clear media **600** (**FIG. 6**), i.e. unattenuated. In alternative embodiments, individual LEDs may be singly or multiply encapsulated according to tissue

absorption and/or output intensity. In other alternative embodiments, filtering media may be separately attachable optical filters or a combination of encapsulants and separately attachable optical filters. In a particular embodiment, the emitter assembly **500** has one or more notches along each side proximate the component end **1305** (**FIG. 13**) for retaining one or more clip-on optical filters.

[**0077**] Substrate

[**0078**] **FIG. 12** illustrates light emitters **710** configured to transmit optical radiation **1201** having multiple wavelengths in response to corresponding drive currents **1210**. A thermal mass **1220** is disposed proximate the emitters **710** so as to stabilize a bulk temperature **1202** for the emitters. A temperature sensor **1230** is thermally coupled to the thermal mass **1220**, wherein the temperature sensor **1230** provides a temperature sensor output **1232** responsive to the bulk temperature **1202** so that the wavelengths are determinable as a function of the drive currents **1210** and the bulk temperature **1202**.

[**0079**] In one embodiment, an operating wavelength λ_a of each light emitter **710** is determined according to EQ. 3

$$\lambda_a = f(T_b, I_{drive}, \sum I_{drive}) \tag{3}$$

where T_b is the bulk temperature, I_{drive} is the drive current for a particular light emitter, as determined by the sensor controller **4500** (**FIG. 45**), described below, and ΣI_{drive} is the total drive current for all light emitters. In another embodiment, temperature sensors are configured to measure the temperature of each light emitter **710** and an operating wavelength λ_a of each light emitter **710** is determined according to EQ. 4

$$\lambda_a = f(T_a, I_{drive}, \sum I_{drive}) \tag{4}$$

where T_a is the temperature of a particular light emitter, I_{drive} is the drive current for that light emitter and ΣI_{drive} is the total drive current for all light emitters.

[**0080**] In yet another embodiment, an operating wavelength for each light emitter is determined by measuring the junction voltage for each light emitter **710**. In a further embodiment, the temperature of each light emitter **710** is controlled, such as by one or more Peltier cells coupled to each light emitter **710**, and an operating wavelength for each light emitter **710** is determined as a function of the resulting controlled temperature or temperatures. In other embodiments, the operating wavelength for each light emitter **710** is determined directly, for example by attaching a charge coupled device (CCD) to each light emitter or by attaching a fiberoptic to each light emitter and coupling the fiberoptics to a wavelength measuring device, to name a few.

[**0081**] **FIGS. 13-18** illustrate one embodiment of a substrate **1200** configured to provide thermal conductivity between an emitter array **700** (**FIG. 8**) and a thermistor **1540** (**FIG. 16**). In this manner, the resistance of the thermistor **1540** (**FIG. 16**) can be measured in order to determine the bulk temperature of LEDs **801** (**FIG. 8**) mounted on the substrate **1200**. The substrate **1200** is also configured with a relatively significant thermal mass, which stabilizes and normalizes the bulk temperature so that the thermistor measurement of bulk temperature is meaningful.

[**0082**] **FIGS. 13-14** illustrate a substrate **1200** having a component side **1301**, a solder side **1302**, a component end **1305** and a connector end **1306**. Alignment notches **1310** are disposed between the ends **1305**, **1306**. The substrate **1200** further has a component layer **1401**, inner layers **1402-1405** and a solder layer **1406**. The inner layers **1402-1405**, e.g. inner layer **1402** (**FIG. 18**), have substantial metallized areas **1411** that provide a thermal mass **1220** (**FIG. 12**) to stabilize a bulk temperature for the emitter array **700** (**FIG. 12**). The metallized areas **1411** also function to interconnect component pads **1510** and wire bond pads **1520** (**FIG. 15**) to the connector **1530**.

[**0083**] **FIGS. 15-16** illustrate a substrate **1200** having component pads **1510** and wire bond pads **1520** at a component end **1305**. The component pads **1510** mount and electrically connect a first side (anode or cathode) of the LEDs **801** (**FIG. 8**) to the substrate **1200**. Wire bond pads **1520** electrically connect a second side (cathode or anode) of the LEDs **801** (**FIG. 8**) to the substrate **1200**. The connector end **1306** has a connector **1530** with connector pads **1532**, **1534** that mount and electrically connect the emitter assembly **500** (**FIG. 23**), including the substrate **1200**, to the flex circuit **2200** (**FIG. 22**). Substrate layers **1401-1406** (**FIG. 14**) have traces that electrically connect the component pads **1510** and wire bond pads **1520** to the connector **1532-1534**. A thermistor **1540** is mounted to thermistor pads **1550** at the component end **1305**, which are also electrically connected with traces to the connector **1530**. Plated thru holes electrically connect the connector pads **1532**, **1534** on the component and solder sides **1301**, **1302**, respectively.

[**0084**] **FIG. 17** illustrates the electrical layout of a substrate **1200**. A portion of the LEDs **801**, including D1-D4 and D13-D16 have cathodes physically and electrically connected to component pads **1510** (**FIG. 15**) and corresponding anodes wire bonded to wire bond pads **1520**. Another portion of the LEDs **801**, including D5-D8 and D9-D12, have anodes physically and electrically connected to component pads **1510** (**FIG. 15**) and corresponding cathodes wire bonded to wire bond pads **1520**. The connector **1530** has row pinouts J21-J24, column pinouts J31 -J34 and thermistor pinouts J40-J41 for the LEDs **801** and thermistor **1540**.

[**0085**] Interconnect Assembly

[**0086**] **FIG. 19** illustrates an interconnect assembly **1900** that mounts the emitter assembly **500** and detector assembly **2400**, connects to the sensor cable **4400** and provides electrical communications between the cable and each of the emitter assembly **500** and detector assembly **2400**. In one embodiment, the interconnect assembly **1900** is incorporated with the attachment assembly **2700**, which holds the emitter and detector assemblies to a tissue site. An interconnect assembly embodiment utilizing a flexible (flex) circuit is described with respect to **FIGS. 20-24**, below.

[**0087**] **FIG. 20** illustrates an interconnect assembly **1900** embodiment having a circuit substrate **2200**, an emitter mount **2210**, a detector mount **2220** and a cable connector

2230. The emitter mount **2210**, detector mount **2220** and cable connector **2230** are disposed on the circuit substrate **2200**. The emitter mount **2210** is adapted to mount an emitter assembly **500** having multiple emitters. The detector mount **2220** is adapted to mount a detector assembly **2400** having a detector. The cable connector **2230** is adapted to attach a sensor cable **4400**. A first plurality of conductors **2040** disposed on the circuit substrate **2200** electrically interconnects the emitter mount **2210** and the cable connector **2230**. A second plurality of conductors **2050** disposed on the circuit substrate **2200** electrically interconnects the detector mount **2220** and the cable connector **2230**. A decoupling **2060** disposed proximate the cable connector **2230** substantially mechanically isolates the cable connector **2230** from both the emitter mount **2210** and the detector mount **2220** so that sensor cable stiffness is not translated to the emitter assembly **500** or the detector assembly **2400**. A shield **2070** is adapted to fold over and shield one or more wires or pairs of wires of the sensor cable **4400**.

[**0088**] **FIG. 21** illustrates a flex circuit assembly **1900** having a flex circuit **2200**, an emitter assembly **500** and a detector assembly **2400**, which is configured to terminate the sensor end of a sensor cable **4400**. The flex circuit assembly **1900** advantageously provides a structure that electrically connects yet mechanically isolates the sensor cable **4400**, the emitter assembly **500** and the detector assembly **2400**. As a result, the mechanical stiffness of the sensor cable **4400** is not translated to the sensor pads **3000**, **3100** (**FIGS. 30-31**), allowing a comfortable finger attachment for the sensor **200** (**FIG. 1**). In particular, the emitter assembly **500** and detector assembly **2400** are mounted to opposite ends **2201**, **2202** (**FIG. 22**) of an elongated flex circuit **2200**. The sensor cable **4400** is mounted to a cable connector **2230** extending from a middle portion of the flex circuit **2200**. Detector wires **4470** are shielded at the flex circuit junction by a fold-over conductive ink flap **2240**, which is connected to a cable inner shield **4450**. The flex circuit **2200** is described in further detail with respect to **FIG. 22**. The emitter portion of the flex circuit assembly **1900** is described in further detail with respect to **FIG. 23**. The detector assembly **2400** is described with respect to **FIG. 24**. The sensor cable **4400** is described with respect to FIGS. **44**A-B, below.

[**0089**] **FIG. 22** illustrates a sensor flex circuit **2200** having an emitter end **2201**, a detector end **2202**, an elongated interconnect **2204**, **2206** between the ends **2201**, **2202** and a cable connector **2230** extending from the interconnect **2204**, **2206**. The emitter end **2201** forms a "head" having emitter solder pads **2210** for attaching the emitter assembly **500** (**FIG. 6**) and mounting ears **2214** for attaching to the emitter pad **3000** (**FIG. 30B**), as described below. The detector end **2202** has detector solder pads for attaching the detector **2410** (**FIG. 24**). The interconnect **2204** between the emitter end **2201** and the cable connector **2230** forms a "neck," and the interconnect **2206** between the detector end **2202** and the cable connector **2230** forms a "tail." The cable connector **2230** forms "wings" that extend from the interconnect **2204**, **2206** between the neck **2204** and tail **2206**. A conductive ink flap **2240** connects to the cable inner shield **4450** (FIGS. **44**A-B) and folds over to shield the detector wires **4470** (FIGS. **44**A-B) soldered to the detector wire pads **2236**. The outer wire pads **2238** connect to the remaining cable wires **4430** (FIGS. **44**A-B). The flex circuit **2200** has top coverlay, top ink, inner coverlay, trace, trace base, bottom ink and bottom coverlay layers.

[**0090**] The flex circuit **2200** advantageously provides a connection between a multiple wire sensor cable **4400** (FIGS. **44**A-B), a multiple wavelength emitter assembly **500** (**FIG. 6**) and a detector assembly **2400** (**FIG. 24**) without rendering the emitter and detector assemblies unwieldy and stiff. In particular, the wings **2230** provide a relatively large solder pad area **2232** that is narrowed at the neck **2204** and tail **2206** to mechanically isolate the cable **4400** (FIGS. **44**A-B) from the remainder of the flex circuit **2200**. Further, the neck **2206** is folded (see **FIG. 4**) for installation in the emitter pad **3000** (FIGS. **30**A-H) and acts as a flexible spring to further mechanically isolate the cable **4400** (FIGS. **44**A-B) from the emitter assembly **500** (**FIG. 4**). The tail **2206** provides an integrated connectivity path between the detector assembly **2400** (**FIG. 24**) mounted in the detector pad **3100** (FIGS. **31**A-H) and the cable connector **2230** mounted in the opposite emitter pad **3000** (FIGS. **30**A-H).

[**0091**] **FIG. 23** illustrates the emitter portion of the flex circuit assembly **1900** (**FIG. 21**) having the emitter assembly **500**. The emitter assembly connector **1530** is attached to the emitter end **2210** of the flex circuit **2200** (**FIG. 22**). In particular, reflow solder **2330** connects thru hole pads **1532**, **1534** of the emitter assembly **500** to corresponding emitter pads **2310** of the flex circuit **2200** (**FIG. 22**).

[**0092**] **FIG. 24** illustrates a detector assembly **2400** including a detector **2410**, solder pads **2420**, copper mesh tape **2430**, an EMI shield **2440** and foil **2450**. The detector **2410** is soldered **2460** chip side down to detector solder pads **2420** of the flex circuit **2200**. The detector solder joint and detector ground pads **2420** are wrapped with the Kapton tape **2470**. EMI shield tabs **2442** are folded onto the detector pads **2420** and soldered. The EMI shield walls are folded around the detector **2410** and the remaining tabs **2442** are soldered to the back of the EMI shield **2440**. The copper mesh tape **2430** is cut to size and the shielded detector and flex circuit solder joint are wrapped with the copper mesh tape **2430**. The foil **2450** is cut to size with a predetermined aperture **2452**. The foil **2450** is wrapped around shielded detector with the foil side in and the aperture **2452** is aligned with the EMI shield grid **2444**.

[**0093**] Detector Assembly

[**0094**] **FIG. 25** illustrates an alternative detector assembly **2400** embodiment having adjacent detectors. Optical radiation having multiple wavelengths generated by emitters **700** is transmitted into a tissue site **1**. Optical radiation at a first set of wavelengths is detected by a first detector **2510**, such as, for example, a Si detector. Optical radiation at a second set of wavelengths is detected by a second detector **2520**, such as, for example, a GaAs detector.

[**0095**] **FIG. 26** illustrates another alternative detector assembly **2400** embodiment having stacked detectors coaxial along a light path. Optical radiation having multiple wavelengths generated by emitters **700** is transmitted into a tissue site **1**. Optical radiation at a first set of wavelengths is detected by a first detector **2610**. Optical radiation at a second set of wavelengths passes through the first detector **2610** and is detected by a second detector **2620**. In a particular embodiment, a silicon (Si) detector and a gallium arsenide (GaAs) detector are used. The Si detector is placed on top of the GaAs detector so that light must pass through the Si detector before reaching the GaAs detector. The Si detector can be placed directly on top of the GaAs detector

or the Si and GaAs detector can be separated by some other medium, such as a transparent medium or air. In another particular embodiment, a germanium detector is used instead of the GaAs detector. Advantageously, the stacked detector arrangement minimizes error caused by pathlength differences as compared with the adjacent detector embodiment.

[0096] Finger Clip

[0097] **FIG. 27** illustrates a finger clip embodiment **2700** of a physiological sensor attachment assembly. The finger clip **2700** is configured to removably attach an emitter assembly **500** (**FIG. 6**) and detector assembly **2400** (**FIG. 24**), interconnected by a flex circuit assembly **1900**, to a fingertip. The finger clip **2700** has an emitter shell **3800**, an emitter pad **3000**, a detector pad **2800** and a detector shell **3900**. The emitter shell **3800** and the detector shell **3900** are rotatably connected and urged together by the spring assembly **3500**. The emitter pad **3000** is fixedly retained by the emitter shell. The emitter assembly **500** (**FIG. 6**) is mounted proximate the emitter pad **3000** and adapted to transmit optical radiation having a plurality of wavelengths into fingertip tissue. The detector pad **2800** is fixedly retained by the detector shell **3900**. The detector assembly **3500** is mounted proximate the detector pad **2800** and adapted to receive the optical radiation after attenuation by fingertip tissue.

[0098] **FIG. 28** illustrates a detector pad **2800** advantageously configured to position and comfortably maintain a fingertip relative to a detector assembly for accurate sensor measurements. In particular, the detector pad has fingertip positioning features including a guide **2810**, a contour **2820** and a stop **2830**. The guide **2810** is raised from the pad surface **2803** and narrows as the guide **2810** extends from a first end **2801** to a second end **2802** so as to increasingly conform to a fingertip as a fingertip is inserted along the pad surface **2803** from the first end **2801**. The contour **2820** has an indentation defined along the pad surface **2803** generally shaped to conform to a fingertip positioned over a detector aperture **2840** located within the contour **2820**. The stop **2830** is raised from the pad surface **2803** so as to block the end of a finger from inserting beyond the second end **2802**. FIGS. **29**A-B illustrate detector pad embodiments **3100**, **3400** each having a guide **2810**, a contour **2820** and a stop **2830**, described in further detail with respect to **FIGS. 31 and 34**, respectively.

[0099] FIGS. **30**A-H illustrate an emitter pad **3000** having emitter pad flaps **3010**, an emitter window **3020**, mounting pins **3030**, an emitter assembly cavity **3040**, isolation notches **3050**, a flex circuit notch **3070** and a cable notch **3080**. The emitter pad flaps **3010** overlap with detector pad flaps **3110** (FIGS. **31**A-H) to block ambient light. The emitter window **3020** provides an optical path from the emitter array **700** (**FIG. 8**) to a tissue site. The mounting pins **3030** accommodate apertures in the flex circuit mounting ears **2214** (**FIG. 22**), and the cavity **3040** accommodates the emitter assembly **500** (**FIG. 21**). Isolation notches **3050** mechanically decouple the shell attachment **3060** from the remainder of the emitter pad **3000**. The flex circuit notch **3070** accommodates the flex circuit tail **2206** (**FIG. 22**) routed to the detector pad **3100** (FIGS. **31**A-H). The cable notch **3080** accommodates the sensor cable **4400** (FIGS. **44**A-B). FIGS. **33**A-H illustrate an alternative slim finger emitter pad **3300** embodiment.

[0100] FIGS. **31**A-H illustrate a detector pad **3100** having detector pad flaps **3110**, a shoe box cavity **3120** and isolation notches **3150**. The detector pad flaps **3110** overlap with emitter pad flaps **3010** (FIGS. **30**A-H), interleaving to block ambient light. The shoe box cavity **3120** accommodates a shoe box **3200** (**FIG. 32A**-H) described below. Isolation notches **3150** mechanically decouple the attachment points **3160** from the remainder of the detector pad **3100**. FIGS. **34**A-H illustrate an alternative slim finger detector pad **3400** embodiment.

[0101] FIGS. **32**A-H illustrate a shoe box **3200** that accommodates the detector assembly **2400** (**FIG. 24**). A detector window **3210** provides an optical path from a tissue site to the detector **2410** (**FIG. 24**). A flex circuit notch **3220** accommodates the flex circuit tail **2206** (**FIG. 22**) routed from the emitter pad **3000** (FIGS. **30**A-H). In one embodiment, the shoe box **3200** is colored black or other substantially light absorbing color and the emitter pad **3000** and detector pad **3100** are each colored white or other substantially light reflecting color.

[0102] **FIGS. 35- 37** illustrate a spring assembly **3500** having a spring **3600** configured to urge together an emitter shell **3800** (**FIG. 46**) and a detector shell **3900**. The detector shell is rotatably connected to the emitter shell. The spring is disposed between the shells **3800**, **3900** and adapted to create a pivot point along a finger gripped between the shells that is substantially behind the fingertip. This advantageously allows the shell hinge **3810**, **3910** (**FIGS. 38-39**) to expand so as to distribute finger clip force along the inserted finger, comfortably keeping the fingertip in position over the detector without excessive force.

[0103] As shown in FIGS. **36**A-C, the spring **3600** has coils **3610**, an emitter shell leg **3620** and a detector shell leg **3630**. The emitter shell leg **3620** presses against the emitter shell **3800** (FIGS. **38**A-D) proximate a grip **3820** (FIGS. **38**A-D). The detector shell legs **3630** extend along the detector shell **3900** (FIGS. **39**A-D) to a spring plate **3700** (FIGS. **37**A-D) attachment point. The coil **3610** is secured by hinge pins **410** (**FIG. 46**) and is configured to wind as the finger clip is opened, reducing its diameter and stress accordingly.

[0104] As shown in FIGS. **37**A-D the spring plate **3700** has attachment apertures **3710**, spring leg slots **3720**, and a shelf **3730**. The attachment apertures **3710** accept corresponding shell posts **3930** (FIGS. **39**A-D) so as to secure the spring plate **3700** to the detector shell **3900** (**FIG. 39A**-D). Spring legs **3630** (**FIG. 36A**-C) are slidably anchored to the detector shell **3900** (**FIG. 39A**-D) by the shelf **3730**, advantageously allowing the combination of spring **3600**, shells **3800**, **3900** and hinges **3810**, **3910** to adjust to various finger sizes and shapes.

[0105] **FIGS. 38- 39** illustrate the emitter and detector shells **3800**, **3900**, respectively, having hinges **3810**, **3910** and grips **3820**, **3920**. Hinge apertures **3812**, **3912** accept hinge pins **410** (**FIG. 46**) so as to create a finger clip. The detector shell hinge aperture **3912** is elongated, allowing the hinge to expand to accommodate a finger.

[0106] Monitor And Sensor

[0107] **FIG. 40** illustrates a monitor **100** and a corresponding sensor assembly **200**, as described generally with respect to **FIGS. 1-3**, above. The sensor assembly **200** has a sensor

400 and a sensor cable **4400**. The sensor **400** houses an emitter assembly **500** having emitters responsive to drivers within a sensor controller **4500** so as to transmit optical radiation into a tissue site. The sensor **400** also houses a detector assembly **2400** that provides a sensor signal **2500** responsive to the optical radiation after tissue attenuation. The sensor signal **2500** is filtered, amplified, sampled and digitized by the front-end **4030** and input to a DSP (digital signal processor) **4040**, which also commands the sensor controller **4500**. The sensor cable **4400** electrically communicates drive signals from the sensor controller **4500** to the emitter assembly **500** and a sensor signal **2500** from the detector assembly **2400** to the front-end **4030**. The sensor cable **4400** has a monitor connector **210** that plugs into a monitor sensor port **110**.

[**0108**] In one embodiment, the monitor **100** also has a reader **4020** capable of obtaining information from an information element (IE) in the sensor assembly **200** and transferring that information to the DSP **4040**, to another processor or component within the monitor **100**, or to an external component or device that is at least temporarily in communication with the monitor **100**. In an alternative embodiment, the reader function is incorporated within the DSP **4040**, utilizing one or more of DSP I/O, ADC, DAC features and corresponding processing routines, as examples.

[**0109**] In one embodiment, the monitor connector **210** houses the information element **4000**, which may be a memory device or other active or passive electrical component. In a particular embodiment, the information element **4000** is an EPROM, or other programmable memory, or an EEPROM, or other reprogrammable memory, or both. In an alternative embodiment, the information element **4000** is housed within the sensor **400**, or an information element **4000** is housed within both the monitor connector **4000** and the sensor **400**. In yet another embodiment, the emitter assembly **500** has an information element **4000**, which is read in response to one or more drive signals from the sensor controller **4500**, as described with respect to **FIGS. 41-43**, below. In a further embodiment, a memory information element is incorporated into the emitter array **700** (**FIG. 8**) and has characterization information relating to the LEDs **801** (**FIG. 8**). In one advantageous embodiment, trend data relating to slowly varying parameters, such as perfusion index, HbCO or METHb, to name a few, are stored in an IE memory device, such as EEPROM.

[**0110**] Back-To-Back LEDs

[**0111**] **FIGS. 41-43** illustrate alternative sensor embodiments. A sensor controller **4500** configured to activate an emitter array **700** (**FIG. 7**) arranged in an electrical grid, is described with respect to **FIG. 7**, above. Advantageously, a sensor controller **4500** so configured is also capable of driving a conventional two-wavelength (red and IR) sensor **4100** having back-to-back LEDs **4110**, **4120** oran information element **4300** or both.

[**0112**] **FIG. 41A** illustrates a sensor **4100** having an electrical grid **4130** configured to activate light emitting sources by addressing at least one row conductor and at least one column conductor. A first LED **4110** and a second LED **4120** are configured in a back-to-back arrangement so that a first contact **4152** is connected to a first LED **4110** cathode and a second LED **4120** anode and a second contact **4154** is connected to a first LED **4110** anode and a second LED **4120** cathode. The first contact **4152** is in communications with a first row conductor **4132** and a first column conductor **4134**. The second contact is in communications with a second row conductor **4136** and a second column conductor **4138**. The first LED **4110** is activated by addressing the first row conductor **4132** and the second column conductor **4138**. The second LED **4120** is activated by addressing the second row conductor **4136** and the first column conductor **4134**.

[**0113**] **FIG. 41 B** illustrates a sensor cable **4400** embodiment capable of communicating signals between a monitor **100** and a sensor **4100**. The cable **4400** has a first row input **4132**, a first column input **4134**, a second row input **4136** and a second column input **4138**. A first output **4152** combines the first row input **4132** and the first column input **4134**. A second output **4154** combines a second row input **4136** and second column input **4138**.

[**0114**] **FIG. 41C** illustrates a monitor **100** capable of communicating drive signals to a sensor **4100**. The monitor **4400** has a first row signal **4132**, a first column signal **4134**, a second row signal **4136** and a second column signal **4138**. A first output signal **4152** combines the first row signal **4132** and the first column signal **4134**. A second output signal **4154** combines a second row signal **4136** and second column signal **4138**.

[**0115**] Information Elements

[**0116**] **FIGS. 42- 43** illustrate information element **4200-4300** embodiments in communications with emitter array drivers configured to activate light emitters connected in an electrical grid. The information elements are configured to provide information as DC values, AC values or a combination of DC and AC values in response corresponding DC, AC or combination DC and AC electrical grid drive signals. **FIG. 42** illustrates information element embodiment **4200** advantageously driven directly by an electrical grid having rows **710** and columns **720**. In particular, the information element **4200** has a series connected resistor R_2 **4210** and diode **4220** connected between a row line **710** and a column line **720** of an electrical grid. In this manner, the resistor R_2 value can be read in a similar manner that LEDs **810** (**FIG. 8**) are activated. The diode **4220** is oriented, e.g. anode to row and cathode to column as the LEDs so as to prevent parasitic currents from unwanted activation of LEDs **810** (**FIG. 8**).

[**0117**] FIGS. **43**A-C illustrate other embodiments where the value of R_1 is read with a DC grid drive current and a corresponding grid output voltage level. In other particular embodiments, the combined values of R_1, R_2 and C or, alternatively, R_1, R_2 and L are read with a varying (AC) grid drive currents and a corresponding grid output voltage waveform. As one example, a step in grid drive current is used to determine component values from the time constant of a corresponding rise in grid voltage. As another example, a sinusoidal grid drive current is used to determine component values from the magnitude or phase or both of a corresponding sinusoidal grid voltage. The component values determined by DC or AC electrical grid drive currents can represent sensor types, authorized suppliers or manufacturers, emitter wavelengths among others. Further, a diode D (**FIG. 43C**) can be used to provide one information element reading R_1 at one drive level or polarity and another

information element reading, combining R_1 and R_2, at a second drive level or polarity, i.e. when the diode is forward biased.

[0118] Passive information element **4300** embodiments may include any of various combinations of resistors, capacitors or inductors connected in series and parallel, for example. Other information element **4300** embodiments connected to an electrical grid and read utilizing emitter array drivers incorporate other passive components, active components or memory components, alone or in combination, including transistor networks, PROMs, ROMs, EPROMs, EEPROMs, gate arrays and PLAs to name a few.

[0119] Sensor Cable

[0120] FIGS. **44**A-B illustrate a sensor cable **4400** having an outer jacket **4410**, an outer shield **4420**, multiple outer wires **4430**, an inner jacket **4440**, an inner shield **4450**, a conductive polymer **4460** and an inner twisted wire pair **4470**. The outer wires **4430** are advantageously configured to compactly carry multiple drive signals to the emitter array **700** (**FIG. 7**). In one embodiment, there are twelve outer wires **4430** corresponding to four anode drive signals **4501** (**FIG. 45**), four cathode drive signals **4502** (**FIG. 45**), two thermistor pinouts **1450** (**FIG. 15**) and two spares. The inner twisted wire pair **4470** corresponds to the sensor signal **2500** (**FIG. 25**) and is extruded within the conductive polymer **4460** so as to reduce triboelectric noise. The shields **4420**, **4450** and the twisted pair **4470** boost EMI and crosstalk immunity for the sensor signal **2500** (**FIG. 25**).

[0121] Controller

[0122] **FIG. 45** illustrates a sensor controller **4500** located in the monitor **100** (**FIG. 1**) and configured to provide anode drive signals **4501** and cathode drive signals **4502** to the emitter array **700** (**FIG. 7**). The DSP (digital signal processor) **4040**, which performs signal processing functions for the monitor, also provides commands **4042** to the sensor controller **4500**. These commands determine drive signal **4501**, **4502** levels and timing. The sensor controller **4500** has a command register **4510**, an anode selector **4520**, anode drivers **4530**, current DACs (digital-to-analog converters) **4540**, a current multiplexer **4550**, cathode drivers **4560**, a current meter **4570** and a current limiter **4580**. The command register **4510** provides control signals responsive to the DSP commands **4042**. In one embodiment, the command register **4510** is a shift register that loads serial command data **4042** from the DSP **4040** and synchronously sets output bits that select or enable various functions within the sensor controller **4500**, as described below.

[0123] As shown in **FIG. 45**, the anode selector **4520** is responsive to anode select **4516** inputs from the command register **4510** that determine which emitter array row **810** (**FIG. 8**) is active. Accordingly, the anode selector **4520** sets one of the anode on **4522** outputs to the anode drivers **4530**, which pulls up to Vcc one of the anode outputs **4501** to the emitter array **700** (**FIG. 8**).

[0124] Also shown in **FIG. 45**, the current DACs **4540** are responsive to command register data **4519** that determines the currents through each emitter array column **820** (**FIG. 8**). In one embodiment, there are four, 12-bit DACs associated with each emitter array column **820** (**FIG. 8**), sixteen DACs in total. That is, there are four DAC outputs **4542** associated with each emitter array column **820** (**FIG. 8**) corresponding to the currents associated with each row **810** (**FIG. 8**) along that column **820** (**FIG. 8**). In a particular embodiment, all sixteen DACs **4540** are organized as a single shift register, and the command register **4510** serially clocks DAC data **4519** into the DACs **4540**. A current multiplexer **4550** is responsive to cathode on **4518** inputs from the command register **4510** and anode on **4522** inputs from the anode selector **4520** so as to convert the appropriate DAC outputs **4542** to current set **4552** inputs to the cathode drivers **4560**. The cathode drivers **4560** are responsive to the current set **4552** inputs to pull down to ground one to four of the cathode outputs **4502** to the emitter array **700** (**FIG. 8**).

[0125] The current meter **4570** outputs a current measure **4572** that indicates the total LED current driving the emitter array **700** (**FIG. 8**). The current limiter **4580** is responsive to the current measure **4572** and limits specified by the command register **4510** so as to prevent excessive power dissipation by the emitter array **700** (**FIG. 8**). The current limiter **4580** provides an enable **4582** output to the anode selector **4520**. A Hi Limit **4512** input specifies the higher of two preset current limits. The current limiter **4580** latches the enable **4582** output in an off condition when the current limit is exceeded, disabling the anode selector **4520**. A trip reset **4514** input resets the enable **4582** output to re-enable the anode selector **4520**.

[0126] Sensor Assembly

[0127] As shown in **FIG. 46**, the sensor **400** has an emitter shell **3800**, an emitter pad **3000**, a flex circuit assembly **2200**, a detector pad **3100** and a detector shell **3900**. A sensor cable **4400** attaches to the flex circuit assembly **2200**, which includes a flex circuit **2100**, an emitter assembly **500** and a detector assembly **2400**. The portion of the flex circuit assembly **2200** having the sensor cable **4400** attachment and emitter assembly **500** is housed by the emitter shell **3800** and emitter pad **3000**. The portion of the flex circuit assembly **2200** having the detector assembly **2400** is housed by the detector shell **3900** and detector pad **3100**. In particular, the detector assembly **2400** inserts into a shoe **3200**, and the shoe **3200** inserts into the detector pad **3100**. The emitter shell **3800** and detector shell **3900** are fastened by and rotate about hinge pins **410**, which insert through coils of a spring **3600**. The spring **3600** is held to the detector shell **3900** with a spring plate **3700**. A finger stop **450** attaches to the detector shell. In one embodiment, a silicon adhesive **420** is used to attach the pads **3000**, **3100** to the shells **3800**, **3900**, a silicon potting compound **430** is used to secure the emitter and detector assemblies **500**, **2400** within the pads **3000**, **3100**, and a cyanoacrylic adhesive **440** secures the sensor cable **4400** to the emitter shell **3800**.

[0128] A multiple wavelength sensor has been disclosed in detail in connection with various embodiments. These embodiments are disclosed by way of examples only and are not to limit the scope of the claims that follow. One of ordinary skill in art will appreciate many variations and modifications.

What is claimed is:

1. A physiological sensor comprising:

a plurality of light emitting sources, each light emitting source activated by addressing at least one of a plurality of rows and at least one of a plurality of columns of an electrical grid, the light emitting sources capable of transmitting light of a plurality of wavelengths; and

a detector responsive to the transmitted light after attenuation by body tissue.

2. The physiological sensor according to claim 1 wherein multiple ones of the light emitting sources are capable of

transmitting light of the same wavelength, the multiple ones simultaneously activated by addressing one of the rows.

3. The physiological sensor according to claim 2 wherein:

the light emitting sources are LEDs, and

each of the LEDs have an anode in common with one of the rows and a cathode in common with one of the columns so that driving one of the rows and one of the columns activates a unique one of the LEDs.

4. The physiological sensor according to claim 3 further comprising:

a plurality of row drivers in communication with the rows; and

a plurality of column drivers in communication with the columns,

wherein a selected row driver sources current to a corresponding row and selected column driver sinks current from a corresponding column so as to activate an addressed one of the LEDs.

5. The physiological sensor according to claim 4 wherein deselected ones of the row drivers pull corresponding rows to a low voltage and deselected ones of the column drivers pull corresponding columns to a high voltage so as to substantially block parasitic current from unaddressed ones of the LEDs.

6. The physiological sensor according to claim 5 wherein the electrical grid comprises at least three rows or at least three columns.

7. The physiological sensor according to claim 5 wherein the electrical grid communicates with at least eight LEDs.

8. The physiological sensor according to claim 5 wherein the electrical grid comprises four rows and four columns in communication with up to sixteen of LEDs.

9. A physiological sensor comprising:

a plurality of light emitting sources capable of transmitting light of a plurality of wavelengths, each including a first contact and a second contact, the first contacts of a first set of the plurality of light emitting sources in communication with a first conductor and the second contacts of a second set of the plurality of light emitting sources in communication with a second conductor; and

a detector capable of detecting the transmitted light attenuated by body tissue and outputting a signal indicative of at least one physiological parameter of the body tissue.

wherein at least one light emitting source of the first set and at least one light emitting source of the second set are not common to the first and second sets, and

wherein each of the first set and the second set comprises at least two of the light emitting sources.

10. The physiological sensor according to claim 9 further comprising:

a plurality of row conductors and a plurality of column conductors of an electrical grid,

wherein the second contacts of the first set are in communication with the column conductors and the first contacts of the second set are in communication with the row conductors so that driving one of the row conductors and one of the column conductors activates one of the light emitting sources.

11. The physiological sensor according to claim 10 wherein:

the electrical grid comprises four row conductors and four column conductors, and

the light emitting sources comprise up to sixteen LEDs.

12. The physiological sensor according to claim 10 wherein a subset of the first set of the light emitting sources are capable of transmitting light having the same wavelength and are capable of being simultaneously activated.

13. The physiological sensor according to claim 9 wherein:

the light emitting sources are LEDs,

the first contacts of the LEDs are anode contacts, and

the second contacts of the LEDs are cathode contacts.

14. The physiological sensor according to claim 13 further comprising:

a first push-pull driver in communications with the first conductor; and

a second push-pull driver in communications with the second conductor,

wherein the first push-pull driver is adapted to source current to the anode contacts and the second push-pull driver is adapted to sink current from the cathode contacts so as to activate one of the LEDs, and

wherein the first push-pull driver is adapted to sink current and the second push-pull driver is adapted to source current so as to back bias deactivated LEDs.

15. A physiological sensor method comprising:

sequentially addressing a plurality of light emitting sources using a plurality of conductors of an electrical grid so as to emit light having a plurality of wavelengths that when attenuated by body tissue is indicative of at least one physiological characteristic; and

detecting the emitted light after attenuation by body tissue.

16. The method according to claim 15 further comprising connecting one of each of the light emitting sources at a unique junction of the electrical grid.

17. The method according to claim 16 further comprising:

addressing a row one of the conductors; and

addressing a column one of the conductors,

wherein the light emitting source connected between the addressed row and the addressed column is activated.

18. The method according to claim 17 further comprising push/pull driving activated ones of the light emitting sources.

19. The method according to claim 18 further comprising back biasing deactivated ones of the light emitting sources.

20. The method according to claim 19 further comprising:

providing a plurality of same wavelength ones of the light emitting sources; and

simultaneously addressing the same wavelength light emitting sources.

* * * * *