US 20110187245A1

(19) United States

(12) Patent Application Publication

(10) Pub. No.: US 2011/0187245 A1

(43) Pub. Date: Aug. 4, 2011

Pakula et al.

(54) **PROTECTION AND ASSEMBLY OF OUTER GLASS SURFACES OF AN ELECTRONIC DEVICE HOUSING**

(76) Inventors: **David Pakula**, San Francisco, CA (US); **Richard Hung Minh Dinh**, Cupertino, CA (US); **Tan Yew Tan**, San Francisco, CA (US)

(21) Appl. No.: **12/794,617**

(22) Filed: **Jun. 4, 2010**

Related U.S. Application Data

(60) Provisional application No. 61/325,801, filed on Apr. 19, 2010, provisional application No. 61/300,780, filed on Feb. 2, 2010.

Publication Classification

(51) **Int. Cl.**
H05K 5/02 (2006.01)

(52) **U.S. Cl.** **312/223.1**

(57) **ABSTRACT**

Improved housings for electronic devices are disclosed. An electronic device housing can make use of at least one outer member (e.g., cover) that can be aligned, protected and/or secured with respect to other portions of the housing for the electronic device. In one embodiment, an electronic device housing can have one or more outer members (e.g., exposed major surfaces), such as front or back surfaces, that are formed of glass. Protective sides can be provided in some embodiments to protect the edges of the one or more glass surfaces so as to dissipate impact forces and thus reduce damage to the electronic device housing. The one or more glass surfaces can be part of outer member assemblies that can be secured to other portions of the electronic device housing. The electronic device can be portable and in some cases handheld.

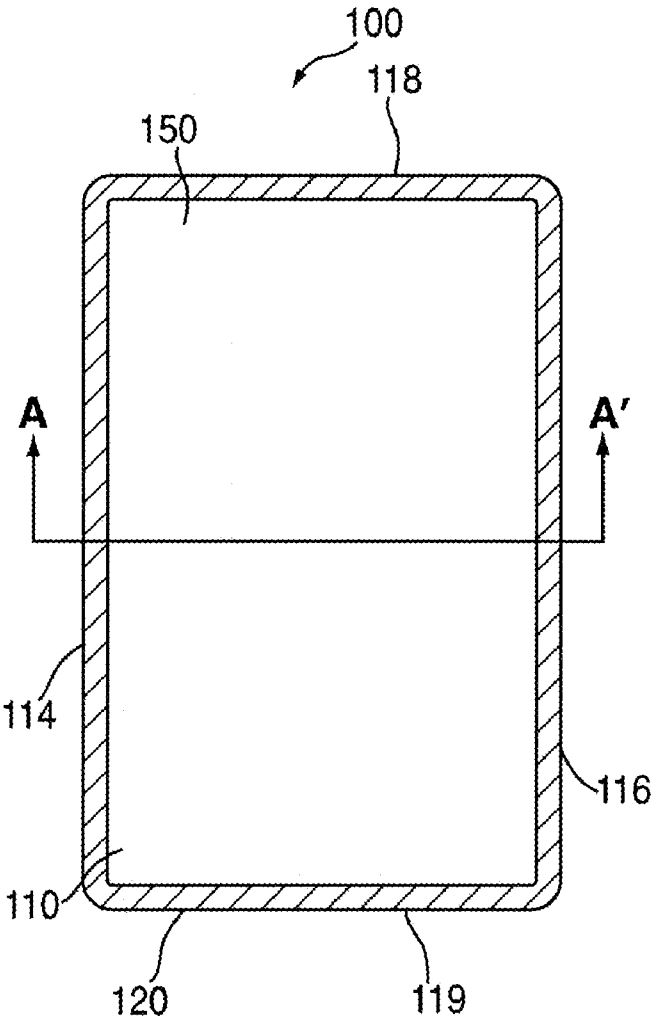

APPLE 1113
Apple v. Masimo
IPR2024-00294

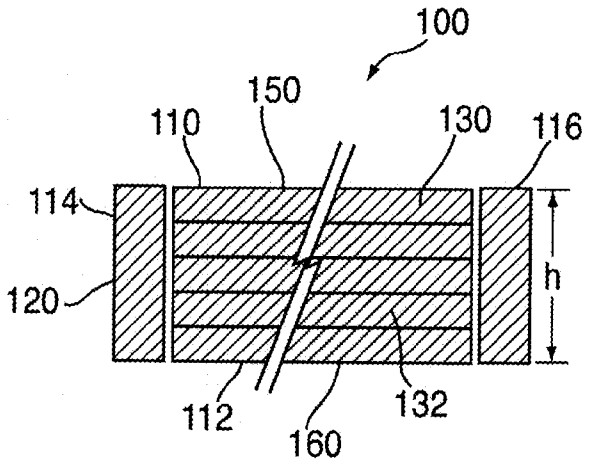
100
150
110
130
116
114
120
h
112
160
132

FIG. 1A

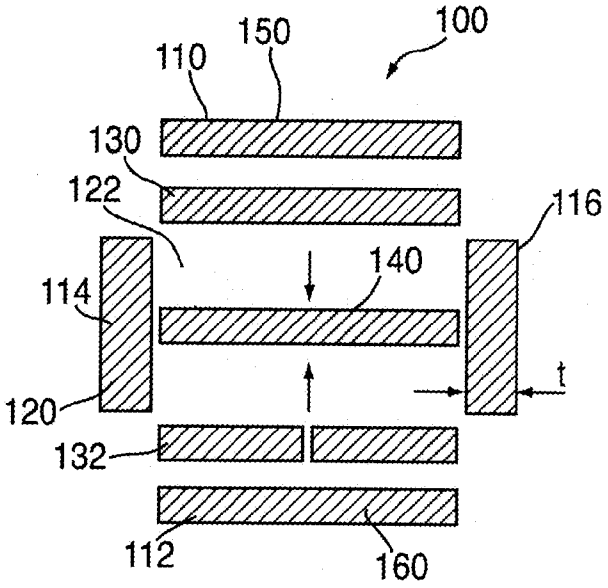
100
150
110
130
122
116
140
114
t
120
132
112
160

FIG. 1B

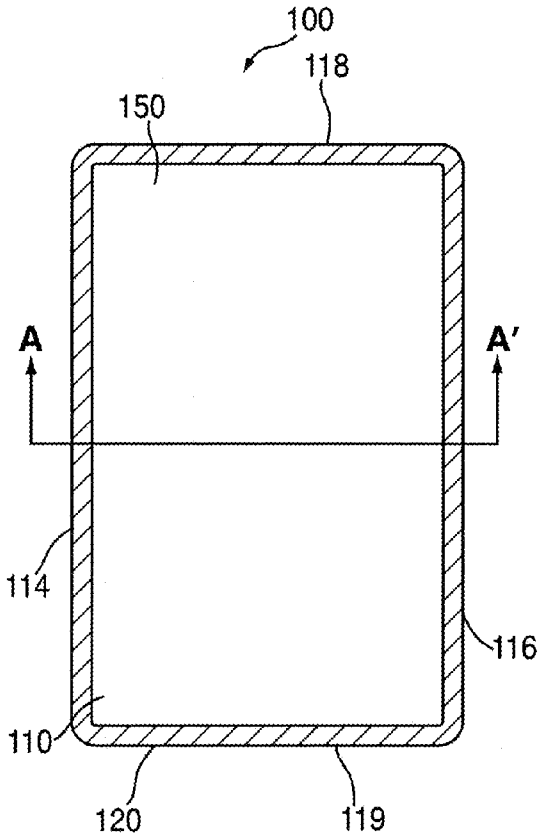
100
118
150
A
A'
114
116
110
120
119

FIG. 1C

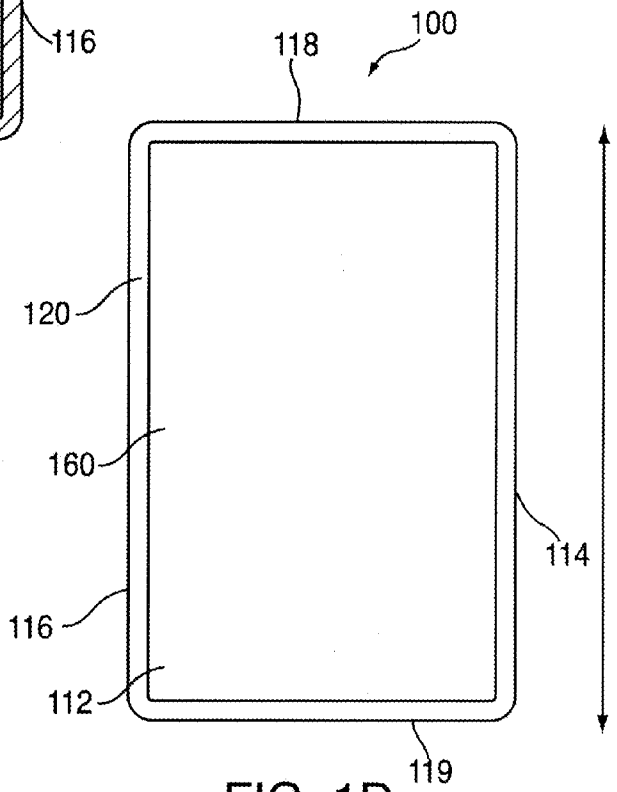
118
100
120
160
114
116
112
119

FIG. 1D

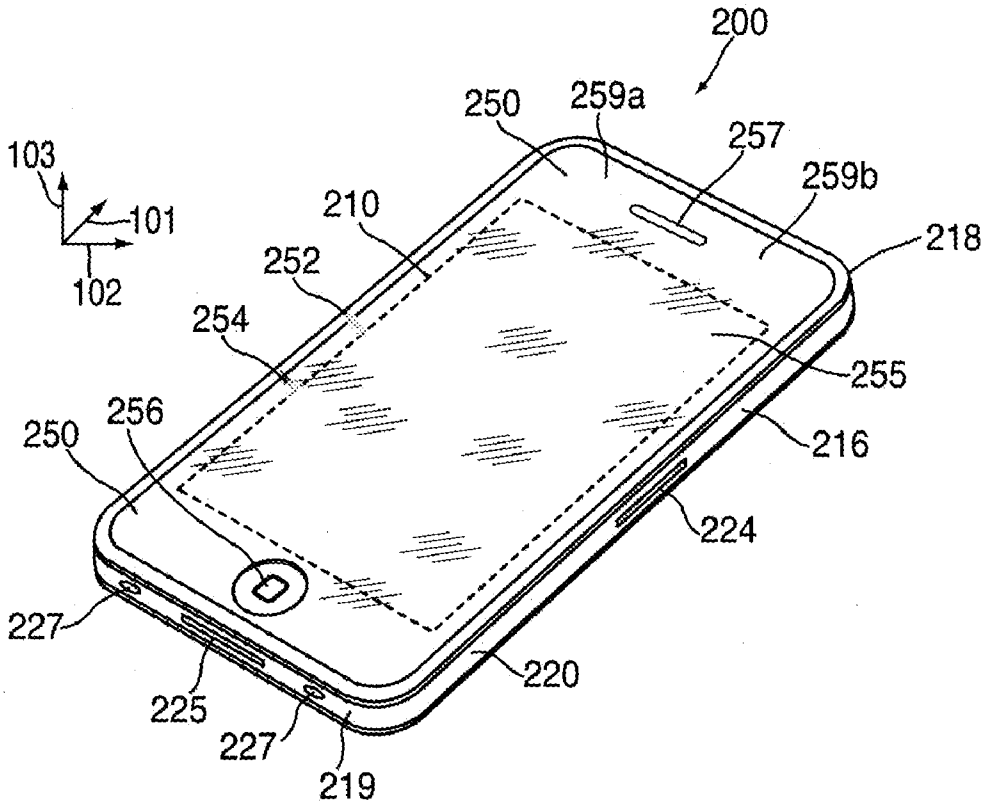
200
250
259a
257
259b
103
101
102
210
218
252
254
255
256
250
216
224
227
220
225
227
219

FIG. 2A

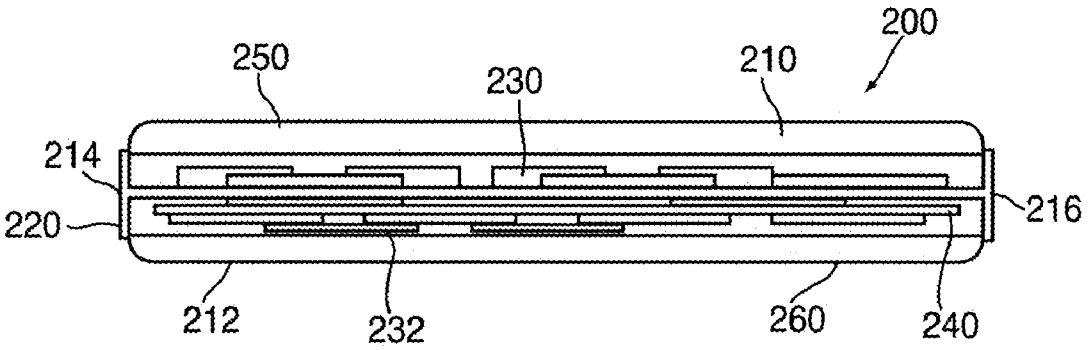
200
250
230
210
214
220
216
212
232
260
240

FIG. 2C

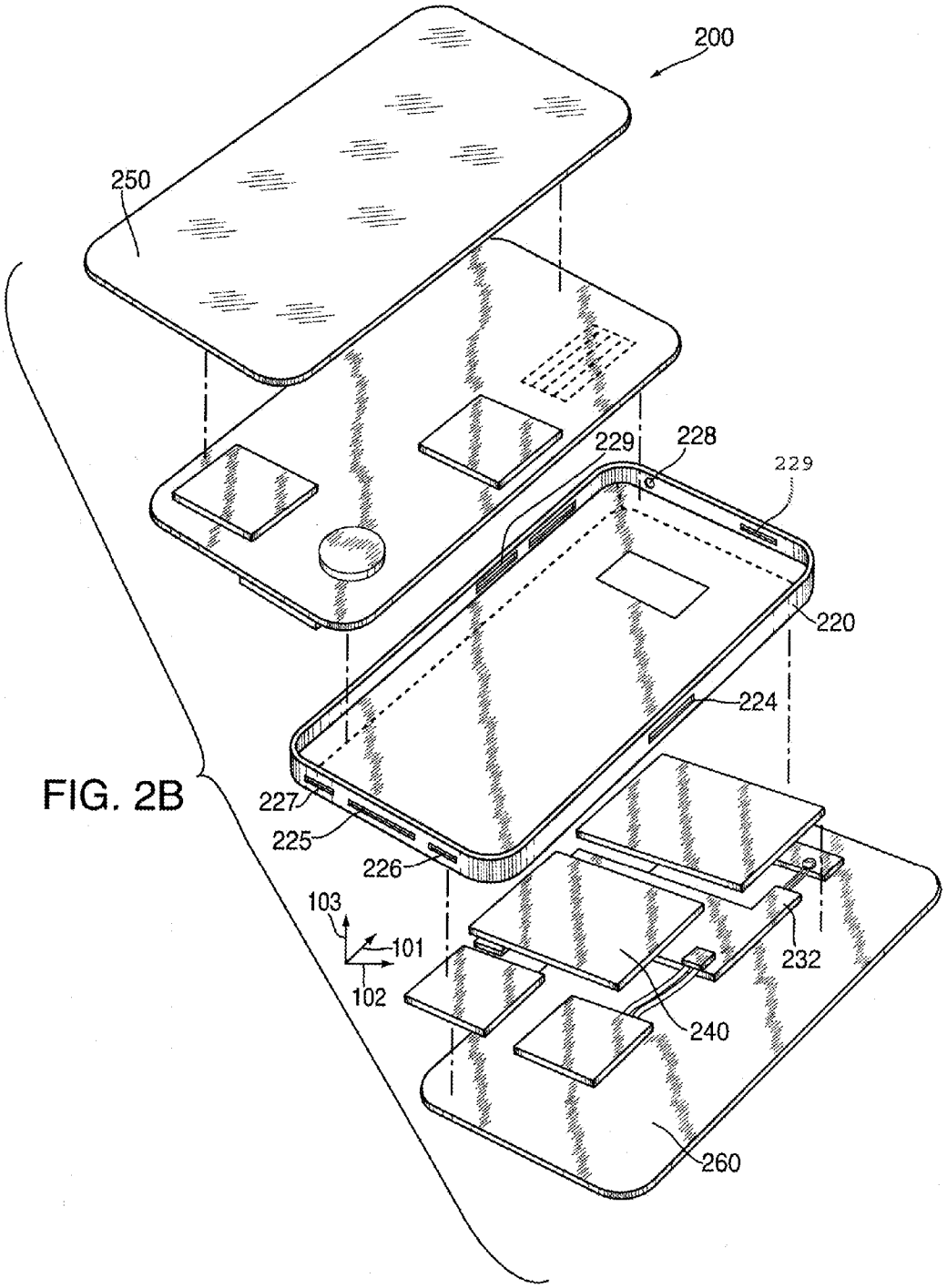

FIG. 2B

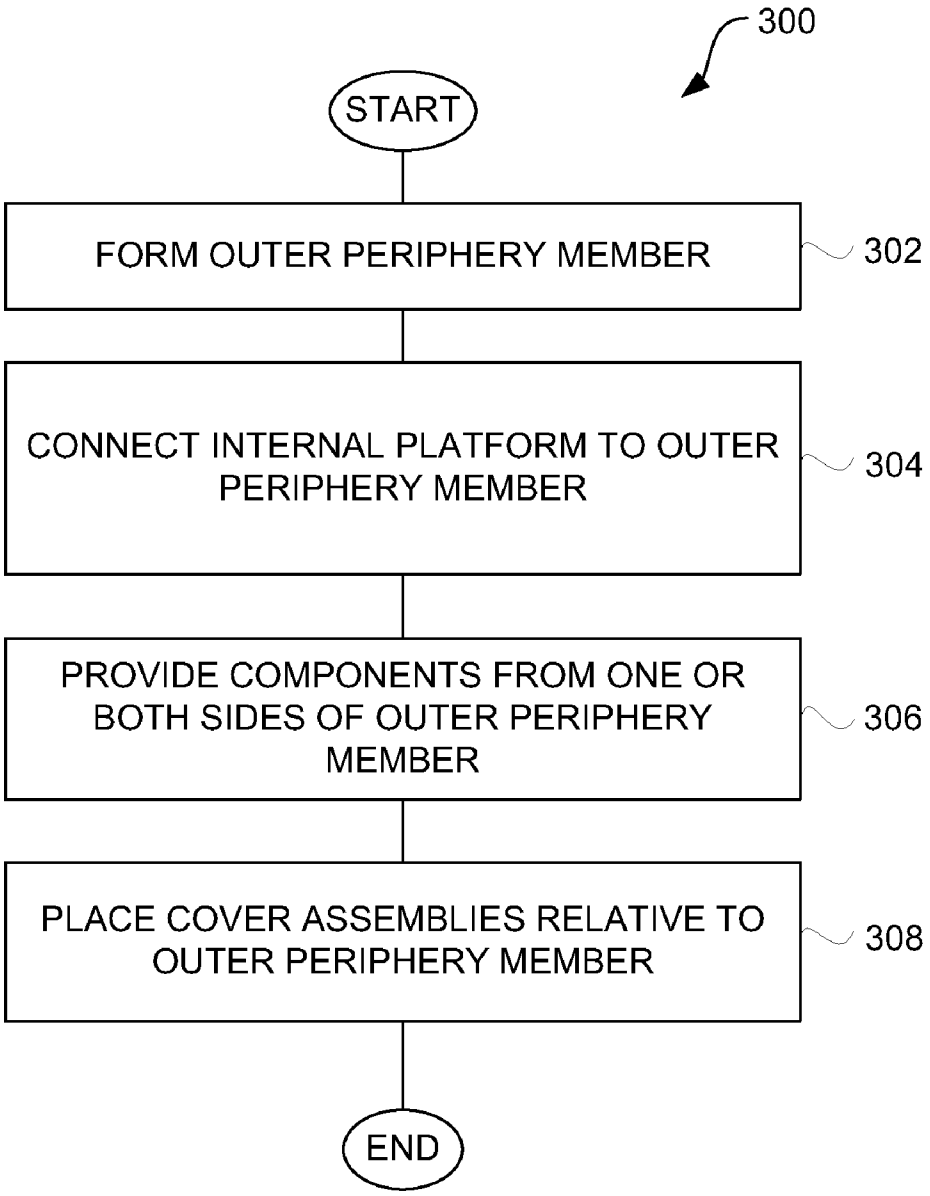
300
START
FORM OUTER PERIPHERY MEMBER
302
CONNECT INTERNAL PLATFORM TO OUTER PERIPHERY MEMBER
304
PROVIDE COMPONENTS FROM ONE OR BOTH SIDES OF OUTER PERIPHERY MEMBER
306
PLACE COVER ASSEMBLIES RELATIVE TO OUTER PERIPHERY MEMBER
308
END

FIG. 3

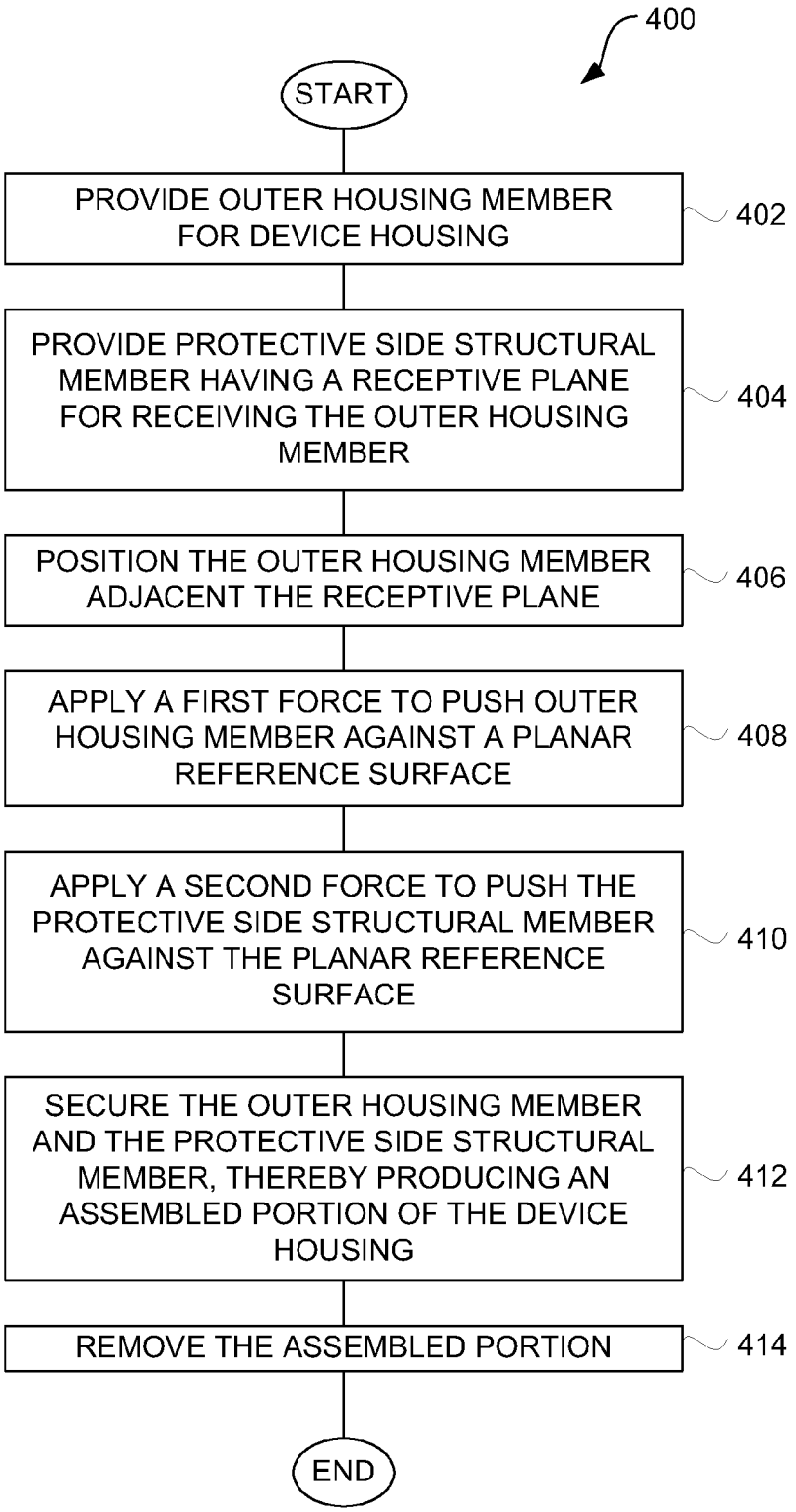
400
START
PROVIDE OUTER HOUSING MEMBER FOR DEVICE HOUSING
402
PROVIDE PROTECTIVE SIDE STRUCTURAL MEMBER HAVING A RECEPTIVE PLANE FOR RECEIVING THE OUTER HOUSING MEMBER
404
POSITION THE OUTER HOUSING MEMBER ADJACENT THE RECEPTIVE PLANE
406
APPLY A FIRST FORCE TO PUSH OUTER HOUSING MEMBER AGAINST A PLANAR REFERENCE SURFACE
408
APPLY A SECOND FORCE TO PUSH THE PROTECTIVE SIDE STRUCTURAL MEMBER AGAINST THE PLANAR REFERENCE SURFACE
410
SECURE THE OUTER HOUSING MEMBER AND THE PROTECTIVE SIDE STRUCTURAL MEMBER, THEREBY PRODUCING AN ASSEMBLED PORTION OF THE DEVICE HOUSING
412
REMOVE THE ASSEMBLED PORTION
414
END

FIG. 4

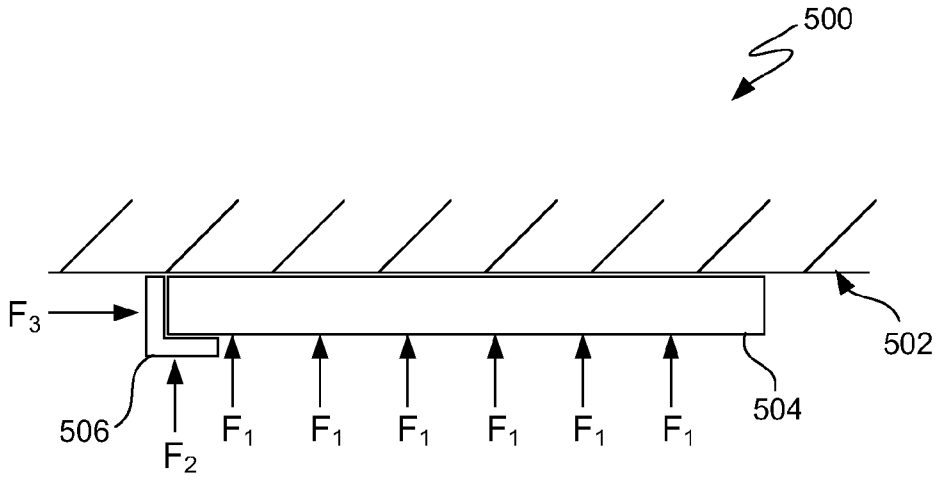

FIG. 5

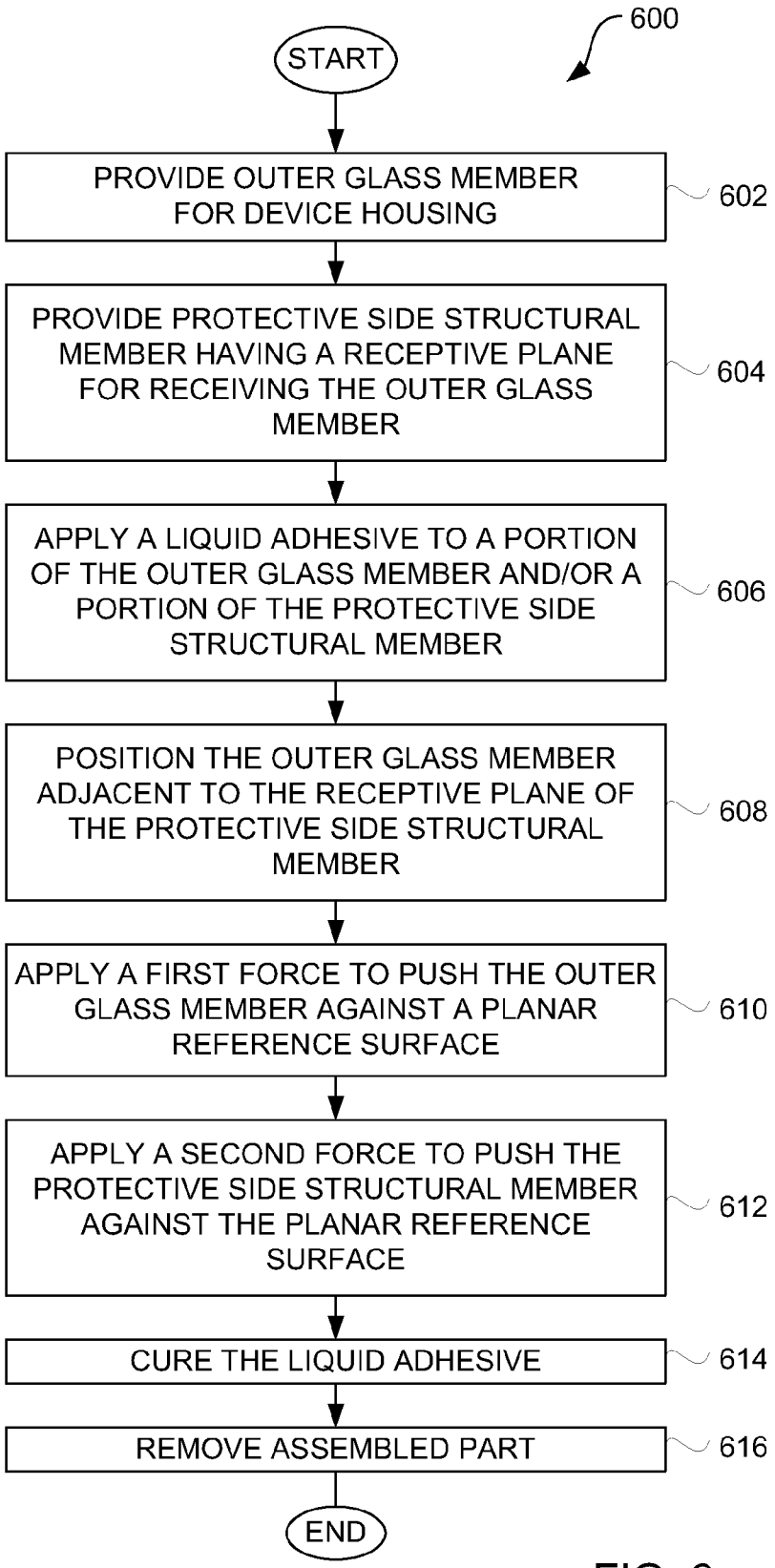
600
START
PROVIDE OUTER GLASS MEMBER FOR DEVICE HOUSING
602
PROVIDE PROTECTIVE SIDE STRUCTURAL MEMBER HAVING A RECEPTIVE PLANE FOR RECEIVING THE OUTER GLASS MEMBER
604
APPLY A LIQUID ADHESIVE TO A PORTION OF THE OUTER GLASS MEMBER AND/OR A PORTION OF THE PROTECTIVE SIDE STRUCTURAL MEMBER
606
POSITION THE OUTER GLASS MEMBER ADJACENT TO THE RECEPTIVE PLANE OF THE PROTECTIVE SIDE STRUCTURAL MEMBER
608
APPLY A FIRST FORCE TO PUSH THE OUTER GLASS MEMBER AGAINST A PLANAR REFERENCE SURFACE
610
APPLY A SECOND FORCE TO PUSH THE PROTECTIVE SIDE STRUCTURAL MEMBER AGAINST THE PLANAR REFERENCE SURFACE
612
CURE THE LIQUID ADHESIVE
614
REMOVE ASSEMBLED PART
616
END

FIG. 6

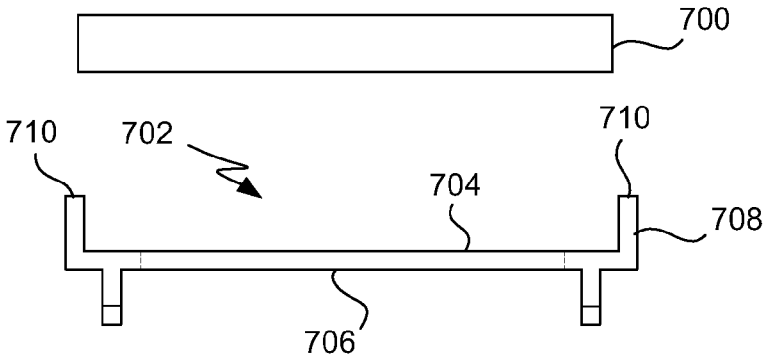

FIG. 7A

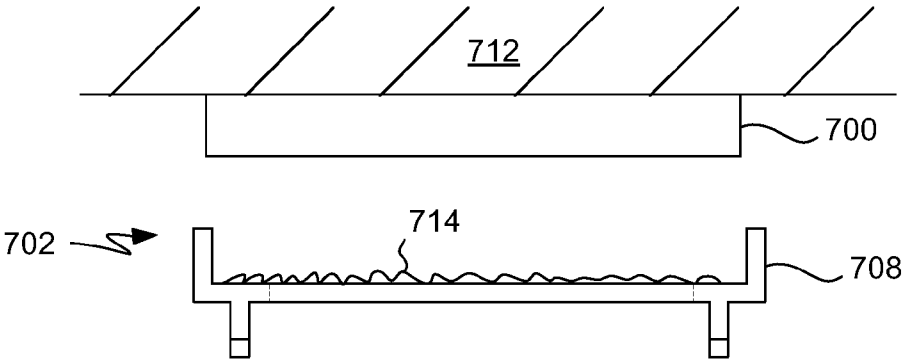

FIG. 7B

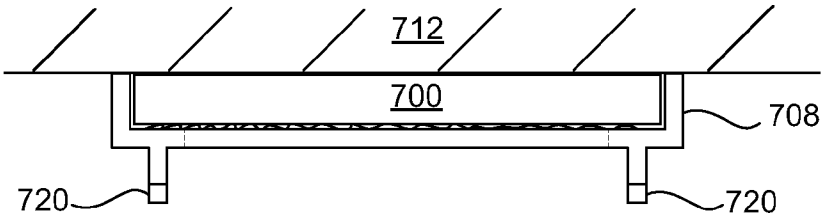

FIG. 7C

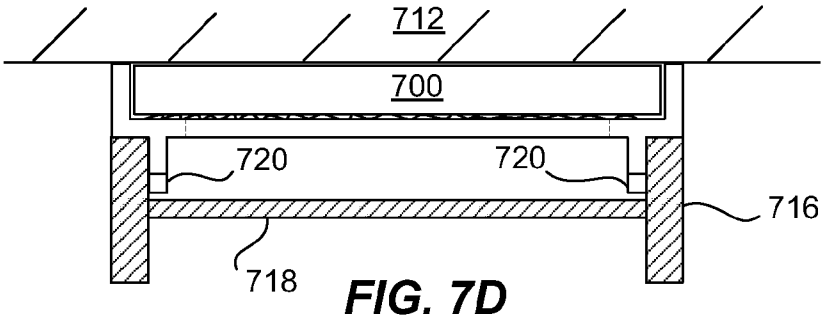

FIG. 7D

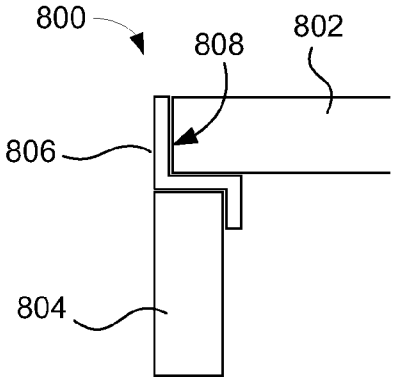

FIG. 8A

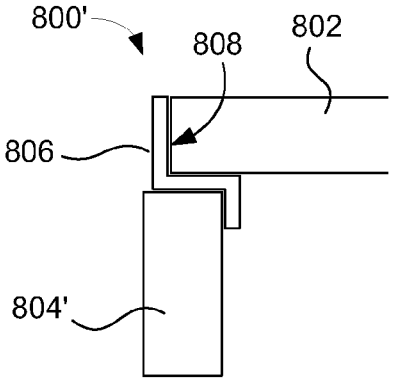

FIG. 8B

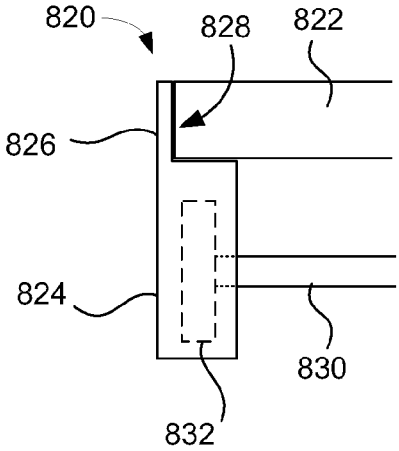

FIG. 8C

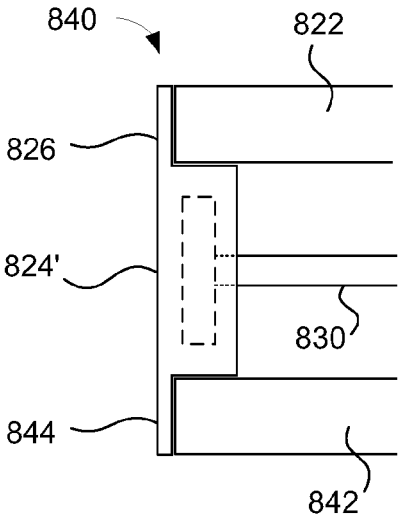

FIG. 8D

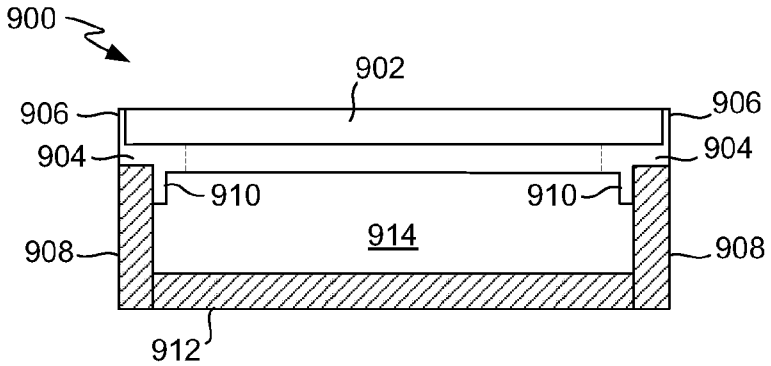

FIG. 9A

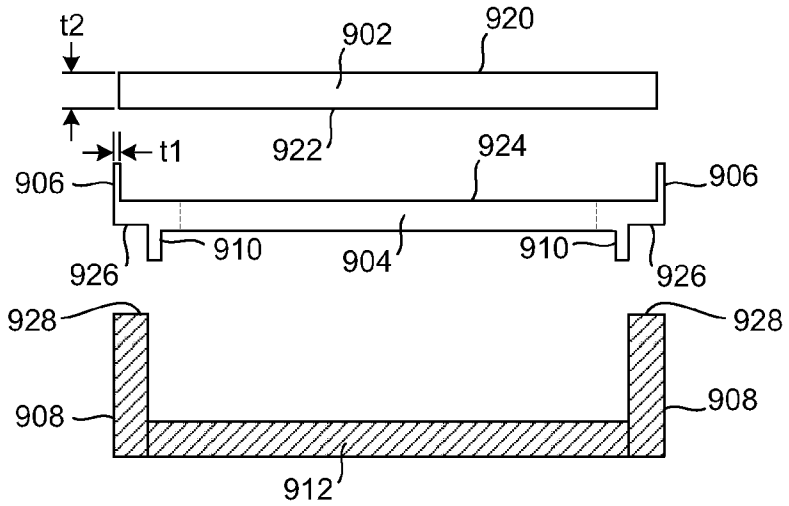

FIG. 9B

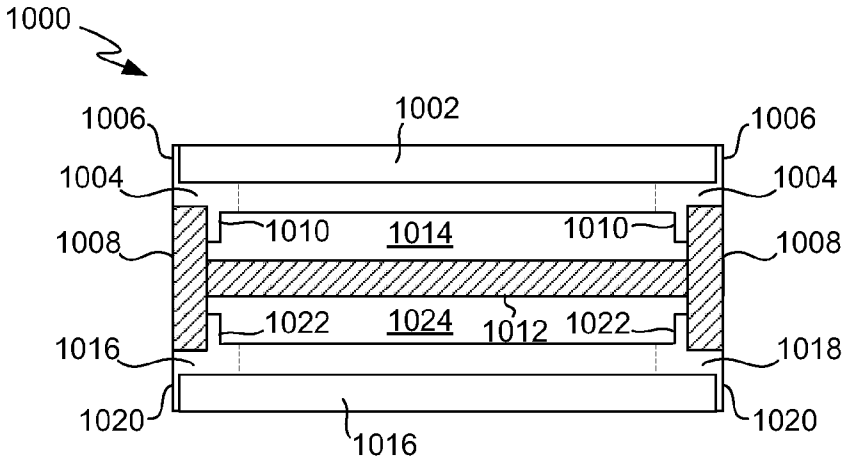

FIG. 10

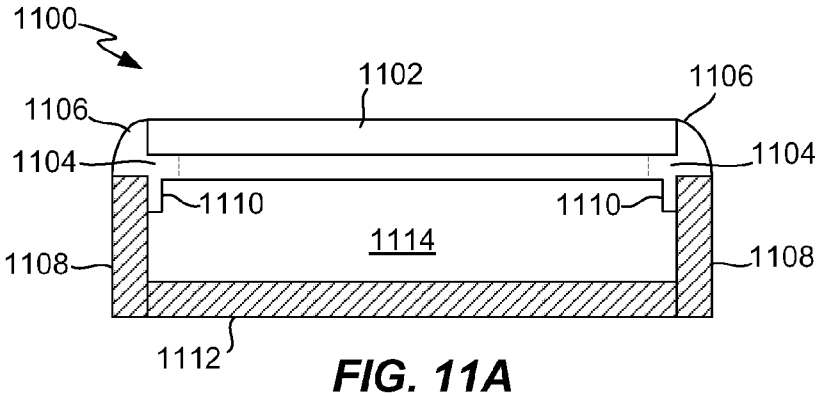

FIG. 11A

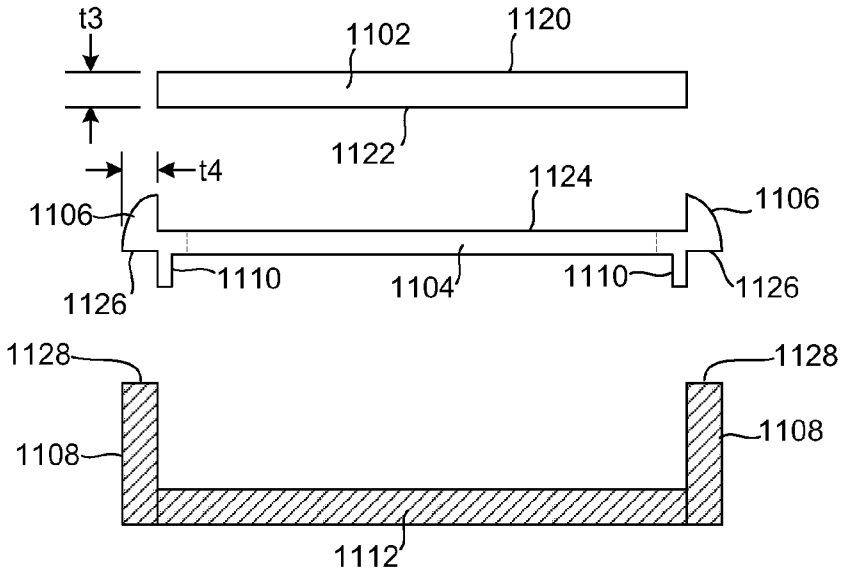

FIG. 11B

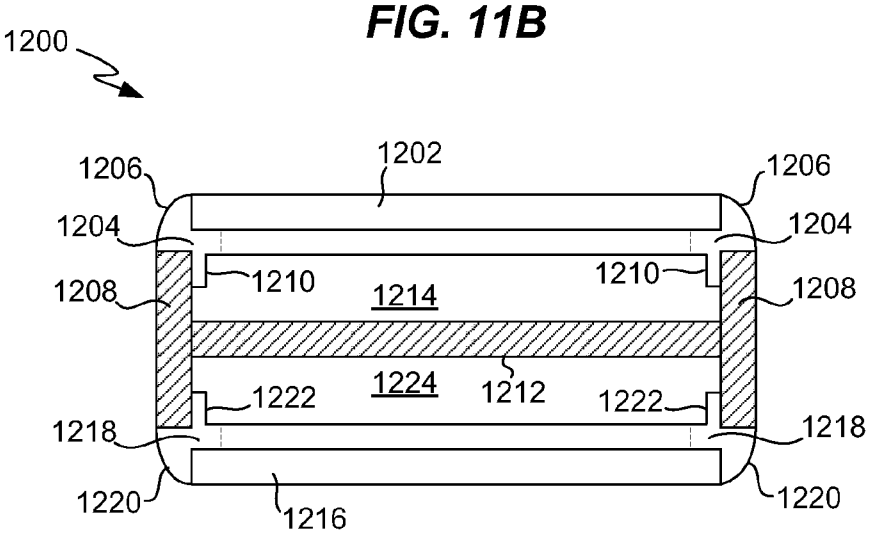

FIG. 12

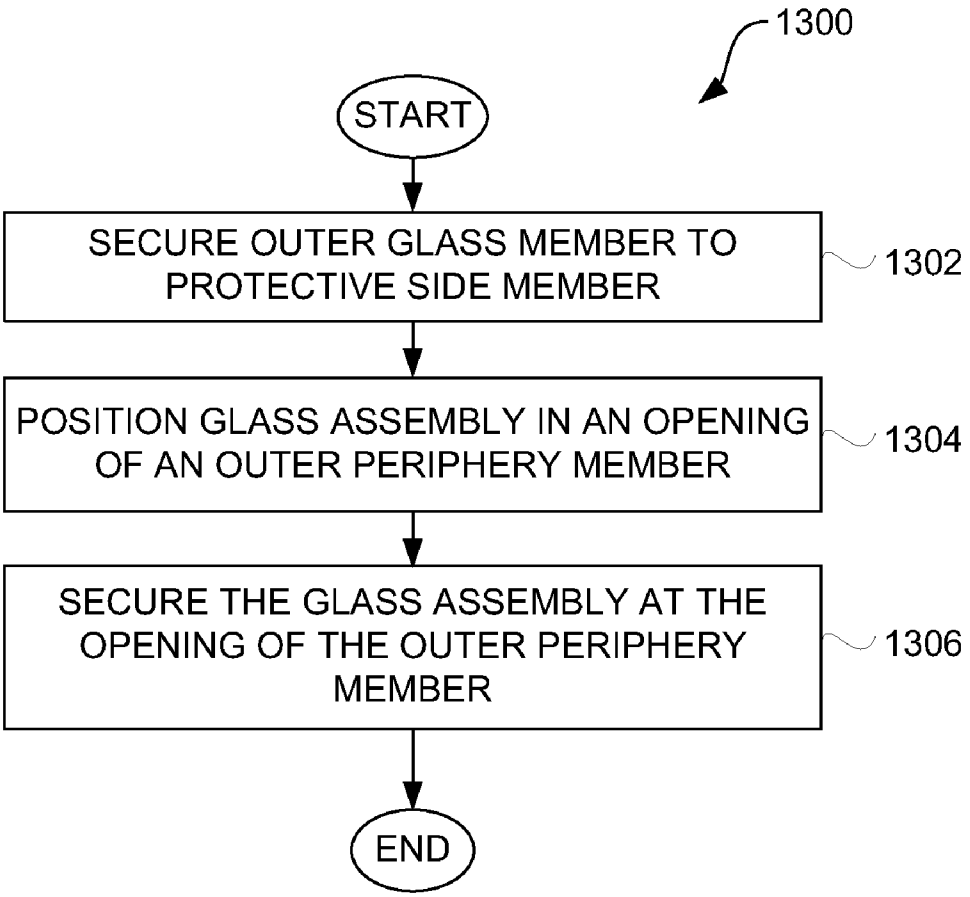
1300
START
SECURE OUTER GLASS MEMBER TO PROTECTIVE SIDE MEMBER
1302
POSITION GLASS ASSEMBLY IN AN OPENING OF AN OUTER PERIPHERY MEMBER
1304
SECURE THE GLASS ASSEMBLY AT THE OPENING OF THE OUTER PERIPHERY MEMBER
1306
END

FIG. 13

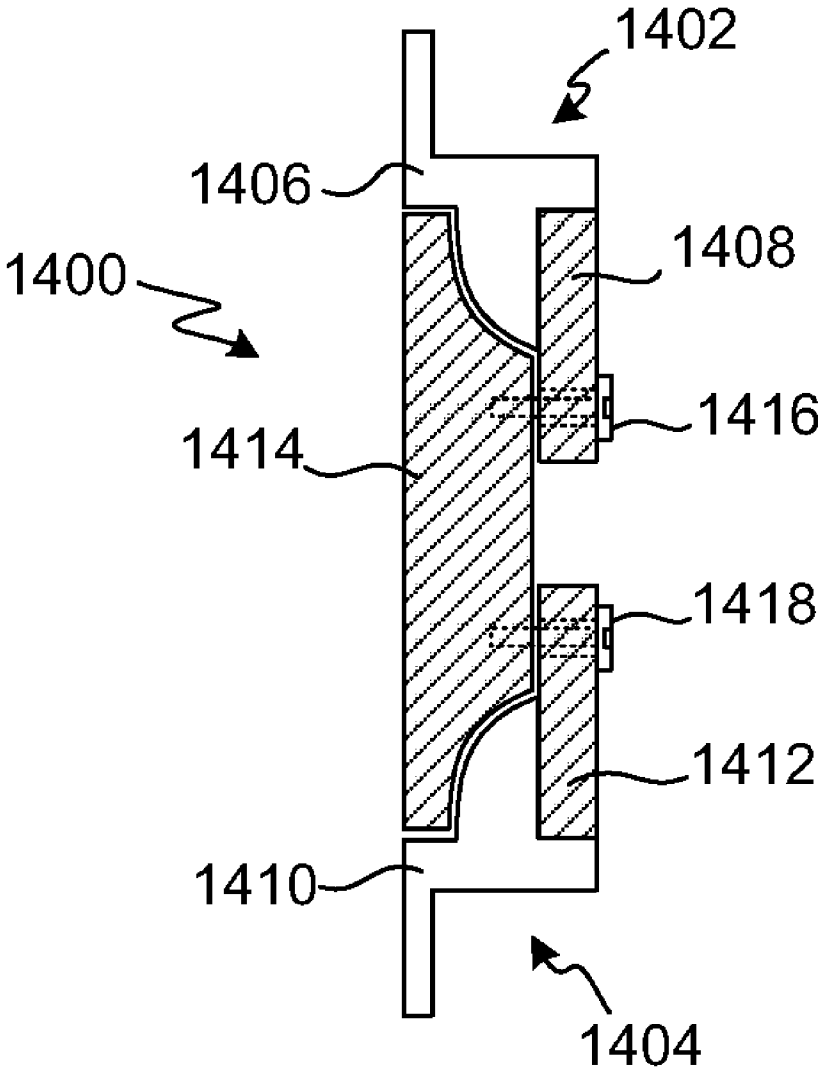

FIG. 14

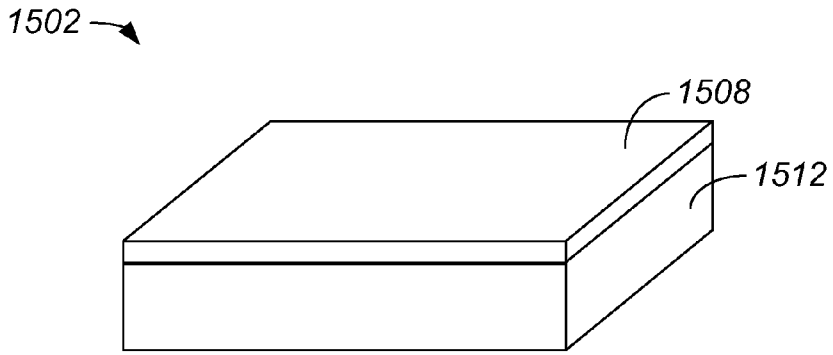

FIG. 15A

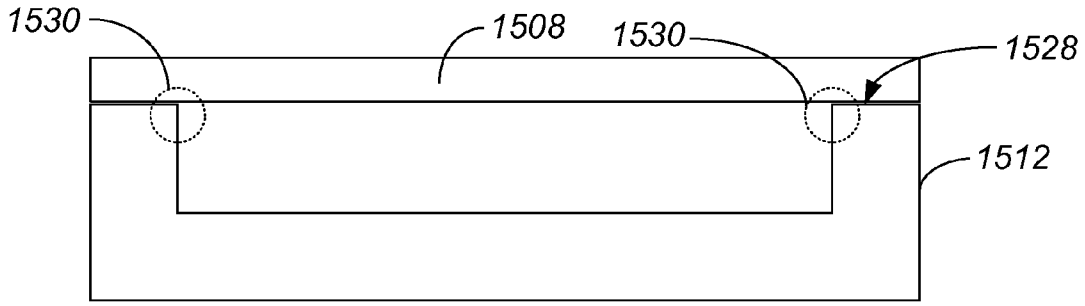

FIG. 15B

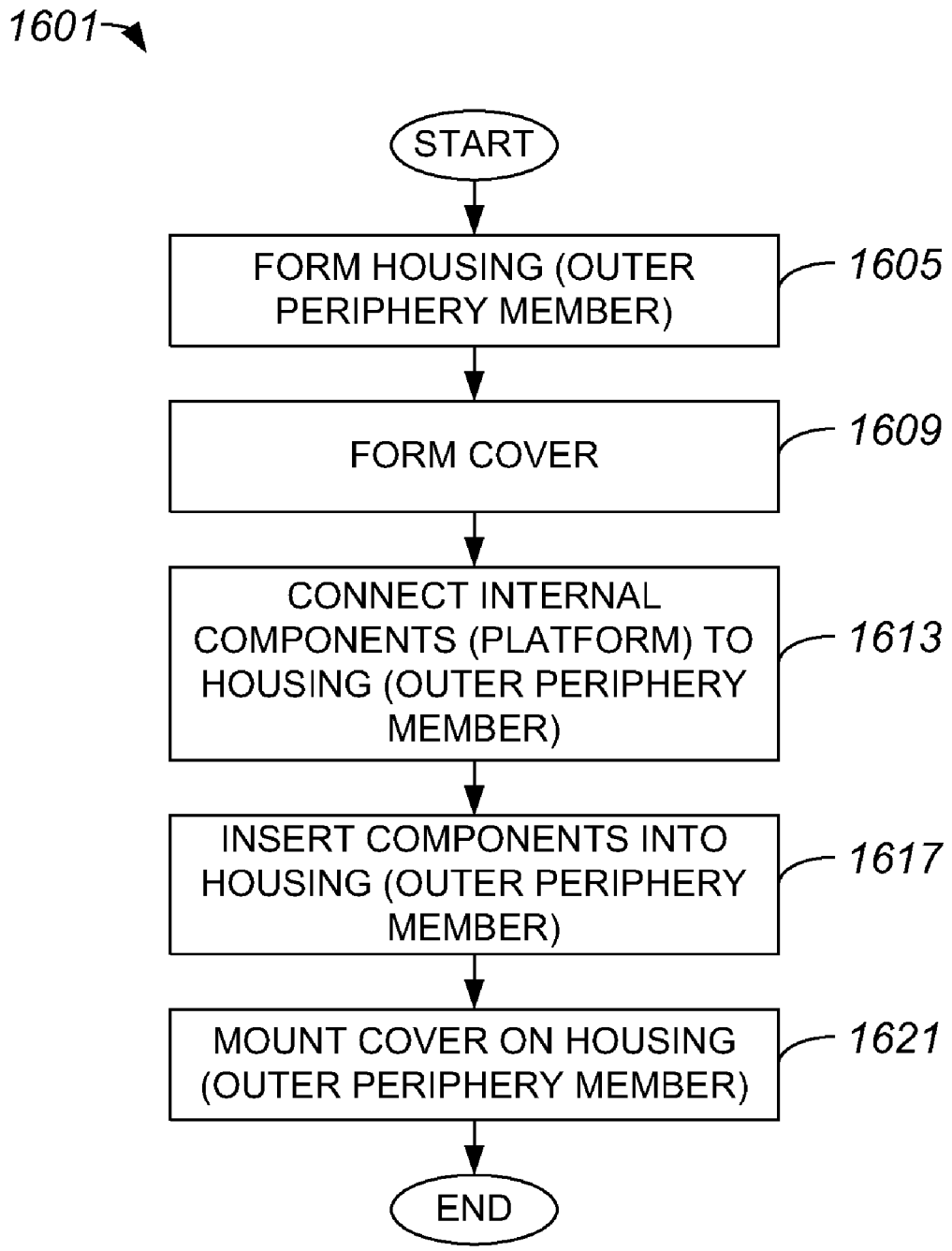
1601
START
FORM HOUSING (OUTER PERIPHERY MEMBER)
1605
FORM COVER
1609
CONNECT INTERNAL COMPONENTS (PLATFORM) TO HOUSING (OUTER PERIPHERY MEMBER)
1613
INSERT COMPONENTS INTO HOUSING (OUTER PERIPHERY MEMBER)
1617
MOUNT COVER ON HOUSING (OUTER PERIPHERY MEMBER)
1621
END

FIG. 16

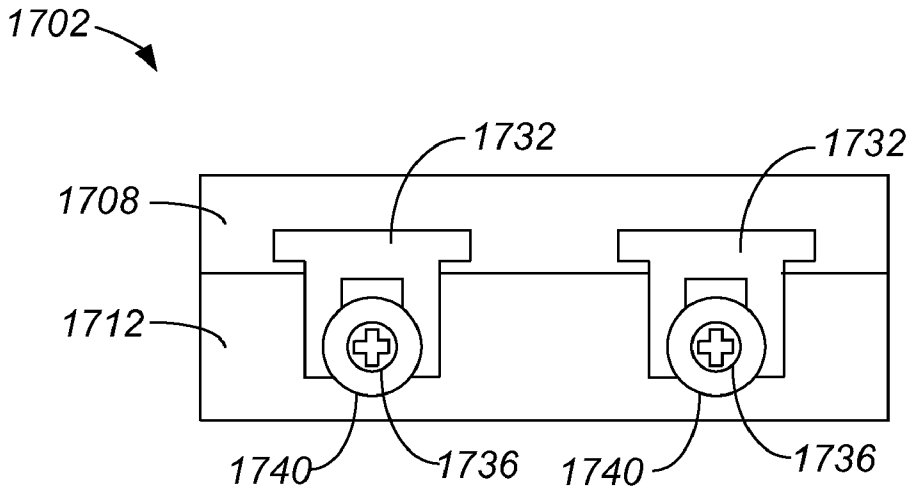
1702
1732
1732
1708
1712
1740
1736
1740
1736

FIG. 17

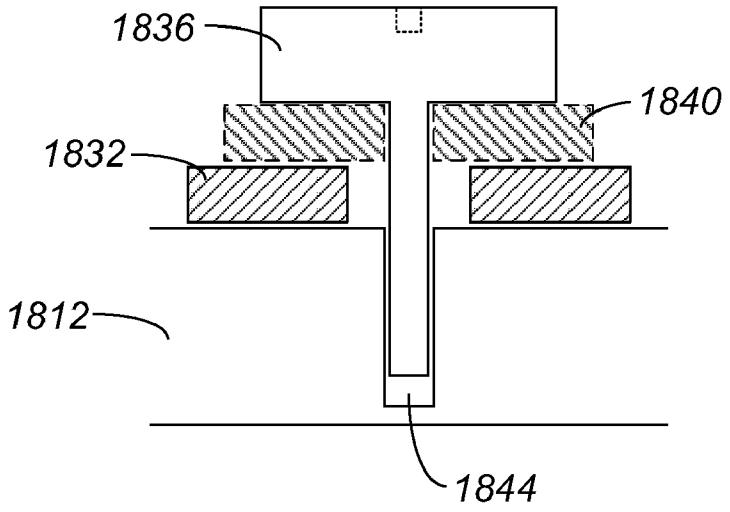
1836
1840
1832
1812
1844

FIG. 18

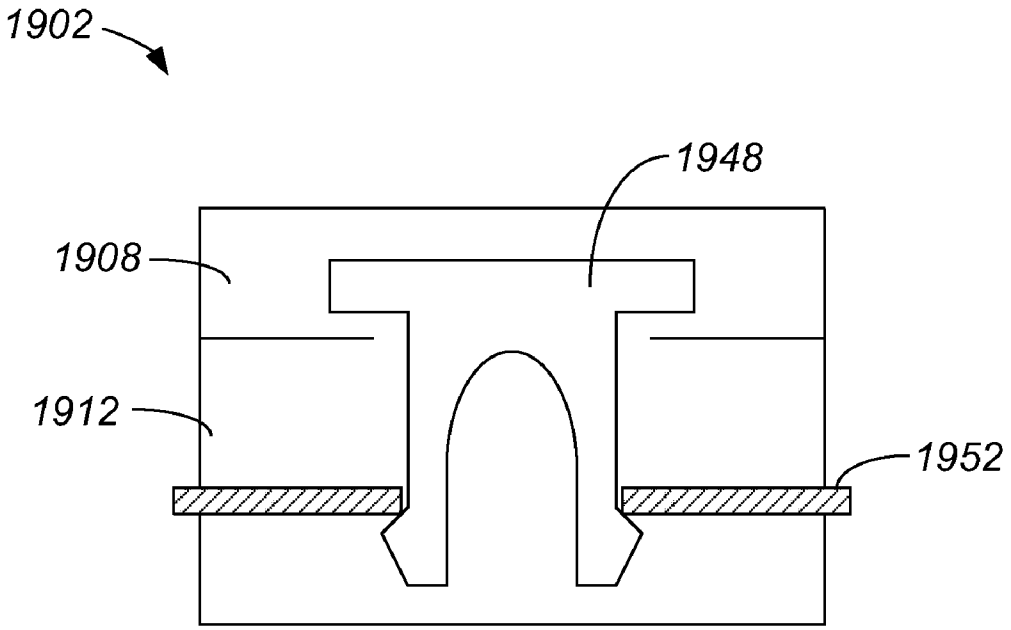

FIG. 19

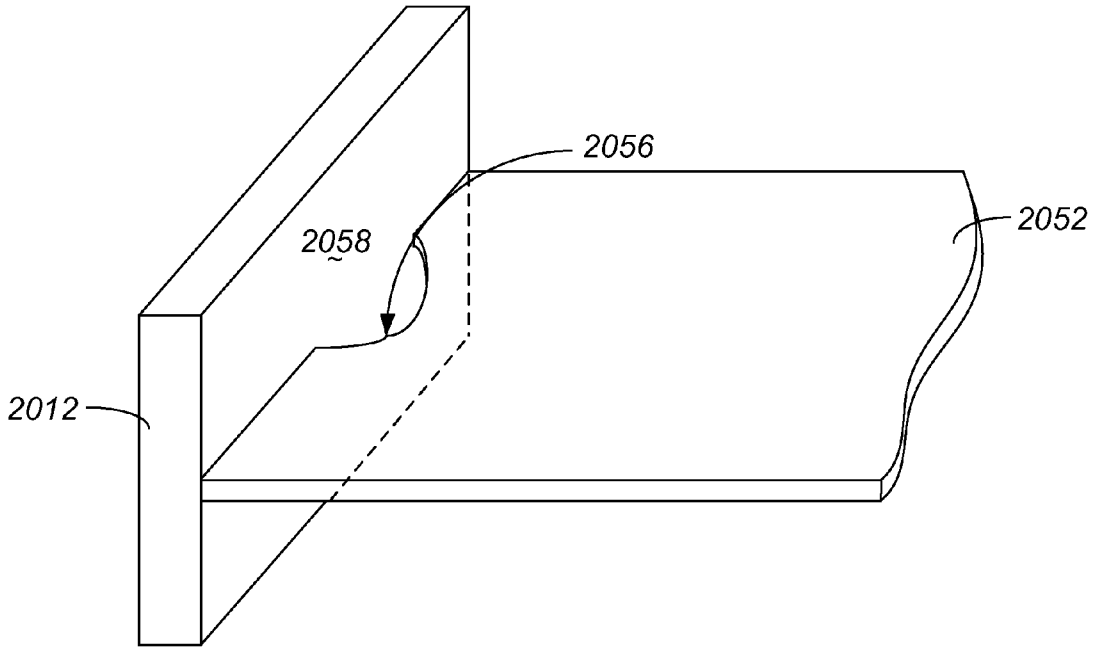

FIG. 20

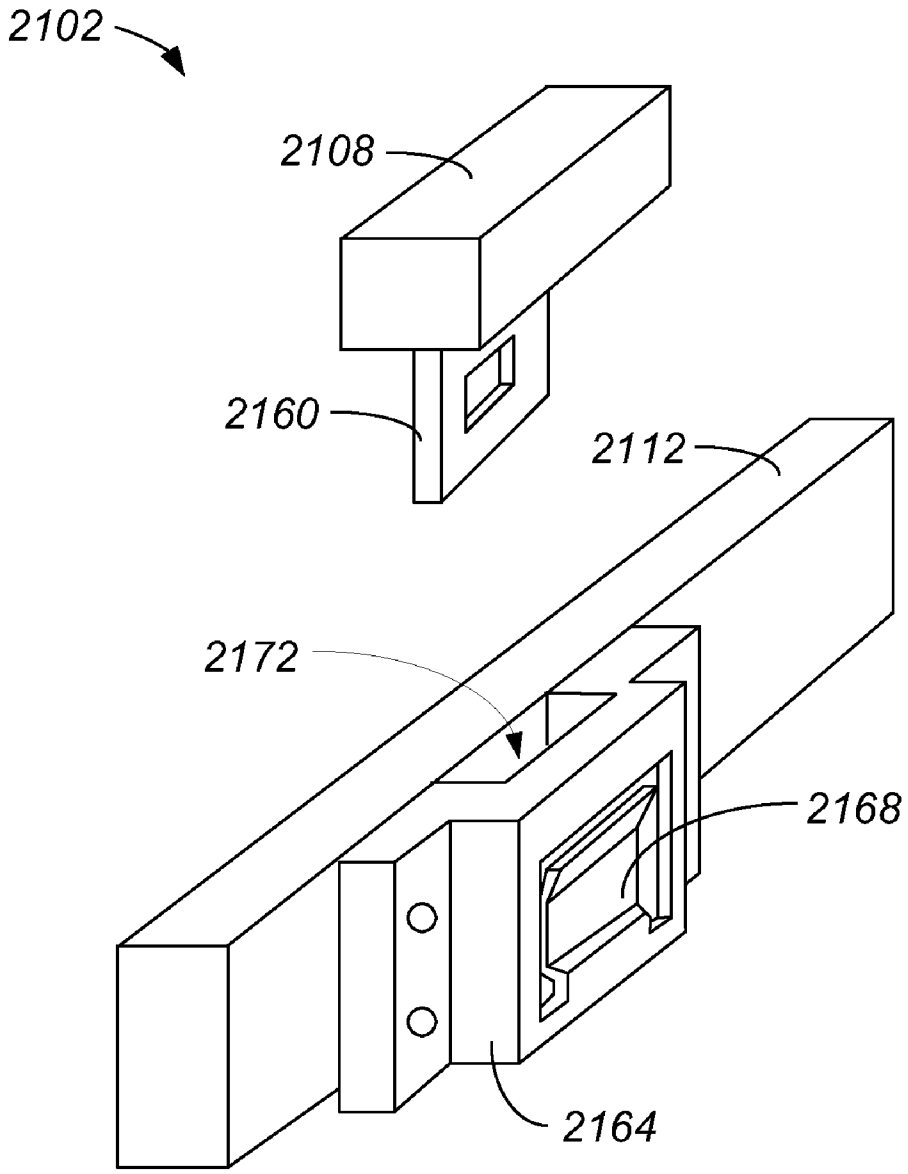

FIG. 21

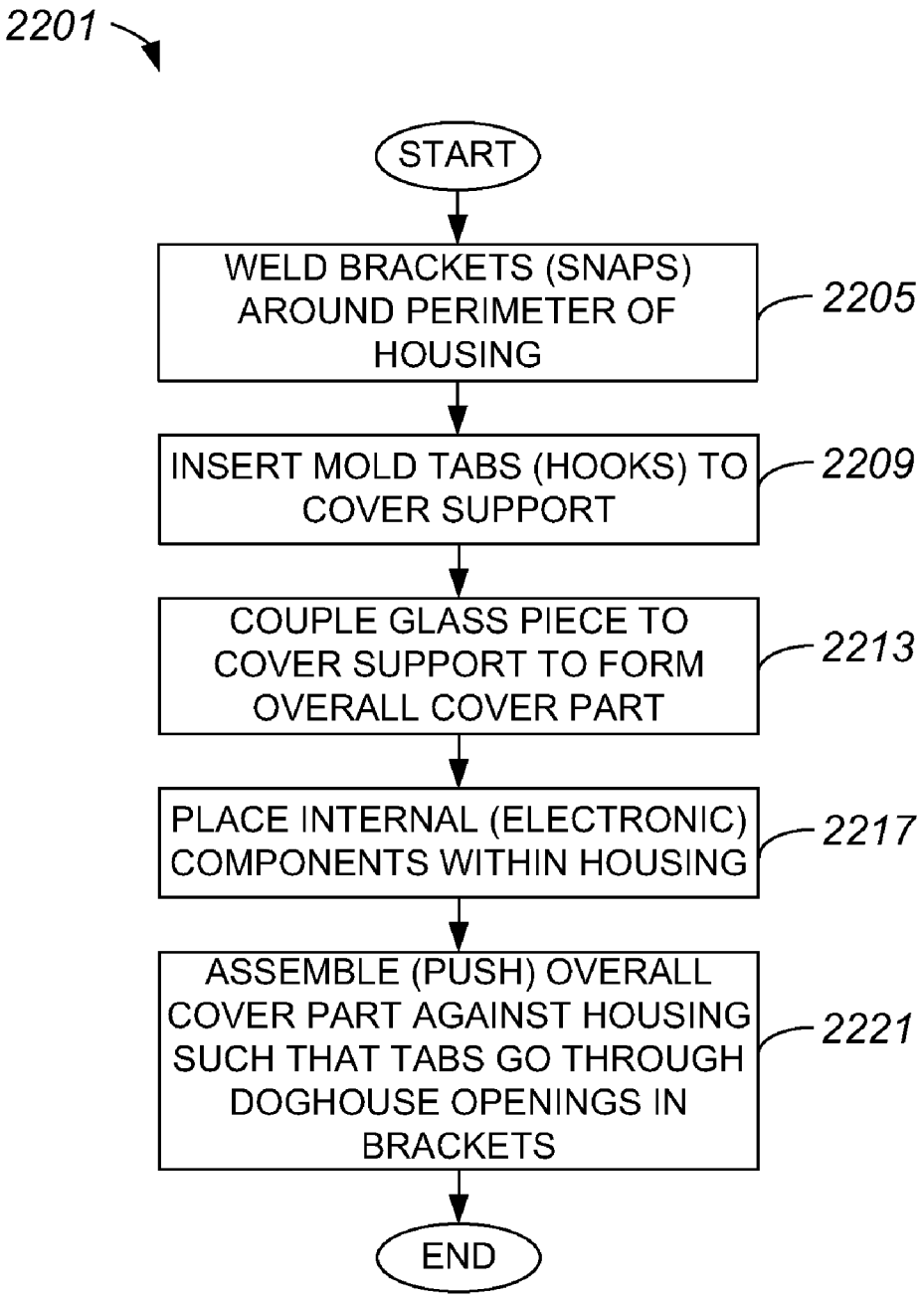
2201
START
WELD BRACKETS (SNAPS) AROUND PERIMETER OF HOUSING
2205
INSERT MOLD TABS (HOOKS) TO COVER SUPPORT
2209
COUPLE GLASS PIECE TO COVER SUPPORT TO FORM OVERALL COVER PART
2213
PLACE INTERNAL (ELECTRONIC) COMPONENTS WITHIN HOUSING
2217
ASSEMBLE (PUSH) OVERALL COVER PART AGAINST HOUSING SUCH THAT TABS GO THROUGH DOGHOUSE OPENINGS IN BRACKETS
2221
END

FIG. 22

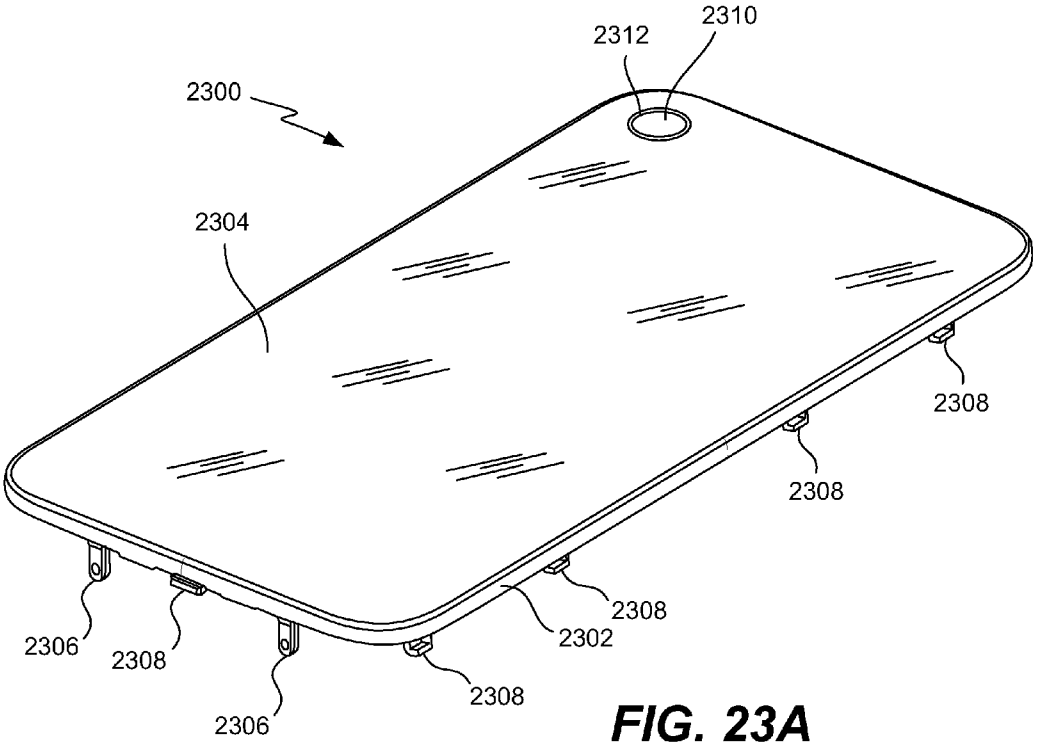

FIG. 23A

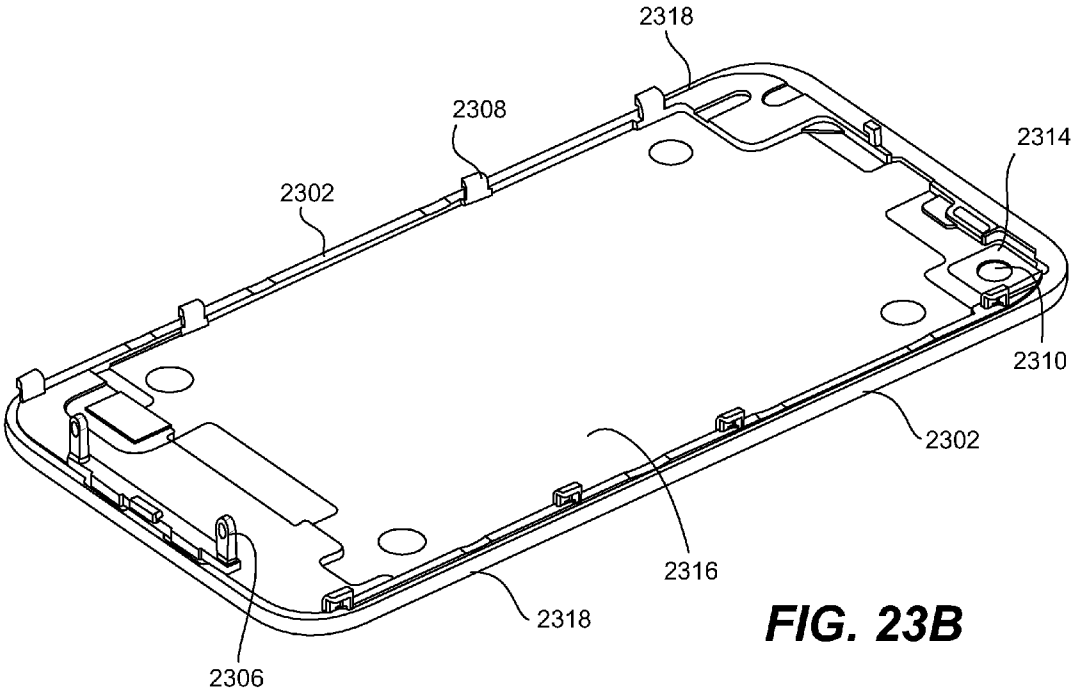

FIG. 23B

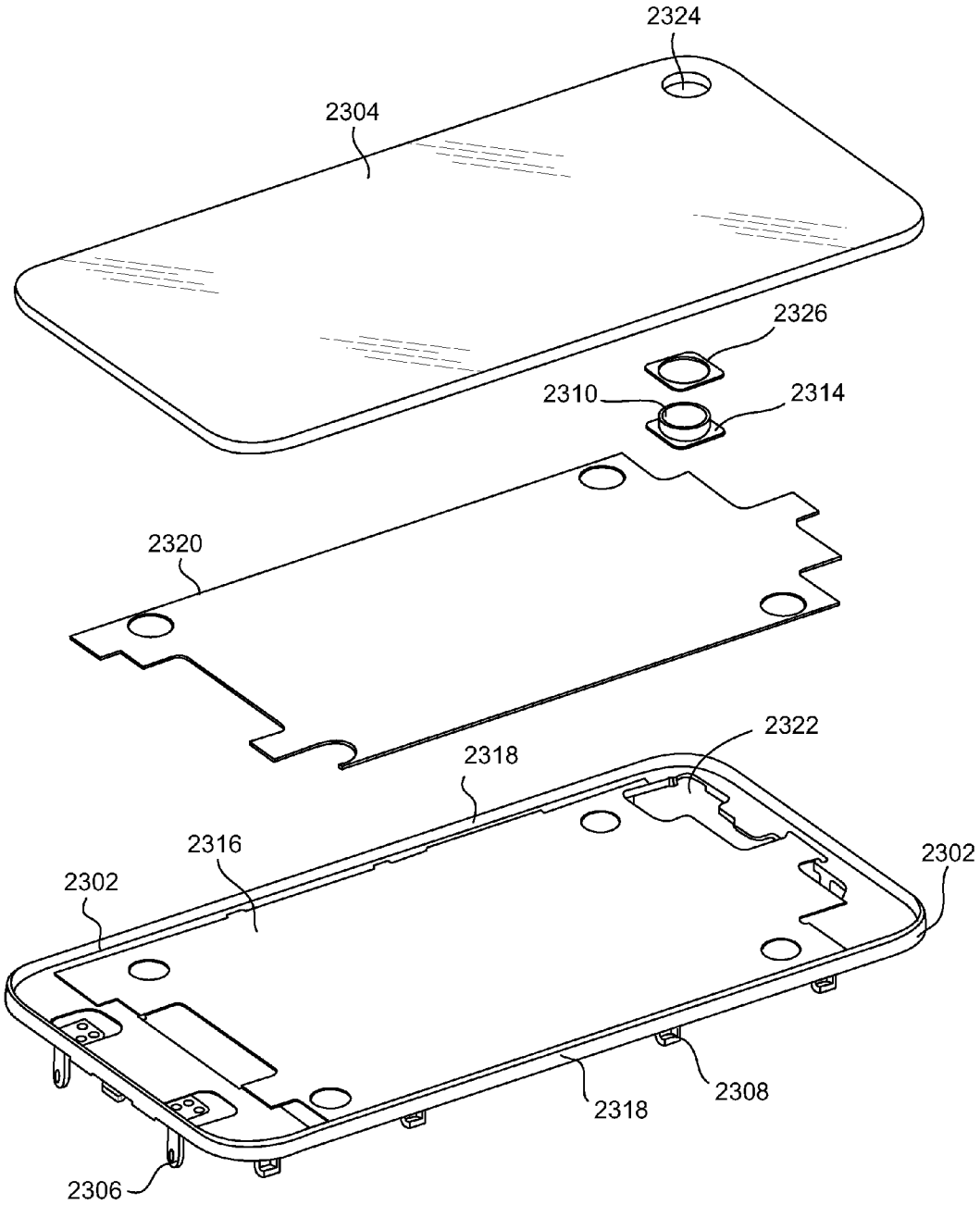
2324
2304
2326
2310
2314
2320
2322
2318
2316
2302
2302
2308
2318
2306

FIG. 23C

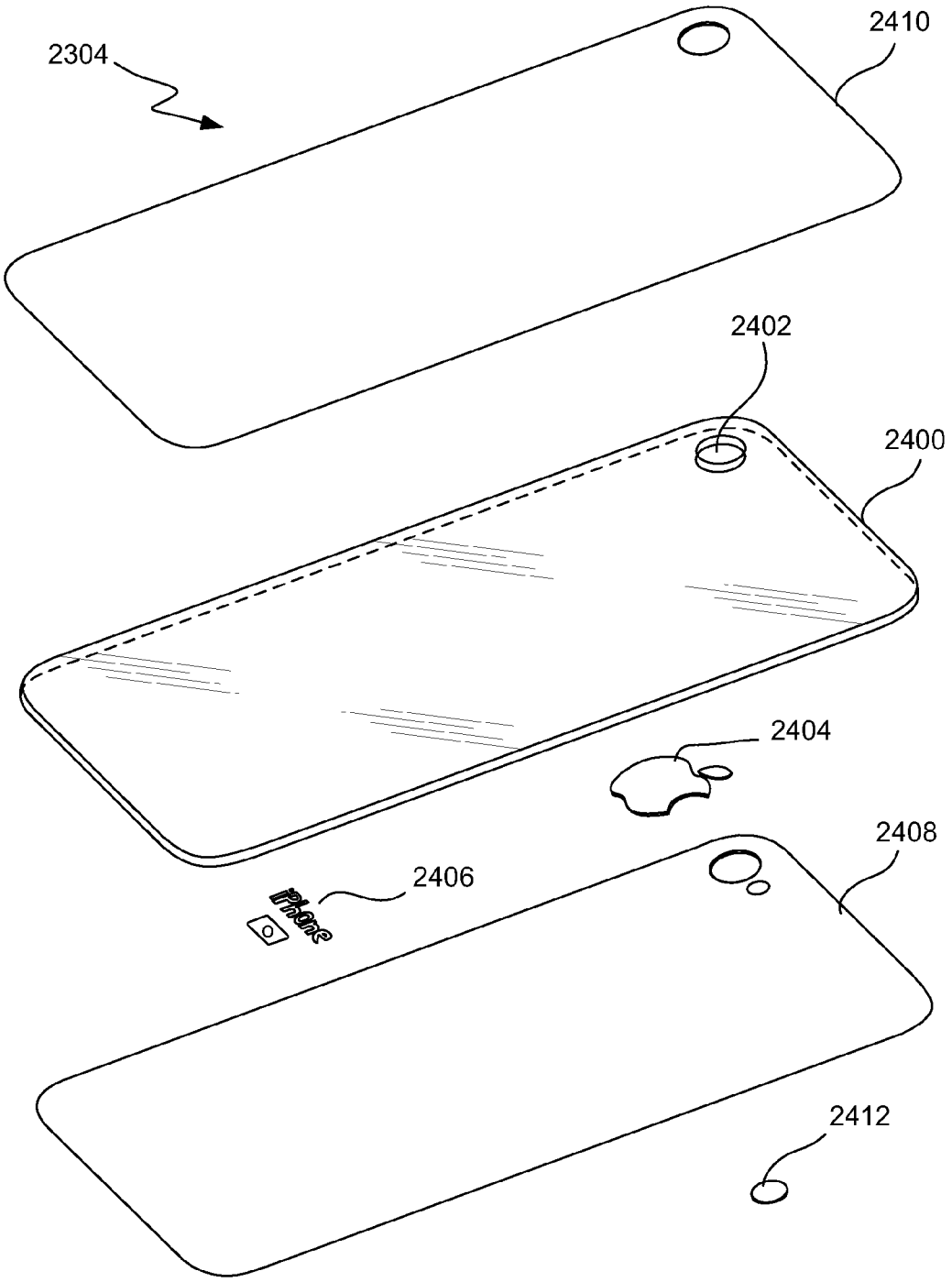

FIG. 24

PROTECTION AND ASSEMBLY OF OUTER GLASS SURFACES OF AN ELECTRONIC DEVICE HOUSING

CROSS-REFERENCE TO RELATED APPLICATIONS

[0001] This application claims priority benefit of U.S. Provisional Application No. 61/325,801, filed Apr. 19, 2010 and entitled "HOUSINGS FOR ELECTRONIC DEVICES AND METHODS THEREFOR," which is hereby incorporated herein by reference.

[0002] This application also claims priority benefit of U.S. Provisional Application No. 61/300,780, filed Feb. 2, 2010 and entitled "HANDHELD ELECTRONIC DEVICES," which is hereby incorporated herein by reference.

BACKGROUND OF THE INVENTION

[0003] Portable electronic devices can be constructed using a variety of different approaches. For example, a "bucket" type approach can be used in which a first housing component serves as a bucket into which electronic device components are placed, and a second housing component serves as a cover for the bucket. This arrangement secures the electronic device components between the first and second housing components. As a variation of this, some or all of the electronic device components can be assembled into the cover for the bucket, and the cover can subsequently be rotated into the bucket to close the device.

[0004] Other known portable electronic devices can be constructed by inserting components into a hollow housing element. For example, an electronic device can be constructed using a tubular structure (e.g., a flattened tube or a hollow rectangular tube) into which electronic device components can be inserted. The electronic device components can be inserted into the tubular structure from one or both ends, and connected within the structure. For example, one or more circuits inserted from opposite ends of the tubular structure can be connected through an opening for a window in the structure. The structure can be capped at one or both ends to ensure that the components remain fixed within the tubular structure, and to provide interface components (e.g., connectors, buttons, or ports) for the device.

[0005] Unfortunately, however, as portable electronic device continue to be made smaller, thinner and/or more powerful, there remains a continuing need to provide improved techniques and structures for providing housings for portable electronic devices.

SUMMARY

[0006] Embodiments are described herein in the context of a housing for an electronic device. The housing can make use of at least one outer member (e.g., cover). The outer member can be aligned, protected and/or secured with respect to other portions of the housing for the electronic device. The electronic device can be portable and in some cases handheld.

[0007] In one embodiment, an electronic device housing can have one or more outer members (e.g., exposed major surfaces), such as front or back surfaces, that are formed of glass. Protective sides can be provided in some embodiments to protect the edges of the one or more glass surfaces so as to dissipate impact forces and thus reduce damage to the electronic device housing. The one or more glass surfaces can be part of outer member assemblies that can be secured to other portions of the electronic device housing.

[0008] The invention pertains to apparatus, systems and methods for assembling electronic devices, namely, portable or handheld electronic devices.

[0009] The invention may be implemented in numerous ways, including, but not limited to, as a method, system, device, or apparatus. Several embodiments of the invention are discussed below.

[0010] As an electronic device enclosure, one embodiment can, for example, include at least a front cover assembly placed and secured to provide a front surface for the electronic device enclosure. The front cover assembly can include a front cover member and a protective side member. The front cover member can have exposed edges, and the protective side member can be provided against and around the exposed edges of the front cover member. In one implementation, the front cover member can be primarily, if not exclusively, made of glass.

[0011] As an electronic device enclosure, another embodiment can, for example, include at least a front cover assembly placed and secured to provide a front surface for the electronic device enclosure. The front cover assembly can include at least a front cover member and a front interface member, with the front cover member being adhered to the front interface member. The embodiment can also include at least a back cover assembly placed and secured to provide a back surface for the electronic device enclosure. The back cover assembly can include at least a back cover member and a back interface member, with the back cover member being adhered to the back interface member.

[0012] As an electronic device enclosure, still another embodiment can, for example, include at least an outer periphery member defining a side surface for the electronic device enclosure, and an internal structure secured to an inner surface of the outer periphery member, where the internal structure is offset from front and back planar boundaries of the outer periphery member. The embodiment can also include a front cover assembly placed and secured adjacent the front planar boundary of the outer peripheral boundary, thereby providing a front surface for the electronic device enclosure. The front cover assembly can include at least a front cover member and a protective side member, with the protective side member being provided against and around the sides of the front cover member.

[0013] As an electronic device, one embodiment can, for example, include at least a housing include at least one a glass surface, with the glass surface having a first glass piece with first optical properties, and a second glass piece with second optical properties. The second optical properties are typically different than the first optical properties.

[0014] Other aspects and advantages of the invention will become apparent from the following detailed description taken in conjunction with the accompanying drawings which illustrate, by way of example, the principles of the invention.

BRIEF DESCRIPTION OF THE DRAWINGS

[0015] The accompanying drawings, which are incorporated into and constitute a part of this specification, illustrate one or more example embodiments and, together with the description of example embodiments, serve to explain the principles and implementations associated with the specification.

[0016] FIG. **1**A-**1**D are views of an electronic device structure in accordance with one embodiment.

[0017] FIG. **2**A-**2**C are views of an electronic device structure in accordance with another embodiment.

[0018] FIG. **3** is a flowchart of an illustrative process for assembling an electronic device in accordance with one embodiment of the invention.

[0019] FIG. **4** is a flow diagram of a housing member alignment process according to one embodiment of the invention.

[0020] FIG. **5** is a structural diagram of an alignment configuration according to one embodiment.

[0021] FIG. **6** is a flow diagram of a housing member alignment process according to one embodiment of the invention.

[0022] FIGS. **7**A-**7**D illustrate assembly of an assembled part according to one embodiment.

[0023] FIG. **8**A is a side view of a partial side portion of an electronic device housing according to one embodiment.

[0024] FIG. **8**B is a side view of a partial side portion of an electronic device housing according to another embodiment.

[0025] FIG. **8**C is a side view of a partial side portion of an electronic device housing according to another embodiment.

[0026] FIG. **8**D is a side view of a partial side portion of an electronic device housing according to still another embodiment.

[0027] FIG. **9**A is a cross-sectional view of an electronic device housing according to one embodiment.

[0028] FIG. **9**B is a cross-sectional assembly diagram for the electronic device housing shown in FIG. **9**A, according to one embodiment.

[0029] FIG. **10** is a cross-sectional view of an electronic device housing according to one embodiment.

[0030] FIG. **11**A is a cross-sectional view of an electronic device housing according to one embodiment.

[0031] FIG. **11**B is a cross-sectional assembly diagram for the electronic device housing shown in FIG. **11**A, according to one embodiment.

[0032] FIG. **12** is a cross-sectional view of an electronic device housing according to one embodiment.

[0033] FIG. **13** is a flow diagram of an outer member assembly process according to one embodiment of the invention.

[0034] FIG. **14** is a side view of a partial side portion of an electronic device housing.

[0035] FIG. **15**A is a diagrammatic perspective representation of a housing to which a cover is assembled in accordance with one embodiment.

[0036] FIG. **15**B is a diagrammatic cross-sectional side-view representation of a cover assembled to housing shown in FIG. **15**A.

[0037] FIG. **16** is a flow diagram for assembling of an electronic device in accordance with one embodiment.

[0038] FIG. **17** is an assembly that includes side screws arranged to couple a cover to a housing will be described in accordance with one embodiment.

[0039] FIG. **18** is a diagrammatic cross-sectional representation of a coupling that utilizes a side screw and a slotted tab in accordance with one embodiment.

[0040] FIG. **19** is a diagrammatic cross-sectional representation of an assembly that includes a lobster snap and a midplate that cooperate to couple a cover frame to a housing in accordance with one embodiment.

[0041] FIG. **20** is a diagrammatic representation of a housing to which a midplate is coupled in accordance with one embodiment.

[0042] FIG. **21** is a diagrammatic representation of a cover piece having an insert molded tab and a housing having a bracket configured to accommodate the tab in accordance with one embodiment.

[0043] FIG. **22** is a process flow diagram which illustrates a method of creating a device that includes a cover piece having an insert molded tab and a housing having a bracket configured to accommodate the tab in accordance with one embodiment.

[0044] FIGS. **23**A-**23**C illustrate perspective diagrams of a back cover assembly **2300** according to one embodiment.

[0045] FIG. **24** illustrates an assembly diagram for the glass member according to one embodiment.

DETAILED DESCRIPTION OF EMBODIMENTS OF THE INVENTION

[0046] Embodiments are described herein in the context of a housing for an electronic device. The housing can make use of an outer member. The outer member can be aligned, protected and/or secured with respect to other portions of the housing for the electronic device. The electronic device can be portable and in some cases handheld.

[0047] According to one aspect, adjoining surfaces of electronic device housings can be mounted or arranged such that adjoining surfaces are flush to a high degree of precision. Edges of portable electronic devices are susceptible to impact force, such as when dropped. According to another aspect, protective sides can be provided on edges of electronic device housings so to dissipate impact forces and thus reduce damage to electronic device housings. According to still another embodiment, an electronic device housing can have one or more of its exposed major surfaces (e.g., front or back surfaces) formed of glass. The one or more glass surfaces can be protected by the protective sides and/or can be aligned so that the top surfaces of the glass surfaces and the protective sides can be substantially flush.

[0048] According to another aspect, apparatus, systems and methods for robustly attaching a cover portion of an electronic device to a bottom portion, e.g., a housing portion, of the electronic device are described. The cover portion may generally include a frame (e.g., interface member) into which n outer member (e.g., glass member) has been inserted. Attachment members (e.g., arms, tabs) can be coupled to, e.g., insert molded into, a cover portion, and can be arranged to substantially engage with a housing portion such that the cover portion is effectively held against the housing portion. The attachment members can be used to fasten the cover portion to the housing. In general, receptacles of the housing portion are arranged to substantially capture, mate or otherwise engage attachment members of the cover portion.

[0049] According to another aspect, a cover assembly can be configured to support and protect an outer glass member. The cover assembly can form part of a housing for an electronic device. The cover assembly can also include a distinct glass lens, attachment members, structural support.

[0050] According to still another aspect, an optical lens can be formed from a formed optical adhesive. The optical lens can, for example, be used as a lens for a camera flash of a portable electronic device. The optical lens can be provided between the camera flash and the cover member A mold can be used to form a lens from the optical adhesive.

[0051] The following detailed description is illustrative only, and is not intended to be in any way limiting. Other embodiments will readily suggest themselves to skilled per-

sons having the benefit of this disclosure. Reference will now be made in detail to implementations as illustrated in the accompanying drawings. The same reference indicators will generally be used throughout the drawings and the following detailed description to refer to the same or like parts. It should be appreciated that the drawings are generally not drawn to scale, and at least some features of the drawings have been exaggerated for ease of illustration.

[0052] In the interest of clarity, not all of the routine features of the implementations described herein are shown and described. It will, of course, be appreciated that in the development of any such actual implementation, numerous implementation-specific decisions must be made in order to achieve the developer's specific goals, such as compliance with application and business related constraints, and that these specific goals will vary from one implementation to another and from one developer to another. Moreover, it will be appreciated that such a development effort might be complex and time-consuming, but would nevertheless be a routine undertaking of engineering for those of ordinary skill in the art having the benefit of this disclosure.

[0053] According to one aspect, a housing for an electronic device can include an outer periphery member that forms the sides of the electronic device. The outer periphery member can define a volume into which electronic device components can be placed. To obtain the components within the device, front and back covers can be placed over the front and back surfaces of the outer periphery member.

[0054] An outer periphery member can provide a variety of attributes to the electronic device including for example, structural, functional, cosmetic, or combinations of these. The outer periphery member may for example form at least a portion of the right, left, top and bottom sides of the device. As such, the outer periphery member may surround components that are placed in the device back to front, front to back or center to back and front (e.g., components inserted within the volume defined by the outer periphery member). The outer periphery member may be formed from one or more elements. The elements may be similar or different depending on the dimensions or shape of the device, as well as functional or structural considerations (e.g., outer periphery member elements serving as an antenna for tuning electromagnetic waves). If several elements are combined to form the outer periphery members, the elements can be connected in any suitable manner to form a single unit having adequate structural, functional, or cosmetic properties. In some cases, the outer periphery member can be formed from several elements that act as a single integral unit (e.g., a unitary part). For example, the elements can be integrally formed together.

[0055] In some embodiments, the outer periphery member can define a band that forms an enclosed volume having a front and back open area. The band may define a ring-like structure that wraps around some or all of the components of the electronic device. The electronic device can include a variety of components such as housing elements, electronics, structural members, or combinations of these. In some cases, one or more structural members (e.g., a mid-plate) can be connected to the outer periphery member within the volume enclosed by the outer periphery member to receive and support components, or enhance the structural properties of the outer periphery member.

[0056] In some embodiments, the electronic device can include front and/or back cover assemblies operative to cap the volume defined by the outer periphery member. The cover assemblies can be positioned relative to the open areas of the outer periphery member such that the front and back cover assemblies are placed adjacent to the front and back surfaces of the outer periphery member, respectively. The cover assemblies can include any suitable feature, including for example housing portions, access points, electronics, structural members, aesthetic members, or combinations of these. In some cases, the cover assemblies can include one or more features for securing or retaining electronic device components within the volume enclosed by the outer periphery member.

[0057] The outer periphery member and the front and back cover assemblies can provide some or all of the exterior surfaces of the device, and thus define the outer periphery form or look and feel of the electronic device. In particular, the front cover can substantially form the front surface of the device, the back cover can substantially form the back surface of the device, and the outer periphery member can substantially form the top, bottom, left and right surfaces of the device. It will be understood, however, that some or all of the cover assemblies can instead or in addition provide part of the top, bottom, left or right surfaces of the device, and that some or all of the outer periphery member can provide part of the front or back surfaces of the device.

[0058] Because the cover assemblies can define exposed surfaces of the electronic device, one or both of the cover assemblies can include components, coatings or finishes that enhance the functional, cosmetic and/or aesthetic characteristics of the assemblies. For example, one or both of the cover assemblies can include a transparent or translucent window through which input/output components are able to be used by the user. For example, one output component that can be used is a display device that can present information to the user via the cover assembly. As another example, one input component that can be used is a touch sensor (e.g., touch sensor) that can receive user input from the user via the cover assembly. As another example, one or both of the cover assemblies can include a cosmetic component for enhancing the aesthetic appeal of the device. In some embodiments, the cosmetic component can cause the cover assembly to be substantially opaque in some areas (e.g., on a back cover assembly), yet transparent or translucent in other areas (e.g., on a front cover assembly through which content generated by the display device is provided). In other words, the cover assembly can include a transparent or translucent window that is provided on a portion of the cover assembly. The cover assemblies can also support other function features, such as a camera opening, a lens, a light, a sensor, etc.

[0059] Internal components of the electronic device can be assembled using any suitable approach. In some embodiments, the internal components can define one or more layers that are placed within the outer periphery member. For example, layers can initially be placed near the center of the volume defined by the outer periphery member, and subsequently be added towards one or both of the front and back surfaces of the device. Each layer added to the device can be coupled or fit to a layer previously inserted and attached to the device.

[0060] To further retain component layers, the electronic device can include an internal platform providing a structural element for the outer periphery member and to which component layers can be coupled. In some embodiments, the internal platform can provide attachment points for the various layers placed within the electronic device. The internal

platform may be placed within the height of the outer periphery member such that it is substantially near the middle of the outer periphery member (e.g., at half the height of the outer periphery member), thus defining a mid-plate. In particular, the mid-plate can form a substantially H-shape cross-section with the outer periphery member, thus providing enhanced structural properties. Electronic device components or layers can be assembled to both the front and back surfaces of the mid-plate (e.g., the mid-plate separates the internal volume of the outer periphery member into two distinct regions or pockets). The mid-plate can be secured to the outer periphery member (e.g., using welding, or formed with or made integral with the outer periphery member. Although called a plate or platform it will be understood that the internal platform can take a variety of non-planar forms, including various formations that include steps, offsets, curved surfaces, or combinations of these.

[0061] FIG. **1**A is a cross-sectional view of an illustrative electronic device structure taken along the device width in accordance with one embodiment. FIG. **1**B is an exploded cross-sectional view of an illustrative electronic device taken along the device length in accordance with one embodiment. FIG. **10** is a top view of an illustrative electronic device in accordance with one embodiment. FIG. **1**D is a bottom view of an illustrative electronic device in accordance with one embodiment. Electronic device **100** can include any suitable type of electronic device having a display, including for example a media player, a mobile telephone, a personal e-mail or messaging device, pocket-sized personal computers, personal digital assistants (PDAs), a laptop computer, a desktop computer, a music recorder, a video recorder, a camera, radios, medical equipment, and devices combining some or all of this functionality.

[0062] Electronic device **100** can have any suitable shape, including for example a shape delimited by front surface **110**, back surface **112**, left surface **114**, right surface **116**, top surface **118** and bottom surface **119** (not shown in the cross-section). Each surface can be substantially planar, curved, or combinations of these. The surfaces can include one or more chamfers, detents, openings, dips, extensions, or other features modifying the smoothness of the surfaces.

[0063] Electronic device **100** can be constructed using any suitable structure, including for example using outer periphery member **120**. Outer periphery member **120** can surround or wrap some or all of the electronic device such that the outer periphery member defines an internal volume **122** into which electronic device components can be placed. For example, outer periphery member **120** can wrap around the device such that the external surfaces of outer periphery member **120** define left surface **114**, right surface **116**, as well as top surface **118** and bottom surface **119** of the device. To provide a desired functionality to a user, the electronic device can include several components placed within the device, for example within volume **122**.

[0064] The outer periphery member can have a particular height (e.g., the device height h) such that the outer periphery member encloses volume **122** into which electronic device components can be assembled. The thickness (e.g., outer periphery member thickness t), length (e.g., device length I), height (e.g., device height h), and cross-section of the outer periphery member can be selected based on any suitable criteria including for example based on structural requirements (e.g., stiffness, or resistance to bending, compression, tension or torsion in particular orientations). In some embodiments, the outer periphery member can serve as a structural member to which other electronic device components can be mounted. The outer periphery member can include one or more depressions, recesses, channels, protrusions, or openings for supporting components or for providing structural support for the device. In some embodiments, an opening can be used to provide access to one or more internal components contained within the outer peripheral member.

[0065] Outer periphery member **120** (or device **100**) can have any suitable cross-section. For example, outer periphery member **120** can have a substantially rectangular cross-section. In some embodiments, outer periphery member **120** can instead or in addition have a cross-section in a different shape, including for example a circular, oval, polygonal, or curved cross-section. In some embodiments, the shape or size of the cross-section can vary along the length or width of the device (e.g., an hourglass shaped cross-section).

[0066] Electronic device components can be placed within volume **122** using any suitable approach. For example, electronic device **100** can include components **130** and **132** can be inserted into volume **122**. Each of components **130** and **132** can include individual components, or several components assembled together as a component layer or stack, or include several distinct layers of components to insert within volume **122**. In some embodiments, components **130** and **132** can each represent several components stacked along the height of the device. The component layers can be electrically coupled to each other to enable data and power transfers, as required for the proper operation of electronic device **100**. For example, the component layers can be electrically coupled using one or more of a PCB, flex, solder, SMT, wires, connectors, or combinations of these. The component layers can be inserted into outer periphery member **120** using any suitable approach. For example, components **130** and **132** can all be inserted from front surface **110** or from back surface **112** (e.g., back to front, front to back, or middle to front and back). Alternatively, the components can be inserted from both front surface **110** and back surface **112**.

[0067] In some embodiments, one or more of the components can serve as a structural element. Alternatively, electronic device **100** can include a distinct structural element placed within volume **122** and coupled to outer periphery member **120**. For example, electronic device **100** can include one or more internal member or platform **140**, which can serve as a mounting points or regions for helping secure, hold or pack one or more component layers (e.g., attaching component **130** to the back surface of internal platform **140**, and component **132** to the front surface of internal platform **140**). Internal platform **140** can be coupled to outer periphery member **120** using any suitable approach, including for example using snaps, fasteners, flexures, welds, glue, or combinations of these. Alternatively, internal platform **140** may even be part of the outer periphery member (e.g., machined, extruded, or cast, or integrally formed as a single unit). The internal platform can have any suitable size, including for example a size that is smaller than the internal volume of outer periphery member **120**.

[0068] Internal platform **140** can be positioned at any suitable height within outer periphery member **120**, including for example substantially at half the height of outer periphery member **120**. The resulting structure (e.g., outer periphery member **120** and internal platform **140**) can form an H-shaped structure that provides sufficient stiffness and resistance to tension, compression, torsion and bending.

[0069] The internal platform, inner surfaces of the outer periphery members, or both can include one or more protrusions, depressions, shelves, recesses, channels, or other features for receiving or retaining electronic device components. In some cases, the internal platform, outer periphery member or both can include one or more openings for coupling components located in the front and back regions. The size of each region can be selected based on any suitable criteria, including for example operational needs of system, numbers and types of electrical components in the device, manufacturing constraints of the internal platform, or combinations of these. The internal platform can be constructed as a distinct component constructed from any suitable material (e.g., plastic, metal or both), or instead defined from an existing electronic device component placed within the volume defined by the outer periphery member. For example, the internal platform can be formed by a printed circuit board or chip used by the device.

[0070] In some embodiments internal platform **140** and/or opening **122** can include one or more electrically conductive elements for providing electrical connections between the components. For example, internal platform **140** and/or opening **122** can include one or more PCB, flex, wire, solder pad, cable, connector, or other electrically conductive mechanism for connecting components within the electronic device.

[0071] Electronic device **100** can include front cover assembly **150** and back cover assembly **160** defining the front and back surfaces, respectively, of electronic device **100**. The front and back cover assemblies can include one or more components, or can include at least a front member and a back member that form some or all of the outer front and back surfaces of the device. Front and back cover assemblies **150** and **160** can be flush, recessed or protruding relative to the front and back surfaces of outer periphery member **120**. In some embodiments, one or both of front and back cover assemblies **150** and **160** can include delicate or fragile components. To protect the components from damage during use or when dropped, one or both of the cover assemblies can be flush or sub-flush relative to the outer periphery member to prevent edges from engaging other surfaces. Alternatively, the one or more of the cover assemblies can be "proud" (i.e., protrude above the edge of the outer peripheral member). In some embodiments, one or both of front cover assembly **150** and back cover assembly **160** can include one or more display regions through which one or more display devices can be viewed. The one or more display regions can be defined by boarders provided by coating or finish can be applied the front member or the back member. Similarly, the coating or finish can also be applied to the front member or the back member can also provide a masking effect to hide internal components.

[0072] In some embodiments, the electronic device can be substantially made of glass. For example, portions of the electronic device housing can have at least 75% of its exterior as glass. In one implementation, one or both of the cover assemblies can be glass while side surface are some material other than glass (e.g., metal, plastic).

[0073] In some embodiments, the housing a portable electronic device can be banged or rub against various surfaces. When plastic or metal housing surfaces are used, the surfaces can tend to become scratched. On the other hand, glass housing surfaces (e.g., glass cover assemblies) can be more scratch resistant. Moreover, glass housing surfaces can offer radio transparency, while metal housing surfaces can disturb or hinder radio communications. In one embodiment, an electronic device housing can use glass housing members (e.g., glass cover assemblies) for a front surface and a back surface of the electronic device housing. For example, a front surface formed from a glass housing member can be transparent to provide visual access to a display device positioned behind the glass housing member at the front surface, while a back surface formed from a glass housing member can be transparent or non-transparent. Non-transparency, if desired, can conceal any interior components within the electronic device housing. In one embodiment, a surface coating or film can be applied to the glass housing member to provide non-transparency or at least partial translucency. Such a surface coating or film can be provided on an inner surface or an outer surface of the glass housing member.

[0074] In some embodiments, one or both of front and back cover assemblies **150** and **160** can provide side protection for the front and back members. When the front member is formed of glass, the side protection can serve to protect the front member from damage if subjected to impact forces. When the back member is formed of glass, the side protection can serve to protect the back member from damage if subjected to impact forces.

[0075] In some embodiments, one or both of front and back cover assemblies **150** and **160** can provide attachment members that can serve to attach front and back cover assemblies **150** and **160**. For example, front cover assembly **150** can include attachment members to attach front cover assembly **150** to internal platform **140** and/or outer periphery member **120**. Back cover assembly **160** can include attachment members to attach back cover assembly **160** to internal platform **140** and/or outer periphery member **120**.

[0076] In some embodiments, one or both the front and back members of front and back cover assemblies **150** and **160** can be formed of glass. The front or back member formed primarily of glass can include one or more pieces of glass. For example, the different pieces of glass can have different configurations, optical properties, and/or cosmetic appearance.

[0077] FIG. **2**A is a schematic perspective view of an illustrative electronic device in accordance with one embodiment. FIG. **2**B is an exploded view of the electronic device of FIG. **2**A in accordance with one embodiment. FIG. **2**C is a cross-sectional view of the electronic device of FIG. **2**A in accordance with one embodiment. The electronic device of FIGS. **2**A-**2**C can include some or all of the features of the electronic device of FIGS. **1**A-**1**D. In particular, components having similar numbers can share some or all features. Outer periphery member **220** can surround the periphery of electronic device **200** to form some or all of the outer-most side, top and bottom surfaces (e.g., surfaces **210**, **212**, **214**, **216**, **218** and **219**) of the electronic device. Outer periphery member **220** can have any suitable shape, including for example one or more elements that can be combined to form a ring. The ring-shape of outer periphery member **220** can enclose volume **222** in which electronic device components can be assembled and retained. The shape of outer periphery member **220** can define the boundaries of volume **222**, and therefore can be determined based on the size and type of components placed within volume **222**. The boundaries of volume **222** (e.g., determined by the shape of outer periphery member **220**) can have any suitable shape, including for example a substantially rectangular shape (e.g., having straight or

rounded edges or corners), a circular shape, an oval shape, a polygonal shape, or any other closed shape that can define a volume.

[0078] Outer periphery member **220** can have any suitable size, which can be determined based on any suitable criteria (e.g., aesthetics or industrial design, structural considerations, components requires for a desired functionality, or product design). The outer periphery member can have any suitable cross-section, including for example a variable cross-section or a constant cross-section. In some embodiments, the cross-section of the ring can be selected based on desired structural properties for the outer periphery member. For example, the cross-section of outer periphery member **220** can be substantially rectangular, such that the height of the outer periphery member is substantially larger than the width of the outer periphery member. This can provide structural stiffness in compression and tension, as well as bending.

[0079] In some embodiments, the dimensions of the outer periphery member cross-section can be determined relative to the dimensions of the internal platform cross section. For example, the outer periphery member height can be in a range of 5 to 15 times the height of the internal platform, for example 8 to 12 times, 9 to 11 times, or approximately 10 times the height of the internal platform. In one implementation, the height of the outer periphery member can be approximately 9 mm, and the height of the internal platform can be approximately 0.9 mm.

[0080] As another example, the width of the outer periphery member can be in a range of 8 to 25 times the width of the internal platform, for example 12 to 20 times, 15 to 18 times, or approximately 16 times the internal platform width. For example, the width of the outer periphery member can be 3 mm and the width of the internal member can be 50 mm. In some embodiments, the height of the internal platform can be related to the width of the outer periphery member. For example, the width of the outer periphery member can be 1 to 8 times the height of the internal platform, such as 2 to 6 times or approximately 4 times the height of the internal platform. In one implementation, the height of the internal platform can be approximately 0.7 mm and the width of the outer periphery member can be approximately 2.5 mm. In some embodiments, the height of the outer periphery member can be related to the width of the internal platform. For example, the width of the internal platform can be 3 to 10 times the height of the outer periphery member, such as 4 to 8 times, 5 to 7 times, or approximately 6 times the height of the outer periphery member. For example, the width of the internal platform can be approximately 5.5 mm and the height of the outer periphery member can be approximately 0.9 mm.

[0081] In some embodiments, outer periphery member **220** can include one or more openings, knobs, extensions, flanges, chamfers, or other features for receiving components or elements of the device. The features of the outer periphery member can extend from any surface of the outer periphery member, including for example from internal surfaces (e.g., to retain internal components or component layers), or from external surfaces. In particular, outer periphery member **220** can include a slot or opening **224** for receiving a card or tray within the device. Opening **224** can be aligned with one or more internal components operative to receive and connect to an inserted component (e.g., an inserted SIM card). As another example, outer periphery member **220** can include connector opening **225** (e.g., for a 30-pin connector) through which a connector can engage one or more conductive pins of electronic device **200**. Outer periphery member **220** can include openings **226** and **227** for providing audio to a user (e.g., an opening adjacent to a speaker), or receiving audio from a user (e.g., an opening adjacent to a microphone). Outer periphery member **220** can instead or in addition include an opening for an audio connector or power supply (e.g., opening **228**), or features **229** for retaining and enabling a button such as a volume control or silencing switch.

[0082] The various features of outer periphery member **220** can be constructed using any suitable approach and at any suitable time. In some embodiments, the features can be constructed as part of a process that creates outer periphery member **220** from a single piece of material that is manufactures into the final shape of outer periphery member **220** (e.g., using a machining process). In some embodiments, several pieces of material can instead or in addition be shaped individually and combined into outer periphery member **220**. The various features can then be created as part of each individual piece, or once the entire outer periphery member has been assembled. Outer periphery member **220** can be constructed from any suitable material, including for example a metal (e.g., steel or aluminum), plastic (e.g. polyurethane, polyethylene or polycarbonate), composite material, or any combination thereof. In some embodiments, outer periphery member **220** can be constructed from the combination of several materials.

[0083] In some embodiments, outer periphery member **220** can have a functional use or purpose in addition to serving as a cosmetic component or as a structural component. For example, outer periphery member **220** can be used as part of an antenna for capturing electromagnetic waves radiated as part of a communications network. In some cases, outer periphery member **200** can be used as parts of more than one antenna.

[0084] In some embodiments, one or more portions of outer periphery member **220** can be treated to provide an aesthetically pleasing component. In particular, left surface **214**, right surface **216**, top surface **218**, and bottom surface **219** can be treated using a cosmetic surface treatment such as, for example, polishing, coating (e.g., using a dye or coloring material, or a material providing an optical effect), glazing, thin film deposition, grinding, superfinishing, or any other suitable process. In some embodiments, front or back surfaces of outer periphery member **220** can instead or in addition be provided with a cosmetic treatment (e.g., for regions of the outer periphery member that may not be covered by back and front cover assemblies **250** and **260**).

[0085] To reduce the overall weight, size or both of electronic device **200**, the thickness of outer periphery member **220** can be selected such that outer periphery member **220** is only minimally resistant to one or more of bending, torsion, tension, compression, or other deformation of the band. For example, outer periphery member **220** can be more resistant to tension and compression, but less resistant to bending or torsion. To provide sufficient resistance to all types of deformation, electronic device **200** can include a structural component placed within volume **222**. In some embodiments, one or more of the internal components of the electronic device can be connected to the outer periphery member and serve as a structural component. For example, a circuit board (with or without a separate stiffening element) can be connected to opposite portions of outer periphery member **220**. Alternatively, a distinct and dedicated structural component can be coupled to outer periphery member **220**. In the example of

FIGS. **2A-2C**, electronic device **200** can include internal platform **240** forming a distinct structural component of the electronic device. Internal platform **240** can include any suitable shape, including for example a substantially planar shape. In some embodiments, internal platform **240** can include several distinct regions, such as a primary region and step regions extending from the primary region to engage one or more features of outer periphery member **220**.

[0086] Internal platform **240** can cover any suitable area within volume **222**. Internal platform **240** can include any suitable features for securing or connecting electronic device components, such as one or more snaps, prongs, chamfers, extends, openings, access points, doors, or combinations of these. In some cases, internal platform **240** can include one or more dedicated features for receiving or securing specific electrical components, such as speakers, microphones, audio jacks, cameras, light sources, chips, or combinations of these.

[0087] Internal platform **240** can be constructed using any suitable approach. In some embodiments, internal platform **240** can be constructed from a single material or as a combination of several materials. For example, internal platform **240** can include one or more metal elements (e.g., included in extensions used to connect internal platform **240** to outer periphery member **220**) around which a plastic can be molded to form internal platform **240**. Some portions of the metal elements of internal platform **240** can extend beyond the edges of the plastic periphery so that the internal platform can be coupled to the outer periphery member via the metal elements. For example, the exposed metal elements can be connected to the outer periphery member using welding, soldering, heat staking, an adhesive, tape, a fastener, or any other connection mechanism. The outer periphery member can include one or more counterpart features on internal surfaces of the outer periphery member for retaining or receiving internal platform **240**. The connection between the metallic portions of internal platform **240** and outer periphery member **220** can serve to ground particular electronic device components (e.g., components **230** and **232**).

[0088] Internal platform **240** can be coupled to any suitable portion of outer periphery member **220**. For example, internal platform **240** can be assembled within the height of outer periphery member **220** (e.g., based on the position of contact points or regions of the outer periphery member). The distribution of the contact points can be selected based on structural considerations, including for example based on a desired resistance to torsion or bending. In particular, the electronic device can include at least four contact points or regions distributed within outer periphery member **220** (e.g., near the corners of the outer periphery member). As another example, internal platform **240** can include contact regions along the straight portions of outer periphery member **240**. As still another example, stepped regions of internal platform **240** can be coupled to the front or back surfaces of outer periphery member **220** (e.g., on opposite portions of the front or back surfaces).

[0089] In some embodiments, internal platform **240** can be placed within the height of outer periphery member **240** such that components **230** and **232** can be placed on both the front and back surfaces of internal platform **240**. For example, components **230** can be inserted from back surface **212**, and components **232** can be inserted from front surface **210**. Components **230** and **232** can be coupled to internal platform **240** for security, and can instead or in addition be electrically connected to each other through an opening in internal platform **240**. In some embodiments, some components **230** and **232** can first be coupled to back and front cover assemblies **250** and **260**, respectively, before being inserted in volume **222** and coupled to outer periphery member **220**. In effect, by its position internal platform **240** can define back and front pockets or regions within volume **222** in which electronic device components can be placed. The size of each pocket or region can be determined based on any suitable criteria, including for example the number and size of components to place in each region, the required position of internal platform **240** relative to outer periphery member **220** (e.g., if available positions are limited due to structural requirements), or combinations of these.

[0090] To retain components within volume **232**, electronic device **200** can include front cover assembly **250** and back cover assembly **260** providing the back and front surfaces of the electronic device, respectively. Each cover assembly can be coupled to outer periphery member **220** using any suitable approach, including for example using an adhesive, tape, mechanical fastener, hooks, tabs, or combinations thereof.

[0091] In some embodiments, one or both of cover assemblies **250** and **260** can be removable, for example for servicing or replacing electronic device components (e.g., a battery). In some embodiments, cover assemblies **250** and **260** can include several distinct parts, including for example a fixed part and a removable part. The inner surfaces of front cover assembly **250** and back cover assembly **260** can include any suitable feature, including for example one or more ridges, hooks, tabs, extensions, or any combination thereof for retaining the covers or ensuring proper alignment of the covers. The features of cover assemblies **250** and **260** can interact with corresponding features of outer periphery member **220**) or other components of the electronic device to ensure proper placement of the covers. Front cover assembly **250** and back cover assembly **260** can be positioned in any suitable manner relative to outer periphery member **220**.

[0092] Back cover assembly and front cover assembly can be coupled to any suitable portion of outer periphery member. In some embodiments, back cover assembly and front cover assembly can be connected relative to outer periphery member in the same or different manners. In the example of electronic device, both back cover assembly and front cover assembly can be positioned over the back and front surfaces, respectively, of outer periphery member. In some embodiments, one or both of back cover assembly and front cover assembly can only partially cover back surface and front surface, respectively. For example, one or both of back cover assembly and front cover assembly can be placed within the periphery of outer periphery member (e.g., recessed within the outer periphery member).

[0093] Returning to electronic device **200** (FIGS. **2A-2C**), back cover assembly **260** and front cover assembly **250** can be constructed from any suitable material or combination of materials. In some embodiments, each of cover assemblies **250** and **260** can be constructed by combining several distinct components. For example, one or both cover assemblies can include a transparent or translucent plate (e.g., a rectangular plate of glass). As another example, one or both cover assemblies can include a base or support structure constructed from one or more of a metal or plastic (e.g., aluminum) onto which a transparent component can be assembled. The transparent component can be assembled using any suitable approach, including for example such that one or more electronic device components can be visible through the transparent compo-

nent (e.g., display circuitry), or can receive signals or detect a user's environment through the transparent component (e.g., sensors). Alternatively, one or more portions of the transparent plate can be rendered opaque (e.g., using an ink, or by placing a support structure behind the transparent plate) such that the transparent plate can primarily serve as a cosmetic component. The different components of each cover assembly can be assembled using any suitable approach, including for example using one or more of an adhesive, fastener, tape, interlocking components, overmolding or manufacturing process, or any combination of these.

[0094] In the example of FIGS. **2**A-**2**C, front cover assembly **250** can include support structure **252** on which glass plate **254** is assembled. Support structure **252** can include one or more openings, including an opening through which display **255** can be provided. In some embodiments, support structure **252** and glass plate **254** can include openings for device components, such as button opening **256** and receiver opening **257**. The size and shape of the openings can be selected using any suitable approach, including for example based on the size and shape of the device components placed in or underneath the openings (e.g., opening **256** can determined by the size of the button, while opening **257** can be determine from the size of the receiver, and acoustic considerations for providing sufficient audio to a user).

[0095] In some embodiments, glass plate **254** can include a cosmetic finish hiding from view internal components of the electronic device. For example, an opaque layer can be applied region **259** surrounding display **255** to hide from view the non-display portions of the display circuitry. Because one or more sensors may receive signals through glass plate **254**, the opaque layer can be selectively removed, or selected to allow signals to pass through the glass plate to the sensor behind the plate. For example, glass plate **254** can include regions **259***a* and **259***b* through which sensors (e.g., a camera, infrared sensor, proximity sensor, or ambient light sensor) can receive signals.

[0096] In some embodiments, front cover assembly **250** can support or enable one or more interfaces by which a user can use the electronic device. For example, glass plate **254** can support a touch interface (e.g., a touch pad or a touch screen) for controlling electronic device processes and operations. As another example, front cover assembly **250** can include one or more buttons or sensors (described above) for interacting with the device. In some cases, buttons, switches or other interface elements can be instead or in addition incorporated in outer periphery member **220** or back cover assembly **260**. Electronic device **200** can include any other suitable interface for interacting with a user, including for example display circuitry, a projector, audio output circuitry (e.g., speakers or a an audio port), a haptic interface (e.g., a motor for creating vibrations, or a power source for providing an electrical stimulus), or combinations of these.

[0097] To enhance the cosmetic or aesthetic appeal of electronic device **200**, one or all of outer periphery member **220**, front cover assembly **250** and back cover assembly **260** can be finished using an appropriate process. For example, one or more of polishing, coating (e.g., using a dye or coloring material, or a material providing an optical effect), glazing, thin film deposition, grinding, superfinishing, or any other suitable process can be applied to electronic device components. In some embodiments, one or more glass surfaces (e.g., of front cover assembly **250** or of back cover assembly **260**) can be finished to provide an aesthetically pleasing appearance, for example using one or more masks, coatings (e.g., photochromatic or dichroic), ink layers, or combinations of these. The particular finishes applied to the glass surfaces of front cover assembly **250** and back cover assembly **260** can be selected so that front and back surfaces **214** and **216** have similar or different appearances. In some embodiments, a glass surface can be treated to resist wear or impacts (e.g., scratch resistance), oils from touching, or any other external force applied to the device.

[0098] FIG. **3** is a flowchart of an illustrative process for assembling an electronic device in accordance with one embodiment of the invention. Process **300** can begin at step **302**, an outer periphery member having a closed loop can be obtained. For example, one or more components can be combined to form a loop. At step **304**, an internal platform can be connected to the outer periphery member. For example, an internal member can be inserted within the loop of the band and connected to several portions of the outer periphery member to define a structural component. At step **306**, components for the electronic device can be provided within a volume at least partially defined by the outer periphery member. The components can be provided within the volume from one or both sides of the outer periphery member. For example, components can be coupled to both sides of the internal platform. At step **308**, cover assemblies can be placed relative to the outer periphery member. For example, front and back cover assemblies can be connected to the outer periphery member such that the inserted components are contained within an enclosure formed by the outer periphery member and the front and back cover assemblies. In particular, the front and back cover assemblies can be placed such that a display interface of the device remains visible through a window of one of the covers. Process **300** can then end after step **308**.

[0099] For additional information on the electronic device structure and assembly processing discussed above in FIGS. **1**-**3**, see U.S. Provisional Application No. 61/300,780, filed Feb. 2, 2010 and entitled "HANDHELD ELECTRONIC DEVICES," which is hereby incorporated herein by reference.

Alignment and Protection Arrangements and Techniques

[0100] With parts of an electronic device housing being arrangement in a stack, there can be cumulative tolerances which can make alignment less precise. According to one aspect, adjoining surfaces of electronic device housings can be mounted or arranged such that adjoining surfaces are flush to a high degree of precision. Edges of portable electronic devices are susceptible to impact force, such as when dropped. According to another aspect, protective sides can be provided on edges of electronic device housings so to dissipate impact forces and thus reduce damage to electronic device housings. According to still another embodiment, an electronic device housing can have one or more of its exposed major surfaces (e.g., front or back surfaces) formed of glass. The glass surfaces can be protected by the protective sides and can be aligned so that the top surfaces of the glass surfaces and the protective sides can be substantially flush.

[0101] FIG. **4** is a flow diagram of a housing member alignment process **400** according to one embodiment of the invention. The housing member alignment process **400** serves to allow adjacent housing members to secured together while providing a flush interface therebetween.

[0102] The housing member alignment process **400** provides **402** an outer housing member for a device housing,

namely, an electronic device housing, can be provided at an assembly region (e.g., assembly station). In addition, a protective side structural member having a receptive plane for receiving the outer housing member can be provided **404**.

[0103] The outer housing member can be positioned **406** adjacent to the receptive plane of the protective side structural member. In order to ensure proper alignment to a high degree of flushness, a first force is applied **408** to push the outer housing member against a planer reference surface. Here, the planer reference surface can pertain to a flat steel surface provided at the assembly region. In one implementation, the planer reference surface can be coated with a non-stick coating (e.g. Teflon). Further, a second force can be applied **410** to push the protective side structural member against the planar reference surface. Typically, the second force can also push the protective side structural member against the outer housing member. The protective side structural member can then be secured **412** to the outer housing member. As a result, the outer housing member and the protective side structural member, once secured **412**, can represent an assembled portion of the device housing. Thereafter, the assembled portion can be removed **414** from the assembly region. After the assembled portion has been removed **414**, the housing member alignment process **400** can end.

[0104] FIG. **5** is a structural diagram of an alignment configuration **500** according to one embodiment. The alignment configuration **500** can correspond to alignment of adjacent housing members as discussed above, such as in the housing member alignment process **400** illustrated in FIG. **4**. The alignment configuration **500** includes a planar reference surface **502** that is secured in a fixed manner. An outer housing member **504** can be pushed against the planar reference surface **502** by a force F**1**. The force F**1**, as shown in FIG. **5**, can be applied at various points on an opposing surface of the outer housing member **504**. For example, in this arrangement, a top surface of the outer housing member **504** can be pressed against a surface of the planar reference surface **502**, and the force F**1** can be induced on a bottom surface of the outer housing member **504**. The force F**1** can be applied as a single structure (e.g., spring) or be a plurality of structures (e.g., series of springs). The use of a plurality of springs can provide more uniform application of force across the surface of the outer housing member **504**. In addition, a protective side structural member **506** can be provided adjacent to at least one side of the outer housing member **504**. To position the protective side structural member **506** with respect to the outer housing member **504**, in a flush manner, a force F**2** can operate to push the protective side structural member **506** against the surface of the planar reference surface **502**. The force F**2** can be applied as a single structure (e.g., spring) or be a plurality of structures (e.g., series of springs). This insures that the top surface of the protective side structural member **506** will be positioned such that its top surface is flush with the top surface of the outer housing member **504**. Additionally, if needed, a force F**3** can be applied to push the protective side structural member **506** against the side of the outer housing member **504**. Once the outer housing member **504** and the protective side structural member **506** are biased against the planar reference surface **502**, the outer housing member **504** and the protective side structural member **506** can be secured to one another. These members of the electronic device housing can be secured together in a variety of different ways. For example, these members can be held together by an adhesive, such as glue or epoxy, which can remained biased against the planar reference surface **502** while the adhesive cures. As another example, these members can be held together through mechanical structures (e.g. screws, snaps, tabs, detents, etc.).

[0105] FIG. **6** is a flow diagram of a housing member alignment process **600** according to one embodiment of the invention. The housing member alignment process **600** can combine together an outer housing member (namely, an outer glass member) and a protective side structural member for an electronic device housing. The housing member alignment process **600** operates to align external surface of these members and then secure the members to one another.

[0106] The housing member alignment process **600** can provide **602** an outer class member for an electronic device housing. A protective side structural member having a receptive plane for receiving the outer glass member can also be provided. A liquid adhesive can then be applied **606** to a portion of the outer glass member and/or a portion of the protective side structural member. The outer glass member can then be positioned **608** adjacent to the receptive plane of the protective side structural member. To impose accurate alignment that yields a high degree of flushness, a first force can be applied **610** to push the outer glass member against a planar reference surface. A second force can also be applied **612** to push the protective side structural member against the planar reference surface. This ensures that the outer glass member and the protective side structural member are positioned such that a top surface of both are tightly adjacent and flush. Thereafter, the liquid adhesive can be cured **614**. For example, the members being assembled together into an assembled part can be placed in an oven to accelerate the curing of the liquid adhesive. Once the protective side structural member and the outer glass member are secured by the cured adhesive, the assembled part can be removed **606** from the oven and the first and second forces can be removed. At this point, the assembled part includes the outer glass member together with the protective side structural member. Additionally, given the manner in which the members were assembled into the assembled part, the top surface of the outer glass member is flush with new top surface of the protective side structural member. Following the block **616**, a housing member alignment process **600** can end.

[0107] In one embodiment, the flushness provided by the alignment processing can be not more than at most 80 mm from being precisely plush. In another embodiment, the flushness provided by the alignment processing can be not more than 60 mm from being precisely flush. In still another embodiment, the flushness provided by the alignment processing can be not more than 40 mm from being precisely flush.

[0108] FIGS. **7**A-**7**D illustrate assembly of an assembled part according to one embodiment. The assembled part can be assembled in accordance with the housing member alignment process **600**. The assembled part can represent a part for an electronic device housing.

[0109] FIG. **7**A illustrates component members for the assembled part. Specifically, the component parts include an outer glass member **700** and a protective side structural member **702**. The protective side structural member **702** has an upper surface **704** that can received the outer glass member **700** when assembled, and a bottom surface **706** that provides an inner surface for the electronic device housing. The protective side structural member **702** also includes side bumpers **708** that having top surfaces **710**.

[0110] FIG. 7B illustrates an initial assembly step for the assembled part. The outer glass member **700** is held against a fixed reference structure **712**. The top surface of the outer glass member **700** is pressed against a flat reference surface provided by the fixed reference structure **712**. The output glass member **700** can be biased (i.e., pressed) against the flat reference surface by a mechanical member (e.g., spring(s)) that provides a biasing force. Additionally, the protective side structural member **702** can have liquid adhesive **714** deposited on a portion of the upper surface **704**.

[0111] FIG. 7C illustrates a subsequent step for the assembled part. Here, the protective side structural member **702** with the liquid adhesive **714** can be pressed against the flat reference surface provided by the fixed reference structure **712**. More specifically, the top surface **710** of the side bumpers **708** of the protective side structural member **702** is pressed against the flat reference surface. The protective side structural member **702** can be biased (i.e., pressed) against the flat reference surface by a mechanical member (e.g., spring (s)) that provide a biasing force. The protective side structural member **702** can be biased (i.e., pressed) against the flat reference surface by a mechanical member (e.g., spring(s)) that provide a biasing force. The mechanical member biasing the protective side structural member **702** is separate from the mechanical member biasing the outer glass member **700**. Once the assembled part is held in position, as shown in FIG. 7C, by the biasing forces, the liquid adhesive can be cured. In one embodiment, the adhesive can be cured using heat, such as by placing the assembled part in an oven. The adhesive being cured serves to secure the parts (i.e., the outer glass member **700** and the protective side structural member **702**) while compensating for tolerances of parts (e.g., in a component stack of parts) so that the top surface of the outer glass member **700** and the top surface **710** of the side bumpers **708** are flush. In one embodiment, flush means that the adjacent top surfaces are within 60 micrometers of being perfectly flush. Once the adhesive is cured, the heat can be removed and the assembled part is now assembled. Additionally, the side bumpers **708** of the protective side structural member **702** are tightly adjacent the sides (e.g., edges) of the outer glass member **700** and provide a barrier to impact forces at the sides of the glass member **700**.

[0112] FIG. 7D illustrates a subsequent assembly for the assembled part. The assembled part can be attached to another structural component of the electronic device housing. As an example, the another structural component can pertain to an outer periphery member **716** for the electronic device housing. The outer periphery member **716** can define a side surface for the electronic device housing. The outer periphery member **716** can also attach or be integral with an internal structure **718** (e.g., internal platform) that provides structural stiffness for the electronic device housing. For example, the internal structure **718** can be secured to an inner surface of the outer periphery member **716**. The internal structure **718** can be positioned offset from front and back planar boundaries of the outer periphery member **716**. As shown in FIG. 7D, the assembled part can be coupled to the outer periphery member **716** at the front planar boundary. To secure the assembled part, the protective side structural member **702** can further include or couple to attachment arms **720**. The attachment arms **720** can abut against an inner surface of the outer periphery member **716** and be secured thereto by adhesive or mechanical means (e.g., screws, tabs, snaps, etc.).

[0113] The assembled part can have parts of glass, polymer and/or metal. In one particular embodiment, the outer glass member **700** is glass, such as alumino-silicate glass; the protective side structural member **702** is polymer, such as polyarylamide; and the outer periphery member **716**, the internal structure **718** and the attachment arms can be metal, such as stainless steel.

[0114] FIG. 8A is a side view of a partial side portion of an electronic device housing **800** according to one embodiment. The partial side portion includes an outer housing member **802**. The outer housing member **802** can abut against a side member **804**. In addition, a protective side bumper **806** can be provided to protect an otherwise exposed side **808** of the outer housing member **802**. The configuration of the protective side bumper **806** can vary with implementation. Typically, the thickness of the protective side bumper **806** is thin at the portion adjacent the exposed side **808**. For example, where the thickness of the outer housing member **802** is 1 millimeter (mm), the thickness of the protective side bumper **806** can be less than 1 mm, more particularly the thickness can be about 0.8 mm. In one embodiment, the outer housing member **802** can be made of glass, the protective side bumper **806** can be made of a polymer, and the side member **804** can be made of metal.

[0115] FIG. 8B is a side view of a partial side portion of an electronic device housing **800'** according to another embodiment. Similar to FIG. 8A, the outer housing member **802** can abut against a side member **804**. The protective side bumper **806** can be provided to protect an otherwise exposed side **808** of the outer housing member **802**. In this embodiment, the side member **804'** can extend outward slightly from the outer surface of the protective side bumper **806**. In one embodiment, the outer housing member **802** can be made of glass, the protective side bumper **806** can be made of a polymer, and the side member **804'** can be made of metal.

[0116] FIG. 8C is a side view of a partial side portion of an electronic device housing **820** according to another embodiment. The partial side portion includes an outer housing member **822**. The outer housing member **820** can abut against a side member **824**. In this embodiment, the side member **824** supports the outer housing member **822** and also provide a protective side bumper **826** can be provided to protect an otherwise exposed side **828** of the outer housing member **822**. The configuration of the protective side bumper **826** can vary with implementation. Typically, the thickness of the protective side bumper **806** is thin at the portion adjacent the exposed side **828**. For example, where the thickness of the outer housing member **822** is 1 millimeter (mm), the thickness of the protective side bumper **826** can be less than 1 mm, more particularly the thickness can be about 0.8 mm. The side member **824** can couple to an internal structure **830** to provide support for the side member **824** of the electronic device housing. The internal structure **830** can, in one embodiment, include a side portion **832** embedded in the side member **824**. In one embodiment, the outer housing member **822** can be made of glass, the side member **824** as well as the protective side bumper **826** can be made of a polymer, and the internal structure **830** (including side structure **832**) can be made of metal.

[0117] FIG. 8D is a side view of a partial side portion of an electronic device housing **840** according to still another embodiment. The electronic device housing **840** is similar to the electronic device housing **820** illustrated in FIG. 8C but provides another outer housing member **842**. For example,

the outer housing member **822** can correspond to a top cover for the electronic device housing, and the outer housing member **842** can correspond to a bottom cover for the electronic device housing. The side member **824'** includes not only the protective side bumper **826** but also a protective side bumper **844**.

[0118] FIG. **9**A is a cross-sectional view of an electronic device housing **900** according to one embodiment. The electronic device housing **900** includes an outer housing member **902** supported and protected by an interface member **904**. The interface member **904** providing protective side members **906** (e.g., protective side bumpers) positioned tightly adjacent sides of the outer housing member **902**. The interface member **904** also supports the outer housing member **902** and serves to secure the outer housing member **902** to other portions of the electronic device housing **900**. In this embodiment, the interface member **904** is secured to an outer periphery member **908**. More particularly, in this embodiment, the interface member **904** includes securing features **910** (e.g., attachment arms) that are used to secure the interface member **904** (and thus the outer housing member **902**) to the outer periphery member **908**. The electronic device housing **900** can also include another outer housing member **912**. The another outer housing member **912** can, for example, be integral with or secured to the outer periphery member **908** on a side opposite the outer housing member **902**. An internal space **914** is provided internal to the electronic device housing **900** whereby various electrical components can be attached, affixed or placed so as to provide electronic operations for the electronic device.

[0119] The various members, parts or assemblies of the portable electronic device **900** can be formed of any of a variety of materials, e.g., glass, polymers or metal. In one embodiment, the outer housing member **902** is glass, the outer periphery member **908** is formed from metal or polymer (e.g., plastic), and the another outer housing member **912** is formed from glass, polymer (e.g., plastic) or metal. The interface member **904** can be formed of a polymer or from a combination of materials. For example, the protective side members **906** are to be strong; hence, a structurally strengthened polymer, such as polyarylamide, can be utilized. Also as an example, the securing features **910** can be formed from metal for increased strength. The securing features **910** if formed of metal can be combined with the balance of the interface member **904** by an over-molding process.

[0120] FIG. **9**B is a cross-sectional assembly diagram for the electronic device housing **900** shown in FIG. **9**A, according to one embodiment. The outer housing member **902** has a top surface **920** and a bottom surface **922**. The bottom surface **922** of the outer housing member **902** can be secured to a top surface **924** of the interface member **904**. For example, the outer housing member **902** can be secured to the top surface **924** of the interface member **904** using adhesive. When the outer housing member **902** is secured to the interface member **904**, the protective side members **906** are positioned at the sides (i.e., edges) of the outer housing member **902**. The protective side member **906** provides a buffer layer (e.g., bumper) that dampens impact induced at the sides of the outer housing member **902** of the electronic device housing **900**. In addition, a bottom surface **926** of the interface member **904** is placed on a top surface **928** of the outer periphery member **908**. The securing features **910** of the interface member **910** can be used to secure the interface member **904** to the outer periphery member **908**.

[0121] FIG. **10** is a cross-sectional view of an electronic device housing **1000** according to one embodiment. The electronic device housing **1000** includes a first outer housing member **1002** supported and protected by a first interface member **1004**. The first interface member **1004** provides protective side members **1006** (e.g., protective side bumpers) positioned tightly adjacent sides of the first outer housing member **1002**. The first interface member **1004** also supports the first outer housing member **1002** and serves to secure the first outer housing member **1002** to other portions of the electronic device housing **1000**. In this embodiment, the first interface member **1004** is secured to an outer periphery member **1008**. More particularly, in this embodiment, the first interface member **1004** includes first securing features **1010** that are used to secure the first interface member **1004** (and thus the first outer housing member **1002**) to the outer periphery member **1008**.

[0122] The electronic device housing **1000** can also include an internal structure **1012** that is integral with or secured to the outer peripheral member **1008**. In one embodiment, the internal structure **1012** can be secured to an inner surface of the outer periphery member **1008** such that it is offset from front and back planar boundaries of the outer periphery member **1008**. As shown in FIG. **10**, the internal structure **1012** can be secured at the mid-point of the height of the outer periphery member **1008**. A first internal space **1014** is provided internal to the electronic device housing **1000** whereby various electrical components can be attached, affixed or placed so as to provide electronic operations for the electronic device.

[0123] In this embodiment, the electronic device housing **1000** also includes similar structure on an opposite side of the electronic device housing **1000**. Namely, the electronic device housing **1000** can further include a second outer housing member **1016** supported and protected by a second interface member **1018**. The second interface member **1018** provides protective side members **1020** (e.g., protective side bumpers) positioned tightly adjacent sides of the second outer housing member **1016**. The second interface member **1018** also supports the second outer housing member **1016** and serves to secure the second outer housing member **1016** to other portions of the electronic device housing **1000**. In this embodiment, the second interface member **1018** can be secured to the outer periphery member **1008** on the opposite side from the first interface member **1004**. More particularly, in this embodiment, the second interface member **1018** includes second securing features **1022** (e.g., attachment arm) that are used to secure the second interface member **1018** (and thus the second outer housing member **1016**) to the outer periphery member **1008**. Further, a second internal space **1024** is provided internal to the electronic device housing **1000** (between the internal structure **1012** and the second interface member **1018**) whereby various electrical components can be attached, affixed or placed so as to provide electronic operations for the electronic device.

[0124] In one embodiment, the first outer housing member **1002** can represent a top outer surface for the portable electronic device, and the second outer surface housing **1016** can represent a bottom outer surface housing. In one embodiment, both the first outer housing member **1002** and the second outer housing member **1016** are glass (e.g., class covers).

[0125] In FIGS. **9**A, **9**B and **10**, the protective side members (e.g., protective side bumpers) are thin layer of material

positioned tightly adjacent sides of the outer housing member, thereby buffering impact at the sides of the outer housing members. In one embodiment, the protective side members are to be strong; hence, a structurally strengthened polymer, such as polyarylamide, can be utilized. The polyarylamide can be strengthened by containing glass fibers. One source of strengthened polyarylamide is Ixef polyarylamide (PARA) from Solvay Advanced Polymers, L.L.C which can contain glass fiber reinforcement. Additionally, since the protective side members are tightly adjacent sides of the outer housing member, the respective materials used for the protective side members and the outer housing member. Specifically, the Coefficient of Thermal Expansion (CTE) of the respective materials, if not controlled, can produce undesired stress on the sides of the outer housing member. For example, with an outer housing member of glass, its CTE is about 10 millimeters/meter/° C. Hence, ideally, for this example the CTE of the material for the protective side members would be about 10 millimeters/meter/° C. Although plastics tend to have CTE's (e.g., roughly 100 millimeters/meter/° C.) that are dramatically higher than that of glass, some manufactured polymers, such as polyarylamide, can have CTE's (e.g., roughly 30 millimeters/meter/° C.) that are substantially closer to that of glass and thereby would, if used, induce less stress on the sides of the outer housing member. For example, in one embodiment, a manufactured polymer for such use could have a CTE less than or equal to about 50 millimeters/meter/° C., and in another embodiment, a manufactured polymer for such use could have a CTE less than or equal to about 35 millimeters/meter/° C. Also, as noted above, the thickness of the protective side member can be thin, for example, the thickness can be not more than about 1 mm in one embodiment.

[0126] In still other embodiments, the protective side materials can be formed from multiple materials that can be alternated, intertwined or layered. The later of material against the edges of the outer housing member of glass can have a CTE relatively close to that of glass while an outer layer can have a higher CTE can permit a greater range of material, such as polymers (e.g., plastics).

[0127] The protective side members are able to be thin yet be cosmetically unintrusive. For example, in some embodiments, the thickness (t**1**) for the protective side member can be less than 1 mm (e.g., 0.8 mm). Also, in some embodiments, the thickness (t**2**) of the outer housing member can be less than 5 mm (e.g., 1 mm). However, these thicknesses are exemplary and vary with the size of the electronic device housing and with desired strength. Using a strengthened material for the protective side members as noted above can also be advantageous. Nevertheless, the provisioning of thin protective side members for outer housing members, such as glass covers, facilitates providing portable electronic device housings that are compact and thin yet resistant to side impact damage to the outer housing members.

[0128] FIGS. **11**A, **11**B and **12** are structurally similar to FIGS. **9**A, **9**B and **10**, respectively. However, the configuration of the protective side members is different. The protective side members illustrated in FIGS. **11**A, **11**B and **12** form corners for the electronic device housing and, therefore, are typically thicker than the protective side members illustrated in FIGS. **9**A, **9**B and **10**. As an example, in one embodiment, the thickness of the protective side member is approximately the thickness of the outer housing member.

[0129] FIG. **11** A is a cross-sectional view of an electronic device housing **1100** according to one embodiment. The electronic device housing **1100** includes an outer housing member **1102** supported and protected by an interface member **1104**. The interface member **1104** providing protective side members **1106** (e.g., protective side bumpers) positioned tightly adjacent sides of the outer housing member **1102**. The interface member **1104** also supports the outer housing member **1102** and serves to secure the outer housing member **1102** to other portions of the electronic device housing **1100**. In this embodiment, the interface member **1104** is secured to an outer periphery member **1108**. More particularly, in this embodiment, the interface member **1104** includes securing features **1110** (e.g., attachment arms) that are used to secure the interface member **1104** (and thus the outer housing member **1102**) to the outer periphery member **1108**. The electronic device housing **1100** can also include another outer housing member **1112**. The another outer housing member **1112** can, for example, be integral with or secured to the outer periphery member **1108** on a side opposite the outer housing member **1102**. An internal space **1114** is provided internal to the electronic device housing **1100** whereby various electrical components can be attached, affixed or placed so as to provide electronic operations for the electronic device.

[0130] The various members, parts or assemblies of the portable electronic device **1100** can be formed of any of a variety of materials, e.g., glass, polymer or metal. In one embodiment, the outer housing member **1102** is glass, the outer periphery member **1108** is formed from metal or polymer (e.g., plastic), and the another outer housing member **1112** is formed from glass, polymer (e.g., plastic) or metal. The interface member **1104** can be formed of a polymer or from a combination of materials. For example, the protective side members **1106** are to be strong; hence, a structurally strengthened polymer, such as polyarylamide, can be utilized. The polyarylamide can be strengthened by containing glass fibers. Also as an example, the securing features **1110** can be formed from metal for increased strength. The securing features **1110** if formed of metal can be combined with the balance of the interface member **1104** by an over-molding process.

[0131] FIG. **11**B is a cross-sectional assembly diagram for the electronic device housing **1100** shown in FIG. **11**A, according to one embodiment. The outer housing member **1102** has a top surface **1120** and a bottom surface **1122**. The bottom surface **1122** of the outer housing member **1102** can be secured to a top surface **1124** of the interface member **1104**. For example, the outer housing member **1102** can be secured to the top surface **1124** of the interface member **1104** using adhesive. When the outer housing member **1102** is secured to the interface member **1104**, the protective side members **1106** are positioned at the sides (i.e., edges) of the outer housing member **1102**. The protective side member **1106** provides a buffer layer (e.g., bumper) that dampens impact induced at the sides of the outer housing member **1102** of the electronic device housing **1100**. In addition, a bottom surface **1126** of the interface member **1104** is placed on a top surface **1128** of the outer periphery member **1108**. The securing features **1110** of the interface member **1110** can be used to secure the interface member **1104** to the outer periphery member **1108**.

[0132] FIG. **12** is a cross-sectional view of an electronic device housing **1200** according to one embodiment. The electronic device housing **1200** includes a first outer housing

member **1202** supported and protected by a first interface member **1204**. The first interface member **1204** provides protective side members **1206** (e.g., protective side bumpers) positioned tightly adjacent sides of the first outer housing member **1202**. The first interface member **1204** also supports the first outer housing member **1202** and serves to secure the first outer housing member **1202** to other portions of the electronic device housing **1200**. In this embodiment, the first interface member **1204** is secured to an outer periphery member **1208**. More particularly, in this embodiment, the first interface member **1204** includes first securing features **1210** that are used to secure the first interface member **1204** (and thus the first outer housing member **1202**) to the outer periphery member **1208**.

[0133] The electronic device housing **1200** can also include an internal structure **1212** that is integral with or secured to the outer peripheral member **1208**. In one embodiment, the internal structure **1212** can be secured to an inner surface of the outer periphery member **1208** such that it is offset from front and back planar boundaries of the outer periphery member **1208**. As shown in FIG. **12**, the internal structure **1212** can be secured at the mid-point of the height of the outer periphery member **1208**. A first internal space **1214** is provided internal to the electronic device housing **1200** whereby various electrical components can be attached, affixed or placed so as to provide electronic operations for the electronic device.

[0134] In this embodiment, the electronic device housing **1200** also includes similar structure on an opposite side of the electronic device housing **1200**. Namely, the electronic device housing **1200** can further include a second outer housing member **1216** supported and protected by a second interface member **1218**. The second interface member **1218** provides protective side members **1220** (e.g., protective side bumpers) positioned tightly adjacent sides of the second outer housing member **1216**. The second interface member **1218** also supports the second outer housing member **1216** and serves to secure the second outer housing member **1216** to other portions of the electronic device housing **1200**. In this embodiment, the second interface member **1218** can be secured to the outer periphery member **1208** on the opposite side from the first interface member **1204**. More particularly, in this embodiment, the second interface member **1218** includes second securing features **1222** (e.g., attachment arms) that are used to secure the second interface member **1218** (and thus the second outer housing member **1216**) to the outer periphery member **1208**. Further, a second internal space **1224** is provided internal to the electronic device housing **1200** (between the internal structure **1212** and the second interface member **1218**) whereby various electrical components can be attached, affixed or placed so as to provide electronic operations for the electronic device.

[0135] In one embodiment, the first outer housing member **1202** can represent a top outer surface for the portable electronic device, and the second outer surface housing **1216** can represent a bottom outer surface housing. In one embodiment, both the first outer housing member **1202** and the second outer housing member **1216** are glass (e.g., class covers).

[0136] In FIGS. **11**A, **11**B and **12**, the protective side members (e.g., protective side bumpers) are thin layer of material positioned tightly adjacent sides of the outer housing member, thereby buffering impact at the sides of the outer housing members. In these embodiments, the protective side members are rounded at corners of the electronic device housing. For example, in some embodiments, the thickness (t**3**) for the protective side member can be less than 5 mm (e.g., 1 mm). Also, in some embodiments, the thickness (t**4**) of the outer housing member can be less than 5 mm (e.g., 1 mm). However, these thicknesses are exemplary and vary with the size of the electronic device housing and with desired strength. Using a strengthened material for the protective side members as noted above can also be advantageous. Nevertheless, the provisioning of thin protective side members for outer housing members, such as glass covers, facilitates providing portable electronic device housings that are compact and thin yet resistant to side impact damage to the outer housing members.

[0137] FIG. **13** is a flow diagram of an outer member assembly process **1300** according to one embodiment of the invention. In this example, the outer member is an outer glass member. The outer glass member can be secured **1302** to a protective side member. As an example, the processing performed to secure the outer glass member to the protective side member can, in certain embodiments, use the housing member alignment process **400**, **600** illustrated in FIGS. **4** and **6**, respectively.

[0138] After the outer glass member has been secured **1302** to the protective side member, the glass assembly can be positioned **1304** in an opening of an outer periphery member. After the glass assembly has been positioned, the glass assembly at the opening of the outer periphery member can be secured **1306**. The glass assembly, namely, the outer glass member, can thus operate as an outer surface for the electronic device housing. Following the block **1306**, the outer member assembly process **1300** can end.

[0139] In one embodiment, the outer glass member can represent a front (or top) surface of the electronic device housing. In another embodiment, the outer glass member can represent a back (or bottom) surface of the electronic device housing. In general, the outer member assembly process **1300** can represent processing suitable for any exposed surface of an electronic device housing that is formed of a glass member. In still another embodiment, the electronic device housing may utilize an outer glass member for a front surface of the electronic device housing and may utilize an outer glass member for a back surface of the electronic device housing.

[0140] As discussed above, such as in FIGS. **10** and **13**, an electronic device housing can be substantially made of glass. For example, an electronic device housing might have at least 75% of its exterior as glass. In one implementation, front and bottom surfaces of an electronic device housing can be glass while side surface are some material other than glass (e.g., metal, plastic).

[0141] In the case of portable electronic devices, housings are banged against or rub against various surfaces. When plastic or metal housing surfaces are used, the surfaces tend to become scratched. On the other hand, with glass housing surfaces (e.g., glass covers), the surfaces are much more scratch resistant. Moreover, glass housing surfaces offer radio transparency, while metal housing surfaces disturb or hinder radio communications. In one embodiment, an electronic device housing can use glass housing members (e.g., glass covers) for a front surface and a back surface of the electronic device housing. For example, a front surface formed from a glass housing member can be transparent to provide visual access to a display device positioned behind the glass housing member at the front surface, while a back surface formed

from a glass housing member can be transparent or non-transparent. Non-transparency, if desired, can conceal any interior components within the electronic device housing. In one embodiment, a surface coating or film can be applied to the glass housing member to provide non-transparency or at least partial translucency. Such a surface coating or file can be provided on an inner surface or an outer surface of the glass housing member. The protective side members and the interface members discussed herein can be optionally used to protect and/or assembly the glass housing members.

[0142] FIG. **14** is a side view of a partial side portion of an electronic device housing **1400**. The partial side portion illustrates includes a first interface assembly **1402** and a second interface assembly **1404**. The interface assemblies **1402**, **1404** can also be referred to as interface members. The interface assembly **1402** includes a support and protection member **1406** and an attachment member **1408**. Similarly, the interface assembly **1404** includes a support and protection member **1410** and an attachment member **1412**. The support and protection members **1406** can support a first outer housing member and provide a protective side member therefore as discussed above. Similarly, the support and protection members **1410** can support a second outer housing member and provide a protective side member therefore as discussed above. The attachment member **1408** can serve to attach and secure the interface assembly **1402** to a side member **1414**, and the attachment member **1412** can serve to attach and secure the interface assembly to the side member **1414**. An attachment device **1416** (e.g., screw, bolt) can be provided to tightly secure the first support and protection member **1406** with respect to the side member **1414**. Likewise, an attachment device **1418** (e.g., screw, bolt) can be provided to tightly secure the second support and protection member **1410** with respect to the side member **1414**.

[0143] Although only a single attachment device **1416** is shown for the attachment member **1408**, it should be understood that several attachment devices would ordinarily be used to reliable secure the first interface assembly **1402** to the side member **1414**. Likewise, although only a single attachment device **1418** is shown for the attachment member **1412**, it should be understood that several attachment devices would ordinarily be used to reliable secure the second interface assembly **1404** to the side member **1414**. Also, although the embodiment illustrated in FIG. **14** supports outer housing member at opposite ends, it should be understood that in other embodiments the electronic device housing may only use a single outer housing member.

Attachment Structures and Techniques

[0144] According to another aspect, apparatus, systems and methods for robustly attaching a cover portion of an electronic device to a bottom portion, e.g., a housing portion, of the electronic device are described. The cover portion may generally include a frame (e.g., interface member) into which a glass member has been inserted. Attachment members (e.g., arms, tabs) can be coupled to, e.g., insert molded into, a cover portion, and can be arranged to substantially engage with a housing portion such that the cover portion is effectively held against the housing portion. The attachment members can be used to screw or otherwise fasten the cover portion to the housing. In general, receptacles of the housing portion are arranged to substantially capture, mate or otherwise engage attachment members of the cover portion.

[0145] In one embodiment, the cover portion is held against the housing portion such that a contact surface of the cover portion interfaces with a contact surface of the housing portion, e.g., such that there is effectively no gap between the contact surfaces. More generally, the cover portion may be held against the housing portion such that the size of any space between the contact surface of the cover portion and the contact surface of the housing portion may be controlled. For example, to hold the cover portion against the housing portion, a protrusion that is a part of or is otherwise attached to the cover portion can be engaged with a receptacle that is a part of or is otherwise attached on the housing portion.

[0146] The apparatus, systems, and methods of the present invention allow for the formation of a robust coupling between a cover of a device, such as a handheld electronic device, and a housing of such a device. Handheld electronic devices may generally include, but are not limited to including, mobile phones, media players, user input devices (e.g., mouse, touch sensitive devices), personal digital assistants, remote controls, electronic book readers, etc. The apparatus, systems, and methods may also be used for covers (e.g., covers with glass members), or displays for other relatively larger form factor electronic devices such as portable computers, tablet computers, displays, monitors, televisions, etc.

[0147] In general, a device that includes a cover which is securely held to a housing is relatively durable or robust. A secure coupling between the cover and the housing may be arranged in an interior volume of a device such that the coupling does not interfere with the exterior of the device. The aesthetic qualities of a device can be enhanced. In one embodiment, a cover and a housing interface together with substantially no gap space therebetween. More generally, the aesthetic or visual qualities of a device may be substantially improved by controlling the size of a gap between a cover and a housing when the cover and the housing are assembled. In addition, when the size of a gap between a cover and a housing may be substantially minimized, the profile of a device formed from the cover and the housing may be relatively thin.

[0148] FIG. **15**A is a diagrammatic perspective representation of a housing to which a cover, e.g., a cover which includes a glass member held by a frame, is assembled in accordance with an embodiment of the present invention. An assembly **1502** includes a cover **1508** which is mounted or substantially secured to a housing **1512**. In one embodiment, cover **1508** is removably attached to housing **1512** such that although cover **1508** is securely engaged to housing **1512** when a coupling is desired. However, in some embodiments, the cover **1508** is removably attached such that cover **1508** can be subsequently disengaged.

[0149] FIG. **15**B is a diagrammatic cross-sectional side-view representation of a cover **1508** assembled to housing **1512**. As shown, the size of cover **1508** and the size of housing **1512** as compared to FIG. **15**A, are exaggerated for purposes of illustration. Cover **1508** and housing **1512** are coupled at an interface **1530** such that a gap **1528** between cover **1508** and housing **1512** may be controlled. In one embodiment, gap **1528** is essentially minimal, and surfaces of cover **1508** and housing **1512** may come into contact at and near interface **1530**. Interface **1530** may include mechanical coupling arrangements, as will be discussed below, that allow cover **1508** to be mounted to housing **1512**. As shown, interface **1530** is typically located in or near an inner volume defined by housing **1512** and cover **1508**.

[0150] With reference to FIG. **16**, one method of assembling an electronic device will be described in accordance with one embodiment. A method **1601** of assembling an electronic device begins at step **1605** in which a housing, e.g., an outer periphery member, is formed. In general, one or more components may form the housing. For example, two or more components may be joined or otherwise combined to form the housing. Forming the housing may also include attaching or otherwise creating attachment features on the housing that are configured to facilitate mounting a cover on the housing.

[0151] In step **1609**, a cover is formed. Forming a cover may include, but is not limited to including, obtaining a frame, and attaching a glass member to the frame. It should be appreciated that forming a cover may also include effectively attaching or otherwise creating attachment features, as for example using an injection molding process, to the cover that are configured to facilitate mounting the cover to the housing. When attachment features are attached to the cover using an insert molding process, cover can be formed at least partially from a plastic material.

[0152] Once the housing and the cover are formed, internal structural components, e.g., an internal platform that can include electronic components, can be substantially connected to the housing in step **1613**. For example, an internal member may be inserted within the housing and connected to several portions of the housing to define a structural component.

[0153] After the internal structural components are substantially connected to the housing, components may be inserted in step **1617** into the housing. For example, components, such as electrical components may be inserted from both sides of the housing. The cover may then be mounted on the housing in step **1621**. Mounting the cover on the housing may include, but is not limited to including, engaging attachment features of the cover and the housing. The method of assembling an electronic device can be completed once the cover is mounted on the housing.

[0154] In one embodiment, a cover may be mounted on a housing through the use of screws. Referring next to FIG. **17**, an assembly that includes side screws arranged to couple a cover to a housing will be described in accordance with one embodiment. FIG. **17** is a diagrammatic side-view representation of an interior surface of an assembly **1702**. Assembly **1702** includes a portion of a cover **1708** and a portion of a housing **1712**. Tabs **1732** are inserted in or otherwise attached to cover **1708**. In one embodiment, tabs **1732** are metal tabs that are insert molded into cover **1708** and effectively protrude from cover **1708**. Metal tabs may be formed from sheet metal of any suitable thickness, as for example a thickness of approximately 0.5 mm. Typically, tabs **1732** include slots through which screws **1736** may be inserted. In other words, tabs **1732** are generally slotted tabs. Housing **1712** includes screw receptacles (not shown), e.g., threaded screw holes, which are arranged to accommodate screws **1736**.

[0155] When screws **1736** are used to secure tabs **1732** and, thus, cover **1708** to housing **1712**, washers **1740** may be positioned between heads of screws **1736** and tabs **1732**. Tabs **1732** are secured to housing **1712** when screws **1736** are screwed into screw receptacles (not shown) created in housing **1712**. Tabs **1732**, as shown, are secured to a surface of housing **1712** that is different from a surface of housing **1712** that essentially comes into contact with cover **1708**.

[0156] FIG. **18** is a diagrammatic cross-sectional representation of a coupling that utilizes a side screw and a slotted tab in accordance with one embodiment. A housing **1812** has an opening **1844** defined therein. In the described embodiment, opening **1844** is a threaded screw hole that may be formed into a side of housing **1812**. A screw **1836** which is used to secure a slotted tab **1832**, i.e., a slotted tab **1832** that is attached to or otherwise coupled to a cover (not shown), to housing **1812** passes through a washer **1840** and a slot in slotted tab **1832**, and is screwed into housing **1812**. Washer **1840** is generally used to promote thread engagement, i.e., washer **1840** enables a longer threaded length of screw **1836**, and provides tolerances. It should be appreciated that washer **1840** may be optional.

[0157] In lieu of using screws to robustly mount a cover to a housing, other types of couplings may be used to robustly mount a cover to a housing. Another coupling that may be used to mount a cover to a housing includes a lobster snap and an internal structure (e.g., midplate). FIG. **19** is a diagrammatic cross-sectional representation of an assembly that includes a lobster snap and a midplate that cooperate to couple a cover frame to a housing in accordance with one embodiment. An assembly **1902** includes a portion of a cover **1908** and a portion of a housing **1912**. A lobster snap **1948** is mounted in or otherwise attached to cover **1908**. Lobster snap **1948**, which may be formed from a metal that is insert molded into cover **1908**, is arranged to be engaged by a midplate **1952** coupled to housing **1912**. In one embodiment, lobster snap **1948** is formed from a compliant metal that is arranged to deflect from a "rest" position when being pushed through an opening defined in midplate **1952**, and to substantially return to the rest position once inserted through the opening. The thickness of the metal used to form lobster snap **1948** may vary widely. In one embodiment, lobster snap **1948** may be formed from a sheet metal with a thickness of approximately 0.3 mm.

[0158] Midplate **1952**, which may be formed from metal, may be coupled to housing **1912** using any suitable method. By way of example, midplate **1952** may be welded into an interior surface of housing **1912**. Referring next to FIG. **20**, a housing to which a midplate is coupled, e.g., by welding, can be described in accordance with one embodiment. A housing **2012**, which may be formed from metal, has an exterior surface (not shown) and an interior surface **2058**. A midplate **2052**, which may be a piece of sheet metal with at least one cut-out **2056** defined at an edge, is welded to interior surface **2058**. When midplate **2052** is welded to interior surface **2058**, cut-out **2056** cooperates with interior surface **2058** to define an opening through which a lobster snap, e.g., lobster snap **1948** of FIG. **19**, may be inserted.

[0159] Another suitable coupling that allows a cover to be mounted on a housing is a snap arrangement that includes a bracket configured to accommodate a tab. Such a bracket may be mounted on a housing, and may include a complaint snap which is arranged to engage a tab coupled to a cover. FIG. **21** is a diagrammatic representation of a cover piece having an insert molded tab and a housing having a bracket configured to accommodate the tab in accordance with one embodiment. An assembly **2102**, which is shown in a disassembled form for ease of illustration, includes a portion of a cover **2108** and a portion of a housing **2112**. Cover **2108** includes a tab or a hook **2060** in which an opening is defined. Tab **2160**, which may be formed from a sheet metal of any suitable thickness, e.g., a thickness of approximately 0.5 mm, may be insert molded into cover **2108**. Housing **2112** has a bracket **2164**

coupled thereto. Bracket **2164**, which may be formed from a metal, may be welded to a surface, e.g., an interior surface, of housing **2112**.

[0160] A compliant snap **2168** is formed in bracket **2164**, and is configured to engage with tab **2160** when tab **2160** is inserted through an opening **2172**, e.g., a "doghouse" snap opening," defined by bracket **2164** and an interior surface of housing **2112**. A compressive force is generally applied by compliant snap **2168** against tab **2160** to secure tab **2160** within opening **2172** and, thus, to hold cover **2108** substantially against housing **2112**.

[0161] FIG. **22** is a process flow diagram which illustrates a method of creating a device that includes a cover piece having an insert molded tab and a housing having a bracket configured to accommodate the tab, as for example described above with respect to FIG. **21**, in accordance with one embodiment. A method **2201** of creating a device that includes a cover piece which is mounted to a housing using a coupling that includes a tab and a bracket begins at step **2205** in which brackets, i.e., brackets which include a snap component, can be welded around the perimeter of the sides of a housing. Brackets may, for example, be same or similar to bracket **2164** of FIG. **21**. Any number of brackets may generally be welded around the perimeter of the sides of a housing. By way of example, ten brackets may be welded around the perimeter of the housing. It should be appreciated that brackets may also be attached to the housing using methods other than welding.

[0162] Once brackets are welded or, more generally, attached to the perimeter of the sides of the housing, tabs or hooks can be insert molded to cover support in step **2209**. Then, in step **2213**, a glass piece is coupled to the cover support to form an overall cover part. In one embodiment, the cover support may be a frame within which the glass piece may be secured. Any suitable method may typically be used to couple the glass piece to the cover piece.

[0163] After the overall cover part is formed, process flow moves to step **2217** in which internal components are placed within an interior volume defined within the housing. The internal components generally include, but are not limited to including, electronic components. The overall cover part is assembled against the housing in step **2221** such that the tabs in the cover piece are substantially inserted through doghouse openings in the brackets welded to the housing. When tabs are inserted through doghouse openings, complaint snaps of the brackets may engage the tabs to hold the overall cover part against the housing. Upon assembling the overall cover part against the housing such that tabs go through doghouse openings in brackets, the method of creating a device is completed.

[0164] Although only a few embodiments of the invention have been described, it should be understood that the invention may be embodied in many other specific forms without departing from the spirit or the scope of the present invention. By way of example, a cover has generally been described as being removably coupled to a housing. Screws may be unscrewed to remove a cover from a housing, snaps may be disengaged from a midplate, and tabs may be disengaged from a snap. The ability to substantially disengage or decouple a cover from a housing may enable maintenance and repairs to be performed on components held by the housing. In some embodiments, however, cover may be substantially irremovably coupled to a housing.

[0165] While a cover has generally been described as including a cover support (e.g., frame) to which a glass member is attached, it should be appreciated that the cover itself may be a glass member. In an embodiment in which the cover itself is a glass member, attachment features such as tabs and snaps may be glued directly to the glass member or indirectly to the glass member. When attachment features are glued indirectly to the glass member, the attachment features may be insert molded into pieces of plastic, and the pieces of plastic may be glued or otherwise attached to the glass member.

[0166] As shown for example in FIGS. **17** and **19**, the side of a housing which is associated with the engagement of a tab of a cover part is not the same as the side of the housing which interfaces with, e.g., comes substantially into contact with, the cover part. That is, the side of a housing that is used to engage a cover is different from the side or surface of the housing that is substantially sealed against the cover. It should be appreciated that in lieu of the housing substantially being sealed against the cover when the housing engages the cover, there may instead be a gap between the housing and the cover. In one embodiment, a material such as a compliant material may be placed in the gap between the housing and the cover.

[0167] Any number of coupling arrangements that allow a cover to be mounted to a housing may generally be included in an electronic device. Coupling arrangements are generally arranged along an interior periphery of an electronic device, and the number of coupling arrangements in an electronic device may be dependent upon factors including, but not limited to including, the size of the electronic device and the space available in the interior of the electronic device. In one embodiment, between approximately ten and approximately twenty coupling arrangements may be included in an electronic device. It should be appreciated, however, that fewer than ten and more than twenty coupling arrangements may generally be included in an electronic device.

Optical Lens Formation

[0168] According to still another aspect, an optical lens can be formed from a formed optical adhesive. The optical lens can, for example, be used as a lens for a camera flash of a portable electronic device. A mold can be used to form a lens from an optical adhesive that can be cured while being molded. For example, the optical adhesive can be a liquid adhesive that can be cured by ultraviolet (UV) radiation. In one embodiment, a mold (e.g., steel mold) having a lens configuration can be applied to the uncured optical adhesive, and then UV radiation applied to cure the optical adhesive. Once cured, the mold can be removed and the optical lens has been formed. In one particular embodiment, the optical lens can be formed on an inner surface of a glass housing member for a portable electronic device, and the curing of the optical adhesive to form the optical lens can be performed by UV radiation that is directed to the optical adhesive through the glass housing member. In another particular embodiment, the optical lens can be formed on an optical substrate (e.g., clear plastic carrier), and then the optical substrate can later be mounted in a portable electronic device, such as on an inner surface of a glass housing member for the portable electronic device.

[0169] In one embodiment, the portable electronic device having the optical lens formed from the optical adhesive can be configured to include a housing surface that has at least an opening or transparent portion. The portable electronic device can also include a camera and a camera flash light element for producing light. The optical lens receives at least a portion of light produced by the camera flash light element,

and directs the received light through the opening or transparent portion of the housing surface. The optical lens can be formed from an optical adhesive that is molded and cured into a predetermined lens configuration.

Cover Assembly Structure and Assembly

[0170] According to still another aspect, a cover assembly, such as a back cover assembly, can be configured to support and protect an outer glass member. The cover assembly can form part of a housing for an electronic device. The cover assembly can also include a distinct glass lens, attachment members, and structural support.

[0171] FIGS. **23**A-**23**C illustrate perspective diagrams of a back cover assembly **2300** according to one embodiment. The back cover assembly **2300** can, for example, represent one implementation of the back cover assembly **260** illustrated in FIG. **2**B. The back cover assembly **2300** can also represent the assembly of the second outer housing member **1016** and the second interface member **1018** (with the protective side members **1020**) illustrated in FIG. **10**, and/or the assembly of the second outer housing member **1216** and the second interface member **1218** (with the protective side members **1220**) illustrated in FIG. **12**.

[0172] FIG. **23**A illustrates a front perspective diagram for the back cover assembly **2300** according to one embodiment. The back cover assembly **2300** can include an interface member **2302** and a glass member **2304** (e.g., glass plate). The interface member **2302** provides a support structure that can be secured to a base housing. In one embodiment, the interface member **2302** can be removably secured to the base housing.

[0173] The back cover assembly **2300** can be secured to the base housing in any of a variety of ways. In the embodiment of the interface member **2302** illustrated in FIG. **23**A, the interface member **2302** includes one or more tabs **2306** and one or more hooks **2308**. The one or more tabs **2306** and the one or more hooks **2308** are used to secure the back cover assembly **2300** to the base housing, such as the outer periphery member **220** discussed above. The one or more hooks **2306** can include threaded openings (e.g., holes) that can receive attachment screws, which serve to firmly secure the back cover assembly **2300** to the base housing (e.g., the outer periphery member **220**). The attachment screws can prevent removal of the back cover assembly **2300** from the base housing. However, by removal of the attachment screws, the back cover assembly **2300** can then be removed.

[0174] The glass member **2304** is a thin glass sheet that is configured to fit within a recess provided by the interface member **2302**. In one embodiment, while within the recess, the sides (e.g., edges) of the glass member **2304** can be protected by protective side structural members. A glass piece **2310** and an optical barrier **2312** can be coupled to the glass member **2304**. The glass piece **2310** can be provided for an image acquisition device (e.g., camera) that is provided within the base housing for the electronic device. The glass piece **2310** is separate from the glass member **2304**. The glass piece **2310** can also provide different optical properties than those of the glass member **2304**. For example, the glass piece **2310** may (itself or via a coating) provide optical filtering (e.g., infrared filtering) or magnification. In other words, the glass piece **2310** can act as a lens, a filter or both.

[0175] The size, dimensions and materials for the components of the housing for the electronic device can vary with different embodiments. In the case of portable electronic devices, the thickness of the back cover assembly **2300** (excluding the one or more tabs **2306** and the one or more hooks **2308**) can be about 5 millimeters or less. For thin, portable electronic devices (such as handheld electronic devices), the thickness of the back cover assembly **2300** (excluding the one or more tabs **2306** and the one or more hooks **2308**) can be about 2 millimeters or less millimeters. Moreover, the thickness of the glass member **2304** can be about 1 millimeter or less. For example, the thickness of the glass of the glass member **2304** can be about 0.3 to 0.6 micrometers. The glass member **2304** is glass (e.g., alumina silicate or soda lime glass). However, in alternative embodiments, the glass member **2304** could be replaced by a member that is made (in whole or in part) of metal, ceramic and/or plastic material.

[0176] FIG. **23**B illustrates a rear perspective diagram for the back cover assembly **2300** according to one embodiment. The interface member **2302** primarily extends around a periphery of the back cover assembly **2300**. The interface member **2302** can be made from a polymer. The interface member **2302** illustrates a lens holder **2314** to secure the glass piece **2310** to the interface member **2302**. The interface member **2302** can also include a reinforcement plate **2316** that serves to strengthen the interface member **2302**. The reinforcement plate **2316** can be formed of metal, such as stainless steel. The reinforcement plate **2316** is a separate piece from an outer periphery support portion **2318**. The reinforcement plate **2316** can be secured to the outer periphery support portion **2318**. For example, the reinforcement plate **2316** can be inserted into the outer periphery support portion **2318** had held in place with slots and/or tabs. As another example, the outer periphery portion **2318** can be insert molded around portions of the reinforcement plate **2316** to secure the reinforcement plate **2316** to the outer periphery boundary **2318**. Additionally, in one embodiment, the one or more tabs **2306** and/or the one or more hooks **2308** can be strengthened by features of the reinforcement plate **2316**. For example, the one or more hooks **2308** can be structurally reinforced by features of the reinforcement plate **2316** that can extend upward from the reinforcement plate **2316** into or adjacent the one or more hooks.

[0177] FIG. **23**C illustrates an assembly diagram for the back cover assembly **2300** according to one embodiment. The assembly of the back cover assembly **2300** can provide the interface member **2302** having the outer periphery support portion **2318** secured or integral thereto. A layer of adhesive **2320** can be provided between the reinforcement plate **2316** and the interface member **2302**. The layer of adhesive **2320** can be applied as a film, spray, tape or coating. Besides the layer of adhesive **2320**, liquid adhesive can also be deposited in certain areas where the layer of adhesive **2320** is not present. The glass member **2304** can be pressed against the layer of adhesive **2320** (and liquid adhesive) so that the glass member **2304** can be attached to the interface member **2302**. Specifically, the glass member **2304** once aligned and attached to the interface member **2302** is not only secured thereto but also has its sides (edges) protected by the outer periphery support portion **2318**. By adhering the glass member **2304** to a substantial amount of its surface area, the glass member **2404** is reliably secured, such that in the event of breakage of the glass member **2304**, pieces of the glass member **2304** will remain secured to the adhesive and this the back cover assembly **2300**.

[0178] Additionally, a back cover assembly can also include one or more features to facilitate image acquisition. In

one embodiment, the back cover assembly **2300** can also include an opening **2322** in the interface member **2302** for image acquisition components. Within the base housing there can be provided an image acquisition device (generally, denoted as a camera), and the opening **2322** in the interface member **2300** can be aligned with the position of the image acquisition device. Additionally, the glass member **2304** can include an opening **2324** for receiving the glass piece **2310** as well as the lens holder **2314** that contains glass piece **2310**. An adhesive ring **2326** can be imposed between the lens holder **2314** and the rear side of the glass member **2304** such that the adhesive ring **2326** is disposed around the opening **2324** so as to secure the lens holder **2314** against the rear side of the glass member **2304**.

[0179] FIG. **24** illustrates an assembly diagram for the glass member **2304** according to one embodiment. Although the glass member **2304** is primarily a glass component form from a piece of glass **2400**, other components or materials can be adhered to the piece of glass **2400** to make it better suited for its intended use as a back cover portion of housing for an electronic device. Specifically, physical vapor deposition (PVD) of metal (e.g., aluminum) can provide marking on the piece of glass **2400**. The marking can include graphic (e.g., logos) **2404** or text **2406**. In this embodiment, the marking can be provided on an inside surface of the piece of glass **2400**. The glass member **2304** can also include a masking layer **2408**. The masking layer **2408** can also be provided on the inside surface of the piece of glass **2400**. The masking layer **2408** can color the otherwise translucent glass of the piece of glass **2400**. The masking layer **2408** can render the glass member opaque so as to obscure or hide the appearance of components behind the piece of glass **2400**. Because the marking and the masking layer **2408** are on the inside surface of the piece of glass **2400**, they are protected by the piece of glass **2400** and this unlikely to be damaged during use. Additionally, in one embodiment, a coating layer **2410** can be applied to an outer surface of the piece of glass **2400**. The coating layer **2410** can serve to reduce visibility of finger marks of a user from appearing on the outer surface of the piece of glass **2400**. The coating layer **2410** can provide an anti-fingerprinting coating (e.g., Anti-fingerprint Fluorosilicate Coating) that can reduce surface contamination (smudging, staining) on the piece of glass **2400** (e.g., anti-smudge coating).

Miscellaneous

[0180] In general, the steps associated with the methods of the present invention may vary widely. Steps may be added, removed, altered, combined, and reordered without departing from the spirit or the scope of the present invention.

[0181] The various aspects, features, embodiments or implementations of the invention described above may be used alone or in various combinations. For example, side screws and lobster snaps may cooperate to attach a cover to a housing.

[0182] While this specification contains many specifics, these should not be construed as limitations on the scope of the disclosure or of what may be claimed, but rather as descriptions of features specific to particular embodiment of the disclosure. Certain features that are described in the context of separate embodiments may also be implemented in combination. Conversely, various features that are described in the context of a single embodiment may also be implemented in multiple embodiments separately or in any suitable subcombination. Moreover, although features may be described above as acting in certain combinations, one or more features from a claimed combination can in some cases be excised from the combination, and the claimed combination may be directed to a subcombination or variation of a subcombination.

[0183] While embodiments and applications have been shown and described, it would be apparent to those skilled in the art having the benefit of this disclosure that many more modifications than mentioned above are possible without departing from the inventive concepts herein.

What is claimed is:

1. An electronic device enclosure, comprising:

a front cover assembly placed and secured to provide a front surface for the electronic device enclosure, the front cover assembly including a front cover member and a protective side member, the front cover member having exposed edges, and the protective side member being provided against and around the exposed edges of the front cover member.

2. An electronic device enclosure as recited in claim **1**, wherein the front cover member comprises glass.

3. An electronic device enclosure as recited in claim **1**, wherein the protective side member comprises polyarylamide.

4. An electronic device enclosure as recited in claim **1**, wherein the protective side member comprises is polymer strengthen with glass fibers.

5. An electronic device enclosure as recited in claim **1**, wherein the protective side member comprises a compound including at least polyarylamide and glass fibers.

6. An electronic device enclosure as recited in claim **1**, wherein the protective side member comprises a polymer having a Coefficient of Thermal Expansion (CTE) less than or equal to about 50 millimeters/meter/° C.

7. An electronic device enclosure as recited in claim **1**, wherein the thickness of the protective side member is not more than about 1 mm.

8. An electronic device enclosure as recited in claim **1**, wherein the protective side member comprises a polymer having a Coefficient of Thermal Expansion (CTE) less than or equal to about 35 millimeters/meter/° C.

9. An electronic device enclosure as recited in claim **1**, wherein the front cover assembly further includes a support member and an attachment member, the support member supports the front cover member, and the attachment member is integral with or attached to the support member, the support member be integral with or attached to the protective side member, the attachment member being use to secure the front cover assembly with respect to the electronic device enclosure.

10. An electronic device enclosure as recited in claim **9**, wherein the support member is a metal structure attached to or integrally formed into the protective side member from of a polymer.

11. An electronic device enclosure as recited in claim **1**, wherein the support member is molded into the protective side member.

12. An electronic device enclosure as recited in claim **1**, wherein the thickness of the support member is about 0.2 mm.

13. An electronic device enclosure as recited in claim **1**, wherein the electronic device enclosure further includes a side member extending around a periphery of the electronic device enclosure.

14. An electronic device enclosure as recited in claim **14**, wherein the front cover assembly further includes a support member and an attachment member, the support member supports the front cover member, and the attachment member is integral with or attached to the support member, the support member be integral with or attached to the protective side member, the attachment member being use to secure the front cover assembly with respect to the side member.

15. An electronic device enclosure as recited in claim **14**, wherein the electronic device enclosure further comprises:

a back cover assembly placed and secured to provide a back surface for the electronic device enclosure, the back cover assembly including a back cover member and a back protective side member, the back protective side member being provided against and around the sides of the back cover member, and

wherein the back cover assembly further includes a back support member and a back attachment member, the back support member supports the back cover member, and the back attachment member is integral with or attached to the back support member, the back support member be integral with or attached to the back protective side member, the back attachment member being use to secure the back cover assembly with respect to the side member.

16. An electronic device enclosure as recited in claim **1**, wherein the electronic device enclosure further comprises:

a back cover assembly placed and secured to provide a back surface for the electronic device enclosure, the back cover assembly including a back cover member and a protective side member, the protective side member being provided against and around the sides of the back cover member.

17. An electronic device enclosure as recited in claim **1**, wherein the front cover member comprises glass, and wherein the back cover member comprises glass.

18. An electronic device enclosure, comprising:

a front cover assembly placed and secured to provide a front surface for the electronic device enclosure, the front cover assembly including a front cover member and a front interface member, the front cover member being adhered to the front interface member; and

a back cover assembly placed and secured to provide a back surface for the electronic device enclosure, the back cover assembly including a back cover member and a back interface member, the back cover member being adhered to the back interface member with an adhesive layer.

19. An electronic device enclosure as recited in claim **18**,

wherein the front cover assembly comprises a front protective side member being provided against and around outer edges of the front cover member, and

wherein the back cover assembly comprises a back protective side member being provided against and around outer edges of the back cover member.

20. An electronic device enclosure as recited in claim **18**, wherein the back cover assembly further include a metal sheet provided adjacent the interface member to provide structural support thereto.

21. An electronic device enclosure as recited in claim **18**, wherein the back cover member comprises a glass sheet having a masking layer coating on a back side, and an anti-smudge coating on a front side.

22. An electronic device enclosure as recited in claim **18**, wherein the glass sheet includes an opening, and wherein a second glass piece is provided within the opening in the glass sheet.

23. An electronic device enclosure as recited in claim **18**, wherein the back cover member comprises an optical lens.

24. An electronic device enclosure as recited in claim **23**, wherein the optical lens is formed from an optical adhesive that is molded and cured into a predetermined lens configuration.

25. An electronic device enclosure, comprising:

an outer periphery member defining a side surface for the electronic device enclosure;

an internal structure secured to an inner surface of the outer periphery member, the internal structure offset from front and back planar boundaries of the outer periphery member; and

a front cover assembly placed and secured adjacent the front planar boundary of the outer peripheral boundary, thereby providing a front surface for the electronic device enclosure,

wherein the front cover assembly includes a front cover member and a protective side member, the protective side member being provided against and around the sides of the front cover member.

26. An electronic device enclosed as recited in claim **25**, wherein the front cover member comprises glass.

27. An electronic device enclosed as recited in claim **25**, wherein the protective side member comprises polyarylamide.

28. An electronic device enclosure as recited in claim **25**, wherein the thickness of the protective side member is not more than about 1 mm.

29. An electronic device, comprising:

a housing include at least one a glass surface, the glass surface having a first glass piece with first optical properties, and a second glass piece with second optical properties, the second optical properties being different than the first optical properties.

30. An electronic device as recited in claim **29**, wherein the second glass piece is surrounded by the first glass piece.

* * * * *