US 20120122519A1

(19) United States

(12) Patent Application Publication

Jochheim

(10) Pub. No.: US 2012/0122519 A1

(43) Pub. Date: May 17, 2012

(54) WRIST PHONE WITH IMPROVED VOICE QUALITY

(75) Inventor: Edgar Jochheim, Munich (DE)

(73) Assignee: venyard GmbH

(21) Appl. No.: 12/927,355

(22) Filed: Nov. 12, 2010

Publication Classification

(51) Int. Cl.
H04M 1/00 (2006.01)
B23P 11/00 (2006.01)

(52) U.S. Cl. 455/556.1; 29/428

(57) ABSTRACT

A wrist phone with a single button includes a molded-plastic wristband and a wristband cap. A wireless transceiver module is mounted on a printed circuit board and is contained in a component cavity between the wristband and the wristband cap. A foil antenna is attached directly to the printed circuit board and extends between an outer layer and a wrist-facing layer of a flexible strap portion of the wristband. A microphone is located between the layers of the opposite flexible strap portion of the wristband at least two centimeters away from the wireless transceiver module. The single button is formed using the interleaved fingers of a landing pad on a surface beneath the inner surface of the wristband. The inner surface of the wristband is covered by a layer of conductive material that makes an electrical connection between the interleaved fingers when the outer surface of the wristband is pressed.

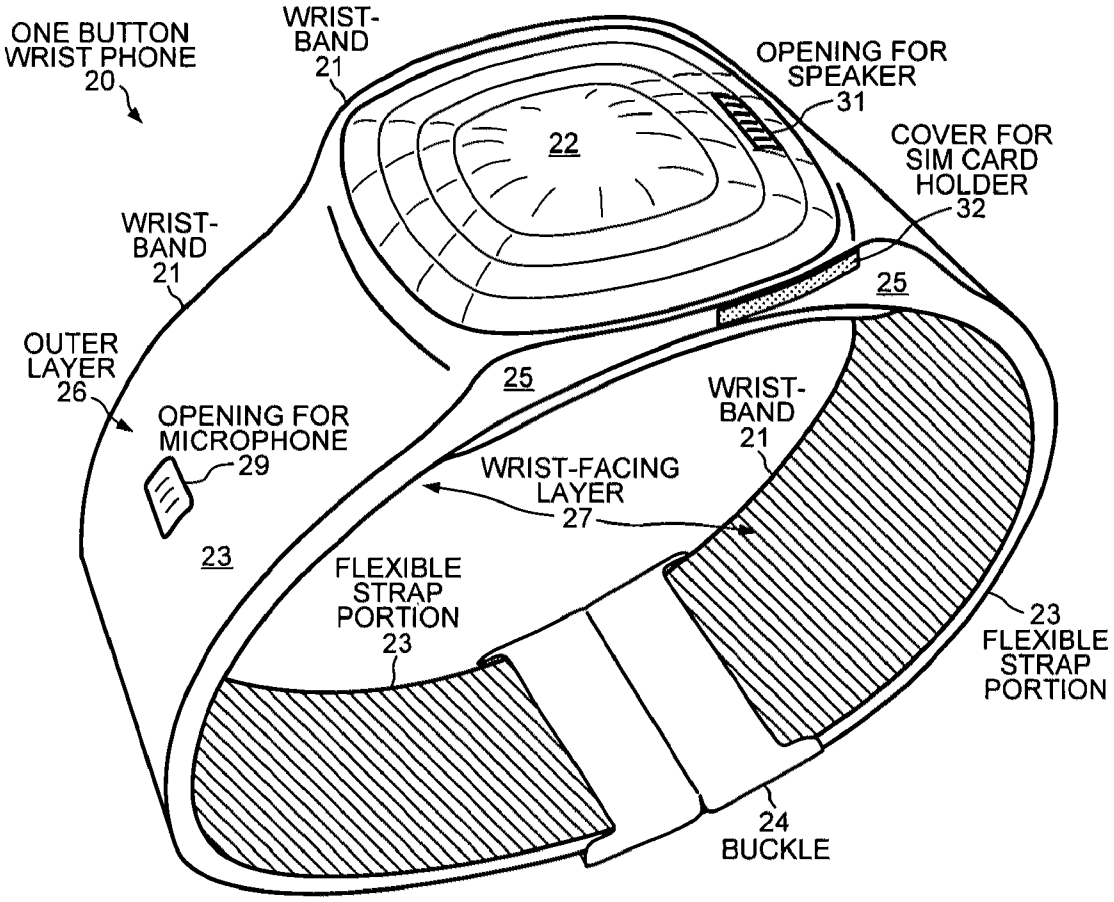

APPLE 1129
Apple v. Masimo
IPR2024-00294

(PRIOR ART)
FIG. 1

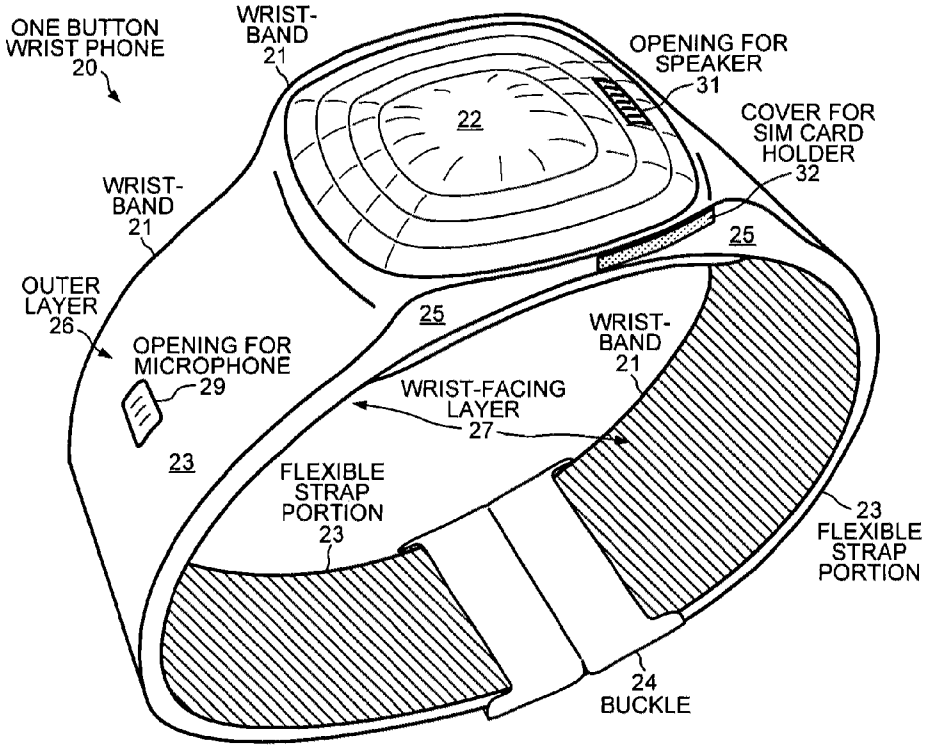
ONE BUTTON WRIST PHONE 20
WRIST-BAND 21
OPENING FOR SPEAKER 31
22
COVER FOR SIM CARD HOLDER 32
WRIST-BAND 21
25
OUTER LAYER 26
25
WRIST-BAND 21
OPENING FOR MICROPHONE 29
WRIST-FACING LAYER 27
23
FLEXIBLE STRAP PORTION 23
23 FLEXIBLE STRAP PORTION
24 BUCKLE

FIG. 2

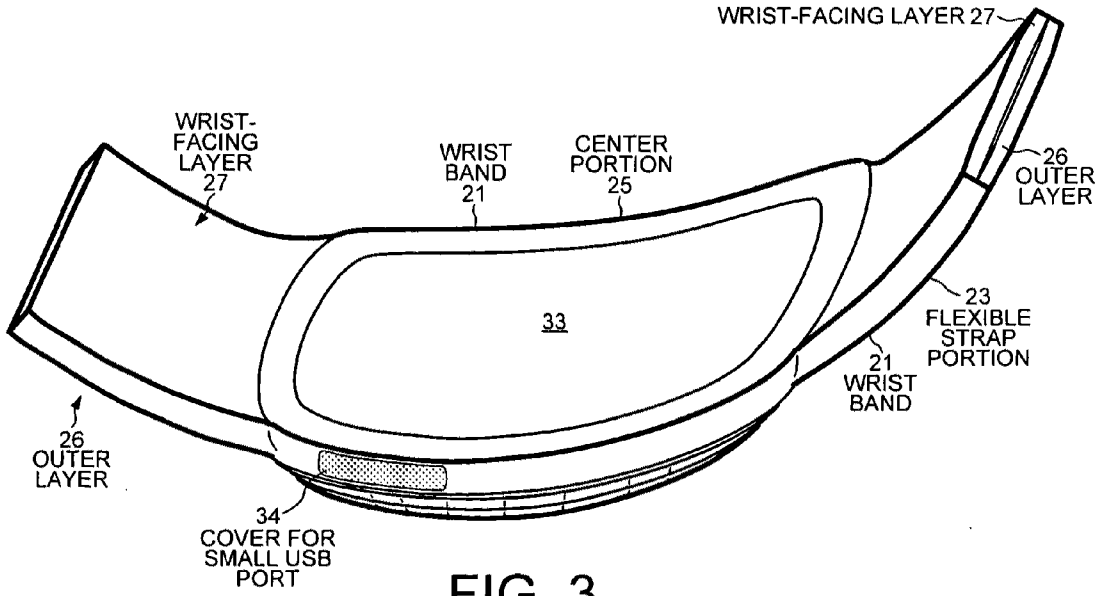
WRIST-FACING LAYER 27
WRIST-FACING LAYER 27
WRIST BAND 21
CENTER PORTION 25
26 OUTER LAYER
33
23 FLEXIBLE STRAP PORTION
21 WRIST BAND
26 OUTER LAYER
34 COVER FOR SMALL USB PORT

FIG. 3

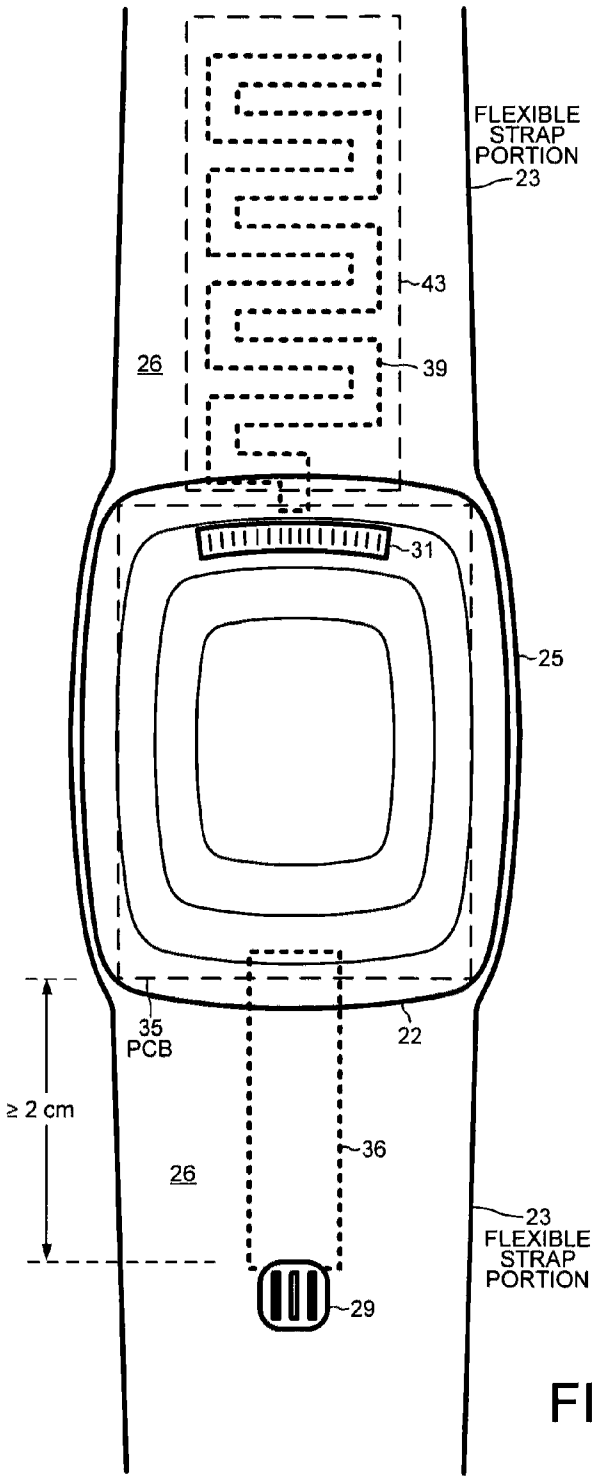
FLEXIBLE
STRAP
PORTION
23
43
26
39
31
25
35
PCB
22
≥ 2 cm
36
26
23
FLEXIBLE
STRAP
PORTION
29

FIG. 4

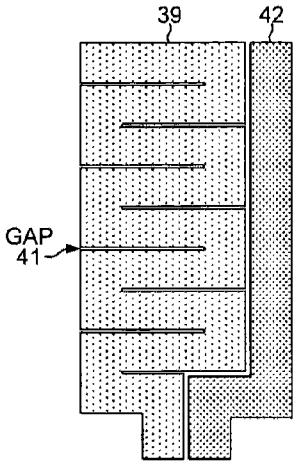
39
42
GAP
41

FIG. 5

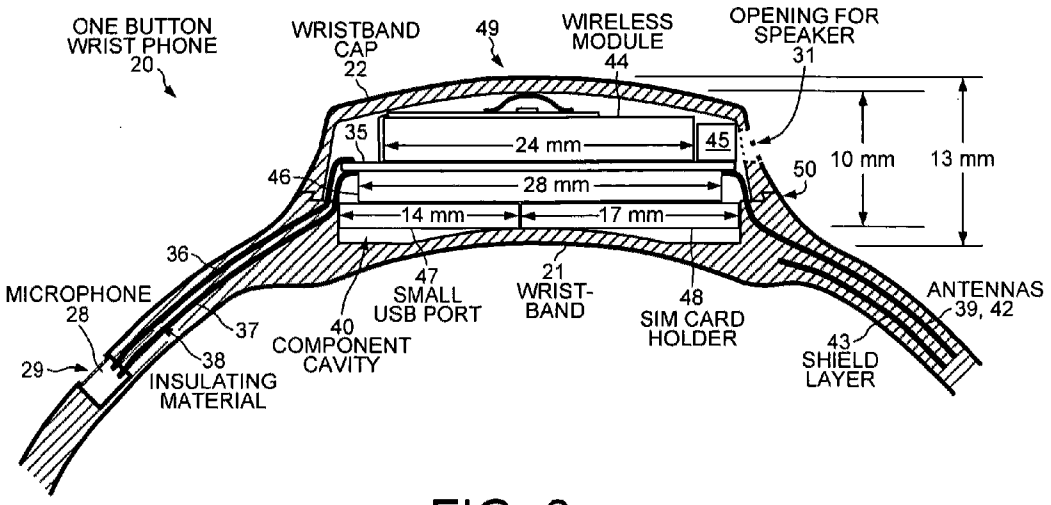
ONE BUTTON WRIST PHONE 20
WRISTBAND CAP 22
49
WIRELESS MODULE 44
OPENING FOR SPEAKER 31
35
24 mm
45
46
28 mm
50
10 mm
13 mm
14 mm
17 mm
36
MICROPHONE 28
37
38 INSULATING MATERIAL
29
40 COMPONENT CAVITY
47 SMALL USB PORT
21 WRIST-BAND
48 SIM CARD HOLDER
43 SHIELD LAYER
ANTENNAS 39, 42

FIG. 6

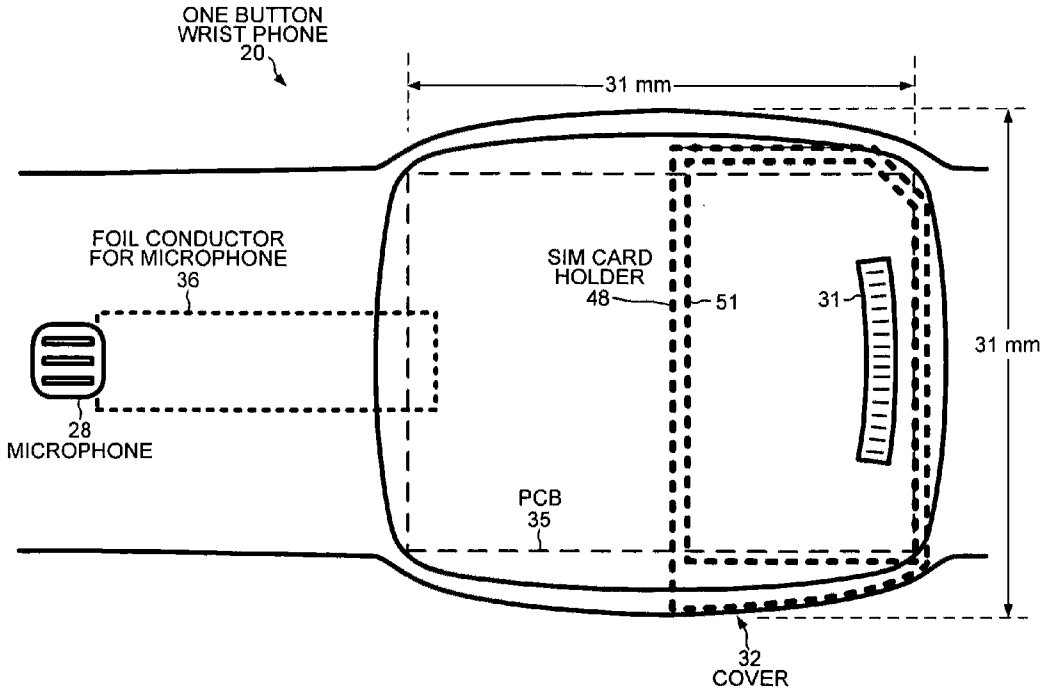
ONE BUTTON WRIST PHONE 20
31 mm
FOIL CONDUCTOR FOR MICROPHONE 36
SIM CARD HOLDER 48
51
31
31 mm
28 MICROPHONE
PCB 35
32 COVER

FIG. 7

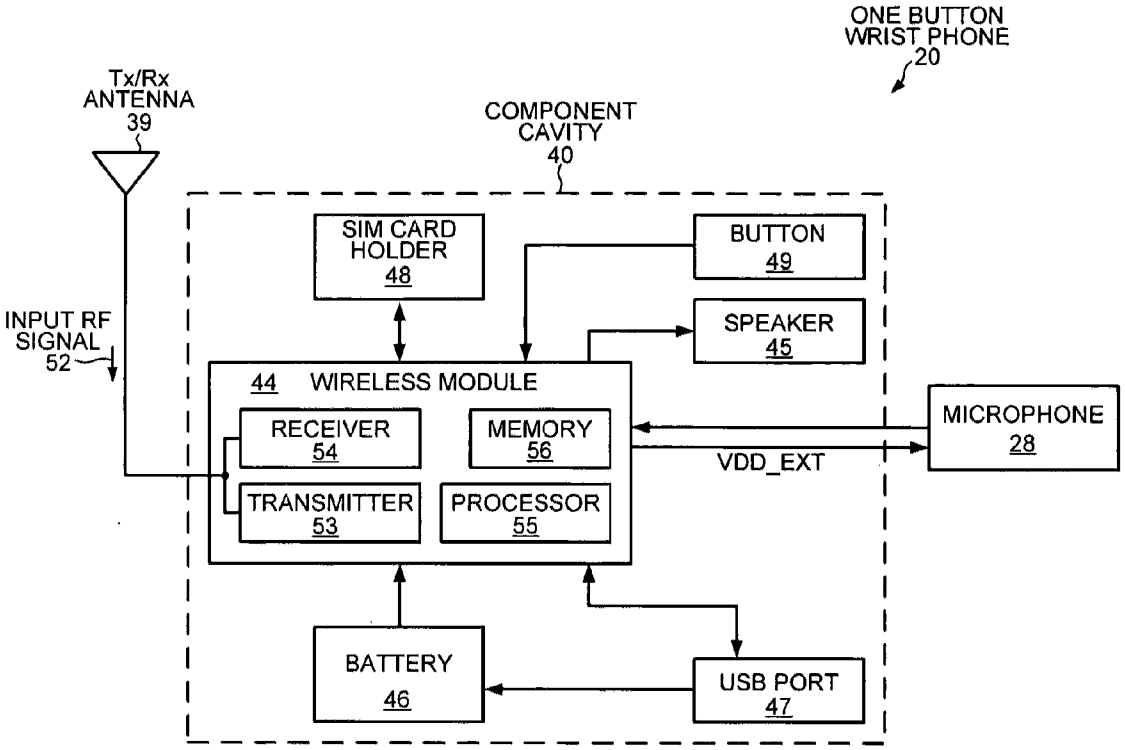
ONE BUTTON
WRIST PHONE
20
Tx/Rx
ANTENNA
39
COMPONENT
CAVITY
40
SIM CARD
HOLDER
48
BUTTON
49
SPEAKER
45
INPUT RF
SIGNAL
52
44 WIRELESS MODULE
RECEIVER
54
MEMORY
56
TRANSMITTER
53
PROCESSOR
55
MICROPHONE
28
VDD_EXT
BATTERY
46
USB PORT
47

FIG. 8

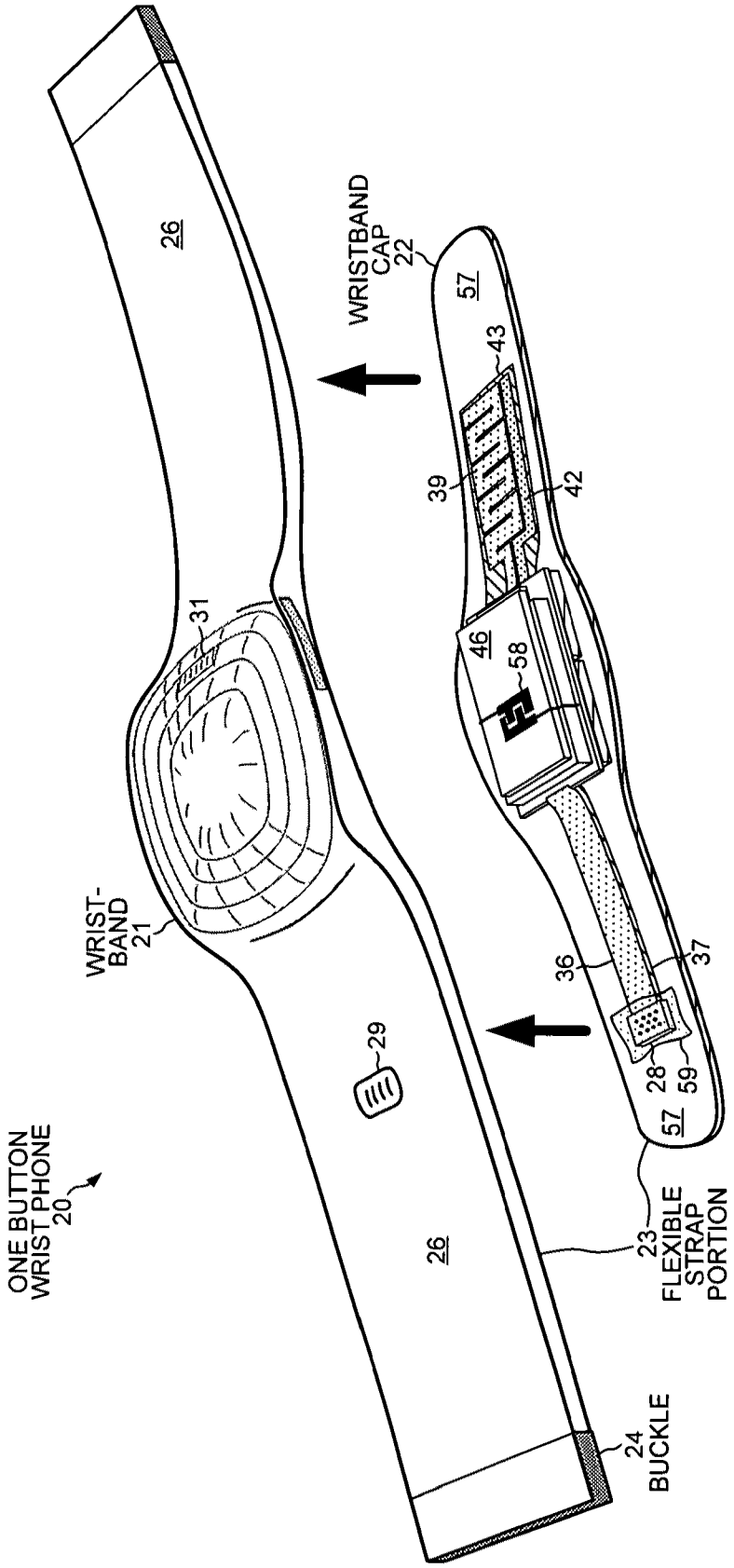
ONE BUTTON
WRIST PHONE
20
26
WRIST-
BAND
21
31
29
26
WRISTBAND
CAP
22
57
43
39
42
46
58
36
37
28
59
57
23
FLEXIBLE
STRAP
PORTION
24
BUCKLE

FIG. 9

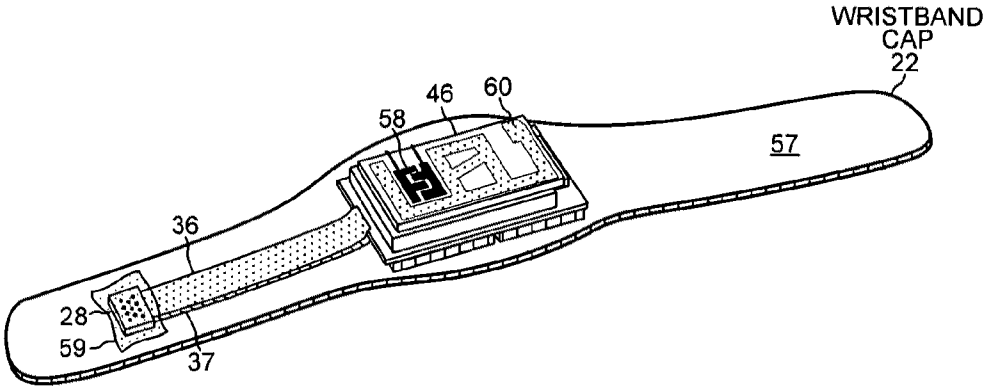
WRISTBAND
CAP
22
46
60
58
57
36
28
59
37

FIG. 10

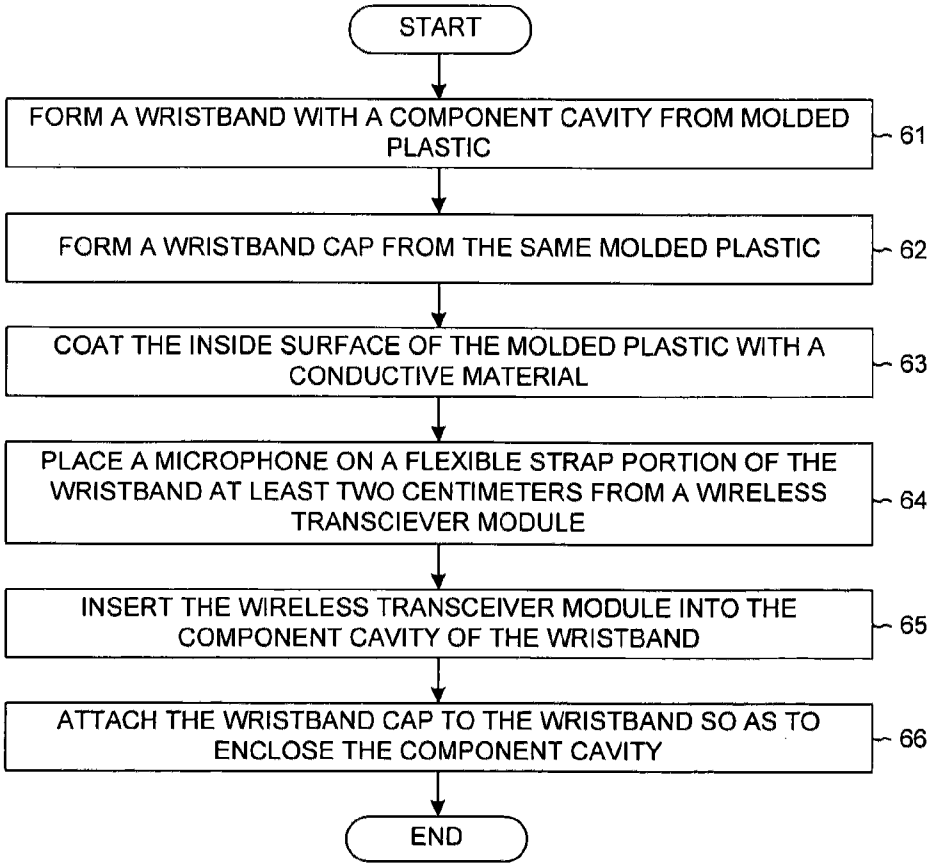
START
FORM A WRISTBAND WITH A COMPONENT CAVITY FROM MOLDED PLASTIC
61
FORM A WRISTBAND CAP FROM THE SAME MOLDED PLASTIC
62
COAT THE INSIDE SURFACE OF THE MOLDED PLASTIC WITH A CONDUCTIVE MATERIAL
63
PLACE A MICROPHONE ON A FLEXIBLE STRAP PORTION OF THE WRISTBAND AT LEAST TWO CENTIMETERS FROM A WIRELESS TRANSCIEVER MODULE
64
INSERT THE WIRELESS TRANSCEIVER MODULE INTO THE COMPONENT CAVITY OF THE WRISTBAND
65
ATTACH THE WRISTBAND CAP TO THE WRISTBAND SO AS TO ENCLOSE THE COMPONENT CAVITY
66
END

FIG. 11

WRIST PHONE WITH IMPROVED VOICE QUALITY

TECHNICAL FIELD

[0001] The present invention relates to portable communication devices, and in particular to a one-button wrist phone without a display that has superior voice quality.

BACKGROUND INFORMATION

[0002] A portable communication device such as a cell phone communicates voice signals over a radio frequency channel via an antenna. The portable communication device incorporates a microphone and a speaker that are used for the voice communication. The portable communication device typically has a housing that includes the microphone and speaker, a display, a key pad, an antenna, and various analog, digital and radio frequency (RF) circuitry that facilitate the reception and transmission of the voice signals over an RF channel. The microphone converts the voice signal into a corresponding electrical signal that is processed by the device circuitry and then modulated for generating a communication signal for transmission via the antenna. The antenna also receives a voice modulated signal that is demodulated in the receiver to produce a voice signal that is applied to the speaker to make the voice signal audible.

[0003] The speaker and the microphone are typically disposed in the same housing on opposite ends of the portable communication device. For example, a cell phone is typically held with the speaker being near the user's ear while the user speaks into the microphone. With the miniaturization of electronics, it has now become possible to fit the components of a portable communication device onto a wristband to make a wrist phone. While a wrist phone is more convenient because it is smaller and weighs less, the smaller size can also in some ways be less convenient.

[0004] FIG. **1** (prior art) shows a wrist phone **10** attached to a wrist band **11** in which the keypad is implemented on a touch-screen display **12**. The space saved by eliminating a physical keypad can be used to enlarge the display **12**. Despite the larger virtual keypad, however, the numbers on the keypad are so small that the tip of the user's index finger is larger than a single key. The keys are best pressed using a stylus or the tip of a pen. It is inconvenient for the user to carry the stylus or a pen just to use the touch-screen display **12**. In addition, the display is still so small that elderly people have difficulty reading the displayed characters. Moreover, the speaker of the wrist phone cannot be held near the user's ear while the user speaks into the microphone because the length of the wrist phone is typically much shorter than the distance from the user's ear to the user's mouth. Thus, a loudspeaker function is used so that the user can speak into the wrist phone as though the user were reading the time from a wrist watch. The speech quality generated by such a wrist phone is understandably poor as the voice signal output from the loudspeaker enters the microphone disposed in the same small housing. The person talking to the user of the wrist phone hears an echo of that person's own voice.

[0005] A method is sought for making a wrist phone that has superior voice quality and for which the user does not have difficulty seeing the display or pressing individual keys of a keypad.

SUMMARY

[0006] A one-button wrist phone includes a wristband, a wristband cap, a wireless transceiver module, an antenna and a microphone. The wristband and the wristband cap are made of molded plastic. The wireless transceiver module is mounted on a printed circuit board and is contained in a component cavity between the wristband and the wristband cap. The antenna is a flat metallic foil with a meander form that is attached directly to the printed circuit board. The antenna extends out through a flexible strap portion of the wristband between an outer layer and a wrist-facing layer of the strap. A microphone is located between the layers of the opposite flexible strap portion of the wristband at least two centimeters away from the wireless transceiver module. A loudspeaker is located in the component cavity opposite the flexible strap portion that contains the microphone. The location of the microphone limits the amount of sound coming from the loudspeaker that is picked up by the microphone and thereby avoids creating an echo.

[0007] In one embodiment, the single button is formed using interleaved fingers of a landing pad on the surface of the battery beneath the inner surface of the wristband. The inner surface of the wristband is covered by a layer of conductive material that makes an electrical connection between the interleaved fingers when the outer surface of the wristband is pressed. In another embodiment, the one-button phone uses a click-type button made of a bent piece of metal. In yet another embodiment, the one-button phone uses a five-push input cursor in which landing pads are traced onto the top surface of the battery or the module at the four compass directions and in the middle.

[0008] Instead of using an antenna with a meander form inside the flexible strap portions of the wristband, a patch antenna can be placed under the button. The landing pads for the button fit in the open sections of the patch form of the antenna. The reception of the patch antenna is not degraded by the layer of molded plastic that forms the button.

[0009] A method of manufacturing a one-button wrist phone includes the steps of forming the wristband and the wristband cap from molded plastic. An inner surface of the wristband or wristband cap beneath the button is then coated with a layer of conductive material. A foil antenna is placed between the outer layer and the wrist-facing layer of one flexible strap portion of the wristband. A microphone is placed in the other flexible strap portion of the wristband at least two centimeters away from the wireless transceiver module. The antenna and the microphone are attached to the printed circuit board. The printed circuit board, together with the wireless transceiver module and the other electronic components, is then inserted into the component cavity. The wristband cap is attached to the wristband so as to enclose the component cavity. The openings for the microphone and loudspeaker are covered with a water-impermeable membrane so as to render the one-button wrist phone water resistant.

[0010] Further details and embodiments are described in the detailed description below. This summary does not purport to define the invention. The invention is defined by the claims.

BRIEF DESCRIPTION OF THE DRAWINGS

[0011] The accompanying drawings, where like numerals indicate like components, illustrate embodiments of the invention.

[0012] FIG. **1** (prior art) is a perspective view of a wrist phone with a small virtual keypad on a touch screen.

[0013] FIG. **2** is a perspective view of a one-button wrist phone with a microphone in the wristband.

[0014] FIG. **3** is a perspective view of a portion of the wrist phone of FIG. **2** showing the wrist-facing surface of the center portion.

[0015] FIG. **4** is a top-down view showing a foil antenna in a flexible strap portion of the wrist phone of FIG. **2**.

[0016] FIG. **5** shows a meander pattern of a flat antenna that fits between the layers of the flexible strap portion of the wrist phone of FIG. **2**.

[0017] FIG. **6** is a cut-away side view of the wrist phone showing various electronic components contained in a component cavity between the wristband and the wristband cap.

[0018] FIG. **7** is a top-down schematic diagram of the wrist phone showing the outline of a SIM card holder in relation to a printed circuit board in the component cavity.

[0019] FIG. **8** is a schematic diagram of the electronic components of the wrist phone of FIG. **2**.

[0020] FIG. **9** is a perspective view of another embodiment of a one-button wrist phone in which the wristband cap attaches underneath the wristband.

[0021] FIG. **10** shows the wristband cap of the wrist phone of FIG. **9** in which a patch antenna is attached to the upper surface of the battery so as to fit under the molded plastic button of the wristband.

[0022] FIG. **11** is a flowchart of steps of a method of making the one-button wrist phones of FIGS. **2** and **9**.

DETAILED DESCRIPTION

[0023] FIG. **2** is a perspective view of a one-button wrist phone **20** with improved voice quality. Wrist phone **20** has a wristband **21** made of molded plastic and a wristband cap **22**. Wristband **21** has two flexible, strap portions **23** that bend around a user's wrist and attach to each other at a buckle **24**. Flexible strap portions **23** are more flexible than the center portion **25** of wristband **21** because flexible strap portions **23** are thinner. Each flexible strap portion **23** has an outer layer **26** and a wrist-facing layer **27**. A microphone **28** is disposed between outer layer **26** and wrist-facing layer **27**. Microphone **28** is disposed on flexible strap portion **23** at a location that is in line with the user's thumb when wrist phone **20** is worn. For a wrist phone sized for an average adult user, microphone **28** is located on flexible strap portion **23** at least two centimeters away from wristband cap **22**. FIG. **2** shows an opening **29** in outer layer **26** above microphone **28** that permits the user's voice to be picked up by the microphone. In one embodiment, opening **29** is covered by a water-impermeable membrane such as Gore-Tex® fabric.

[0024] Center portion **25** of wristband **21** has a component cavity **40** (see FIG. **5**) that contains the various components of wrist phone **20**. For example, a wireless transceiver module is contained in component cavity **40** between wristband **21** and wristband cap **22**. In one embodiment, wristband cap **22** is made of the same material as wristband **21**. Wristband cap **22** snaps into wristband **21** so as to enclose component cavity **40**. In one embodiment, a loudspeaker **30** is contained in component cavity **40**. The sound from loudspeaker **30** exits component cavity **40** through an opening **31** in wristband cap **22**. Opening **31** is located on the opposite side of wristband cap **22** from the flexible strap portion **23** that contains the microphone. Opening **31** is far enough away and is oriented in such a manner that the sounds emanating from opening **31** are not picked up by the microphone. Opening **31** is also covered by a membrane that is impermeable to water. FIG. **2** also shows a cover **32** for a SIM card holder contained in component cavity **40**.

[0025] FIG. **3** is a perspective view of a portion of wrist phone **20** showing wrist-facing layer **27** and a wrist-facing surface **33** of center portion **25**. FIG. **3** shows a cover **34** for a small USB port located on the opposite rim of center portion **25** from cover **32** for the SIM card holder.

[0026] FIG. **4** is a top-down view of a portion of wrist phone **20** in which the two flexible strap portions **23** are unclasped and extended. The strap portions taper so that they are somewhat narrower at the buckle ends (not shown in FIG. **4**). The location of a printed circuit board (PCB) **35** in component cavity **40** beneath the wristband cap **22** is indicated in FIG. **4** by a dashed line. The wireless transceiver module and the other components of wrist phone **20** are attached to PCB **35**. Microphone **28** is electrically coupled to the wireless transceiver module via foil conductors. FIG. **4** shows a dotted outline of an upper foil conductor **36** directly beneath outer layer **26**. Both upper foil conductor **36** and a lower foil conductor **37** are disposed between outer layer **26** and wrist-facing layer **27**.

[0027] In one embodiment, wristband **21** is a single piece of molded plastic in which flat channels extend from component cavity **40** into the strap portions **23** between outer layer **26** and wrist-facing layer **27**. Wristband **21** is molded from thermoplastic elastomer (TPE) plastic. Before PCB **35** and the components are added to component cavity **40**, upper and lower foil conductors **36-37** are inserted into the flat channel of one of the strap portions **23**. The foil conductors **36-37** are separated by an insulating material **38** before being inserted into the strap portion **23**. The ends of conductor **36-37** are then attached to the leads of microphone **28** and to pads on PCB **35**. In FIG. **4**, microphone **28** lies beneath opening **29**, and the wireless transceiver module is disposed within the lateral boundaries of PCB **35**. Thus, FIG. **4** shows that microphone **28** is located on flexible strap portion **23** at least two centimeters away from the wireless transceiver module.

[0028] FIG. **4** also shows a foil antenna **39** that is integrated into wristband **21**. Foil antenna **39** is disposed between outer layer **26** and wrist-facing layer **27**. Foil antenna **39** is made of a conductive sheet, such as copper foil. By placing the antenna in strap portion **23**, antenna **39** can be made as long as one quarter of the operating wavelength of a wireless transceiver module operating at the frequencies of most cellular telephone standards. For example, a wireless transceiver module that operates at the GSM-850 band of the GSM standard in North America receives and transmits signals at 824-849 MHz. One quarter of the wavelength of a signal at 824 MHz is about 9.1 cm, which is much longer than the longest dimension of any housing that would fit on a wristband of an average adult. Superior reception can be achieved, however, by maintaining a ¼-lamda (monopole) antenna length and not being forced to accept an antenna that receives an even smaller portion of the signal wavelength. But even strap portion **23** is too short to accommodate a linear antenna that is 9.1 cm long. Fortunately, most of the other frequency bands used by cellular telephone operators in North America are at higher frequencies than 824 MHz, and therefore a ¼-lamda antenna length for those frequency bands is shorter than 9.1 cm.

[0029] In order to fit a 9.1-cm long antenna into strap portion **23**, the antenna is given a slight meander or serpentine pattern. In FIG. **4**, the center line of the flat serpentine band of antenna **39** is about 9.1 cm long. Because of the serpentine

pattern, the length of the overall rectangular outline of the serpentine pattern is about half of the length of the center line. In operation, the flat foil band of antenna **39** wraps around the user's arm within flexible strap portion **23**. The meander pattern of the flat foil provides a larger surface for receiving RF signals than does a wire antenna whose length is the same as the length of the center line of the flat meander pattern. Signals received on the larger surface of antenna **39** require less amplification, which extends battery life. The metal foil antenna provides better reception than does a wire antenna with the same mass of metal. In addition, a wire antenna in strap portion **23** is more likely to break due to metal fatigue as the wire bends with each wearing. The foil antenna is thinner in the bending dimension around the wrist and is less likely to break with wearing as the user repeatedly straps on wristband **21**.

[0030] In one embodiment, antenna **39** is a metal foil, such as aluminum or copper. The copper or aluminum foil can also be coated with tin, lead, nickel, silver or gold. In another embodiment, antenna **39** is a thin metal sheet laminated to a flexible dielectric, such as a polyamide (Kapton) or a polyester (Mylar). For example, copper foil with a thickness of 0.0012 inches is laminated to a flexible mylar sheet having a thickness of 0.004 inches. In yet another embodiment, the pattern of the antenna is printed or silk screened onto a mylar flex backing. The metal foil or mylar sheet is inserted using a blade-shaped instrument into the flat channel between outer layer **26** and wrist-facing layer **27** of one of the strap portions **23**.

[0031] In yet another embodiment, wristband **21** is made as two separate pieces of molded plastic that are later joined by ultrasonic welding after antenna **39** and conductors **36-37** have been "hot stamped" onto the inside surfaces of outer layer **26** and wrist-facing layer **27**. A metal foil is pressed with a die having the meander form of antenna **39** to the inside surface of outer layer **26**. The die is heated during the pressing of the planar antenna so that the plastic at the inside surface of outer layer **26** melts beneath the antenna and anneals the antenna to outer layer **26**. After curing, the foil that extends beyond the antenna zone is removed in a cutting step. The thin foil that is not annealed to the plastic is brittle and can be removed from the area outside the antenna zone with little mechanical effort. By using hot stamping, the thickness of the copper foil can be reduced to about 0.006 inches.

[0032] Antenna **39** attaches directly to PCB **35**, and there are no connectors or conductors between antenna **39** and PCB **35**. A double foil layer or a thicker foil layer is used at the end of antenna **39** that attaches to a strip pad on one side of PCB **35**. The thicker portion of antenna **39** must span the small gap between the surface of outer layer **26** and the edge of PCB **35**. The plastic of wristband **21** becomes thicker at center portion **25** and prevents the foil of antenna **39** from bending at the location where the thicker foil spans the gap from PCB **35** to where the foil is annealed to the plastic of outer layer **26**. The impedance along antenna **39** can remain relatively constant because there is a single piece of plastic beneath the entire surface area of antenna **39**. In addition, the planar form of antenna **39** adds capacitance to the antenna and reduces the amount of impedance matching required to match the impedance of the antenna to the impedance of the antenna conductors along PCB **35** and within wireless module **44**. Because of the single piece of plastic, signals traveling from the antenna to wireless module **44** need not traverse the rotating hinge shaft at the junction between a conventional arm band and the central casing that would typically contain a watch.

[0033] FIG. **5** shows the meander pattern of antenna **39** that has been annealed to outer layer **26** in a hot-stamping process. The foil in the narrow gap **41** between adjacent portions of the meandering path of antenna **39** is brittle after hot stamping and is easily removed by rubbing. The more compact form of the meander pattern of FIG. **5** wastes less of the foil that must be removed from areas outside the antenna zone. In addition, the longest dimension of the meander pattern in FIG. **5** is shorter than the longest dimension of the meander pattern in FIG. **4**. FIG. **5** also shows a second antenna **42** whose center length is shorter than the length of the center line of antenna **39**. Second antenna **42** is used to transmit and receive signals at higher frequencies than those of the GSM-850 frequency band, for example at the frequency bands around 1900 MHz. Thus, the two antennas **39** and **42** permit dual-band operation of wrist phone **20**. Both antenna **39** and second antenna **42** are made in the same hot-stamping process steps.

[0034] Hot stamping can also be used to attach conductor **36** to the inside surface of outer layer **26**, and conductor **37** to the inside surface of wrist-facing layer **27**. A shield layer **43** is hot stamped to the inside surface of wrist-facing layer **27** opposite antenna **39**. Insulating material **38** is then placed over conductor **37** and shield layer **43** before outer layer **26** is joined by ultrasonic welding to wrist-facing layer **27** of wristband **21**.

[0035] Adding shield layer **43** between antenna **39** and the user's arm reduces the exposure of the user of wrist phone **20** to radio frequency (RF) energy emitted by antenna **39**. The Federal Communications Commission (FCC) limit for public exposure from mobile phones is a specific absorption rate (SAR) level of 1.6 watts per kilogram of the body's tissue exposed to the RF energy. The SAR level is usually measured over a volume containing a mass of one gram of tissue. Because wrist phone **20** is a speaker phone and is not held touching the user's ear, the SAR level for the user's head is low. However, antenna **39** is strapped to the user's wrist and would expose the user's wrist to a high SAR level if shield layer **43** were not placed between antenna **39** and the user's wrist. FIG. **4** shows that the outline of shield layer **43** is larger than the dimensions of the meander pattern of antenna **39** so that the RF signal emitted from antenna **39** is blocked from penetrating the user's wrist.

[0036] FIG. **6** is a cut-away side view of one-button wrist phone **20**. FIG. **6** shows the various components of wrist phone **20** contained in component cavity **40** between wristband **21** and wristband cap **22**. A wireless transceiver module **44** is mounted to the top side of PCB **35**. In one embodiment, module **44** is a SIM900 module manufactured by Shanghai SIMCom Wireless Solutions Ltd. The SIM900 module is 24 mm by 24 mm by 3 mm and is mounted in a flip-chip manner to PCB **35**. The SIM900 module is a quad-band module and can operate in the 840, 900, 1800 and 1900 MHz bands. One end of antenna **39** is attached to a strip pad on PCB **35**. Antenna **39** is then coupled through a trace on PCB **35** to a pin on the SIM900 module that acts as the RF antenna pad. The impedance of the antenna trace is controlled to fifty Ohms. The layout of the components in component cavity **40** reduces the distance that antenna **39** travels from PCB **35** to the plastic of strap portion **23**. The vast majority of antenna **39** is enveloped in the plastic of strap portion **23**. Antenna **39** is easier to tune than if it traveled through multiple types of materials with different dielectric constants.

[0037] One end of upper foil conductor **36** is attached to a strip pad on the upper surface of PCB **35**, while an end of lower foil conductor **37** is attached to another strip pad on the bottom surface of PCB **35**. The other ends of conductors **36-37** are connected to microphone **28**. The loudspeaker **45** sits on PCB **35** next to module **44**. Loudspeaker **45** is directly opposite opening **31** in wristband cap **22**. A 3.7-volt lithium-ion cell battery **46** is attached to PCB **35** on the side opposite wireless transceiver module **44**. A small USB port **47** and a subscription identification module (SIM) card holder **48** are disposed in component cavity **40** below battery **46**.

[0038] A single button **49** is formed on top of module **44**. FIG. **6** shows a click-type button made of a bent piece of metal. The metal makes electrical contact with a landing pad underneath where the top of wristband cap **22** is pressed. Another embodiment of button **49**, however, does not include a bent piece of metal. Button **49** is made of the same molded plastic as is wristband **21**. The inside surface of wristband cap **22** is covered by a conductive coating. An interleaved-finger landing pad is made with silver traces on the top of module **44**. For example, the landing pad can be formed using silk screening. When the wristband cap **22** is depressed, the conductive coating on the inside surface of wristband cap **22** makes an electrical connection between the fingers of both sides of the landing pad. Thus, the entire upper surface of module **44** serves as a touch zone to activate single button **49**, and the single button is part of wristband cap **22**.

[0039] After the components are placed in component cavity **40** and the antenna and conductors are attached to PCB **35**, wristband cap **22** is snapped down into wristband **21**. Wristband cap **22** has a lip with a slightly larger diameter than the diameter of the ridge **50** of wristband **21** into which wristband cap **22** is pressed. All of the components inside component cavity **40** are electrically isolated from electromagnetic fields (EMF). Except for the small opening **31** for the speaker, which is covered by a water-impermeable fabric, the entire cavity **40** is surrounded by TPE plastic, which is an insulator. Because the electronic components are completely isolated, damage from electrostatic discharge (ESD) is much less likely.

[0040] FIG. **7** is a top-down schematic diagram of one-button wrist phone **20** showing the outline of SIM card holder **48** in relation to PCB **35**. A SIM card **51** fits into a tray that slides into center portion **25** of wristband **21**. One side of the tray forms cover **32** of SIM card holder **48**. In one implementation, SIM card **51** is a prepaid GSM phone card that can log wrist phone **20** into a GSM network. SIM card **51** can be used in another cell phone and then transferred into wrist phone **20** for those occasions when wearing wrist phone **20** is more convenient than carrying a cell phone. For example, while jogging or working at a construction site, simply being reachable might be more important than playing with the latest downloaded cell-phone application. Wrist phone **20** rings when the number linked to SIM card **51** is dialed. And by pressing single button **49** for an extended period, the first number listed in the directory of numbers on SIM card **51** is dialed. A number can be entered as the first number using another cell phone and linking the number to the name "000".

[0041] Elderly and disabled people often have only one regular social contact for help requests. The user of wrist phone **20** can easily reach the contact person simply by pressing single button **49**. Conversely, the contact person, such as a son or daughter or medical professional, can easily reach an elderly or immobile person who is wearing wrist phone **20**. There is no need to get up to answer the phone or to find one's cell phone. Thus, wrist phone **20** is also attractive for parents who want to provide their children with the ability to be permanently in contact. Wrist phone **20** also allows the user to contact a service center or secretary at the single touch of a button. Telephone numbers other than the first listed number on the SIM card can be dialed by pressing single button **49** the number of times corresponding to the digit being dialed. An acoustic confirmation of the digit dialed is returned from loudspeaker **45** after any pause in the presses of the button. The acoustic confirmation can be a number of beeps or a spoken number.

[0042] In another embodiment, single button **49** is used as a five-push input cursor, i.e., the four sides of the button and the middle of the button can be pushed independently of each other for five input alternatives. Landing pads are traced onto the top of module **44** at the four compass directions and in the middle. The power of wrist phone **20** is turned on when the middle pad is pressed for a longer period of time. The power is turned off by pressing the bottom side for an extended period. An incoming call is answered when the middle pad is pressed for a short period. The call is terminated by a long press of the top pad during the call. The first number listed in the SIM card directory is dialed by pressing the middle pad for an extended period when the phone in on. Wrist phone **20** is placed in dialing mode for other numbers when the left side is pressed for an extended period.

[0043] Telephone number input to the five-push cursor requires fewer presses than does the one-push single button. For example, if the top side is pushed one time, the digit one is input. If the top side is pressed twice with only a short pause between the presses, the digit two is input. If the top side is pressed three times, the digit three is input. If the right side is pressed one time, the digit four is the input. If the right side is pressed two times with only a short time between the pushing operations, the digit five is input. If the right side is pressed three times, the digit six is input. In a similar manner, digits 7-9 are entered by pressing the bottom side. The digit zero is input by a short press of the left side.

[0044] FIG. **8** is a schematic diagram of the components of wrist phone **20**. Antenna **39** transmits and receives radio frequency signals to wireless module **44**. For example, an input RF signal **52** can be a voice signal or a network management signal. Antenna **39** is coupled to wireless module **44** through the antenna pad. Six-pin SIM card holder **48** receives radio network access information acquired from incoming network signals. By entering a predetermined press sequence on button **49**, such as an extended single press of the left side of a five-push cursor when the phone is already in dialing mode, the user of wrist phone can send a message (such as *100#) to obtain the remaining balance of the pre-paid SIM card. The remaining balance is output from speaker **45** as a recorded voice message. Control circuitry within wireless module **44** is coupled to a transmitter **53** and to a receiver **54** for controlling the incoming and outgoing radio frequency signals, the signals coming from microphone **28**, and the signals coming from button **49**. Button **49** is coupled to wireless module **44** through the GPIO pin normally used as a keypad interface. Microphone **28** is coupled to wireless module **44** through the analog input channel. In addition, microphone **28** is powered by the output power supply from wireless module **44** labeled VDD_EXT. Wireless module **44** couples the RF signals, microphone signals and button signals to a processor **55** that performs signal processing opera-

tions on the signals. The control circuitry amplifies voice and tone signals that are sent to loud speaker **45**. Loud speaker **45** is coupled to wireless module **44** through the analog audio interface.

[0045] One or more exemplary embodiments are implemented in software stored as instructions or code on a computer-readable medium. A memory **56** of wireless transceiver module **44** is an example of such a computer-readable medium. Memory **56** stores the instructions that are executed on processor **55** and that operate one button wrist phone **20**. Processor **55** can read information from and write information to the storage medium of memory **56**. By way of example, and not limitation, such computer-readable medium can comprise RAM, ROM, EEPROM or any other medium that can be used to carry or store desired program code in the form of instructions or data structures and that can be accessed by processor **55** or by an external computer through USB port **47**. The mini-USB port **47** is also used to connect battery **46** to a charger or power converter. Battery **46** is coupled to wireless module **44** through the power supply interface VBAT. The user of wrist phone **20** receives an acoustic notification of a low battery condition from loudspeaker **45**. USB port **47** is also used to control wrist phone **20** via an external personal computer. For example, the number that will be dialed when button **49** is pressed for an extended period can be programmed using a PC as well as by setting the first number listed in the directory of SIM card **51**. USB port **47** can also be used for connecting an ear piece that outputs the voice and tone signals that would otherwise be sent to loud speaker **45**.

[0046] FIG. **9** shows another embodiment of one-button wrist phone **20**. In this embodiment, flexible strap portions **23** are made up of outer layer **26** on wristband **21** and a wrist-facing layer **57** on wristband cap **22**. Wristband cap **22** attaches to the wrist-facing side of wristband **21** instead of to the outer face as in the embodiment of FIG. **2**. Wireless module **44** and the other components mounted on PCB **35** in component cavity **40** rest on a wider center portion of wristband cap **22**. Conductors **36-37** are attached to the upper and lower sides of PCB **35** and electrically couple microphone **28** to wireless module **44**. Lower conductor **37** is glued to the plastic of wrist-facing layer **57**. A dielectric layer **38** insulates lower conductor **37** from upper conductor **36**. Shield layer **43** is also glued to the plastic of wrist-facing layer **57**. Antennas **39** and **42** are attached to PCB **35** and rest on a dielectric layer **38** that insulated them from shield layer **43**. FIG. **9** shows an interleaved finger landing pad **58** made by silk screening a conductive pattern on the top surface of battery **46**. When the center portion of wristband **21** is depressed, the conductive coating on the inside surface of the center portion of wristband **21** makes an electrical connection between the fingers of both sides of landing pad **58**.

[0047] A piece of water-impermeable fabric **59** is placed over microphone **28** and later covers the inside of opening **29** when wristband cap **22** is attached to the bottom surface of wristband **21**. A second piece of water-impermeable fabric covers the inside of opening **31** to speaker **35**. The edges of wristband cap **22** are attached to the bottom surface of wristband **21** using ultrasonic welding. Wrist phone **20** is water resistant and can, for example, be worn in the shower. Wrist phone **20** is appropriate for elderly people who want to be reachable at all times for safety reasons, for example if they fall in the shower. The first number of the SIM card directory that is dialed by pressing the center portion of wristband **21** can be set to an emergency telephone number, such as 911 or the number of a caregiver. Where the SIM card **51** used in wrist phone **20** is a pre-paid card, there is no recurring cost to the elderly person for maintaining the ability to call an emergency number at all times and at all times being reachable. Because wrist phone **20** is worn on the wrist and is not buried in the user's pocket, the elderly person is much more likely to hear the ring of an incoming call. Optionally, wrist phone **20** can be equipped with a vibration function to alert the user to an incoming call. The vibration on a person's wrist is more likely to be noticed than a vibrating cell phone in a person's pocket or purse.

[0048] FIG. **10** shows a variation of the embodiment of FIG. **9** in which flexible strap portions **23** are made up of outer layer **26** on wristband **21** and wrist-facing layer **57** on wristband cap **22**. No foil antenna is attached to wrist-facing layer **57** of wristband cap **22** of FIG. **10**. Instead of an antenna with a meander form along the inside surface of wrist-facing layer **57**, a patch antenna **60** is stamped on top of battery **46**. Patch antenna **60** can achieve good reception even though its longest dimension is shorter than a quarter wavelength of the signals that that the antenna receives. Landing pad **58** for button **49** fits in an open section of the patch form of antenna **60**. Because wrist phone **20** has no display or keypad on its face, there is no conductive layer above antenna **60** that would interfere with the signal reception. The antenna of a conventional wrist phone, such as wrist phone **10** of FIG. **1**, cannot be placed beneath the display **12** or under the metal casing. The reception of antenna **60** is not degraded by the molded plastic of wristband **21**. Radio frequency (RF) energy emitted by antenna **60** is shielded from the user's wrist by battery **46** and module **44**.

[0049] FIG. **11** is a flowchart illustrating steps **61-66** of a method of making one-button wrist phone **20**. In a first step **61**, wristband **21** with component cavity **40** is formed from molded plastic. In step **62**, wristband cap **22** is formed from the same type of molded plastic as is wristband **21**. In step **63**, the inside surface of the molded plastic is coated with a layer of conductive material. In the embodiment of FIG. **2**, the inner surface of wristband cap **22** is coated with the conductive material. In the embodiment of FIG. **9**, the inside surface of the center portion of wristband **21** is coated with the conductive material.

[0050] In step **64**, microphone **28** is placed on flexible strap portion **23** of wristband **21** at least two centimeters away from wireless transceiver module **44**. In the embodiment of FIG. **2**, microphone **28** is placed between outer layer **26** and wrist-facing layer **27** of wristband **21**. In the embodiment of FIG. **9**, microphone **28** is disposed between outer layer **26** of wristband **21** and a wrist-facing layer **57** of wristband cap **22**. Microphone **28** is electrically coupled to wireless transceiver module **44** via foil conductors **36-37**.

[0051] In step **65**, wireless transceiver module **44** is inserted into component cavity **40**. In the embodiment of FIG. **2**, the components attached to PCB **35** are placed into component cavity **40** before wristband cap **22** is snapped into wristband **21**. In the embodiment of FIG. **9**, the antennas, conductors and components are first attached to PCB **35**. Then the antennas, conductors and components are placed onto wristband cap **22**. Finally, the wireless transceiver module **44** and the other components are inserted up into the component cavity in the center of wristband **21** by moving wristband cap **22** toward the bottom surface of wristband **21**.

[0052] In step **66**, wristband cap **22** is attached to wristband **21** so as to enclose component cavity **40**. In the embodiment of FIG. **2**, snapping wristband cap **22** past ridge **50** into wristband **21** forms a water-tight seal around component cavity **40**. In the embodiment of FIG. **9**, a water-tight seal is formed using ultrasonic welding to attach the edges of wristband cap **22** to the bottom surface of wristband **21**. Alternatively, the edges of wristband cap **22** can be glued to the bottom surface of wristband **21**.

[0053] Although certain specific embodiments are described above for instructional purposes, the teachings of this patent document have general applicability and are not limited to the specific embodiments described above. Although wrist phone **20** is described above as being controlled using only single button **49**, wrist phone **20** can also be voice controlled. In one aspect, stored telephone numbers can be dialed using speech recognition. For example, the user can dial a stored number by saying "dial Edgar." Although wristband **21** of wrist phone **20** is described above as having a flexible strap portion **23** comprising wrist-facing layer **27** and outer layer **26** made of molded plastic, layers **26-27** can also be made of leather or fabric. For example, shield layer **43** can be glued to the inside surface of the leather of wrist-facing layer **27**. Accordingly, various modifications, adaptations, and combinations of various features of the described embodiments can be practiced without departing from the scope of the invention as set forth in the claims.

What is claimed is:

1. A device comprising:
- a wristband made of molded plastic;
- a printed circuit board;
- a wireless transceiver module mounted on the printed circuit board;
- a wristband cap, wherein the wireless transceiver module is disposed between the wristband and the wristband cap; and
- a foil antenna integrated into the wristband, wherein the foil antenna is attached directly to the printed circuit board.

2. The device of claim **1**, wherein the wristband is made of a single piece of molded plastic.

3. The device of claim **1**, wherein a single piece of molded plastic is disposed beneath the entire surface area of the foil antenna.

4. The device of claim **1**, wherein the wristband has an outer layer and a wrist-facing layer, and wherein the foil antenna is disposed between the outer layer and the wrist-facing layer.

5. The device of claim **1**, further comprising:
- a microphone that is electrically coupled to the wireless transceiver module via a foil conductor, wherein the wristband has an outer layer and a wrist-facing layer, and wherein the foil conductor is disposed between the outer layer and the wrist-facing layer.

6. A device comprising:
- a wristband made of molded plastic, wherein the wristband has a flexible strap portion;
- a wireless transceiver module;
- a wristband cap, wherein the wireless transceiver module is disposed between the wristband and the wristband cap; and
- a microphone, wherein the microphone is located on the flexible strap portion at least two centimeters away from the wireless transceiver module.

7. The device of claim **6**, wherein the microphone is electrically coupled to the wireless transceiver module via a foil conductor, wherein the flexible strap portion has an outer layer and a wrist-facing layer, and wherein the foil conductor is disposed between the outer layer and the wrist-facing layer.

8. The device of claim **6**, wherein the wristband cap is made of molded plastic.

9. The device of claim **6**, further comprising:
- a foil antenna, wherein the wristband has an outer layer and a wrist-facing layer, and wherein the foil antenna is disposed between the outer layer and the wrist-facing layer.

10. The device of claim **6**, further comprising:
- a foil antenna, wherein the wristband has an outer layer, and wherein the foil antenna is disposed between the outer layer and the wristband cap.

11. A device comprising:
- a wristband made of molded plastic;
- a wireless transceiver module; and
- a wristband cap, wherein the wireless transceiver module is disposed between the wristband and the wristband cap, wherein the wristband has an inner surface and an outer surface, wherein the inner surface is covered by a layer of conductive material, and wherein the conductive material is adapted to form an electrical connection between two contacts when the outer surface is pressed.

12. The device of claim **11**, wherein the device has a single button that is operated by electrically connecting the two contacts through the conductive material.

13. The device of claim **11**, wherein each of the two contacts is made by a silver trace.

14. The device of claim **11**, wherein the wristband cap is made of the same molded plastic as is the wristband.

15. The device of claim **11**, further comprising:
- a microphone, wherein the microphone is located on the wristband at least two centimeters away from the wireless transceiver module.

16. A method of manufacturing a wrist phone, comprising:
- forming a wristband of molded plastic, wherein the wristband includes a component cavity;
- forming a wristband cap;
- inserting a wireless transceiver module into the component cavity; and
- attaching the wristband cap to the wristband so as to enclose the component cavity.

17. The method of claim **16**, wherein the wristband has a flexible strap portion, wherein the flexible strap portion has an outer layer and a wrist-facing layer, further comprising:
- placing a foil antenna between the outer layer and the wrist-facing layer of the flexible strap portion.

18. The method of claim **17**, further comprising:
- placing a microphone in the flexible strap portion of the wristband at least two centimeters away from the wireless transceiver module.

19. The method of claim **18**, wherein the microphone is electrically coupled to the wireless transceiver module via a foil conductor.

20. The method of claim **16**, wherein the wristband has an inner surface and an outer surface, further comprising:
- coating the inner surface of the wristband with a layer of conductive material.

* * * * *