US007096054B2

(12) **United States Patent**
Abdul-Hafiz et al.

(10) **Patent No.: US 7,096,054 B2**
(45) **Date of Patent: Aug. 22, 2006**

(54) **LOW NOISE OPTICAL HOUSING**

(75) Inventors: **Yassir Abdul-Hafiz**, Irvine, CA (US); **John Schmidt**, Lake Forest, CA (US)

(73) Assignee: **Masimo Corporation**, Irvine, CA (US)

(*) Notice: Subject to any disclaimer, the term of this patent is extended or adjusted under 35 U.S.C. 154(b) by 333 days.

(21) Appl. No.: **10/632,012**

(22) Filed: **Jul. 31, 2003**

(65) **Prior Publication Data**

US 2004/0039272 A1 Feb. 26, 2004

Related U.S. Application Data

(60) Provisional application No. 60/400,177, filed on Aug. 1, 2002.

(51) **Int. Cl.**
A61B 5/00 (2006.01)

(52) **U.S. Cl.** **600/344**; 600/310

(58) **Field of Classification Search** 600/309–310, 600/323, 344; 439/43, 55
See application file for complete search history.

(56) **References Cited**

U.S. PATENT DOCUMENTS

4,685,464	A	8/1987	Goldberger et al.	
4,700,708	A *	10/1987	New et al.	600/331
4,960,128	A	10/1990	Gordon et al.	
4,964,408	A	10/1990	Hink et al.	
4,974,591	A *	12/1990	Awazu et al.	600/344
5,041,187	A	8/1991	Hink et al.	
5,069,213	A	12/1991	Polczynski	
5,163,438	A	11/1992	Gordon et al.	
5,337,744	A	8/1994	Branigan	
D353,195	S	12/1994	Savage et al.	
D353,196	S	12/1994	Savage et al.	
5,431,170	A	7/1995	Mathews	
D361,840	S	8/1995	Savage et al.	
D362,063	S	9/1995	Savage et al.	
5,452,717	A	9/1995	Branigan et al.	
D363,120	S	10/1995	Savage et al.	
5,482,036	A	1/1996	Diab et al.	
5,490,505	A	2/1996	Diab et al.	
5,494,043	A	2/1996	O'Sullivan et al.	
5,533,511	A	7/1996	Kaspari et al.	
5,562,002	A	10/1996	Lalin	
5,590,649	A	1/1997	Caro et al.	
5,602,924	A	2/1997	Durand et al.	
5,632,272	A	5/1997	Diab et al.	
5,638,816	A	6/1997	Kiani-Azarbayjany et al.	
5,638,818	A	6/1997	Diab et al.	
5,645,440	A	7/1997	Tobler et al.	
5,685,299	A	11/1997	Diab et al.	
D393,830	S	4/1998	Tobler et al.	
5,743,262	A	4/1998	Lepper, Jr. et al.	
5,758,644	A	6/1998	Diab et al.	

(Continued)

Primary Examiner—Eric F. Winakur
(74) *Attorney, Agent, or Firm*—Knobbe, Martens, Olson & Bear, LLP

(57) **ABSTRACT**

Aspects of the invention include an optical housing including a substrate having a reflective side and an absorbing side. The substrate has a generally planar base portion and a protruding cover portion. The cover portion defines a pocket on the absorbing side. The substrate has an open position where the base portion is distal the cover and a closed position where the base portion is proximate the cover. The substrate is configured to enclosed a detector within the pocket in the closed position. The base portion defines an aperture generally centered within the base portion and aligned with the detector in the closed position so as to pass light through to the detector.

16 Claims, 17 Drawing Sheets

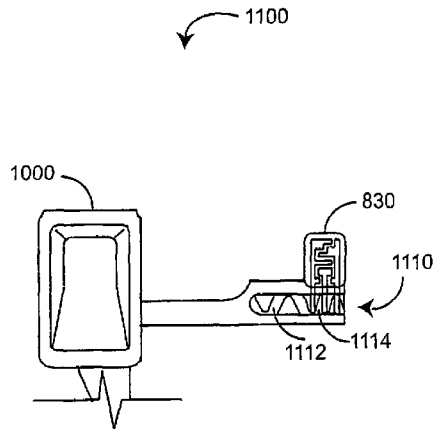

MASIMO 2042
Apple v. Masimo
IPR2024-00296

U.S. PATENT DOCUMENTS

5,760,910	A	6/1998	Lepper, Jr. et al.
5,769,785	A	6/1998	Diab et al.
5,782,757	A	7/1998	Diab et al.
5,785,659	A	7/1998	Caro et al.
5,791,347	A	8/1998	Flaherty et al.
5,810,734	A	9/1998	Caro et al.
5,823,950	A	10/1998	Diab et al.
5,830,131	A	11/1998	Caro et al.
5,833,618	A	11/1998	Caro et al.
5,860,919	A	1/1999	Kiani-Azarbayjany et al.
5,890,929	A	4/1999	Mills et al.
5,904,654	A	5/1999	Wohltmann et al.
5,919,134	A	7/1999	Diab
5,934,925	A	8/1999	Tobler et al.
5,940,182	A	8/1999	Lepper, Jr. et al.
5,995,855	A	11/1999	Kiani et al.
5,997,343	A	12/1999	Mills et al.
6,002,952	A	12/1999	Diab et al.
6,011,986	A	1/2000	Diab et al.
6,027,452	A	2/2000	Flaherty et al.
6,036,642	A	3/2000	Diab et al.
6,045,509	A	4/2000	Caro et al.
6,067,462	A	5/2000	Diab et al.
6,081,735	A	6/2000	Diab et al.
6,088,607	A	7/2000	Diab et al.
6,110,522	A	8/2000	Lepper, Jr. et al.
6,144,868	A	11/2000	Parker
6,151,516	A	11/2000	Kiani-Azarbayjany et al.
6,152,754	A	11/2000	Gerhardt et al.
6,157,850	A	12/2000	Diab et al.
6,165,005	A	12/2000	Mills et al.
6,184,521	B1	2/2001	Coffin, IV et al.
6,206,830	B1	3/2001	Diab et al.
6,229,856	B1	5/2001	Diab et al.
6,236,872	B1	5/2001	Diab et al.
6,256,523	B1	7/2001	Diab et al.
6,263,222	B1	7/2001	Diab et al.
6,278,522	B1	8/2001	Lepper, Jr. et al.
6,280,213	B1	8/2001	Tobler et al.
6,285,896	B1	9/2001	Tobler et al.
6,321,100	B1	11/2001	Parker
6,334,065	B1	12/2001	Al-Ali et al.
6,343,224	B1	1/2002	Parker
6,349,228	B1	2/2002	Kiani et al.
6,360,114	B1	3/2002	Diab et al.
6,371,921	B1	4/2002	Caro et al.
6,377,829	B1	4/2002	Al-Ali
6,388,240	B1	5/2002	Schulz et al.
6,397,091	B1	5/2002	Diab et al.
6,430,525	B1	8/2002	Weber et al.
6,463,311	B1	10/2002	Diab
6,470,199	B1	10/2002	Kopotic et al.
6,501,975	B1	12/2002	Diab et al.
6,515,273	B1	2/2003	Al-Ali
6,519,487	B1	2/2003	Parker
6,525,386	B1	2/2003	Mills et al.
6,526,300	B1	2/2003	Kiani et al.
6,541,756	B1	4/2003	Schulz et al.
6,542,764	B1	4/2003	Al-Ali et al.
6,580,086	B1	6/2003	Schulz et al.
6,584,336	B1	6/2003	Ali et al.
6,595,316	B1	7/2003	Cybulski et al.
6,597,933	B1	7/2003	Kiani et al.
6,606,511	B1	8/2003	Ali et al.
6,632,181	B1	10/2003	Flaherty et al.
6,640,116	B1	10/2003	Diab
6,643,530	B1	11/2003	Diab et al.
6,650,917	B1	11/2003	Diab et al.
6,654,624	B1	11/2003	Diab et al.
6,658,276	B1	12/2003	Kianl et al.
6,661,161	B1	12/2003	Lanzo et al.
6,671,531	B1	12/2003	Al-Ali et al.
6,678,543	B1	1/2004	Diab et al.
6,684,090	B1	1/2004	Ali et al.
6,684,091	B1	1/2004	Parker
6,697,656	B1	2/2004	Al-Ali
6,697,658	B1	2/2004	Al-Ali
RE38,476	E	3/2004	Diab et al.
6,699,194	B1	3/2004	Diab et al.
6,714,804	B1	3/2004	Al-Ali et al.
RE38,492	E	4/2004	Diab et al.
6,721,585	B1	4/2004	Parker
6,725,075	B1	4/2004	Al-Ali
6,735,459	B1	5/2004	Parker
6,745,060	B1	6/2004	Diab et al.
6,760,607	B1	7/2004	Al-All
6,770,028	B1	8/2004	Ali et al.
6,771,994	B1	8/2004	Kiani et al.
6,792,300	B1	9/2004	Diab et al.
6,813,511	B1	11/2004	Diab et al.
6,816,741	B1	11/2004	Diab
6,822,564	B1	11/2004	Al-Ali
6,826,419	B1	11/2004	Diab et al.
6,830,711	B1	12/2004	Mills et al.
6,850,787	B1	2/2005	Weber et al.
6,850,788	B1	2/2005	Al-Ali
6,852,083	B1	2/2005	Caro et al.
6,861,639	B1	3/2005	Al-Ali
6,898,452	B1	5/2005	Al-Ali et al.
6,920,345	B1	7/2005	Al-Ali et al.
6,931,268	B1	8/2005	Kiani-Azarbayjany et al.
6,934,570	B1	8/2005	Kiani et al.
6,939,305	B1	9/2005	Flaherty et al.
6,943,348	B1	9/2005	Coffin, IV
6,950,687	B1	9/2005	Al-Ali
6,961,598	B1	11/2005	Diab
6,970,792	B1	11/2005	Diab
6,979,812	B1	12/2005	Al-Ali
6,985,764	B1	1/2006	Mason et al.
6,993,371	B1	1/2006	Kiani et al.
6,996,427	B1	2/2006	Ali et al.
6,999,904	B1	2/2006	Weber et al.

* cited by examiner

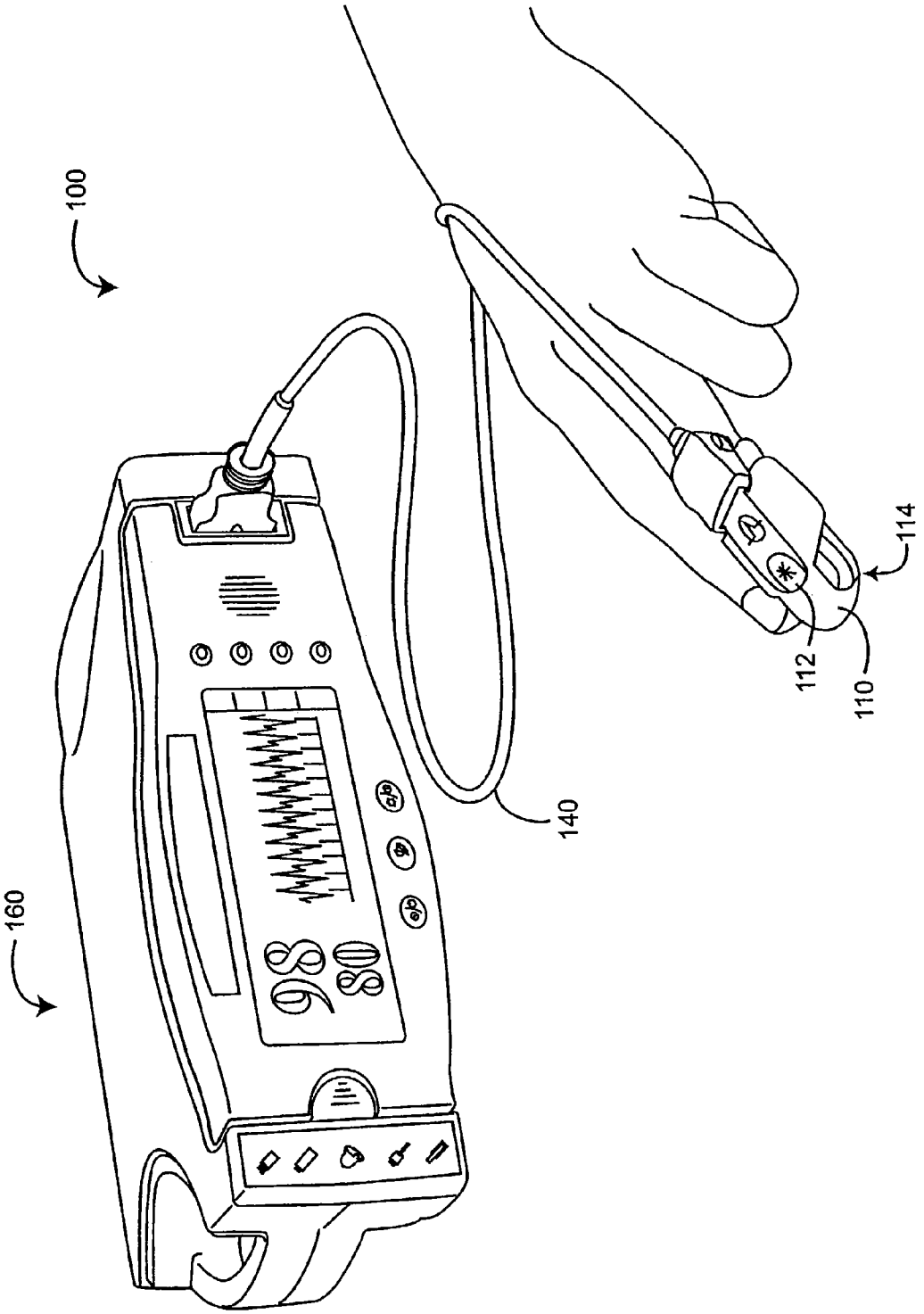

FIG. 1 (Prior Art)

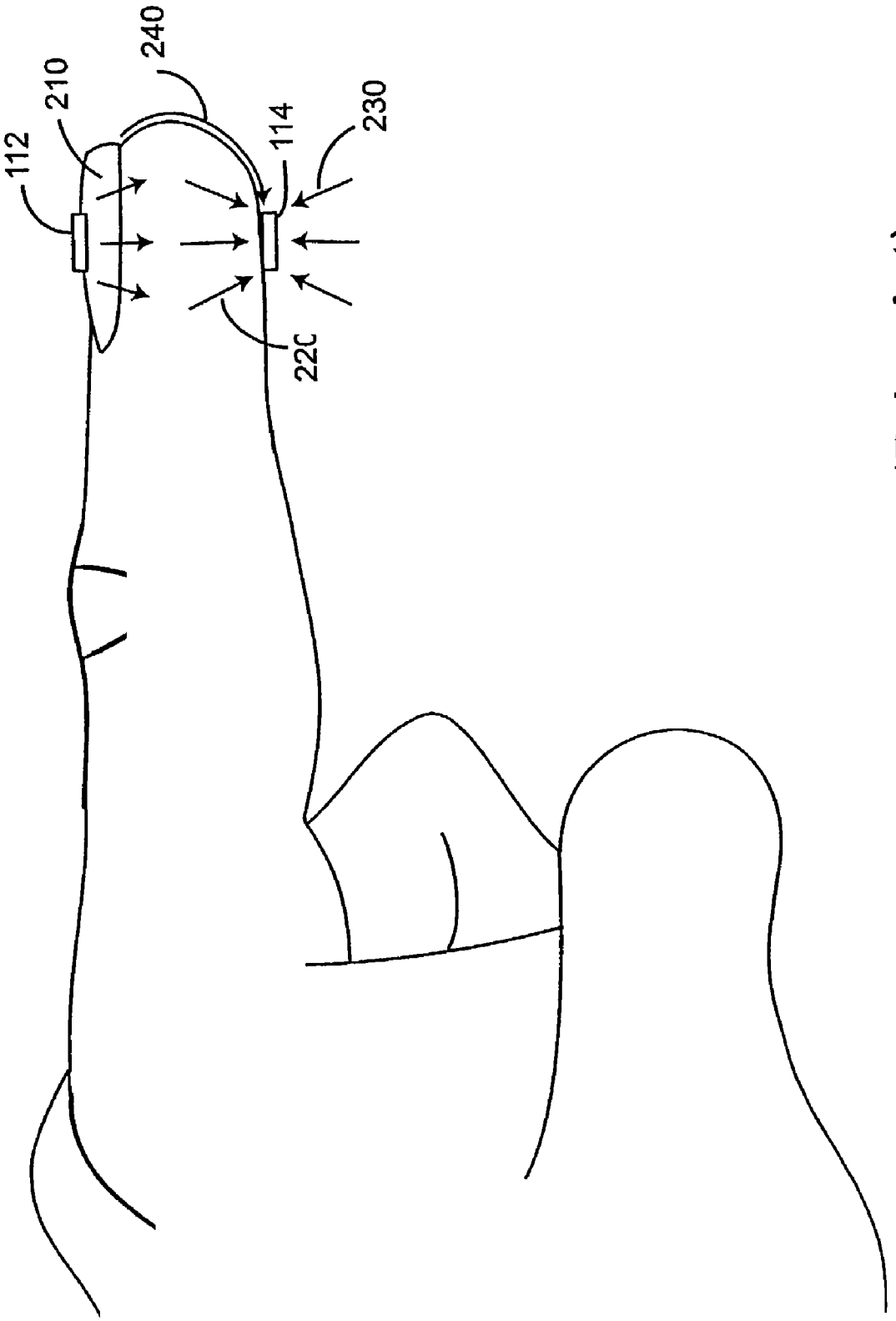

FIG. 2 (Prior Art)

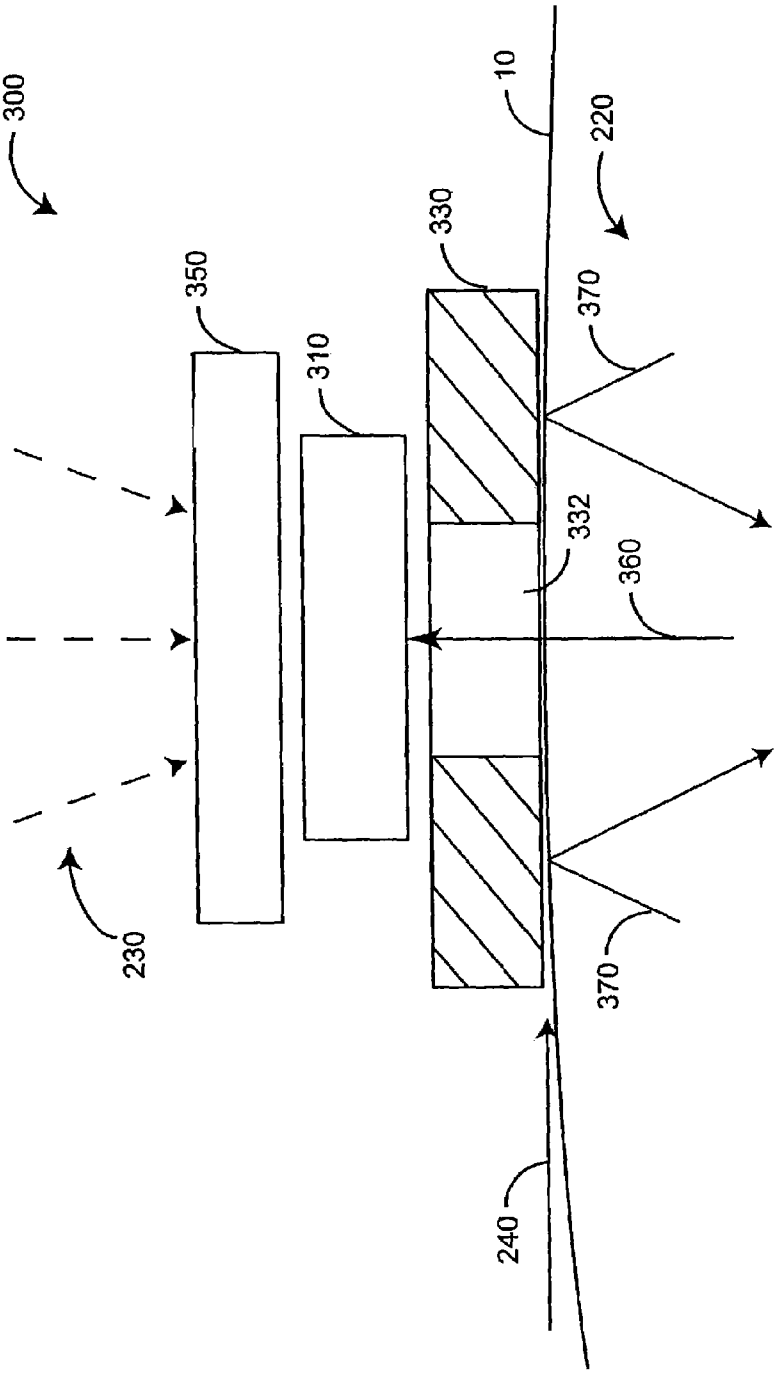

FIG. 3 (Prior Art)

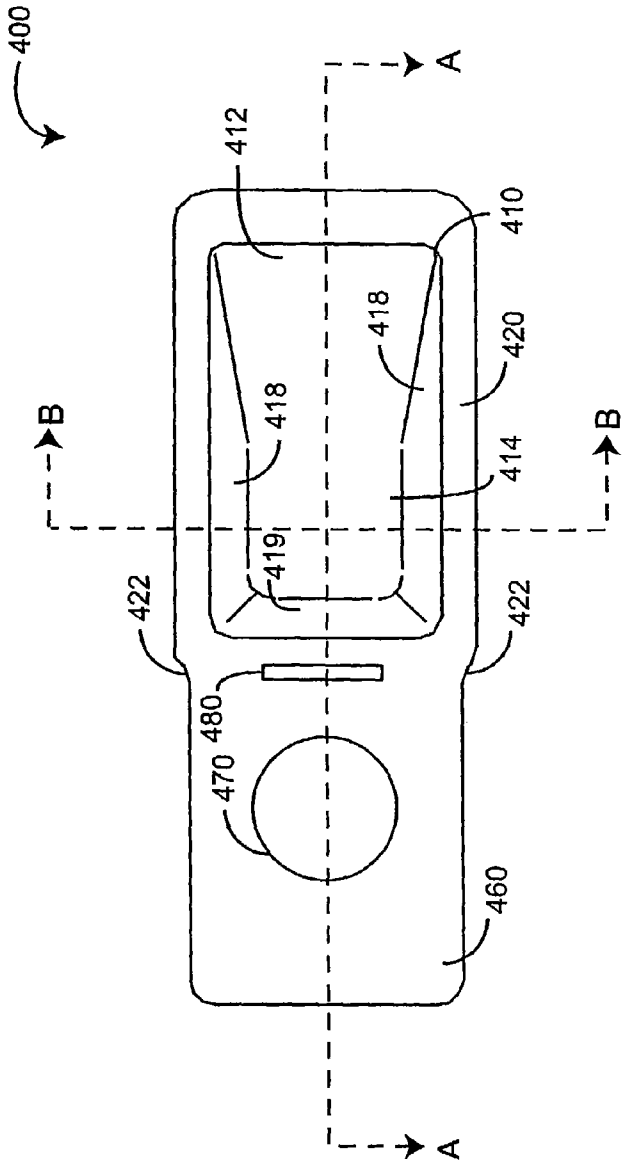

FIG. 4A

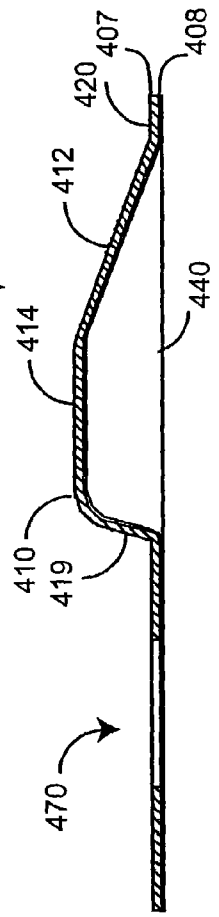

FIG. 4B

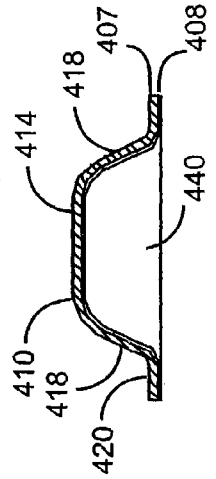

FIG. 4C

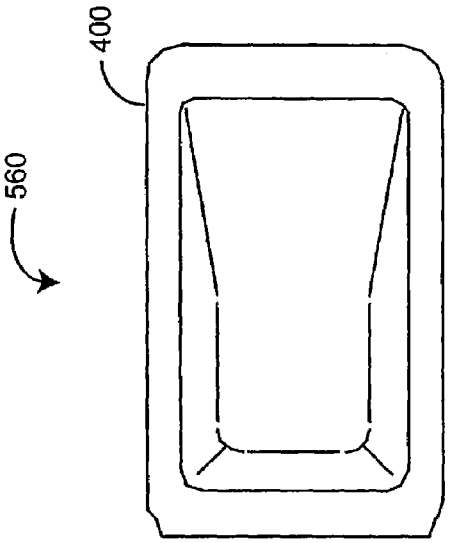

FIG. 5C

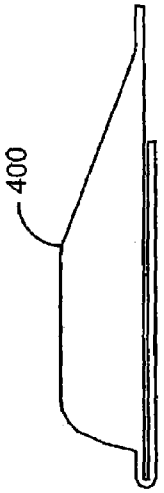

FIG. 5D

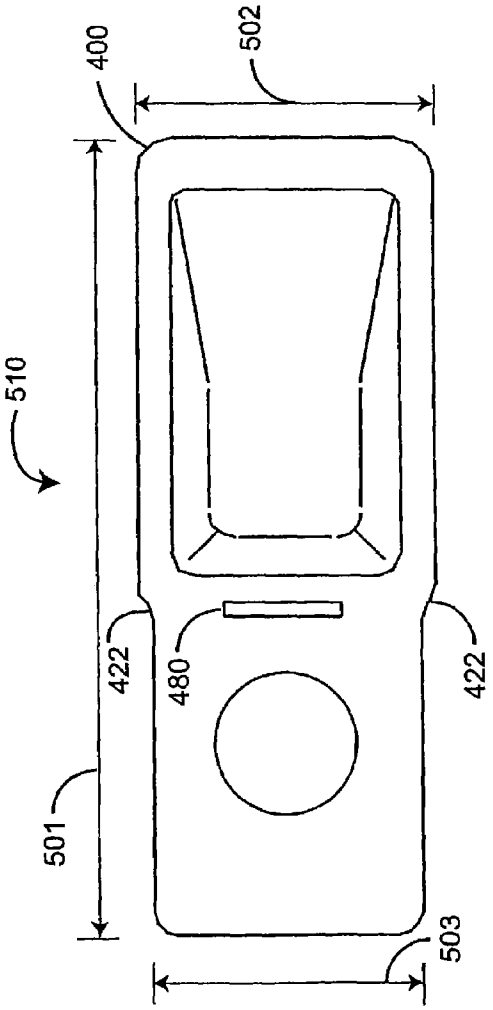

FIG. 5A

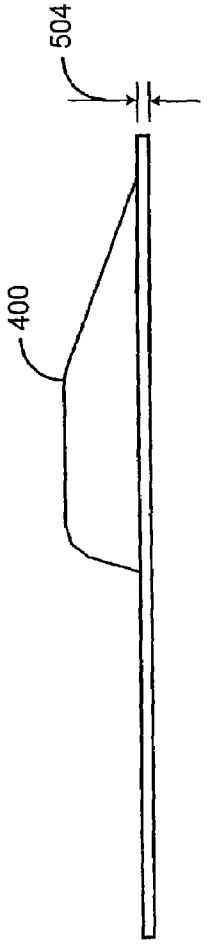

FIG. 5B

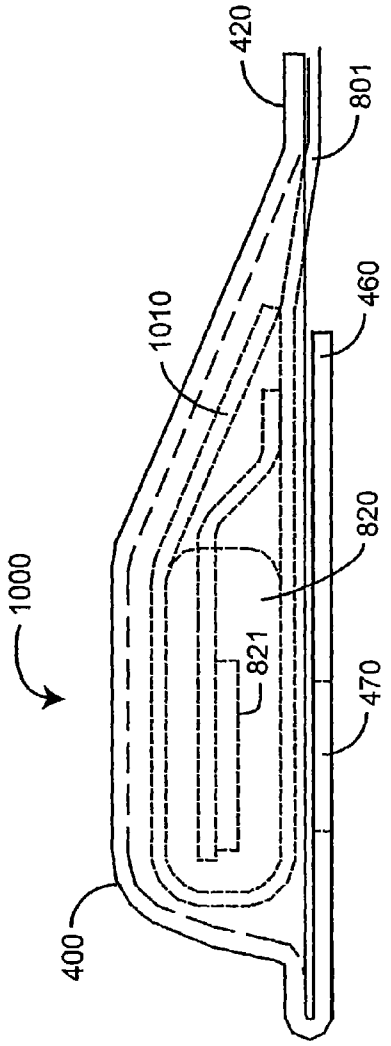
1000
400
1010
420
801
460
820
821
470

FIG. 6A

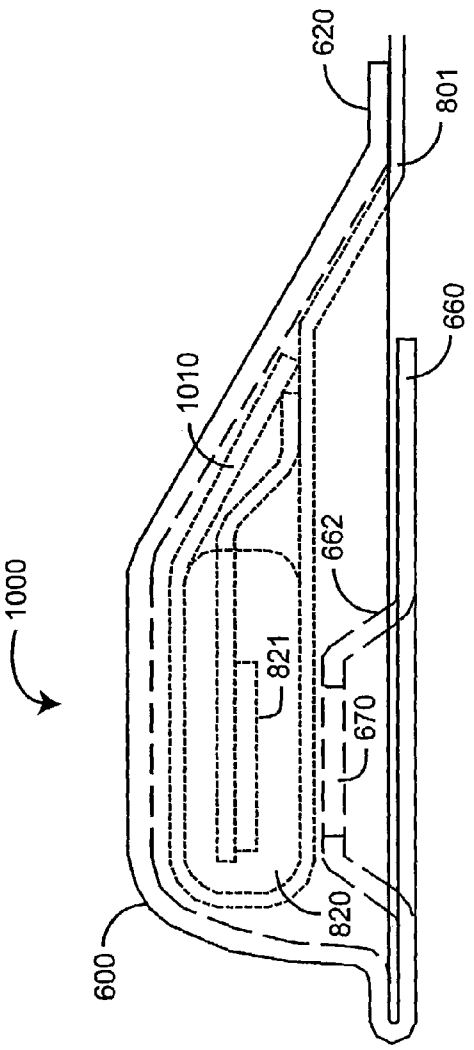
1000
600
1010
620
801
660
662
821
670
820

FIG. 6B

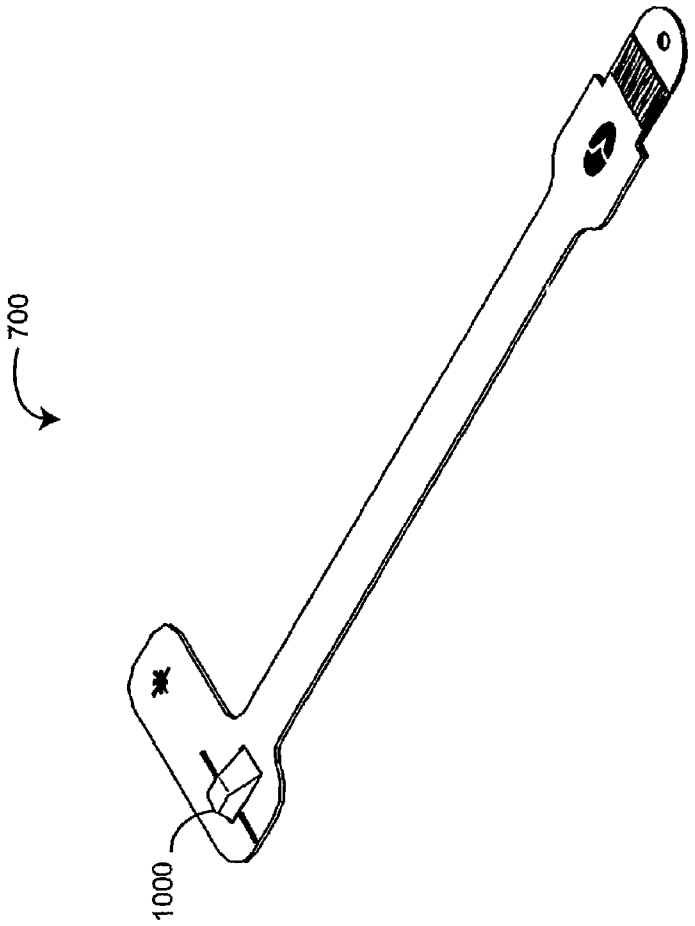

FIG. 7B

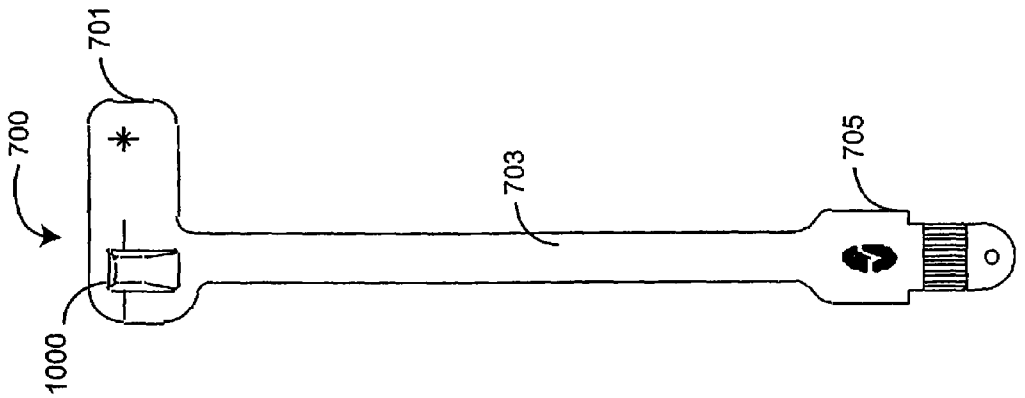

FIG. 7A

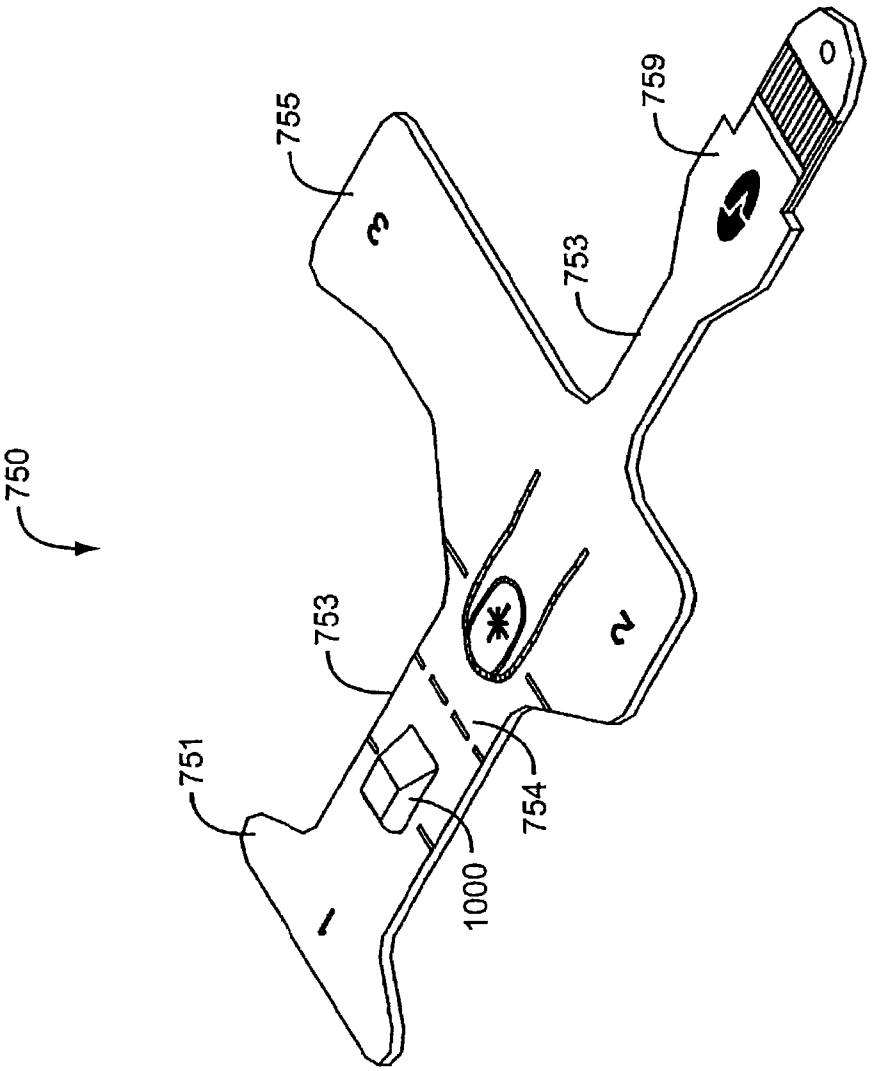

FIG. 7C

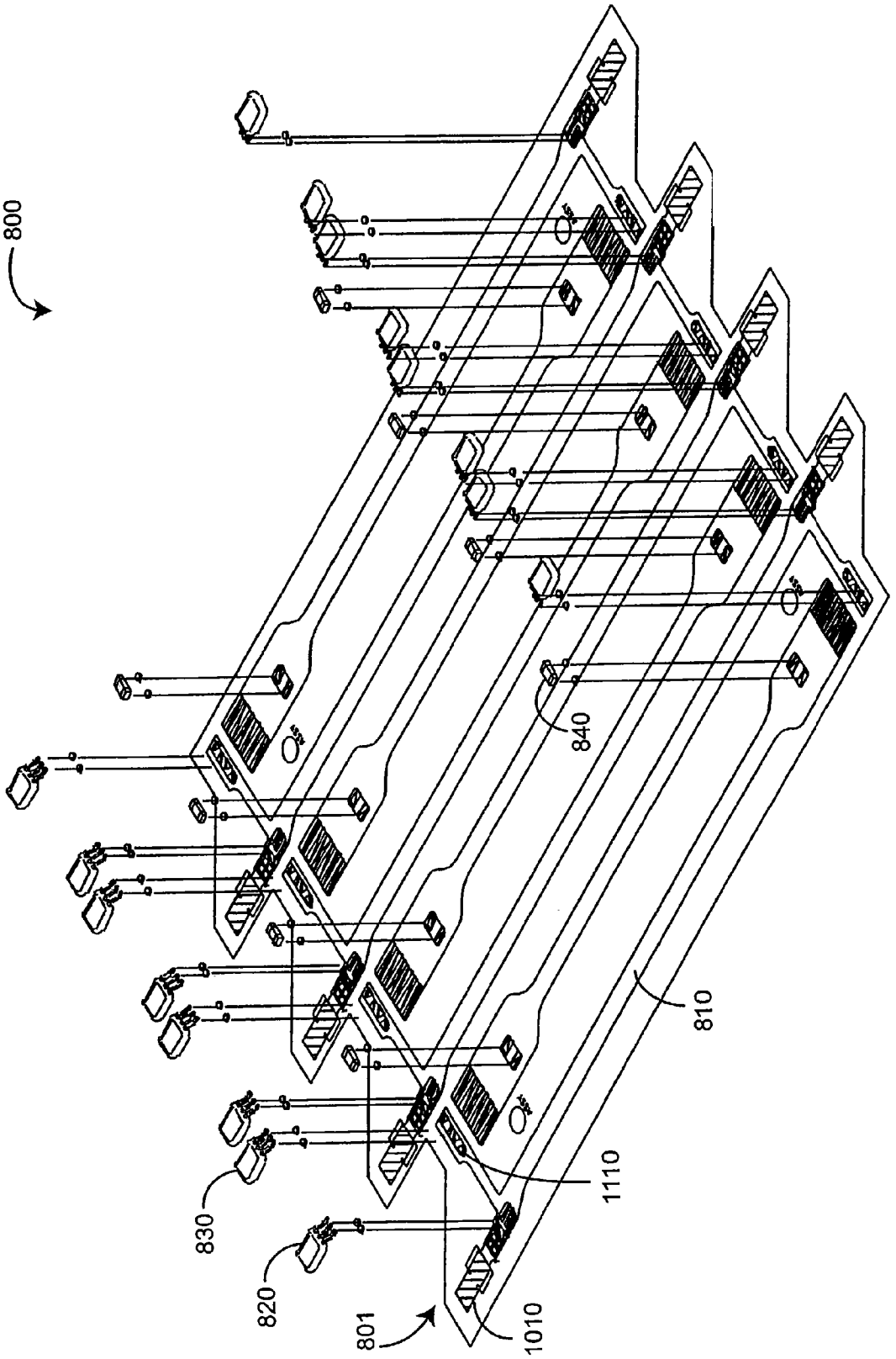

FIG. 8A

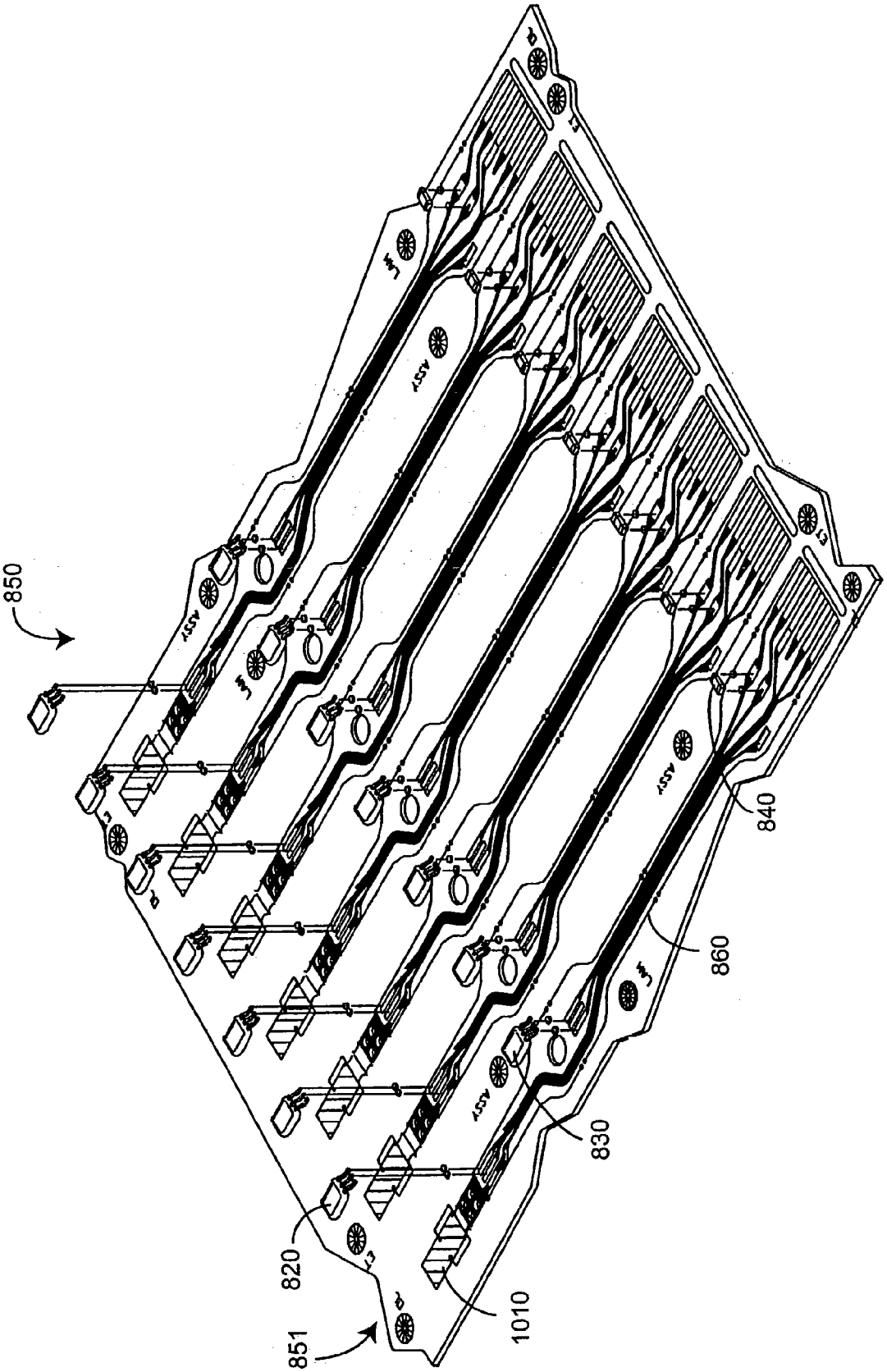

FIG. 8B

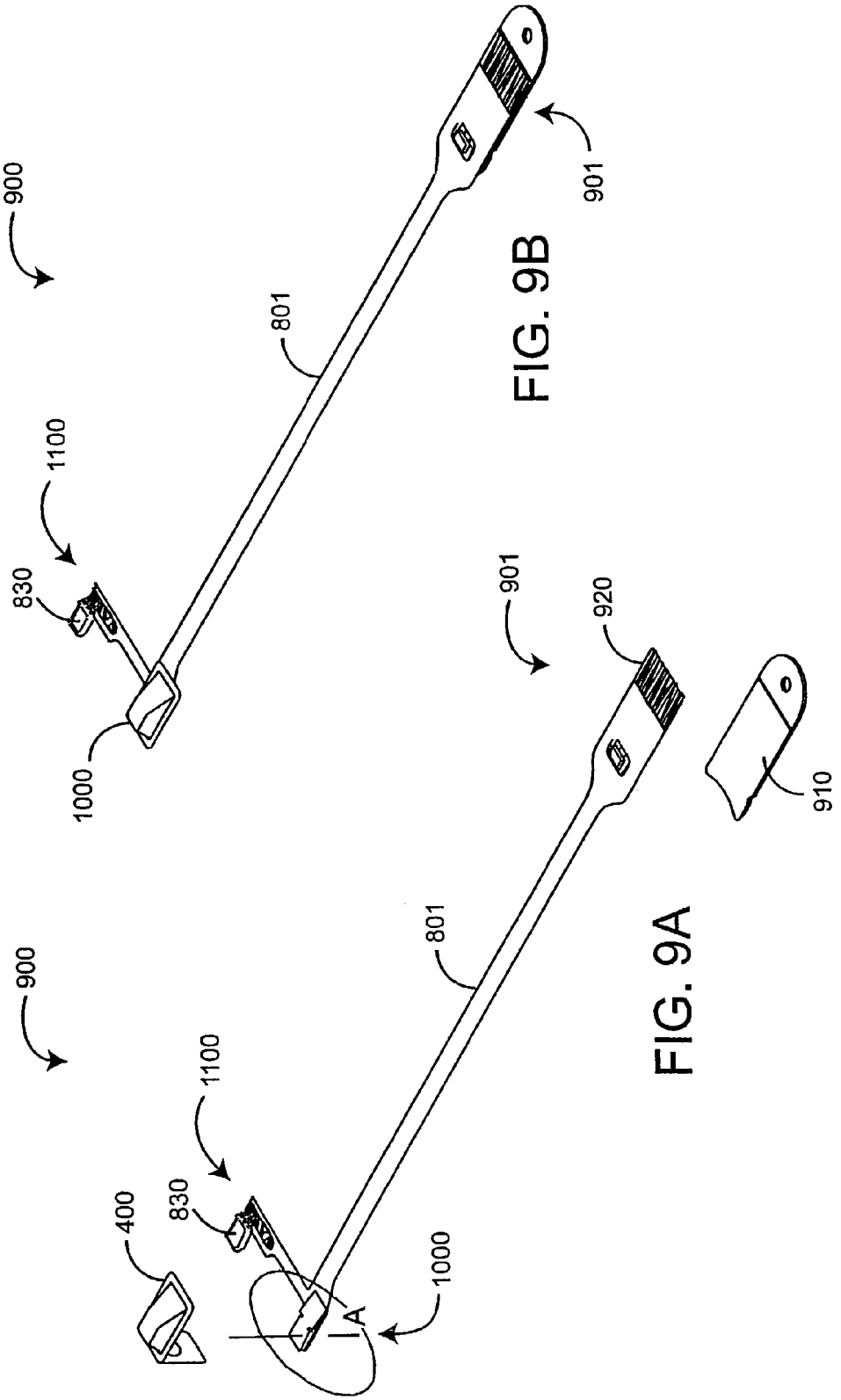
900
1100
830
1000
801
901
FIG. 9B
900
1100
830
400
1000
A
801
901
920
910
FIG. 9A

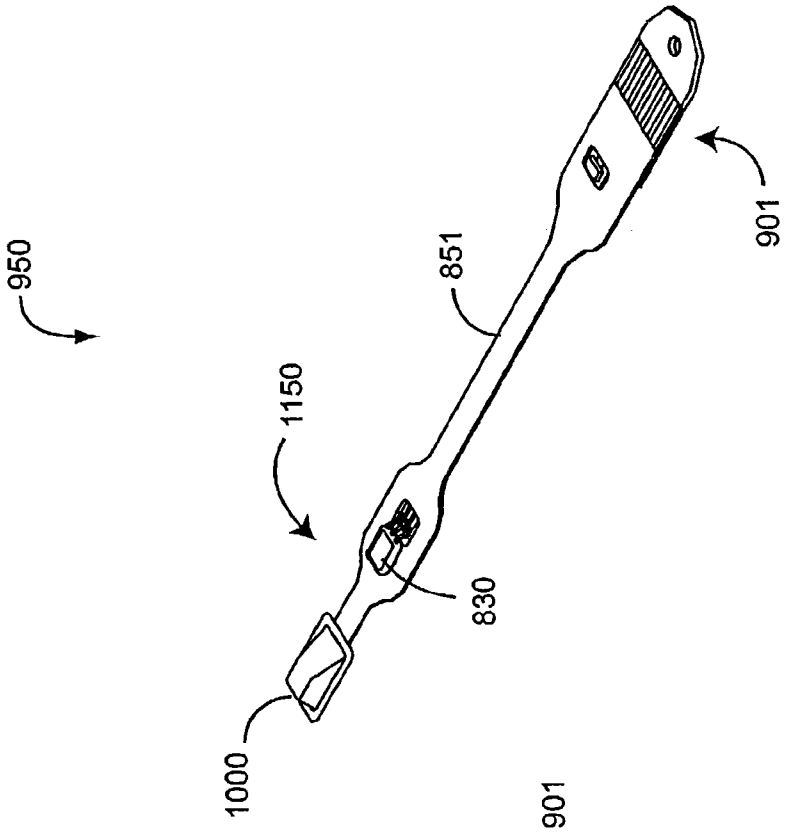

FIG. 9D

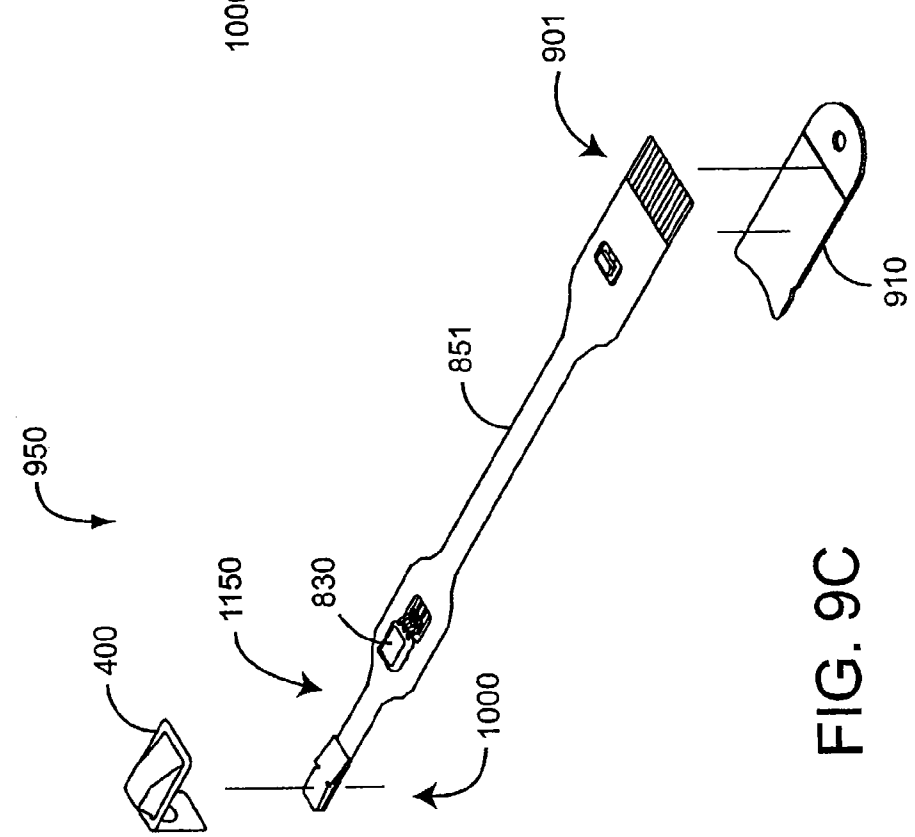

FIG. 9C

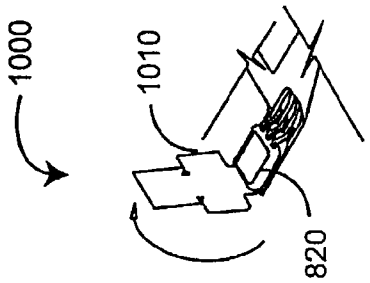

DETAIL A

FIG. 10B

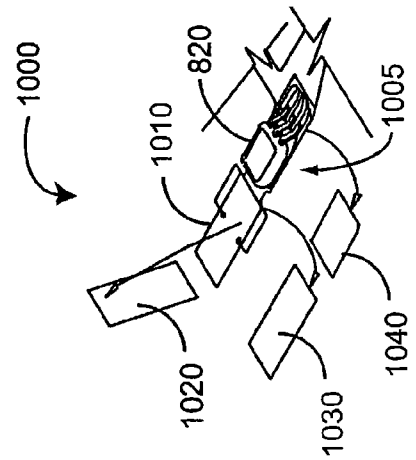

DETAIL A

FIG. 10A

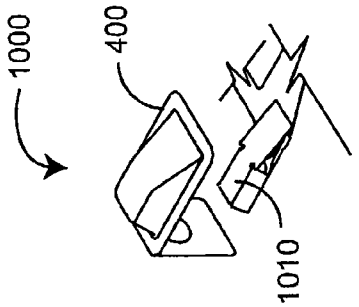

DETAIL A

FIG. 10C

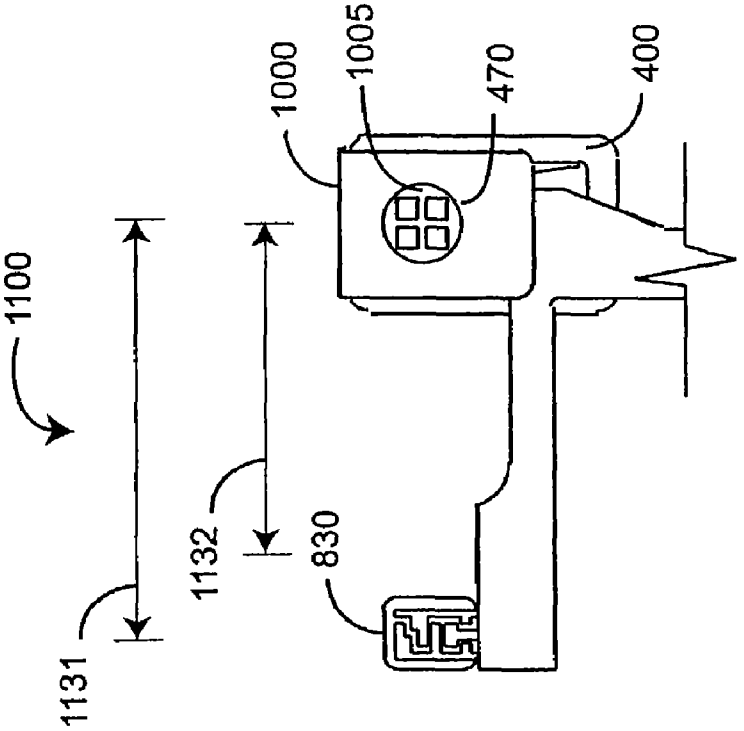

FIG. 11B

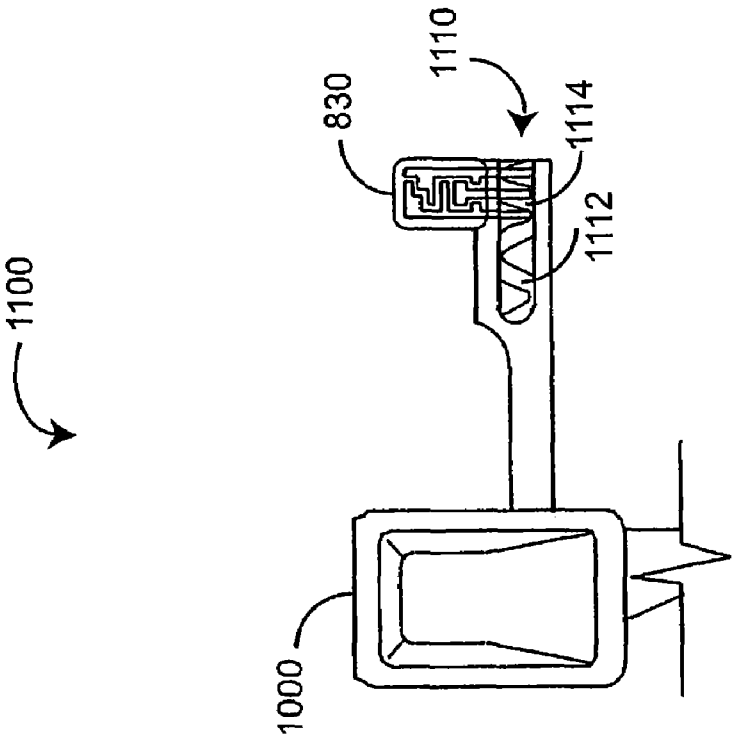

FIG. 11A

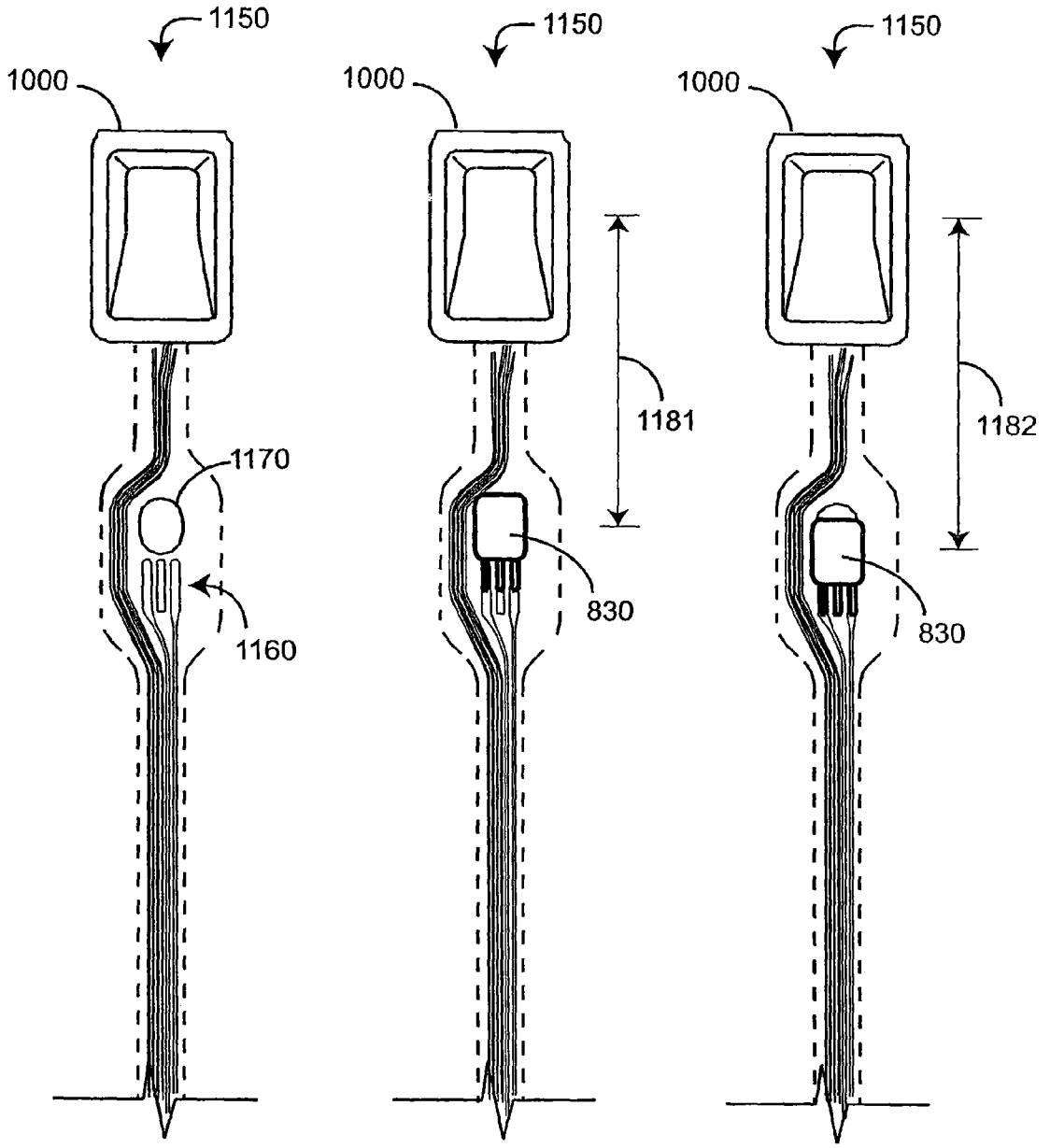

FIG. 11C FIG. 11D FIG. 11E

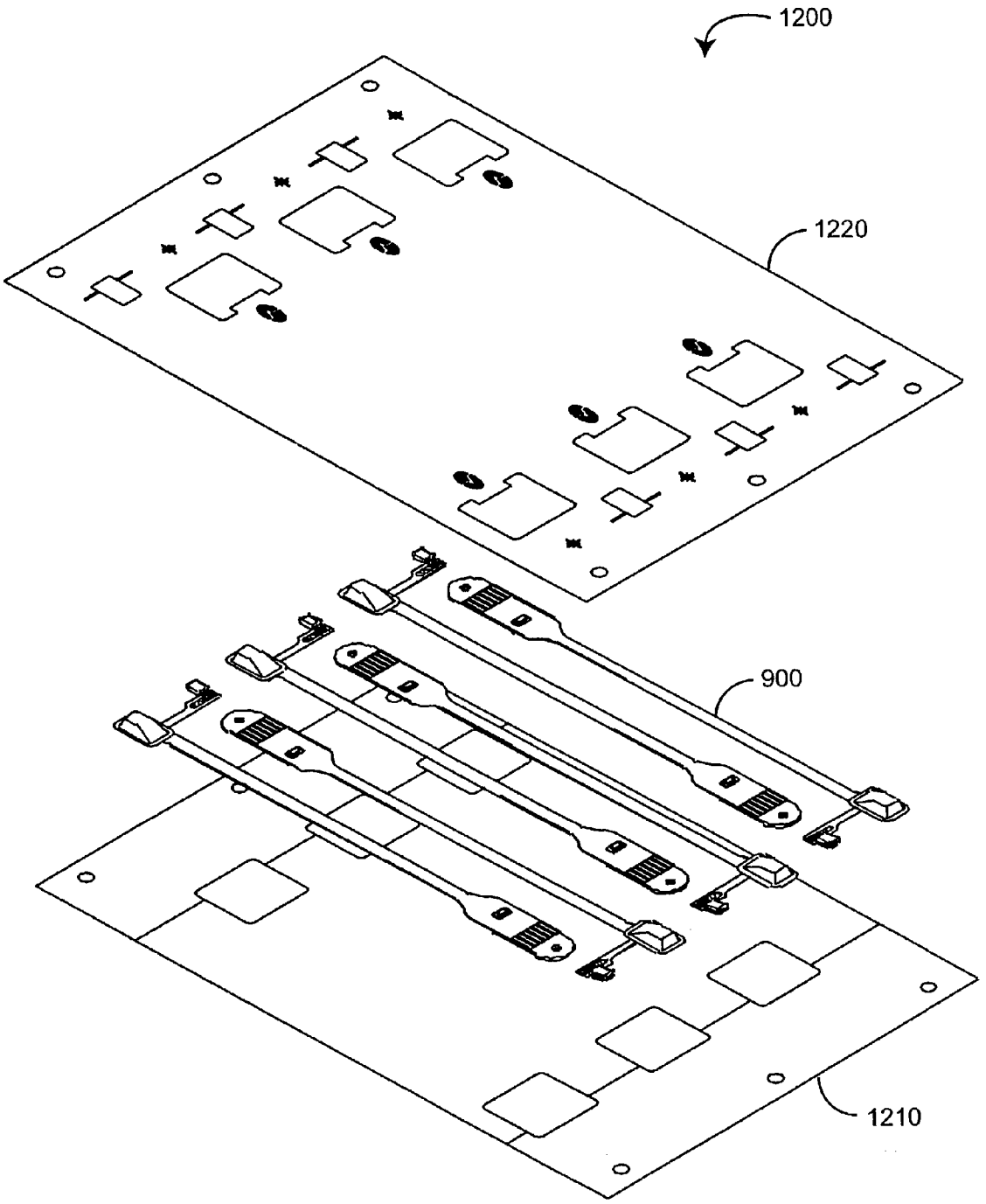

FIG 12A

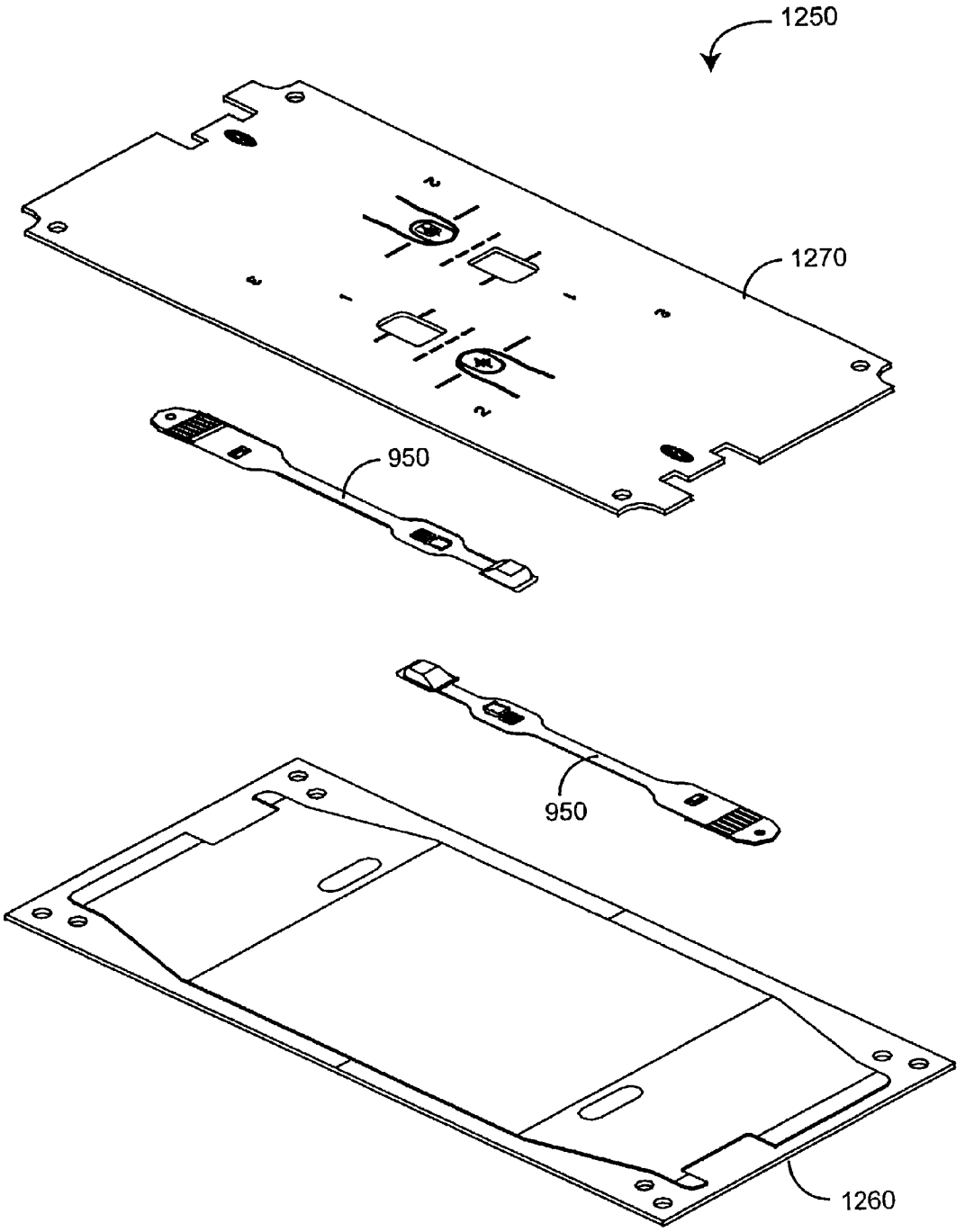

FIG. 12B

LOW NOISE OPTICAL HOUSING

REFERENCE TO RELATED APPLICATION

This application claims the benefit of U.S. Provisional Application No. 60/400,177, Aug. 1, 2002. The present application incorporates the foregoing disclosures herein by reference.

BACKGROUND OF THE INVENTION

Pulse oximetry is a widely accepted noninvasive procedure for measuring the oxygen saturation level of arterial blood, an indicator of a person's oxygen supply. Early detection of low blood oxygen level is critical in the medical field, for example in critical care and surgical applications, because an insufficient supply of oxygen can result in brain damage and death in a matter of minutes. FIG. **1** illustrates a pulse oximetry system **100** having a sensor **110** applied to a patient, a monitor **160** and a patient cable **140** connecting the sensor **110** and the monitor **160**. The sensor **110** is attached to a tissue site, such as an adult patient's finger (as shown). Other sensor types are configured to attach, say, to a neonatal patient's foot. The sensor **110** is configured with both red and infrared LEDs **112** (hidden) that, for finger attachment, project light through the fingernail and into the blood vessels and capillaries underneath. A photodiode **114** (not visible) is positioned at the finger tip opposite the fingernail so as to detect the LED emitted light as it emerges from the finger tissues.

SUMMARY OF THE INVENTION

FIG. **2** illustrates various optical noise sources for a sensor **110** (FIG. **1**). Shown is the placement of the sensor LEDs **112** and detector **114** on a finger without showing the associated electrical interconnections, base stock and face stock materials. Emitted light **210** is projected from the LEDs **112** into the fingernail bed. Received light **220** propagates through the finger tissues to the detector **114**, subject to absorption and scattering, to generate a desired sensor signal. Light which illuminates the detector **114** without propagating through the finger is unwanted optical "noise" that corrupts the desired sensor signal. Noise sources include ambient light **230** and piped light **240**. Ambient light **230** is transmitted to the detector **114** from external light sources, i.e. light sources other than the LEDs **112**. Piped light **240** is stray light from the LEDs **112** that is transmitted around a tissue site along a light conductive surface, such as a reflective inner surface of face stock material, directly to the detector **114**. Light piping and light piping reduction are described in U.S. Pat. No. 5,782,757 entitled "Low Noise Optical Probe," which is assigned Masimo Corporation, Irvine, Calif. and incorporated by reference herein.

FIG. **3** illustrates a prior art low noise sensor **300**. The sensor **300** has a detector **310**, a spacer **330** and an optical shield **350**. The detector **310** is configured to receive light **220** that has propagated through a tissue site **10**, as described with respect to FIGS. **1**–**2**, above. The spacer **330** is positioned between the tissue site **10** and the detector **310**, providing an optical barrier so as to reduce the intensity of piped light **240** that reaches the detector **310**. The spacer **330** defines an aperture **332** that allows a transmitted portion **360** of propagated light **220** to reach the detector **310**. A blocked portion **370** of propagated light **220** is reflected back into the tissue and/or absorbed by the spacer **330**, depending upon the spacer material. The optical shield **350** may be a metal

foil or other opaque material that prevents ambient light **230** from reaching the detector **310**. Further, the detector **310**, spacer **330** and optical shield **350** may be enclosed in a housing (not shown) of opaque material that further prevents ambient light **230** from reaching the detector **310**. A low noise sensor is described in U.S. Pat. No. 5,782,757, cited above.

One aspect of a low noise optical housing is a substrate having a reflective side and an absorptive side. The substrate has a generally planar base portion and a protruding cover portion. The cover portion defines a pocket on the absorptive side. The substrate has an open position with the base portion distal the cover portion and a closed position with the base portion proximate the cover portion. The substrate is configured to enclosed a detector within the pocket in the closed position. The base portion defines an aperture generally centered within the base portion and aligned with the detector in the closed position so as to pass light through to the detector.

Another aspect of a low noise optical housing is a method comprising the steps of providing a substrate having an absorptive side and a reflective side and forming a cover portion of the substrate so as to create a pocket on the absorptive side. Further steps include punching the substrate so as to separate a housing from the substrate, securing a the pocket, and enclosing the detector with the housing.

A further aspect of a low noise optical housing comprises a light reflecting cover means for shielding against ambient light and a base means for blocking piped light. The base means adjoins the cover means. The housing also comprises a light absorbing pocket means for securing a detector. The pocket means is defined by the cover means and the base means. The housing further comprises an aperture means for allowing light transmitted through a tissue site to be received by the detector. The aperture means is defined by the base means.

One aspect of a sensor circuit comprises a circuit substrate, a pair of pads disposed on an optical portion of the circuit substrate, a plurality of pinouts disposed on a connector portion of the circuit substrate, and a plurality of conductive paths providing electrical communication between the pads and the pinouts. The pads are configured to mechanically mount a corresponding pair of optical components to the circuit substrate and to electrically connect the components to the conductive paths. At least one of the pads is adapted to mount one of the components at either a first spacing or a second spacing from another one of the components. The second spacing is greater than the first spacing by a predetermined mount.

Another aspect of a sensor circuit comprisesa flexible circuit substrate, a first pad disposed on the circuit substrate and configured to mount a detector, and a second pad disposed on the circuit substrate and configured to mount an emitter. At least one of the first pad and the second pad are adapted so that a detector-emitter spacing is a first distance or a second distance depending on the placement of at least one of the detector and the emitter. The first distance and the second distance are predetermined so as to accommodate particular sensor types.

A further aspect of a sensor circuit is a method comprising the step of predetermining a plurality of optical component spacings based upon a corresponding plurality of sensor types. The sensor types are indicative of tissue site location and patient size. Further steps are configuring a pad to fixedly mount and electrically connect an optical component to a flexible circuit at a plurality of positions, where the positions correspond to the spacings, and mounting the

optical component to a particular one of the positions to construct a particular one of the sensor types.

An additional aspect of a sensor circuit is a sensor comprising a circuit substrate means for mounting and electrically connecting components and a pad means disposed on the circuit substrate for fixedly mounting an emitter at either a first spacing or at a second spacing from a detector. The sensor also comprises a tape stock means for attaching the emitter and the detector to a tissue site.

For purposes of summarizing the invention, certain aspects, advantages and novel features of the invention have been described herein. Of course, it is to be understood that not necessarily all such aspects, advantages or features will be embodied in any particular embodiment of the invention.

BRIEF DESCRIPTION OF THE DRAWINGS

A general architecture that implements the various features of the invention will now be described with reference to the drawings. The drawings and the associated descriptions are provided to illustrate embodiments of the invention and not to limit the scope of the invention. Throughout the drawings, reference numbers are re-used to indicate correspondence between referenced elements. In addition, the first digit of each reference number indicates the figure in which the element first appears.

FIG. **1** is a perspective view of a prior art pulse oximetry system;

FIG. **2** is a diagram illustrating optical noise sources and a prior art sensor;

FIG. **3** is a diagram illustrating optical noise sources and a prior art reduced noise sensor;

FIGS. **4**A–C are top, side cross-section and front cross-section views, respectively, of a low noise optical housing;

FIGS. **5**A–B are top arid side views of a low noise optical housing in an open position;

FIGS. **5**C–D are top and side views of a low noise optical housing in a closed position;

FIGS. **6**A–B are detailed side views of alternative embodiments of a low noise optical housing enclosing a detector;

FIGS. **7**A–B are top and perspective views, respectively, of an assembled pulse oximetry sensor configured for a neonate and incorporating a low noise optical housing;

FIG. **7**C is a perspective view of an assembled pulse oximetry sensor configured for an adult and incorporating a low noise optical housing;

FIGS. **8**A–B are exploded perspective views of neonate and adult flexible circuit assemblies, respectively, configured for a low noise optical housing;

FIGS. **9**A–B are perspective views of a neonate sensor assembly showing installation of a low noise optical housing;

FIGS. **9**C–D are perspective views of an adult sensor assembly showing installation of a low noise optical housing;

FIGS. **10**A–C are detailed perspective views of an unassembled, a partially assembled and a fully assembled EMI shield, respectively, prior to low noise optical housing installation;

FIGS. **11**A–B are detailed top and bottom views of a neonate or infant sensor optical assembly;

FIGS. **11**C–E are detailed top views of an adult or pediatric sensor optical assembly;

FIG. **11**C shows an optical assembly without the emitter installed;

FIG. **11**D shows an optical assembly with pediatric detector-emitter spacing; and

FIG. **11**E shows an optical assembly with adult detector-emitter spacing; and

FIGS. **12**A–B are exploded perspective views of multiple neonate sensor and adult sensor assemblies, respectively, showing base stock and face stock installation.

DETAILED DESCRIPTION OF THE PREFERRED EMBODIMENT

FIGS. **4**A–C illustrate a low noise optical housing **400** having a protruding cover **410**, a generally flat flange **420** disposed around the periphery of the cover **410**, and a generally flat base **460** adjoining the flange **420**. The housing **400** is configured to accept a detector **820** (FIGS. **6**A–B) and provide ambient light and piped light reduction. In particular, the low noise optical housing **400** advantageously incorporates the functions of a light barrier, opaque cover, spacer and aperture, as described with respect to FIG. **3**, above, in a relatively small, easy to manufacture, one-piece design.

As shown in FIGS. **4**B–C, the housing **400** is advantageously constructed of a flat substrate which, in one embodiment, is a laminate of two materials including an outer white layer **407** and an inner black layer **408**. By utilizing a laminate of both white and black material, the low noise optical housing **400** advantageously functions both as a light absorber and as a light reflector. The white layer **407** acts as a reflector, reflecting unwanted ambient light outward from a detector enclosed in the housing, as described below, as well as reflecting emitter source light back into a patient tissue site. The reflected ambient light reduces noise and the reflected source light increases the sensor current transfer ratio. The black layer **408** absorbs unwanted ambient light, preventing it from reaching the enclosed detector **820** (FIGS. **6**A–B). The two materials **407**, **408** are laminated together before the housing **400** is formed and shaped. The housing **400** is vacuum formed on a flat blank of the laminated material to create a cover **410**, as described below. The housing **400**, aperture **470** and slot **480**, as described below, are then punched out and the housing **400** is removed from the remainder of the laminated material.

In an alternative embodiment, the housing **400** is formed from a black substrate, which is painted white on the outside, i.e. the side corresponding to the outer white layer **407**, or otherwise coated on the outside with a reflecting material or substance. In another alternative embodiment, the housing **400** is formed from a white substrate, which is painted black on the inside, i.e. the side corresponding to the inner black layer **408**, or otherwise coated on the inside with an absorbing material or substance.

As shown in FIGS. **4**A–C, the cover **410** has a ramp **412** sloping from the flange **420** to a generally level platform **414** raised above the flange **420**. The cover **410** also has beveled sides **418** and a beveled back **419** that slope from the flange **420** inward to the platform **414**. The cover **410** defines an pocket **440** for securing a detector **820** (FIGS. **6**A–B), as described below. The flange **420** has indents **422** that gradually taper from the wider flange width **502** (FIG. **5**A) to that of the narrower base width **503** (FIG. **5**A).

Also shown in FIGS. **4**A–C, the base **460** defines a generally centered aperture **470** and a slot **480** proximate the flange **420**, partially extending across the base width **503** (FIG. **5**A). In a closed position, as described with respect to FIGS. **5**C–D, below, the base **460** provides a bottom for the cover **410** and pocket **440** and optically shields the detector **820** (FIGS. **6**A–B). The base **460** also provides a spacer and

MASIMO 2042
Apple v. Masimo
IPR2024-00296

aperture to reduce light piping. The slot **480** allows the base **460** to be easily folded so that the aperture **470** is in proper alignment with the detector active area. Further, the narrower base width **503** (FIG. **5**A) allows the flange **420** to overlap the base **460** in the closed position **560** (FIGS. **5**C–D) so as to seal the housing edges from ambient light. The flange **420** also provides structure for attaching the housing **400** to a tape stock layer (FIGS. **12**A–B).

FIGS. **5**A–D illustrate the housing **400** in an open position **510** (FIGS. **5**A–B) and a closed position **560** (FIGS. **5**C–D). As shown in FIGS. **5**A–B, in an open position **510** the housing **400** has an overall length **501**, a flange width **502**, a base width **503** and a thickness **504**. The flange width **502** is greater than the base width **503**. In one embodiment, the housing length **501** is less than about 1.1 inches, the flange width **502** is less than about 0.4 inches and the housing thickness **504** is less than about 0.015 inches. As shown in FIGS. **5**A–D, from an open position **510**, the housing **400** is folded to the closed position **560** along the slot **480** and across the base width **503** proximate to each indent **422**. In the closed position **560**, the housing **400** provides an optical enclosure for a detector, as described with respect to FIGS. **6**A–B, below.

FIGS. **6**A–B illustrate shielded detector assemblies **1000** incorporating flat aperture **400** and raised aperture **600** embodiments, respectively, of a low noise optical housing. A detector **820** is enclosed in the optical housing **400**, **600** so that the active area of the photodiode chip **821** is aligned with the housing aperture **470**, **670**. An EMI shield **1010**, described with respect to FIGS. **10**A–C, below, also encloses the detector **820**, and a corresponding flexible circuit assembly **801**, described with respect to FIGS. **8**–**9**, below, exits the housing **400**, **600** between the base **460**, **660** and the flange **420**, **620**. As shown in FIG. **6**B, the raised aperture housing **600** includes a raised aperture portion **662** that extends from the plane of the base **660** so as to advantageously provide a larger spacing between the detector **820** and a tissue site, further reducing the effects of light piping.

FIGS. **7**A–B illustrate an assembled pulse oximetry neonate sensor **700**. The sensor **700** includes an optical end **701**, an elongated body **703** and a connector end **705**. The optical end **701** incorporates a detector assembly **1000** (FIGS. **10**A–C), described below, including a low noise optical housing **400** (FIGS. **6**A–B), as described above. The body **703** includes signal traces (not visible) between the optical end **701** and the connector end **705**. The connector end **705** has a plug portion configured to insert into a mating patient cable connector so as to mechanically and electrically connect the sensor **700** to a patient cable **140** (FIG. **1**), for example. A patient cable connector is described in U.S. Pat. No. 6,152,754 entitled "Circuit Board Based Cable Connector," which is assigned to Masimo Corporation, Irvine, Calif. and incorporated by reference herein.

FIG. **7**C illustrates an assembled pulse oximetry adult sensor **750**. The sensor **750** includes an end wrap **751**, a body **753** including an optical section **754**, a middle wrap **755**, and a connector end **759**. The optical section **754** incorporates a detector assembly **1000** similar in construction to that described in FIGS. **10**A–C, below, including a low noise optical housing **400** (FIGS. **6**A–B), as described above. The sensor **750** includes signal traces (not visible) between the optical section **754** and the connector end **759**. The connector end **759** is similar to that described with respect to FIGS. **7**A–B, above. A pulse oximetry adult sensor having end and middle wraps and an electromagnetic interference (EMI) shield is described in U.S. patent application Ser. No. 10/137,942, filed May 2, 2002, entitled "Flex Circuit Shielded Optical Sensor," assigned to Masimo Corporation, Irvine, Calif. and incorporated by reference herein.

FIGS. **8**–**12** illustrate assembly of a neonate sensor **700** (FIGS. **7**A–B) and an adult sensor **750** (FIG. **7**C) including component attachment (FIGS. **8**A–B), detector EMI shielding and optical shielding (FIGS. **9**–**11**), and tape stock assembly (FIGS. **12**A–B). FIG. **8**A illustrates a neonate sensor circuit assembly **800** including multiple, duplicate flexible circuit assemblies **801** each having a flexible circuit substrate **810** and associated components soldered or otherwise electrically connected to the flexible circuit substrate **810**, as is well known in the art. Each flexible circuit assembly **801** includes a detector **820** and an emitter **830**. The detector **820** is enclosed in an EMI shield **1010**, described in further detail with respect to FIGS. **10**A–C, below. The emitter **830** is connected to a pad **1110** having multiple contact sets, described in further detail with respect to FIG. **11**A, below. Each assembly **801** may also include an information element **840**, which can be read by an attached pulse oximeter **160** (FIG. **1**). The information element **840** may provide information regarding the sensor **700**, such as sensor type or manufacturer to name a few. An information element is described in U.S. Pat. No. 6,397,091, entitled "Manual and Automatic Probe Calibration," assigned to Masimo Corporation, Irvine, Calif. and incorporated by reference herein.

FIG. **8**B illustrates an adult sensor circuit assembly **850** likewise including multiple, duplicate flexible circuit assemblies **851** each having a flexible circuit substrate **860** and associated components soldered or otherwise electrically connected to the flexible circuit substrate **860**, including a detector **820**, an emitter **830** and maybe an information element **840**, such as described with respect to FIG. **8**A, above. The detector **820** is enclosed in an EMI shield **1010**, such as described with respect to FIGS. **10**A–C, below. In one embodiment, the emitter **830** is connected to a pad **1160** (FIGS. **11**C–E) having extended contacts, as described below.

FIGS. **9**A–B illustrate a neonate sensor assembly **900** having a flexible circuit assembly **801**, a low noise optical housing **400** and a connector tab **910**. The sensor assembly **900** is configured as an optical portion **1100**, which is described in further detail with respect to FIGS. **11**A–B, below, and a connector portion **901**. The optical portion **1100** has an emitter **830** and a shielded detector assembly **1000**, described in further detail with respect to FIGS. **10**A–C. The connector portion **901** is configured with the connector tab **910** supporting sensor pinouts **920**.

FIGS. **9**C–D illustrate an adult sensor assembly **950** having a flexible circuit assembly **851**, a low noise optical housing **400** and a connector tab **910**. The sensor assembly **950** is configured as an optical portion **1150**, described in further detail with respect to FIGS. **11**C–E, below, and a connector portion **901**, as described above. The optical portion **1150** has an emitter **830** and a shielded detector assembly **1000**, such as is described in detail with respect to FIGS. **10**A–C.

FIGS. **10**A–C illustrate a shielded detector assembly **1000** configured for the neonate flexible circuit assembly **801** (FIGS. **8**A, **9**A–B) as shown, or, similarly, for the adult flexible circuit assembly **851** (FIGS. **8**B, **9**C–D). As shown in FIG. **10**A, inside pressure sensitive adhesive (PSA) **1020** and top PSA **1030** are removed from a foldable shield **1010**, and bottom PSA **1040** is removed from a fixed shield **1005** (not visible). As shown in FIG. **10**B, the shield **1010** is next folded toward the detector **820**. As shown in FIG. **10**C, the shield **1010** is then folded over the back and sides of the

detector **820**, enclosing the detector **820**. The inside PSA **1020** adheres to the detector **820**, maintaining the foldable shield **1010** in place. Next, the EMI shielded detector **820** is placed into the optical housing **400**. The top PSA **1030** adheres to the inside surface of the optical housing **400**, which defines a pocket **440** (FIGS. **4**B–C) as described above. The bottom PSA **1040** adheres to the optical housing base **410** (FIGS. **4**A–C), maintaining the detector **820** in place within the optical housing cover **410** (FIGS. **4**A–C), aligned with the aperture **470** (FIG. **4**A), and maintaining the optical housing **400** in the closed position **560** (FIGS. **5**C–D).

FIGS. **11**A–B illustrate one embodiment of the optical portion **1100** of a sensor assembly **900** (FIGS. **9**A–B) having a detector assembly **1000** and an emitter **830** connected to a pad **1110**. As shown in FIG. **11**A, a particular embodiment of the pad **1110** advantageously has an inner contact set **1112** and an outer contact set **1114**. The emitter **830** may be attached and electrically connected in a first position to the inner contact set **1112** or in a second position to the outer contact set **1114**. As shown in FIG. **11**B, this advantageously provides two different detector-emitter spacings **1131**, **1132** on the same flexible circuit substrate. A comparatively wider spacing **1131** corresponds to the second emitter position attached to the outer contact set **1114** (shown), and a comparatively narrower spacing **1132** corresponds to the first emitter position attached to the inner contact set **1112** (not shown). The choice of mounting the emitter with a narrower or wider spacing accommodates different sensor types for different sized patients or different tissue site thicknesses with fewer unique sensor parts or subassemblies. Note that the detector **820** (FIGS. **10**A–B) is not visible in FIG. **11**B as it is behind the fixed shield **1005**. As an example, a neonate sensor **700** (FIGS. **7**A–B) and an infant sensor (not illustrated) configured for different sized foot sites may be manufactured from a single flex circuit part. In a preferred embodiment, the inner pads are configured for a 20 mm detector-emitter spacing appropriate for a neonate, such as a child weighing under 3 kg and the outer pads **1114** are configured for a 25 mm detector-emitter spacing appropriate for an infant, such as a child weighing 3–10 kg.

In another embodiment of the optical portion **1100**, a reinforcing tape (not shown) is applied to the component side (shown in FIG. **11**A) of the flexible circuit between the detector assembly **1000** and the emitter **830** so as to increase the number of bend cycles before failure of that flexible circuit area and to improve electrostatic discharge (ESD) resistance. The reinforcing tape is disposed over at least the extent of the pad **1110**. In a particular embodiment, the reinforcing tape is 0.004 inch polypropylene.

FIGS. **11**C–E illustrate one embodiment of the optical portion **1150** of a sensor assembly **950**.(FIGS. **9**C–D) having a detector assembly **1000** and an emitter **830** connected to a pad **1160** having extended contacts. The contacts are extended along the direction between the detector assembly **1000** and the emitter **830**, allowing the emitter to be mounted on the same pad **1160** in multiple positions. As shown in FIG. **11**C, the emitter **830** is installed over an elongated aperture **1170**. The extended pad area **1160** advantageously provides for different detector-emitter spacings **1181**, **1182** (FIGS. **11**D–E) on the same flexible circuit substrate. A comparatively narrower spacing **1181** corresponds to a first emitter position (FIG. **11**D), and a comparatively wider spacing **1182** corresponds to a second emitter position (FIG. **11**E). This accommodates different sensor types for different sized patients or different tissue site thicknesses with fewer unique sensor parts or subassemblies. As an example, an adult sensor **750** (FIGS. **7**C) and a pediatric sensor (not shown) configured for different sized finger sites may be manufactured from a single flex circuit part. As shown in FIGS. **11**D–E, in a preferred embodiment, the pad **1160** (FIG. **11**C) is configured with contacts that are extended at least 0.1 inches beyond an emitter **830** nominal lead length so as to accommodate a 1.0 inch detector-emitter spacing **1181** appropriate for a pediatric sensor or a 1.1 inch detector-emitter spacing **1182** appropriate for an adult sensor. The elongated aperture **1170** (FIG. **11**C) is configured accordingly, i.e. is elongated from a circular aperture sufficiently to accommodate either a 1.0 inch or a 1.1 inch detector-emitter spacing.

The ability to adjust the detector-emitter spacing on a particular flexible circuit so as to minimize the number of unique parts in manufacturing various sensor types and sizes is disclosed above. That disclosure is with respect to a pad **1110** (FIG. **11**A) having multiple contact sets and a pad **1160** (FIG. **11**C) having extended contacts with an associated elongated aperture **1170** (FIG. **11**C). One of ordinary skill in the art will recognize other electrical and mechanical structures that allow such detector-emitter spacing adjustment. For example, although adjustment of the emitter **830** location relative to the detector **820** is achieved by the above-disclosed embodiments, adjustment of the detector **820** location relative to the emitter **830** may be achieved with similar structures. Further, adjustment of the detector-emitter spacing may also be achieved by altering the orientation of the detector **820** and/or the emitter **830**. These adjustments may also be accommodated by multiple apertures rather than an elongated aperture. Although the sensors disclosed are based upon the detection of light transmitted through a tissue site, the ability to adjust detector-emitter spacing is equally applicable to reflectance sensors, i.e. sensors that are based upon the detection of light reflected from a tissue site.

FIG. **12**A illustrates a tape stock assembly **1200** for a neonate sensor. In particular, multiple sensor assemblies **900** are sandwiched between a base stock **1210** and a face stock **1220**. Individual completed sensors **700** (FIGS. **7**A–B) are then cut from the tape stock assembly **1200**. A base stock and a face stock are described in U.S. Pat. No. 5,782,757, cited above.

FIG. **12**B illustrates a tape stock assembly **1250** for an adult sensor. In particular, multiple sensor assemblies **950** are sandwiched between a base stock **1210** and a face stock **1220**. Individual completed sensors **750** (FIGS. **7**C) are then cut from the tape stock assembly **1250**.

The low noise optical housing has been disclosed in detail in connection with various embodiments. These embodiments are disclosed by way of examples only and are not to limit the scope of the claims that follow. One of ordinary skill in the art will appreciate many variations and modifications.

Additionally, all publications, patents, and patent applications mentioned in this specification are herein incorporated by reference to the same extent as if each individual publication, patent, or patent application was specifically and individually indicated to be incorporated by reference.

What is claimed is:

1. A sensor circuit comprising:

a circuit substrate;

a pair of pads disposed on an optical portion of said circuit substrate;

a plurality of pinouts disposed on a connector portion of said circuit substrate; and

a plurality of conductive paths providing electrical communication between said pads and said pinouts,

said pads configured to mechanically mount a corresponding pair of optical components to said circuit substrate and to electrically connect said components to said conductive paths,

at least one of said pads adapted to mount one of said components at either a first spacing or a second spacing from the other one of said components,

said first and second spacings corresponding to particular sensor types, and

said second spacing being greater than said first spacing by a predetermined amount.

2. The sensor circuit according to claim **1** wherein said at least one of said pads comprises a plurality of extended contacts providing a first attachment position corresponding to said first spacing and a second attachment position corresponding to said second spacing.

3. The sensor circuit according to claim **1** wherein said at least one of said pads comprises a first contact set of contacts corresponding to said first spacing and a second contact set corresponding to said second spacing, said first contact set and said second contact set being electrically connected in parallel.

4. The sensor circuit according to claim **1** further comprising an elongated aperture defined by said substrate and adapted to transmit light through said substrate for said one of said components mounted at either said first spacing or said second spacing.

5. The sensor circuit according to claim **1** wherein said first spacing is about 20 mm and said second spacing is about 25 mm.

6. The sensor circuit according to claim **1** wherein said first spacing is about 1.0 inch and said second spacing is about 1.1 inch.

7. A sensor circuit comprising:

a flexible circuit substrate;

a first pad disposed on said substrate and configured to mount a detector; and

a second pad disposed on said substrate and configured to mount an emitter,

at least one of said first pad and said second pad adapted so that a detector-emitter spacing is a first distance or a second distance depending on the placement of at least one of said detector and said emitter,

said first distance and said second distance predetermined and corresponding to particular sensor types.

8. The sensor circuit according to claim **7** wherein:

said second pad comprises a first contact set and a second contact set,

said emitter mountable to said first contact set said first distance from said detector mounted to said first pad, and

said emitter mountable to said second contact set said second distance from said detector mounted to said first pad.

9. The sensor circuit according to claim **7** wherein:

said second pad comprises a plurality of extended contacts,

said emitter mountable to said contacts in a first position located a first distance from said detector mounted to said first pad, and

said emitter mountable to said contacts in a second position located a second distance from said detector mounted to said first pad.

10. The sensor circuit according to claim **9** further comprising an elongated aperture configured so that light is transmitted from said emitter through said aperture when said emitter is mounted in either said first position or said second position.

11. The sensor circuit according to claim **7** wherein said sensor types comprise a neonate sensor and an infant sensor, said first distance and said second distance in the range of about 20 mm to about 25 mm.

12. The sensor circuit according to claim **7** wherein said sensor types comprise a pediatric sensor and an adult sensor, said first distance and said second distance in the range of about 1.0 in. to about 1.1 in.

13. A sensor circuit method comprising the steps of:

predetermining a plurality of optical component spacings based upon a corresponding plurality of sensor types, said sensor types indicative of tissue site location and patient size;

configuring a pad to fixedly mount and electrically connect an optical component to a flexible circuit at a plurality of positions, said positions corresponding to said spacings; and

mounting said optical component to a particular one of said positions to construct a particular one of said sensor types.

14. The sensor circuit method according to claim **13** comprising the further step of adapting at least one aperture defined by said flexible circuit so as to pass light for said optical component mounted at any of said positions.

15. The sensor circuit method according to claim **13** wherein said configuring step comprises the substep of constructing a plurality of contact sets electrically connected in parallel, each of said sets providing a corresponding one of said positions.

16. The sensor circuit method according to claim **13** wherein said configuring step comprises the substep of providing a plurality of contacts extending from said optical component so that said optical component is mountable to said contacts in each of said positions.

* * * * *

UNITED STATES PATENT AND TRADEMARK OFFICE

CERTIFICATE OF CORRECTION

PATENT NO. : 7,096,054 B2
APPLICATION NO. : 10/632012
DATED : August 22, 2006
INVENTOR(S) : Abdul-Hafiz et al.

It is certified that error appears in the above-identified patent and that said Letters Patent is hereby corrected as shown below:

Sheet 16 of 17, Fig. 12A, below "Figure" delete "FIG 12A" and insert -- FIG. 12A --, therefore.

At column 2, line 25, delete "a the" and insert -- a detector within the --, therefore.

At column 2, line 49, delete "mount." and insert -- amount. --, therefore.

At column 2, line 50, delete "comprisesa" and insert -- comprises a --, therefore.

At column 3, line 35 (Approx.), after "top" delete "a**ri**d" and insert -- a**n**d --, therefore.

At column 4, line 2, after "spacing;" delete "and".

At column 4, line 56, after "defines" delete "an" and insert -- a --, therefore.

At column 7, line 53, delete "950.(FIGS." and insert --.950 (FIGS. --, therefore.

At column 8, line 2, after "750" delete "(FIGS." and insert -- (FIG. --, therefore.

At column 8, line 48, after "750" delete "(FIGS." and insert -- (FIG. --, therefore.

Signed and Sealed this

Nineteenth Day of June, 2007

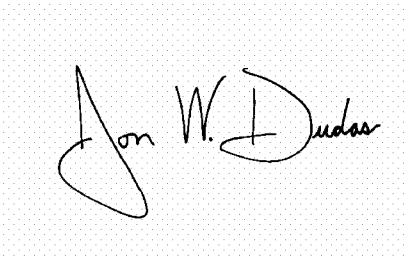

JON W. DUDAS
Director of the United States Patent and Trademark Office