SPI Plastics Engineering Handbook

of the Society of the Plastics Industry, Inc.

Fifth Edition

Edited by

Michael L. Berins

IPR2024-00299
Nespresso USA, Inc. Ex. 1029
Page 1 of 57

VNR VAN NOSTRAND REINHOLD
New York

Copyright © 1991 by Van Nostrand Reinhold

Library of Congress Catalog Card Number: 90-22784
ISBN: 0-442-31799-9

All rights reserved. No part of this work covered by the copyright hereon may be reproduced or used in any form or by any means – graphic, electronic, or mechanical, including photocopying, recording, taping, or information storage and retrieval systems – without written permission of the publisher.

Manufactured in the United States of America

Published by Van Nostrand Reinhold
115 Fifth Avenue
New York, New York 10003

Chapman & Hall
2-6 Boundary Row
London SE1 8HN, England

Thomas Nelson Australia
102 Dodds Street
South Melbourne, Victoria 3205, Australia

Nelson Canada
1120 Birchmount Road
Scarborough, Ontario M1K 5G4, Canada

15 14 13 12 11 10 9 8 7 6 5 4 3 2 1

Library of Congress Cataloging in Publication Data

Society of the Plastics Industry.
Plastics Engineering Handbook of the Society of the Plastics Industry/[edited by] Michael L. Berins.—5th ed.
p. cm.
Includes index.
ISBN 0-442-31799-9
1. Plastics—Handbooks, manuals, etc. I. Berins, Michael L. II. Title.
TP1130.S58 1991
668.4—dc20 90-22784
CIP

IPR2024-00299
Nespresso USA, Inc. Ex. 1029
Page 2 of 57

EMS
LIB
TP
1130
S65
1991

Foreword

I am pleased to present the Fifth Edition of the *Plastics Engineering Handbook*. Last published in 1976, this version of the standard industry reference on plastics processing incorporates the numerous revisions and additions necessitated by 14 years of activity in a dynamic industry.

At that last printing, then-SPI President Ralph L. Harding, Jr. anticipated that plastics production would top 26 billion pounds in 1976 (up from 1.25 billion in 1947, when the First Edition of this book was issued). As I write, plastics production in the United States had reached almost 60 billion pounds annually.

Indeed, the story of the U.S. plastics industry always has been one of phenomenal growth and unparalleled innovation. While these factors make compilation of a book such as this difficult, they also make it necessary. Thus I acknowledge all those who worked to gather and relate the information included in this 1991 edition and thank them for the effort it took to make the *Plastics Engineering Handbook* a definitive source and invaluable tool for our industry.

Larry L. Thomas
President
The Society of the Plastics Industry, Inc.

IPR2024-00299
Nespresso USA, Inc. Ex. 1029
Page 3 of 57

Preface

In this fifth edition of the *SPI Plastics Engineering Handbook*, we continue a tradition of providing readers with a comprehensive manual for plastics processing. Since the last edition was published in 1976, there have been many changes in the types of materials available for manufacturing plastic products. Likewise, there have been new processes introduced and substantial improvements in those that already existed. All in all, the plastics processing industry has become much more sophisticated than it was in the 1970s, making use of higher-performance materials and computer-controlled equipment to widen the range of applications for both thermoplastics and thermosets.

Extensive revisions have resulted in an up-to-date handbook that reflects the plastics industry's state of the art. Some changes in chapter order have been made to guide the reader through the maze of processes for these versatile materials. For example, the Extrusion chapter now precedes the other chapters on thermoplastic processing because extrusion is generic to most of them.

Chapter 1 provides a glossary of words and current expressions in use in the plastics industry. Specialized glossaries with illustrations are placed at the end of the chapters on extrusion and injection molding.

Chapters 2 and 3 cover the range of polymer materials in use in today's industry. The first provides an understanding of the basic chemistry of polymers; the second supplies a description of the families of plastics, their physical and chemical properties, and a brief discussion of the applications for which they are suited. The information has been updated to include descriptions of the newest, high-temperature plastics, e.g., liquid crystal polymers.

Chapters 4 through 20 are devoted to the most widely used methods of plastics processing. The chapter on extrusion has been completely rewritten and provides a thorough understanding of the theory and practice of melting and conveying thermoplastics. For easier reference, the three chapters on injection molding and tooling have been placed in sequence in the new edition. Coverage of blow molding has been expanded considerably to include discussions of new technologies such as injection stretch blow molding. The chapter on thermoforming has also been extensively revised to reflect the many changes in this ever more versatile processing method.

For each process, the *Handbook* covers all aspects of the technology: machinery and equipment, tooling, materials, process variables, and, in some cases, troubleshooting techniques.

Chapters 18 and 19, instead of concentrating on a single processing method, furnish a comprehensive presentation of the materials and methods used in two major industry segments. Chapter 18, on reinforced plastics, covers the full range of composite materials and manufacturing processes that are widely used in making products for automotive, aircraft and aerospace, marine, and construction applications. Chapter 19, on cellular plastics, covers both thermoset and ther-

IPR2024-00299
Nespresso USA, Inc. Ex. 1029
Page 4 of 57

moplastic foams as well as such new techniques as structural reaction injection molding, resin transfer molding, and gas-assisted injection molding.

Chapter 20, on radiation processing, begins the *Handbook*'s coverage of secondary processing techniques. Chapter 21 is devoted to descriptions of equipment for handling incoming raw materials, their distribution to individual processing machines, and for handling finished parts and scrap. Chapter 22 discusses preparation of the raw materials for processing.

In Chapters 23 through 26, the *Handbook* moves to secondary operations, with coverage of machining, assembly, and decorating.

Finally, in Chapter 27, there is a presentation of accepted testing methods for plastic materials and manufactured products.

The last portion of the *Handbook* is probably the most used section. Special attention has been paid to the index for the Fifth Edition to help the reader easily locate the information he or she needs.

IPR2024-00299
Nespresso USA, Inc. Ex. 1029
Page 5 of 57

Acknowledgments

In preparing this Fifth Edition of the *SPI Plastics Engineering Handbook*, we have built upon a base of information that has grown along with the plastics industry over the past 45 years.

As a work whose contents are largely contributed, the *Handbook* owes a great deal to the authors and reviewers whose time and efforts went into its publication. They all have our sincere appreciation.

In compiling the new work, much text from the previous edition has been retained, with the necessary revisions and updates provided by current industry experts. We therefore thank all the contributors and reviewers who participated in the Fourth Edition as well.

Acknowledgment is due once again to the many suppliers of plastic materials and processing equipment who have generously offered literature and illustrations. We have provided credit for those contributions throughout the handbook.

Thanks are also in order to the Society of the Plastics Industry, which supported the publication of the Handbook and supplied us with association literature, data, standards, and other information contained in this volume.

I would also like to give special thanks to Joel Frados, editor of the Fourth Edition and my mentor in the plastics publishing business, to Mel Friedman and Ed Galli of Edgell Communications for their help in gathering information, to Stephanie Seber for her long hours of manuscript preparation, to Emil Davidson for his inspiration and assistance, and to Tina Berins for her constant encouragement.

MICHAEL L. BERINS, *Editor*

IPR2024-00299
Nespresso USA, Inc. Ex. 1029
Page 6 of 57

Contents

Foreword, by Larry L. Thomas / **v**

Preface / vii

1 Glossary / 1

2 Polymer Chemistry / 33

Forming Polymers / 33 Polymerization Techniques / 34 Weight, Size, and Distribution of Molecules / 37 Polymer Structure / 38 Effect of Time and Temperature / 39 Chemical Composition / 40

3 Plastic Materials/Properties and Applications / 47

The Family of Plastics / 47 **Thermoplastic Resins / 51** The Polyolefins / 51 Styrenic Plastics / 55 Vinyl Plastics / 58 Other Thermoplastics / 59 Engineering Thermoplastics / 61 Thermoplastic Elastomers (TPEs) / 72 Alloys and Blends / 73 **Thermosetting Resins / 74** Alkyds / 74 Allylics / 74 Bismaleimides (BMI) / 75 Epoxies / 75 Melamines / 76 Phenolics / 76 Polyesters / 77 Polyimides / 77 Silicones / 78 Ureas / 78 Polyurethanes / 78

4 Extrusion Processes / 79

Extrusion Concepts / 79 **Single Screw Functional Description / 80** Feeding and Solids Conveying / 81 Melting Considerations / 84 Melt Pumping / 86 Wear Effects on Pumping / 87 Mixing / 87 Devolatilizing (Venting) / 88 Effects of Extruder Accessories / 88 **Twin Screw Vs. Single Screw Operation / 91** **Single Screw Extruder Physical Description / 92** Barrels / 92 Heating/Cooling Systems / 93 Screws / 96 Thrust Bearings / 97 Gear Case / 97 Drive Motor / 98 Drive Coupling / 98 **Extrusion Controls and Instrumentation / 98** Basic Control Requirements / 98 Sensors and Monitors / 99 Temperature Control / 100 Pressure Control / 101 Melt Temperature Control / 101 Size Controls / 101 Rate Controls / 102 **Extrusion Processes / 102** Blown Film / 102 Sheet, Extrusion Coating, and Cast Film / 105 Profile and Pipe / 108 Wire and Cable / 109 Fiber / 119 **Extruder Screws / 119** Extruder Screws (General) / 119 Screw Types / 121 Screw Cooling / 126 Mixing Considerations and Mixing Devices / 126 Scaling Screw Design and Extruder Performance / 128 **Glossary of Extrusion Terms / 128**

IPR2024-00299
Nespresso USA, Inc. Ex. 1029
Page 7 of 57

5 Injection Molding of Plastics / 133

Overview / 133 Injection Ends / 133 Melting a Plastic in a Screw / 139 Clamping Ends / 144 Circuits / 148 Automation / 148 Material Handling / 148 Secondary Operations / 149 Safety / 149 Coloring / 149 Multicylinder Machines / 150 **Theory of Injection Molding / 150** Properties of Linear and Branched Materials / 153 Crystallinity / 154 Flow Properties / 155 Orientation / 158 Shrinkage / 160 **Correcting Molding Faults / 161** **Process Control / 163** On-Machine Monitoring / 163 Temperature Control of Barrel and Melt / 165 PID Injection Pressure Control / 168 Relating Process Control to Product Performance / 169 Molding Parameters / 170 Display of Monitored Molding Parameters / 171 Machine Control / 172 Adaptive Ram Programmer / 173 Microprocessor Advantages / 173 **Glossary of Injection Molding Terms / 174**

6 Design Considerations for Injection Molds / 179

Mold Design Features / 180 Two-Plate Mold / 180 Three-Plate Mold / 180 Hot Runner Molds / 181 Insulated Runner Molds / 183 Runners / 184 Gates / 184 Moldmaking / 185 Venting / 186 Parting Line / 186 Ejection / 186 Ejector Mechanisms / 189 Ejector Sleeve / 189 Stripper Ring / 189 Stripper Plates / 189 Vent Pins / 189 Cam Actions / 190 Early Ejector Return Unit / 193 **Mold Cooling / 193** **Standard Equipment / 197** Standard Mold Bases / 197 Standard Cavity Inserts / 199

7 Injection Mold Manufacturing / 201

The Moldmaker / 201 **Design and Consideration / 201** Number of Cavities / 201 Machine Size / 202 Plasticizing Capacity / 202 Economics / 202 Specifications / 202 Features / 203 Mold Quotations / 203 Delivery Time / 203 Placement / 203 Responsibilities / 203 Standard Mold Bases / 204 Mold Plates / 204 Mold Base Nomenclature / 204 "A" Series Mold Bases / 205 Mold Base Stainless Steel / 206 Window Pockets / 208 Blind Pockets / 208 Cavity Pockets / 208 Wear Plates / 208 Mold Base Machining / 208 Special Mold Bases / 208 Quality of Mold Bases / 209 Mold Base Numbers / 209 Specific-Purpose Mold Bases / 209 "AX" Mold Bases / 209 "T" Series Mold Bases / 209 Mold Base Features / 210 Mold Base Plates / 210 **Types of Molds / 210** Conventional Molds / 210 Three-Plate Molds / 211 Insulated Runner Molds / 212 Internally Heated Runnerless Molding Systems / 212 Externally Heated Runnerless Molding Systems / 214 Runnerless Molding Nozzles / 215 Valve-Gate Runnerless Molding Systems / 215 **Fabrication of Components / 216** Cavity Machining / 216 Core and Cavity / 219 Electric-Discharge Machining / 220 Slide and Unscrewing Devices / 220 Collapsible Cores / 221 Collapsible Core Sequence / 221 Mold Components / 221 Interlocks / 221 Return Pins and Springs / 223 Early Ejector Return / 223 External Positive Return System / 225 Hobbing / 225 Cast Cavities / 225 Electroforming / 226 Cavity Finishing / 226 SPI Finish Number / 226 Hand Benching / 226 Tool-Assisted Benching / 226 Direction of Benching / 228 Mold Polishing / 229 Ultrasonic Tools / 229 Textured Cavities / 229 Texture Patterns / 230 Mold Steels / 230 Compression Molds / 230 Transfer Molds / 231 Reaction Injection Molds / 231 Expandable Polystyrene Molds / 231 Structural Foam Molds / 232 Chrome Plating / 232 Electroless Nickel Plating / 232 Nitriding and Carburizing / 232 Proprietary Wear Processes / 232 Mold Steel / 232

8 Injection Molding of Thermosets / 239

Overview / 239 How the Process Operates / 239 **Process and Design Considerations / 243** Materials / 243 Process Effects on Design / 244 Injection-Compression Molding / 245 Part-Design Considerations / 246 **Cold Runner Molding / 246** **Injection Molding Reinforced Polyesters / 247** Injection Molding Presses / 248 Temperature Control / 248

9 Compression and Transfer Molding / 251

Compression Molding / 251 Techniques and Materials / 251 Molding of Phenol-formaldehyde Components / 253 Molding of Urea-formaldehyde and Melamine-formaldehyde Components / 254 Molding of General Purpose Polyester Molding Compounds / 255

IPR2024-00299
Nespresso USA, Inc. Ex. 1029
Page 8 of 57

Molding of Alkyd Materials / 255 Molding of Thermoplastic Materials / 255 Molding of Fluorocarbons / 256 Cold Molding / 257 Advantages of Compression Molding / 257 Limitations of Compression Molding / 258 Procedure for Compression Molding / 258 Types of Compression Molds / 260 Machinery and Equipment / 261 Automatic Compression Molding / 261 Basic Requirements for Automatic Compression Molding / 262 Types of Machines / 264 Preheating in Automatic Compression Molding / 265 **Transfer Molding / 269** History / 269 Utility of Process / 270 Description of Process / 270 Transfer Molds / 274 Advantages of Transfer Molding / 277 Limitations of the Process / 279 Comparison between Compression and Transfer Molding / 280 Theoretical and Design Considerations / 282 Liquid Resin Molding / 287

10 Designing Molds for Thermoset Processing / 289

Method of Molding / 289 Compression Molds / 289 Transfer Molds / 295 Injection Molding of Thermosets / 299 Injection-Compression Molding of Thermosets / 299 Runner and Gate Design / 300 Vents / 304 General Mold Design Considerations / 305

11 Molded Part Design / 307

Structural Design Characteristics of Plastics / 307 Mechanical Properties—The Stress-Strain Curve / 307 Effect of Temperature, Loading Time, and Environment / 310 Creep and Relaxation / 311 Design Methods / 313 Designing Within the Modulus Accuracy Limit / 314 Yield Design / 315 **Designing the Part / 315** **Basic Design Theory / 318** Wall Thickness / 318 Fillets and Radii / 322 Ribs / 324 Undercuts / 325 Taper or Draft / 326 Bosses / 327 Holes / 327 External and Internal Threads / 331 Inserts / 332 Parting Lines / 332 Surface Treatment / 333 Molded Lettering / 334 **Avoiding Warpage Problems / 334** Part Design / 335 Mold Design / 335 Molding Conditions / 338 Troubleshooting Guide / 339

12 Blow Molding of Thermoplastics / 341

Extrusion Blow Molding / 342 Process Variables / 343 Die Dimension Calculations / 344 Air Entrance / 346 Parison Variations / 347 Types of Extrusion Blow Molding / 348 Continuous Extrusion / 348 Intermittent Extrusion / 350 Forced Extrusion / 351 Dip Blow Molding / 352 Form/Fill Seal / 352 Coextrusion Blow Molding / 352 Part Trimming and Handling / 352 Neck Calibration / 352 In-Mold Labeling / 354 Materials / 356 **Injection Blow Molding / 357** Design Considerations / 361 Coinjection Blow Molding / 362 **Stretch Blow Molding / 362** Injection Orientation Blow Molding / 370 Coinjection Stretch Blow Molding / 370 **Auxiliary Equipment / 371** **Molds for Extrusion Blow Molding / 371** Injection Blow Molding Cooling / 375 Design and Construction / 375 Principle of Operations / 376 Mold Design / 376 Alignment of Components / 379 Core Rod Design and Construction / 379 Parison Molds / 380 Blow Molds / 382

13 Thermoforming of Plastic Film and Sheet / 383

Overview / 383 **Methods of Thermoforming / 383** Methods of Thermoforming / 383 Vacuum Forming into a Female Mold / 384 Pressure Forming into Female Cavity / 385 Free Forming / 385 Plug-Assist Forming / 385 Drape Forming / 386 Matched Mold Forming / 386 Trapped Sheet / 386 Plug-and-Ring Forming / 391 Ridge Forming / 391 Slip Forming / 391 Snap-Back Forming / 391 Billow-Up Prestretch Techniques / 393 Billow-Up Plug Assist (or Reverse Draw with Plug Assist) / 393 Billow-Up Vacuum Snap-Back / 393 Dual Sheet Forming / 397 **Thermoforming Machines / 398** Single-Stage, Sheet-Fed Machines / 398 Multiple-Stage, Sheet-Fed Machines / 399 In-Line Sheet-Fed Machines / 400 Continuous Roll-Fed Machines / 400 Packaging Machines / 401 **Materials / 402** Plastic Memory / 403 Hot Elongation or Hot Strength / 403 Temperature Range for Forming / 404 Thermoforming Processing Temperatures / 405 **Heating / 406** Temperature Control / 406 **Vacuum/Air Pressure / 408** **Tooling / 409** **Trimming / 410** Problems of Shrinkage / 413 Trimming in the Mold / 413 **Control / 413** Manual Control Equipment / 413 Automation / 413 Control Systems / 414 **Thermoforming of Coextruded Structures and Other Special Materials / 416** **Cooling Requirements of the**

IPR2024-00299
Nespresso USA, Inc. Ex. 1029
Page 9 of 57

Thermoforming Process / 416 **Substrate Thermoforming / 418** **Troubleshooting / 419** Checklist for Troubleshooting / 419 Thermoforming Troubleshooting Guide / 419

14 Rotational Molding / 429

Overview / 429 How It Works / 429 **Machinery / 431** Batch-Type Machines / 431 Carousel-Type Machines / 431 Independent-Arm-Type Machines / 432 Straight-Line Machines / 432 Jacketed-Mold Machines / 432 **Molds / 433** **Materials / 436** **Part Design / 437**

15 Calendering / 441

Blending / 441 Scrap and Cold Trim / 442 Mills and Strainers / 443 Calender / 443 Take-Off Stripper Section / 445 Embosser / 445 Winder / 446 Trends / 446

16 Vinyl Dispersions / 447

Overview / 447 Historical / 447 Resins / 448 Rheology / 449 Fusion / 450 Formulating Vinyl Plastisols / 451 Dispersion and Blending Resins / 451 Plasticizers / 454 Stabilization / 457 Thinners / 457 Fillers / 458 Pigment / 458 Specialty Ingredients / 459 Plastisol Preparation / 460 Property Determination / 464 **Spread Coating Processes and Applications / 468** Spread Coating / 468 Knife Coating / 468 Roll Coating / 471 Fusion / 472 Web Handling and Finishing / 475 Fabric Coating / 475 Coating Paper and Nonwoven Materials / 477 Film Casting / 478 Spread Coating Metal Substrates / 479 Miscellaneous Coating Applications / 481 **Molding / 482** Dip Coating and Dip Molding / 482 Hot Dipping Process / 484 Cold Dripping Process / 485 Rotational Molding / 485 Slush Molding / 491 Cavity, In-Place, and Low-Pressure Molding / 492 **Specialized Processes / 493** Strand Coating / 493 Spray Coating / 494 Extrusion / 495 **References / 495**

17 Powder Coatings / 497

Introduction / 497 **Manufacturing Methods / 497** Dry Blend / 498 Melt Mix / 498 Solution / 500 **Application Methods / 500** Fluidized Bed / 500 Electrostatic Spraying / 501 Friction Static Spraying / 502 Electrostatic Fluidized Bed / 502 **Powder Coating Types / 502** Thermoplastic Types / 502 Thermosetting Types / 504 **The Application Line / 507** **Economics / 507**

18 Reinforced Plastics and Composites / 511

Overview / 511 A Brief History / 511 Terminology / 512 Thermosetting Plastics / 513 Thermoplastics / 514 Fillers and Additives / 514 Reinforcements / 514 Preforms, Compounds, and Prepregs / 516 **Processes / 518** Open (or contact) Molding / 519 Compression Molding / 520 Injection Molding / 521 Reactive and Resin Transfer Molding / 522 Continuous Processes / 523 Other Molding Processes / 524 **Features and Benefits / 525** **Markets and Applications / 529** **Design Review / 533** Designing for Closed Mold Processes / 536 Fastening, Welding, Bonding / 537 Designing for Hand Lay-Up / 538 Designing for Spray-Up / 539 **Conclusion / 540**

19 Cellular Plastics / 541

Overview / 541 History / 542 **Chemical Blowing Agents / 543** Choice of Blowing Gas / 544 References / 551 **Polyurethane Foams / 552** Chemistry / 552 Polyols and Polyisocyanates / 553 Modifiers and Additives / 553 One-Shots and Prepolymers / 554 Rigid Polyurethane and Polyisocyanurate Foam / 554 Processing Rigid Polyurethane Foam / 555 Flexible Polyurethane Foams / 556 Processing Flexible Polyurethane Foam / 557 Semirigid Foams / 558 **Reaction Injection Molding / 559** Introduction / 559 The Process / 560 Materials / 561 Equipment / 563 The Mold / 566 Mold Gating / 566 Part Design / 567 Applications / 568 **Polyurethane Processing Equipment / 569** Equipment for Spray Applications / 569 Equipment for Pour-in-Place Applications / 570 Equipment for Molding Applications / 571 Equipment for the Production of Slab Foam / 571 Equipment for Cast

IPR2024-00299
Nespresso USA, Inc. Ex. 1029
Page 10 of 57

Elastomer Applications / 572 Accessory Items / 574 **Thermoplastic Structural Foams / 576** History / 576 Properties of Structural Foams / 577 Combustibility / 577 Making Structural Foams / 577 Process Details / 580 Tooling / 584 Designing With Structural Foam / 585 Mechanical Properties / 586 Finishing / 588 Foam Extrusion / 589 **Gas-Assisted Injection Molding / 590** General Design Considerations / 593 Applications / 593 **Polystyrene Foams / 593** Extruded Polystyrene Foam / 593 Molded Bead Polystyrene Foam / 594 Bead Expansion / 594 Molding Shaped Parts / 595 Block Molding / 596 Expanded Polystyrene Sheet / 597 Polystyrene Foam Properties / 597 Applications for Extruded Polystyrene Foam / 597 Applications for Polystyrene Sheet / 598 Applications for Bead Polystyrene Foam / 598 Applications for Loose-Fill Polystyrene Foam / 598 **Cellular Polyethylene / 600** Production / 600 Properties / 601 Applications / 602 **Low Density Polyethylene Foams / 602** Compression Characteristics / 603 Tensile and Tear Strength / 604 Dynamic Cushioning / 604 Water Properties / 604 Thermal Properties / 604 Electrical Properties / 605 Fabrication / 606 Bonding / 606 **PVC Foams / 606** **Ionomer Foams / 607** **Epoxy Foams / 607** **Phenolic Foams / 608** **Silicone Foams / 608**

20 Radiation Processing / 609

Ionizing Radiation / 609 Crosslinking Thermoplastics for Wire and Cable / 609 Cross-Linking Thermoplastics for Packaging Film / 610 Crosslinked Foamed Resins / 611 Graft Copolymers / 611 Radiation Induced Curing of Coatings / 612 Irradiated Wood—Plastic Composites / 612 Irradiated Concrete—Plastic Composites / 612 **"Non-Ionizing Radiation" / 612** Ultraviolet Radiation / 613 Infrared Radiation / 613 Inductive (Magnetic) Radiation / 613 Dielectric Energy / 613 Microwave Energy / 614

21 Material and Parts Handling / 615

Vacuum Loaders / 615 Coloring Loaders / 619 On-the-Machine Blenders / 619 Bulk Vacuum Flow Systems / 621 Plastics Materials Drying / 622 Injection Molding Parts Handling / 626 Extruded Parts Handling / 629 Granulators and Shredders / 632

22 Compounding / 635

Compounding Overview / 635 Mixing Theory / 635 Limitations of Mixing Theory / 636 Mixing Evaluation / 637 Fillers / 638 Plasticizers / 638 Colorants / 640 Heat Stabilizers / 642 Antioxidants / 642 Ultraviolet Light Absorbers / 643 Antistatic Agents / 643 Flame Retardants / 644 Blowing Agents / 644 Lubricants / 645 **Methods of Compounding / 645** Intensive Dry Mixers / 646 Internal Intensive Batch Mixer / 646 Continuous Mixer / 647 Two-Rolls Mills and Pelletizers / 648 Underwater Pelletizer / 649 Single-Screw Extruders / 649 Compounder-Extruder / 651 Twin-Screw Extruder / 652 Compounding Lines / 653

23 Finishing and Machining Plastics / 657

Finishing / 657 Filing / 658 Tumbling / 660 Grinding and Sanding / 661 Ashing, Buffing, and Polishing / 663 **Machining Plastics / 666** Introduction / 666 Drilling and Reaming / 667 Tapping and Threading / 673 Turning and Milling / 677 Sawing / 684 Piercing, Trimming, and Routing / 687 Blanking and Die-Cutting / 688 Counterboring and Spotfacing / 689 Laser Machining / 689 Jigs, Fixtures, and Automatic Feeding Devices / 689

24 Joining and Assembling Plastics / 693

Adhesive Bonding of Plastics / 693 Techniques / 697 Joints / 697 **Solvent Cementing Thermoplastics / 698** Adhesives / 700 Adhesive Forms / 701 Pretreatment / 705 **Cementing of Specific Plastics / 705** Cast Acrylic Sheeting / 705 Molded Acrylic Pieces / 708 Cellulosic Plastics / 709 Nylon / 710 Polycarbonate / 711 Polyethylene / 711 Polystyrene / 712 PPO Resins / 714 Polyvinyl Chloride and Vinyl Chloride-Acetate Copolymers / 715 TFE-Fluoroplastic / 716 **Cementing of Thermosetting Plastics / 716** **Welding of Thermoplastics / 718** High-Frequency or Dielectric Heat Sealing / 718 Thermal Sealing of Film and Sheet / 719 Hot Gas Welding / 720 Hot Plate Welding / 721

IPR2024-00299
Nespresso USA, Inc. Ex. 1029
Page 11 of 57

Induction Welding / 722 Spin or Friction Welding / 724 **Ultrasonic Assembly / 726** Equipment / 726 Materials / 728 Joint Design / 729 Ultrasonic Staking / 733 Inserting / 736 Spot Welding / 737 Film and Fabric Welding and Cutting / 737 Vibration Welding / 738 **Mechanical Joints / 738** Mechanical Fasteners / 738 Other Devices / 744 Swaging or Peening / 745 Press or Shrink Fitting / 745 Snap Fitting / 746 Integral Hinges / 747 Cold or Hot Heading / 749 **Automation / 749**

25 Design Standards for Inserts / 751

Introduction / 751 Thread-Cutting or Thread-Forming Self-Tapping Screws / 751 Molded or Tapped Threads with Machine Screws / 752 Molded-In Inserts / 752 Post-Molded Inserts / 753 **Design Standards / 758** Screw-Machine Inserts / 758 Cold-Forged Inserts / 759 Special Inserts / 761 Selection of Metal for Inserts / 761 Minimum Wall Thickness of Material Around Inserts / 762 Anchorage / 764 Insert Testing / 766 Problems in Molding With the Usual Types of Inserts / 767 Anchorage of Special Inserts / 769 Leakproof Inserts / 772 Special Inserts for Reinforcement / 773 Nonmetallic Inserts / 773 Preparation of Inserts Before Molding / 773 Cleaning Flash From Inserts / 775 Salvage of Inserts / 775 Relieving Molding Stresses Around Inserts / 775

26 Decorating Plastics / 777

Introduction / 777 **Surface Appearance Measurement / 777** **Coatability and Coating Adhesion / 778** **Surface Treatment / 778** Washing and Cleaning / 779 Mechanical Abrasion / 780 Chemical Etching / 780 Priming / 780 Flame Treatment / 780 Corona Discharge / 780 Plasma Treatment / 781 **Paints and Coatings / 781** Coated Products / 782 Coating Techniques / 782 Dip Coating / 785 Flow Coating / 785 Curtain Coating / 785 Roll Coating / 787 **Printing / 787** Screen Printing / 787 Flexographic Printing / 789 Gravure Printing / 789 Pad Printing / 789 **Hot Transfer Process / 790** **Laser Marking / 791** **Dyeing / 791** **Electroless Plating / 792** **Electrolytic Plating / 792** **Vacuum Metallizing / 794** Vacuum Evaporation / 794 Sputter Deposition / 795 **Labels and Decals / 795** Water-Transfer Process / 795 **In-Mold Decorating / 796** **Flocking / 796** **Embossing and Surface Texturing / 797** **Grinding and Polishing / 799** **References / 799**

27 Performance Testing of Plastics Products / 801

Performance Testing / 802 Specific Gravity and Density (ASTM D792) / 803 Flow Rate (Melt Index) by Extrusion Plastometer (ASTM D1238) / 804 Water Absorption (ASTM D570) / 804 Environmental Stress Cracking (ASTM D1693) / 805 Conditioning Procedures (ASTM D618) / 805 Tensile Properties (ASTM D638) / 806 Flexural Properties of Plastics (ASTM D790) / 806 Stiffness of Flexure (ASTM D747) / 807 Izod Impact (ASTM D256) / 807 Tensile Impact (ASTM D1822) / 808 Falling Dart Impact (ASTM DD1709, ASTM D2444, ASTM D3029) / 809 Instrumented Impact / 809 Rockwell Hardness (ASTM D785) / 810 Compressive Properties of Rigid Plastics (ASTM D695) / 810 Durometer Hardness (ASTM D2240) / 811 Shear Strength (ASTM D732) / 811 Deformation Under Load (ASTM D621) / 811 Vicat Softening Point (ASTM D1525) / 811 Deflection Temperature under Fleural Load (ASTM D648) / 812 Brittleness Temperature (ASTM D746) / 813 Permanent Effect of Heat (ASTM D794) / 813 Haze and Luminous Transmittance of Transparent Plastics (ASTM D1003) / 814 Luminous Reflectance, Transmittance and Color (ASTM E308) / 814 Tests for Electrical Resistance (ASTM D257) / 814 Dielectric Constant and Dissipation Factor (ASTM D150) / 815 Arc Resistance (ASTM D495) / 816 Outdoor Weathering (ASTM D1435) / 816 Accelerated Weathering (ASTM G23) (Recommended practice) / 817 Accelerated Exposure to Sunlight Using the Atlas Type 18FR Fade-Ometer (ASTM G23) / 817 Pipe Tests (Commercial Standard CS 255) / 818 **Automation of Testing / 819**

Index / 821

IPR2024-00299
Nespresso USA, Inc. Ex. 1029
Page 12 of 57

13

Thermoforming of Plastic Film and Sheet

OVERVIEW

Thermoforming is the process of heating a plastic material in sheet form to its particular processing temperature and forming the hot and flexible material against the contours of a mold by mechanical means (e.g., tools, plugs, solid molds, etc.) or pneumatic means (e.g., differentials in air pressure created by pulling a vacuum or using the pressures of compressed air). When held to the shape of the mold and allowed to cool, the plastic retains the shape and detail of the mold. Because softening by heat and curing by the removal of heat are involved, the technique is applicable only to thermoplastic materials and not to thermosets.

Examples of thermoformed products are plastic or foam dinnerware, cups, meat and produce trays, egg cartons, refrigerator liners, computer housings, interior and exterior automotive parts, blisters for packaging, and countless others. These common and often taken-for-granted products are not usually thought of as the result of detailed tooling design, precise controlled heating and forming, expert material technology, and trimming/finishing operations. Clearly, the thermoforming process is an important link in the plastics industry.

The basic process as it is known today has been developing for over 40 years, but historians have found that the Pharoahs of Egypt developed a type of thermoforming by softening tortoise shells with hot oils to form food utensils. During World War II, with the development of thermoplastics, thermoforming was used to produce aircraft canopies and domes, as well as relief maps.

During the 1950s, thermoforming began to expand into new areas—acrylic windshields, outdoor signs, blister packaging, and refrigerator door liners.

Exceptional growth occurred during the 1960s, as thermoforming became one of the major plastics fabricating techniques. High-volume markets for individual-portion food packaging, blister packaging, and appliance housings were developed.

The 1970s brought an emphasis on high-volume, high-speed processing machinery—and viable competition with the pulp and paper industry resulted.

Advantages of thermoforming over most other methods of processing plastics include lower tooling and machinery costs, high output rates, the ability to use predecorated plastic sheet, and good-quality physical properties in finished parts.

Its disadvantages include the need to begin with sheet or film rather than less costly basic resins, trimming material used to clamp sheet for forming, and the problem of trim scrap reclamation.

METHODS OF THERMOFORMING

Because there are so many different techniques for thermoforming plastic sheet, the basic forming methods will be reviewed in this sec-

Reviewed and updated by Judith A. Penix, Marketing Coordinator, Lyle Industries, Inc., Beaverton, MI.

M. L. Berins (ed.), *SPI Plastics Engineering Handbook of the Society of the Plastics Industry, Inc.*
© Van Nostrand Reinhold 1991

IPR2024-00299
Nespresso USA, Inc. Ex. 1029
Page 13 of 57

tion. Many of the illustrations (Figs. 13-1 through 13-14 inclusive) are based on equipment incorporating parallel-acting frames, heaters above and below the sheet stock (called sandwich heaters and capable of heating both sides of the sheet), and top and bottom movable platens with vacuum or compressed air, enabling the use of male or female molds and plug assists. With this flexibility, any of the known techniques can be used. There are, of course, many variations in thermoforming techniques that go beyond this simplified approach, such as folding book-action frames, single heaters above and below, alternating molds, and so on.

It should also be noted that, according to general terminology, the term "male molds" connotes a primarily convex mold; "female mold" is a primarily concave mold; the "ring" is the initial plane from which the sheet is drawn to shape it; a "plug" (which may or may not be the male mold) is the component of the mold that moves through the ring and carries the sheet of plastic with it.

Vacuum Forming into a Female Mold

To vacuum form a thermoplastic sheet into a female mold without prestretching, the ratio of depth to minor dimension of a given section should not be greater than 1:1, and no sharp inside radii are required. The sheet stock is locked in a frame around its periphery only, is heated to a predetermined temperature, and then is brought into contact with the edge of the mold. This contact should create a seal so that it is possible to remove the air between the hot plastic and the mold, allowing atmospheric pressure (about 14 psi) to force the hot plastic against the mold.

Most thermoplastics sheets (with the exception of cast acrylic) can be easily formed with vacuum. The reasons for using a female mold are: greater details can be achieved on the outer surface of the part (the side against the mold); multiple cavities can be placed closer together; and this type is easier to work with when close tolerances are needed on the outside of the part. Female molds are more expensive to make than male molds, however.

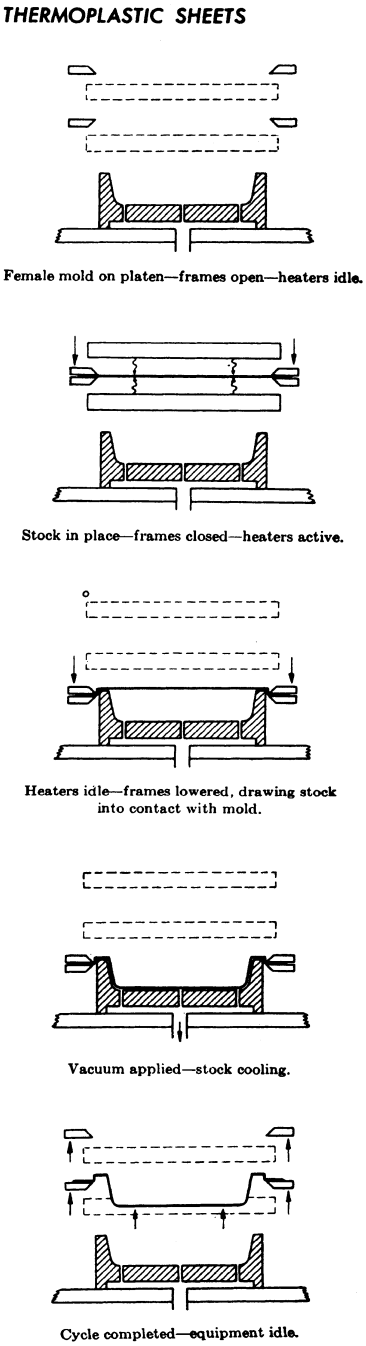

Fig. 13-1. Vacuum forming.

Vacuum forming is illustrated in Fig. 13-1.

When this method is used to make an article having an irregular ring line or periphery, the stock is not held by a frame, but is draped manually to the required contour in such a way as to make a seal possible. After that, the procedure described above is followed.

Pressure Forming into Female Cavity

Instead of relying on atmospheric pressure against a vacuum (as in vacuum forming, above), forming by compressed air at up to 500 psi is now also common. Positive air pressure is applied against the top of the sheet to force it into a female mold, and, at the same time, *full* vacuum also is applied. As contrasted to vacuum forming, pressure forming offers a faster production cycle (the sheet can be formed at a slightly lower sheet temperature), greater part definition, and greater dimensional control. (See Figs. 13-2 and 13-3.)

Free Forming

This variation, also called *free blowing* has been used with acrylic sheeting to produce parts that require superior optical quality. The periphery is defined mechanically by clamping, but no mold is used, and the depth of draw is governed only by the vacuum or compressed air applied. Visual control or an "electric eye" is used to cut off the pressure when the required depth or height is reached.

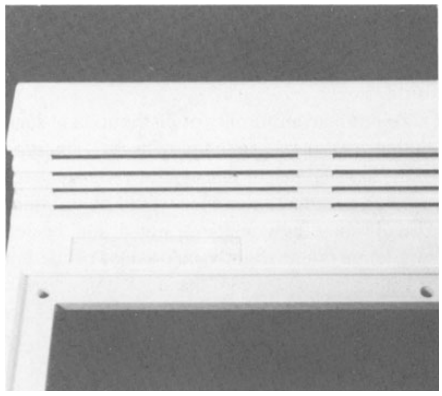

Fig. 13-3. Computer housing is an example of pressure forming, providing critical part definition and textured effect. (*Courtesy CAM/Central Automated Machinery, Inc.*)

Plug-Assist Forming

Straight cavity forming is not well adapted to forming a cup or box shape. The sheet, drawn down by vacuum, touches first along the side walls and then at the center of the bottom of the box-shaped mold and starts to cool there, with its position and its thickness becoming fixed. As the sheet continues to fill out the mold, solidification continues in such a way as to use up most of the stock before it reaches the periphery of the base; hence this part of the article will be relatively thin and weak. This

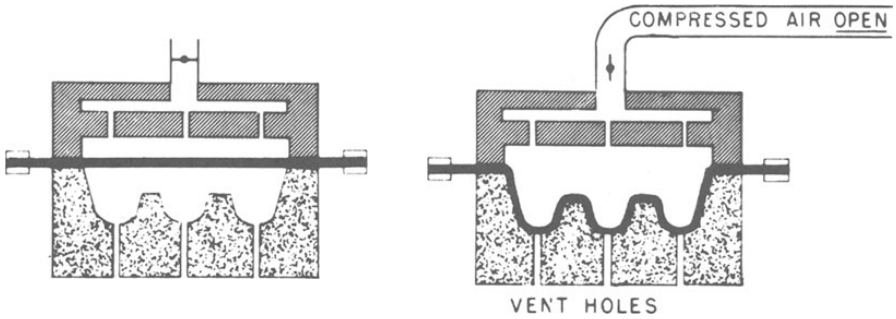

Fig. 13-2. Pressure forming into female cavity. Heated sheet is clamped over cavity, and compressed air pressure forces the sheet into the mold. (*Courtesy Dow*)

characteristic is undesirable in a cup shape, and usually unacceptable in a box shape, in which the thinness will be most marked at the corners of the base.

To promote uniformity of distribution in such shapes, designers use the plug assist—any type of mechanical helper that carries extra stock toward an area that otherwise would be too thin. Usually the plug is made of metal, and heated to a temperature slightly below that of the hot plastic, so as not to cool the stock before it can reach its final shape. Instead of metal, a smooth-grained hard wood can also be used, or a felt-covered phenolic or epoxy; these materials are poor conductors of heat and hence do not withdraw much heat from the sheet stock. Syntactic foam has been very popular for this application.

The plug-assist technique is illustrated in Fig. 13-4. Note that it is also possible to reverse mold and plug assist from the bottom platen to give better material utilization around the edges.

Both cavity and plug-assist forming make possible the production of shapes having protuberances on their inner surfaces, formed in contact with plugs projecting from the interior of the female mold. In the sides of an article, such protuberances constitute undercuts, so that ordinarily the sections that form them must be withdrawn in order to release the article from the mold. But some undercut articles made from tough flexible sheeting can be sprung out of the mold.

Plug-assist techniques are adaptable to both vacuum forming and pressure forming techniques. The system shown in Fig. 13-4 is known as plug-assist vacuum forming in that a vacuum is drawn after the plug has reached its closed position to complete formation of the sheet. In plug-assist pressure forming, the process differs in that after the plug enters the sheet, a partial vacuum is applied. Where the plug bottoms out, a full vacuum is drawn, and compressed air is applied to the opposite side. As opposed to plug-assist vacuum forming, pressure forming offers more uniform material distribution over the entire formed part (see Fig. 13-5).

Drape Forming

This method also is adaptable to either machine or manual operation. After framing and heating, the stock is mechanically stretched over a male mold to allow the framed edge to make a seal with the periphery of the mold. This stretching serves to redistribute or preform the sheet prior to application of the vacuum. It has the disadvantage of allowing the stock to touch prominent projections, freeze there, and perhaps rob other areas of sufficient mass to make acceptable articles. Careful control of the temperature of the mold, plus selective heating of the sheets, can alleviate some difficulties. Many articles are well adapted to this technique, which has the advantages of low cost for both mold and machine, and rapidity of operation. This technique is illustrated in Fig. 13-6.

The term "drape forming" sometimes is applied to forming a hot sheet by laying it over a mold (either male or female) and allowing it to conform by gravity or pressure.

Matched Mold Forming

In recent years, a number of mechanical techniques that use neither air pressure nor vacuum have evolved. Typical of these is matched mold forming (Fig. 13-7). In this operation, the plastic sheet is locked into the clamping frame and heated to the proper forming temperature. A male mold is positioned on either the top or the bottom platen with a matched female mold mounted on the other one.

The mold then is closed, forcing the plastic to the contours of both molds. The clearance between the male and female molds determines the wall thickness. Trapped air is allowed to escape through both mold faces. Molds are held in place until the plastic cools and cures.

Matched mold forming offers excellent reproduction of mold detail and dimensional accuracy. Internal cooling of the mold is desirable in this technique.

Trapped Sheet

This thermoforming technique involves the use of both contact heat and air pressure (Fig.

IPR2024-00299
Nespresso USA, Inc. Ex. 1029
Page 16 of 57

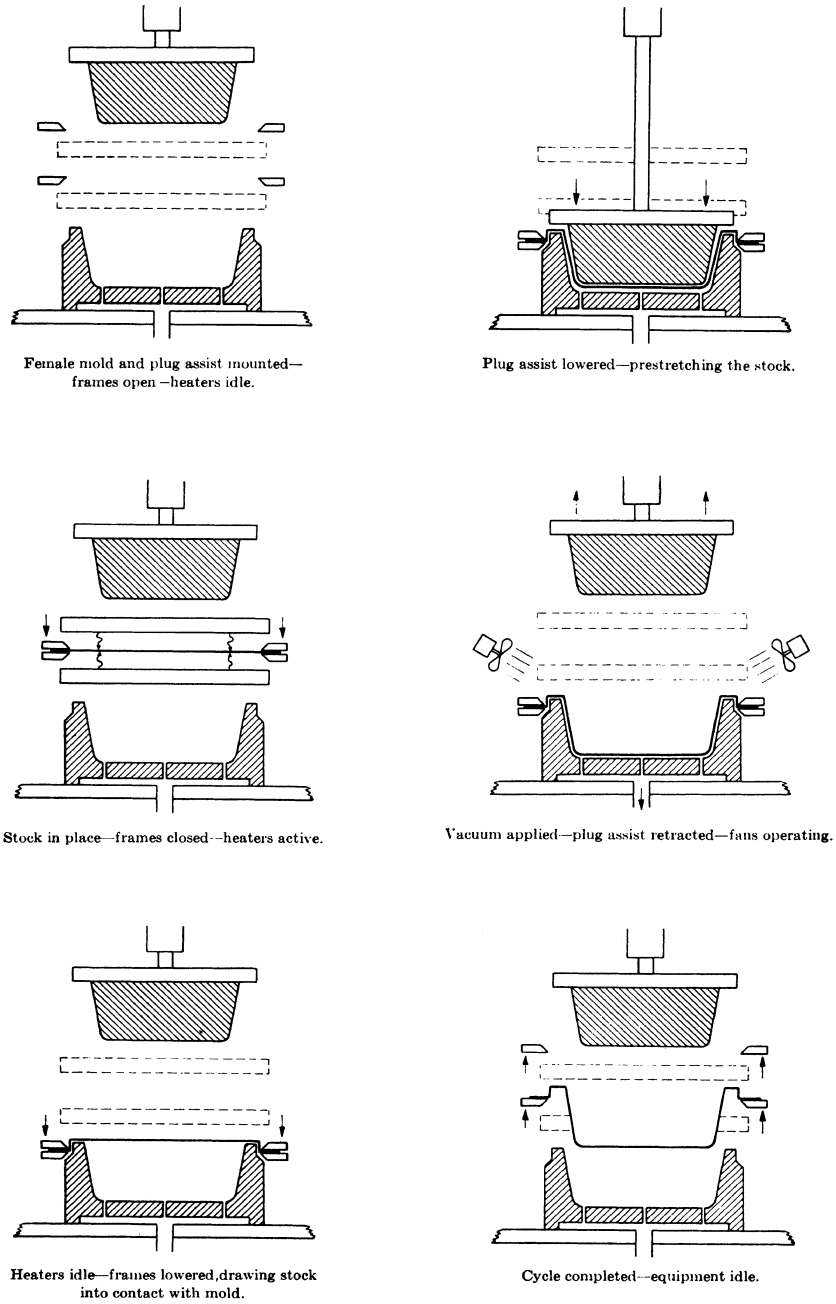

Fig. 13-4. Plug-assist forming, using vacuum.

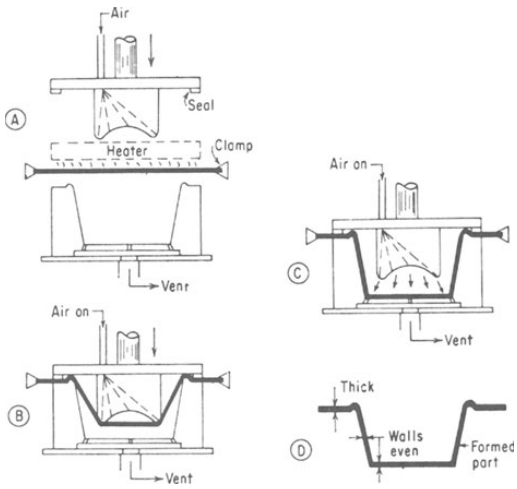

Fig. 13-5. Plug-assist pressure forming. (*Courtesy McGraw-Hill*)

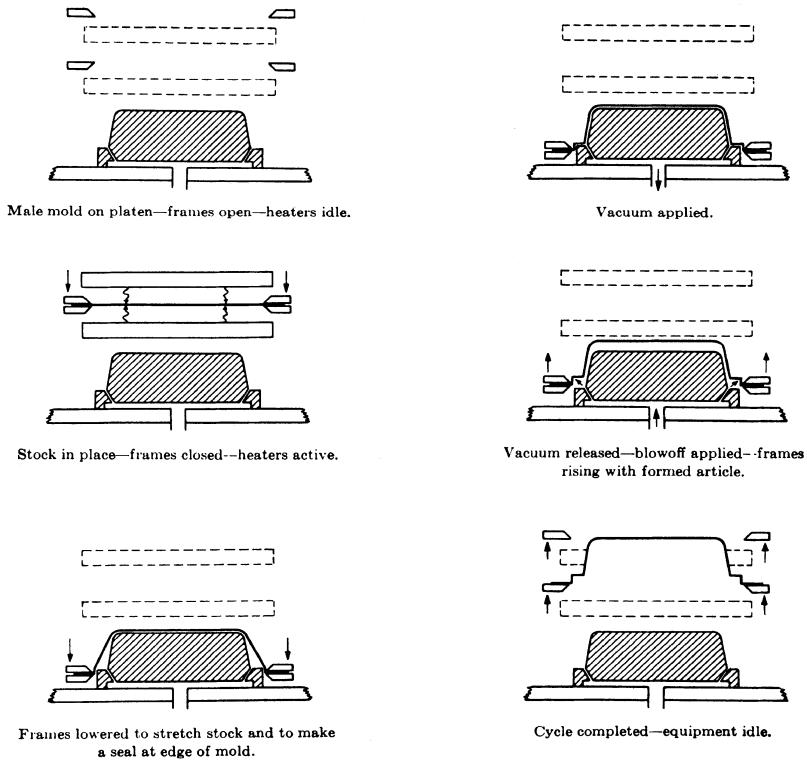

Fig. 13-6. Drape forming.

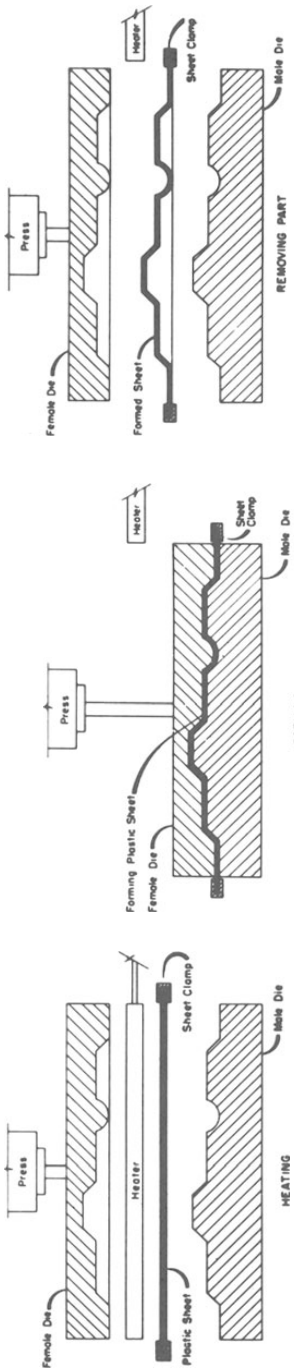

Fig. 13-7. Matched mold forming. (*Courtesy Dow*)

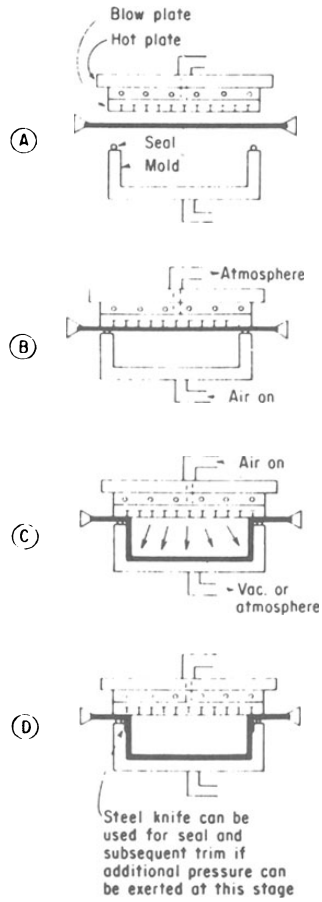

Fig. 13-8. Trapped sheet forming. (*Courtesy McGraw-Hill*)

13-8). The plastic sheet is inserted between the mold cavity and a hot blow plate (which is flat and porous to allow air to be blown through its face). The mold cavity seals the sheet against the hot plate. Air pressure is applied from the female mold beneath the sheet and blows the sheet against the contact hot plate. A vacuum also can be drawn on the hot plate. After heating, the plastic sheet is ready for forming.

Air pressure applied through the hot plate forms the sheet into the female mold. Venting or vacuum can be used on the opposite side, and steel knives can be inserted into the molds

IPR2024-00299
Nespresso USA, Inc. Ex. 1029
Page 19 of 57

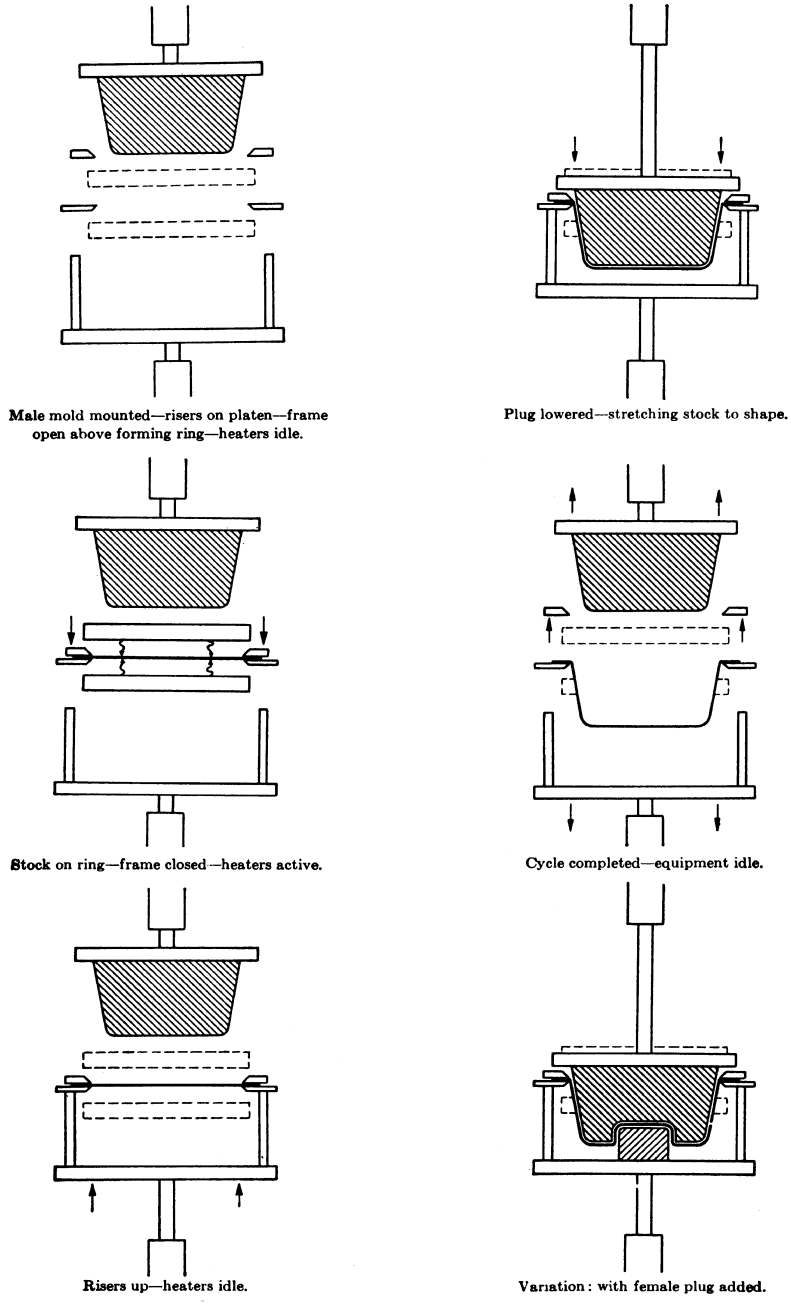

Fig. 13-9. Plug-and-ring forming.

for sealing. After forming, additional closing pressure can be exerted for trimming.

Plug-and-Ring Forming

This is the simplest type of mechanical forming that involves more than a fold into two planes. The equipment consists of a plug, which is the male mold, and a ring matching the outside contour of the finished article. Stock may be heated away from the ring or on the ring, after which the plug is forced through the ring, drawing the plastic with it in such a way as to redistribute the stock over the shape of the plug. In order to prevent excessive chilling of the plastic, either the plug is made of a material of slow thermal conductivity, or, if it is made of metal, its temperature is controlled. This method, illustrated in Fig. 13-9, has been used for the manufacture of single- and multicavity trays, with excellent yields in large volumes.

Ridge Forming

This is a variation of plug-and-ring forming in which the plug is reduced to a skeleton frame that determines the shape of the article. Because the sheet comes into contact only with the ridges of this frame, the intervening flat areas are free from mold surface defects or "mark-off" and have better surface quality than if formed against a solid mold. (See Fig. 13-10.)

If a skeleton frame that surrounds a plane is used, the areas of the formed piece are plane surfaces. In other shapes with ridges that do not fall in a plane, the intervening surfaces tend to be concave.

Slip Forming

This method is adapted from the technique of drawing metal from a preshaped blank having approximately the same area as that of the drawn article; thus an article 4 × 4 inches and 2 inches deep is made from an irregularly shaped blank about 8 × 8 inches, held in pressure pads corresponding to the length and width of the article, and allowed to slip from them as

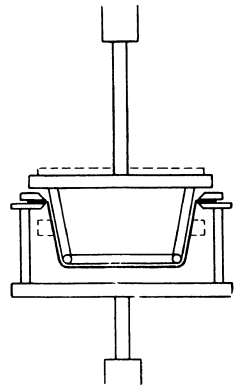

Fig. 13-10. Ridge forming.

drawing proceeds. As applied to the forming of plastics, this method is restricted by the hot strength of the plastic, and by the likelihood of its being scored in slipping out of the restraining pressure pads.

This technique is illustrated in Fig. 13-11a; a variant of it is shown in Fig. 13-11b. The springs shown in these drawings can be replaced by air cylinders with relief valves, to improve the control. Automotive carpeting is formed in this way, as are woven fabric reinforced materials.

Snap-Back Forming

The vacuum snap-back techniques preceded so-called vacuum forming machines by several years. In the 1940s most deep draw point-of-sale plastic displays were made by this process.

The ring matches the desired periphery of the article. In mechanical operation, the cold sheet of plastic is clamped to the ring close to its forming edge, and is heated; the vacuum box beneath the ring is moved into contact with the ring to make a seal. In manual operation, the sheet is preheated and clamped to the ring, and the ring is placed over the vacuum box. A small bubble of the plastic is drawn into the box, by vacuum, just ahead of the male mold. As soon as the male mold reaches its final position, the vacuum in the prestretch box is released, and

IPR2024-00299
Nespresso USA, Inc. Ex. 1029
Page 21 of 57

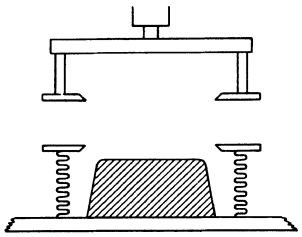

Male mold on platen—spring-loaded pads open—forming ring with risers above.

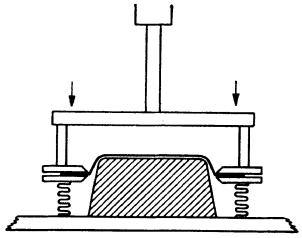

Stretching in progress—stock slipping inward.

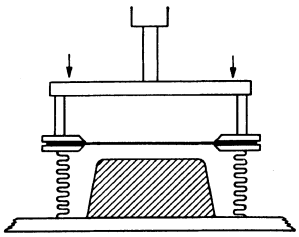

Stock in place—ring moving downward.

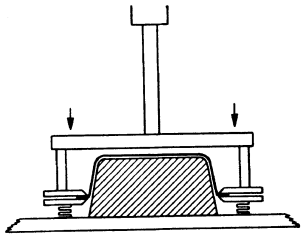

Forming completed—stock slipped to optimum.

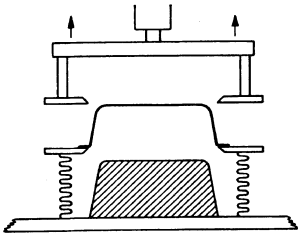

Cycle completed—equipment idle.

Fig. 13-11a. Slip forming.

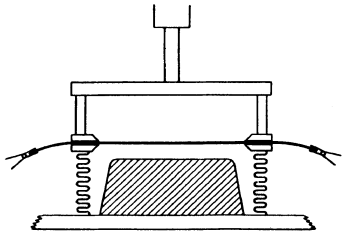

Variation: narrow ring—clips to restrict slippage.

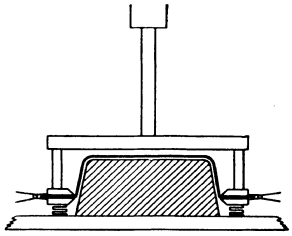

Forming completed—clips against ring.

Fig. 13-11b. Slip forming.

the hot plastic snaps back around the mold with the vacuum now applied to the mold. This method produces good uniform wall thickness. It is entirely possible to control all phases of this procedure with microprocessors or timers and limit switches, so that repetitive performance is guaranteed.

Many cases and luggage shells and computer housings made from grained or textured sheet are formed by this technique. Also, materials such as acrylic cast sheet, that have high hot strength and do not conform to small radii under vacuum alone, frequently are formed over a male mold by such a process. (See Fig 13-12.)

A variation of this process is known as the air-slip method. The male mold is confined in a box in such a manner that, as it moves toward the hot plastic, air is trapped. As pressure builds up, the plastic is pushed ahead of the mold just as is done with vacuum snap-back. When the mold is in final position, the air is released, and the vacuum is applied to the mold to define the details.

Billow-Up Prestretch Techniques

There are at least three variations of this process worthy of study, but all employ the principle of pushing the plug into the outside of a bubble of hot plastic, thus accomplishing a folding operation that permits deeper draws than are possible by any other common practice. The final shape may be determined by a male mold or a female mold. The latter is recommended except when a grained stock is used and the grain is on the outside of the article, or when the original surface gloss of the sheet might be impaired by contact with a mold.

The material is thinned at the center of the bubble before contact with the plug. A free-blown hemisphere has at its center a thickness about one-third that of the original sheet. The thinned area, however, remains in contact with the plug (or male mold), and is carried by it. Further stretching occurs in the thicker side area, so that the finished article has approximately uniform thickness.

Billow-Up Plug Assist (or Reverse Draw with Plug Assist)

The stock is placed in the frame and heated. Then the female mold is moved into the stock close to the edge of the frame, deep enough to maintain a seal while a bubble is blown. Air is introduced into the female mold to a pressure of about 1 to 3 psi, or more, sufficient to create a bubble toward the plug. The plug, in this case only a sheet-carrying assist, is heated to a temperature only slightly less than that of the hot stock itself. As it is moved, it pushes the redistributed stock into the cavity in a folding or rolling action. The plug is designed slightly undersize, about 85%, but should move the stock to a shape quite close to its final position in the female mold. The final shaping then is accomplished with vacuum and/or compressed air being applied to the female mold. (See Fig. 13-13.)

By regulating the temperature of the stock, the height of the bubble, and the temperature and speed of travel of the plug assist, as well as the release of air pressure and application of vacuum, it is possible to closely control the thickness of any given section of the article. One exception is that corners never will be thin because the folding or rolling action as the plug moves downward gathers extra stock around the corners. Articles formed into a cavity shrink away from the mold; so little draft is required in the mold.

By this process articles may be drawn with uniform wall thicknesses less than 25% of the original stock thickness, with repetitive quality, and usually without apparent impairment of the physical properties of the original material. But in some cases a uniaxial orientation of stress may develop, so that the finished article is crack-sensitive parallel to the direction of stretch. This becomes more noticeable if the flanges are trimmed off.

Billow-Up Vacuum Snap-Back

The third version of this method is used with grained or polished stock on a male mold, to preserve the finish. The blank must be oversize

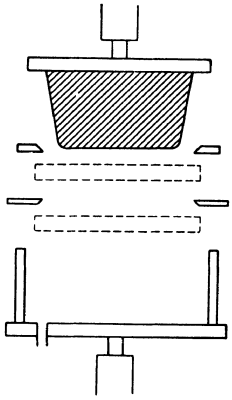

Male mold above—vacuum chamber below—frame open—forming ring and heaters idle.

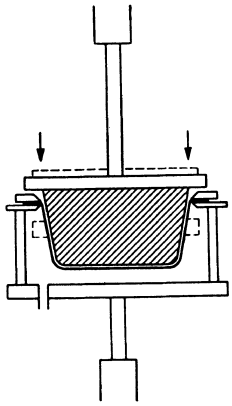

Forming completed—vacuum released for snap-back. (Vacuum should not be released until male mold is in place.)

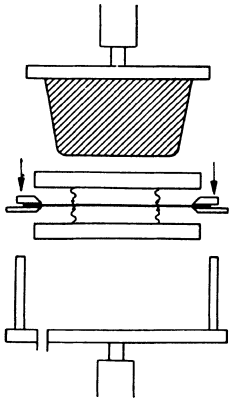

Stock on ring—frame closed—heaters active.

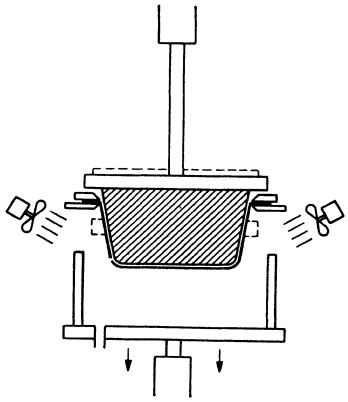

Vacuum chamber retracted—fans operating.

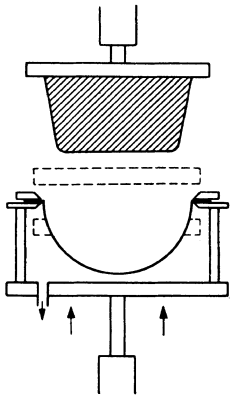

Vacuum chamber up—heaters idle—vacuum applied.

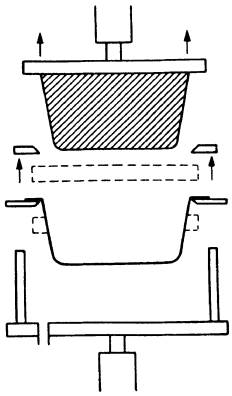

Cycle completed—equipment idle.

Fig. 13-12. Snap-back forming.

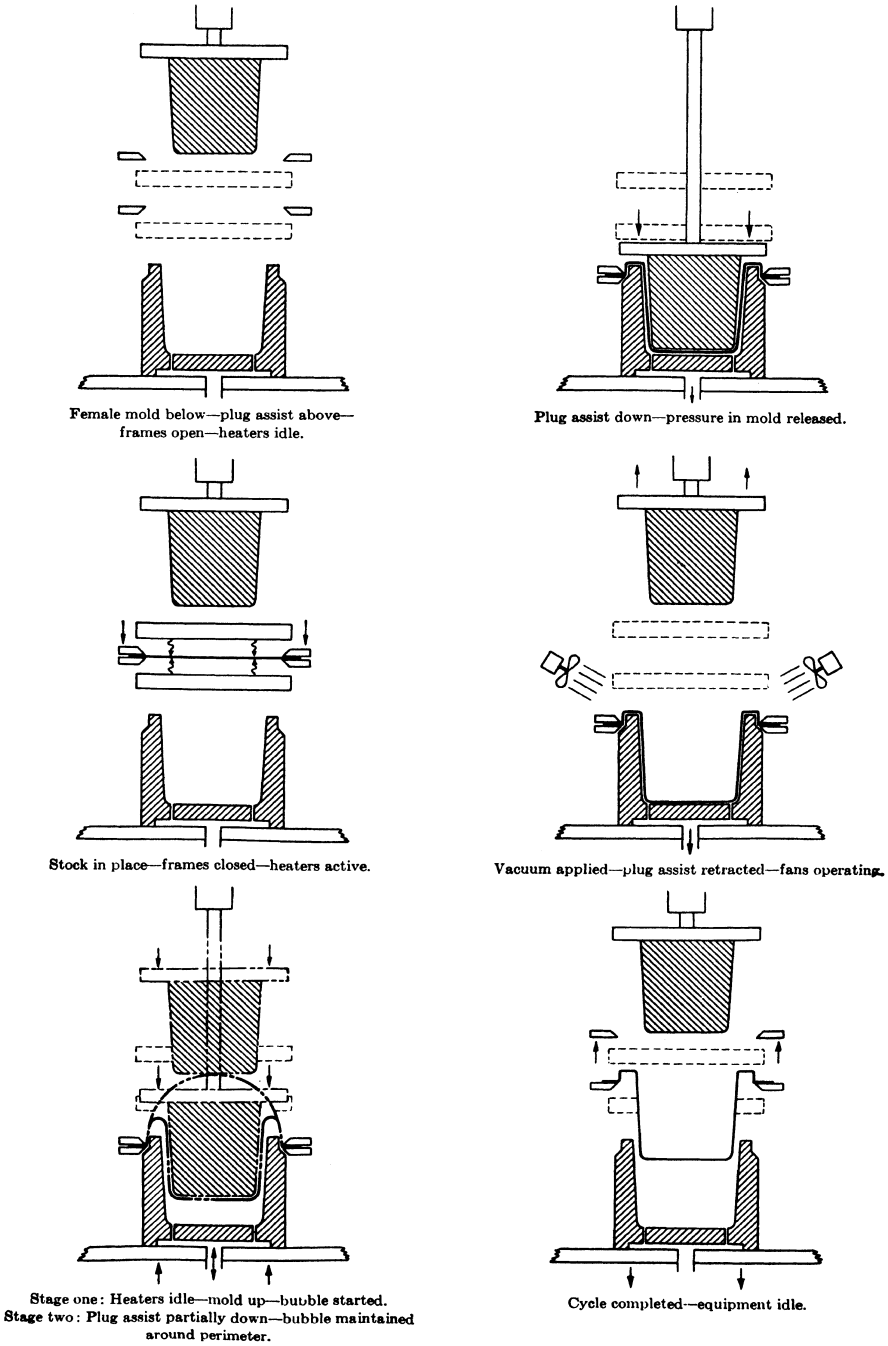

Fig. 13-13. Reverse draw with plug assist.

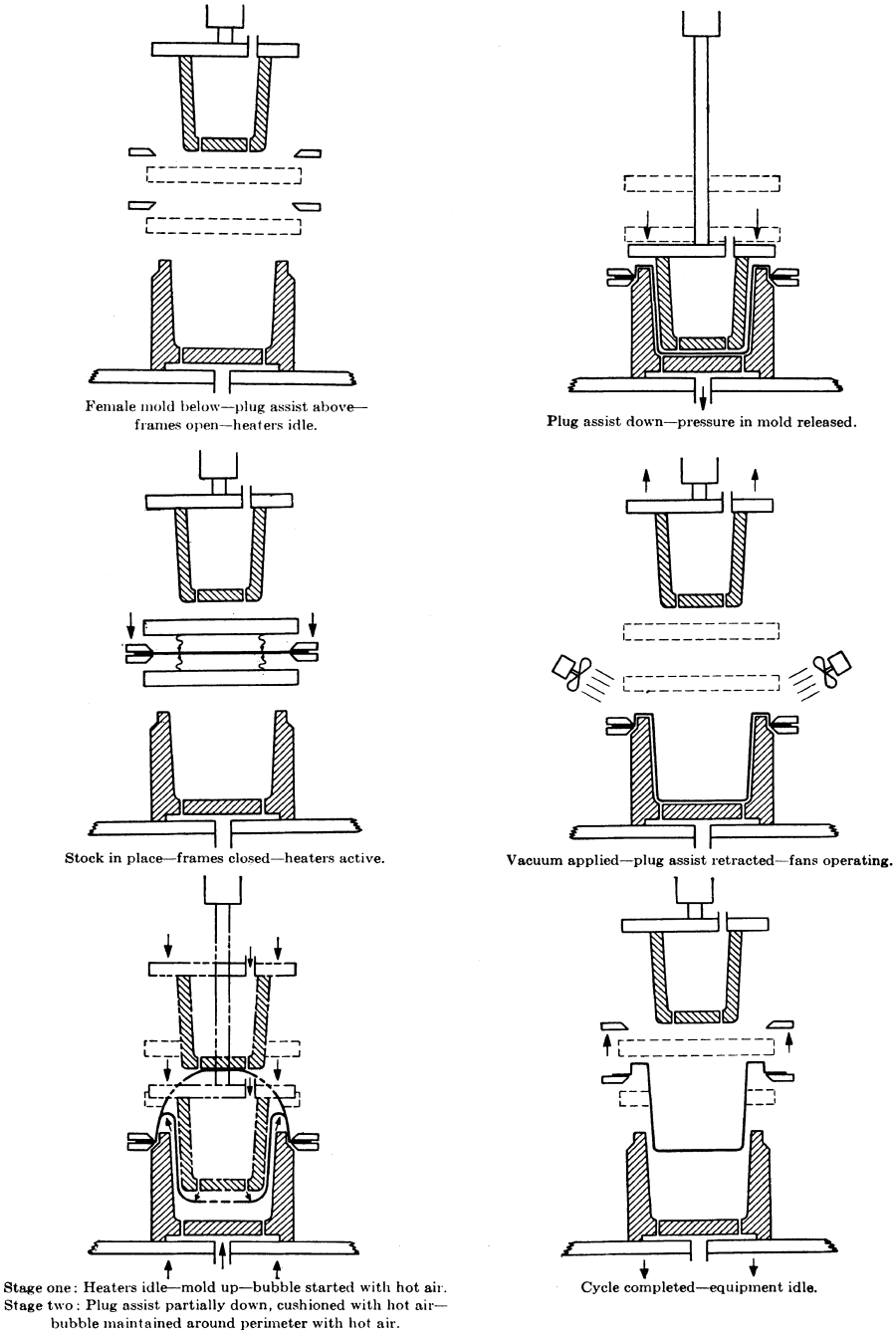

Fig. 13-14. Reverse draw on a plug.

to provide a bubble of sufficient size and shape, so that when the mold comes into contact with the outside of the bubble, the stock that touches the bottom of the mold freezes there and need not be reduced further in thickness or change its shape. Corners should be "cut" to avoid "webbing." The forming ring matches the finished article and assists in "wiping" the stock around the mold as the mold moves into final position. (See Fig. 13-14.)

The mold should be run as warm as is compatible with efficient cooling of the article. It should be a temperature-controlled aluminum mold.

Dual Sheet Forming

A number of techniques have been made available for the production of hollow products by thermoforming. Typical is the concept of dual sheet thermoforming (also known as twin-sheet forming). It operates as follows: Two rolls of plastic sheet are automatically fed, one above the other, with a predetermined space in between, through the heating stations and into the forming station. Here a blow pin enters at the central point of the hollow object (i.e., in between the two sheets), and the upper and lower halves of the tool close onto the sheets and pinch off around the entire perimeter. High-pressure air then is introduced between the two sheets from the blow pin, and a vacuum is applied to each of the two mold halves. The hollow object then indexes forward, and the next two segments of sheet move into place for forming.

In one variation of the process, urethane foam instead of air pressure is introduced between the two sheets. The urethane bonds to the two skins, forming a rugged sandwich construction. This technique is applicable to the manufacture of urethane foam-filled boat hulls.

Another technique for making hollow products is known as clam-sheel forming. This is a sheet-fed technique involving the use of a rotary-type machine. The individual sheets are placed in separate clamp frames, and then indexed through the heating station and into the forming station. Here, a vacuum is applied to both halves of the mold to draw the upper sheet into the upper mold half and the lower sheet into the lower mold half. (See Fig. 13-15.)

Still another method, known as twin-shell forming, involves the use of a series of continuously moving molds (traveling on belts) that clamp onto the sheets (feeding off rolls) and travel with them as the vacuum is pulled and the sheet halves are formed. (See Fig. 13-16.)

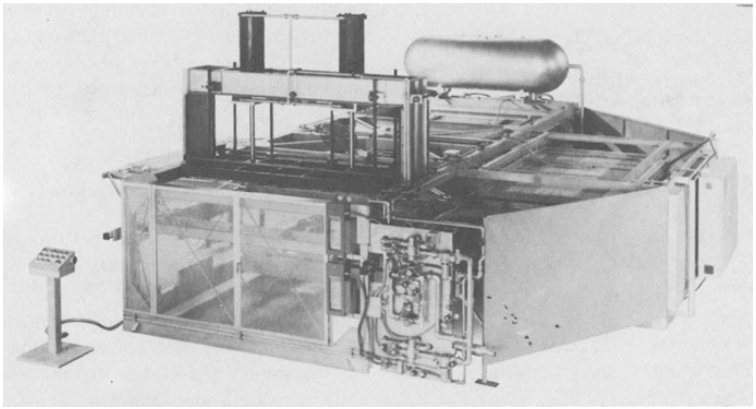

Fig. 13-15. Dual-sheet thermoforming is accomplished on this four-station rotary thermoformer by two sheets of thermoplastic material that are heated independently and are permanently bonded in the forming station. (*Courtesy CAM/ Central Automated Machinery, Inc.*)

IPR2024-00299
Nespresso USA, Inc. Ex. 1029
Page 27 of 57

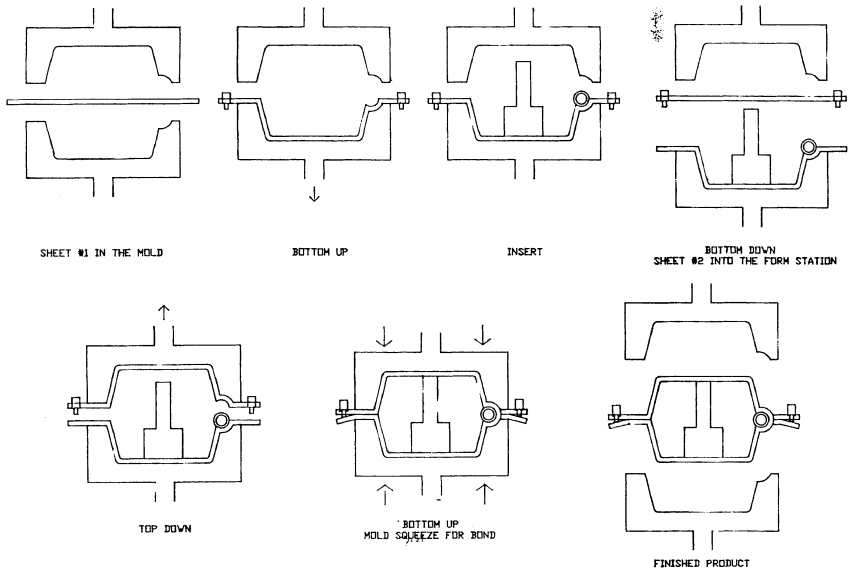

Fig. 13-16. Dual-sheet forming. (*Courtesy CAM/Central Automated Machinery, Inc.*)

THERMOFORMING MACHINES

Industrial thermoforming machines are as varied as the products they were designed to produce. They range from relatively simple, shallow-drawn, manually controlled equipment to complex, microcomputer-controlled rotary and in-line machines designed for production and efficiency, and to the recent "totally electric" thermoformers.

Any thermoforming machine must provide the following: (1) a method for heating sheet to the pliable plastic state called the "forming temperature; (2) a clamping arrangement to hold the plastic sheet for heating and positioning for forming; (3) a device to raise or lower the mold into the plastic sheet or to move the clamped sheet over the mold; (4) a vacuum system; (5) an air-pressure system; (6) controls for the various operations; and (7) safety devices.

Machines often are classified according to the number of operations they perform, as discussed below.

This section presents two types of thermoforming machinery—cut-sheet and roll-fed.

Cut-sheet or sheet-fed machinery utilizes material typically .060 inch up to .500 inch thick, being ideally suited to forming large durable goods such as industrial pallets, boat hulls, computer housings, automotive components, and refrigerator door liners.

Roll-fed or continuous-type thermoformers are fed from a continuous roll of plastic sheet, usually less than .035 inch thick, or fed directly from an extruder. Typical applications are high-production items such as plates, cups, trays, and blister packaging. (See Fig. 13-17.)

Single-Stage, Sheet-Fed Machines

A single-stage machine can perform only one operation at a time, and its total cycle will be the sum of the times required for loading, heating, forming, cooling, and unloading. In a typical operation, the sheet is clamped in a frame, and the frame is moved between the heaters (or under a single heater) and back to the forming station for thermoforming. (See Figs. 13-18 and 13-19.)

Fig. 13-17. Typical products on roll-fed continuous thermoformers. (*Courtesy Lyle Industries, Inc.*)

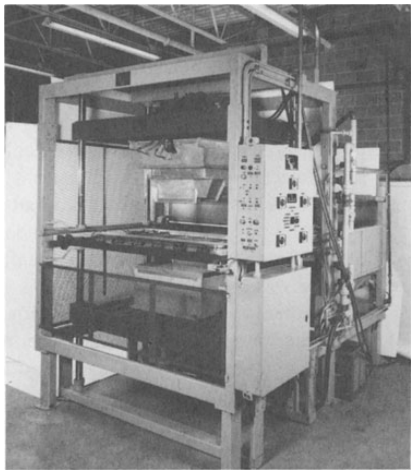

Fig. 13-18. Single-stage shuttle thermoformer for cut-sheet applications. Material is loaded into clamp frame, moved into oven area, shuttled back into form station, and then unloaded. (*Courtesy CAM/Central Automated Machinery, Inc.*)

Multiple-Stage, Sheet-Fed Machines

A two-stage machine can perform two operations simultaneously. It usually consists of two forming stations and a bank of heaters that move from one station to the other. Machines with three stages or more usually are built on a horizontal circular frame and are called rotaries. (See Fig. 13-20.) The rotary thermoformer operates like a merry-go-round, indexing through the various stations. A three-stage rotary machine would have a loading and unloading station, a heating station, and a forming station, where cooling also takes place, and would index 90° after each operation. Because there is always a sheet in each of the stations, it provides considerably higher output than a single-station machine. (See Fig. 13-21.)

Four-stage rotaries can incorporate various station configurations (i.e., load/unload, preheat, heat, form; or load, heat, form, and unload).

IPR2024-00299
Nespresso USA, Inc. Ex. 1029
Page 29 of 57

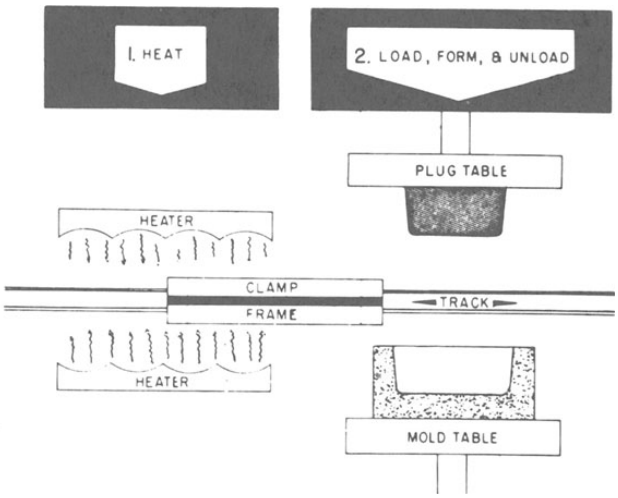

Fig. 13-19. Single-stage forming unit. (*Courtesy Dow*)

In-Line, Sheet-Fed Machines

Here, the sheet follows the same pattern as a caterpillar track. The sheet is clamped in a frame that travels into the heating station, then indexes through the forming station and on to the unloading station, where the part is removed by the operator. This type of machine has a total of five clamp frames in use at all times.

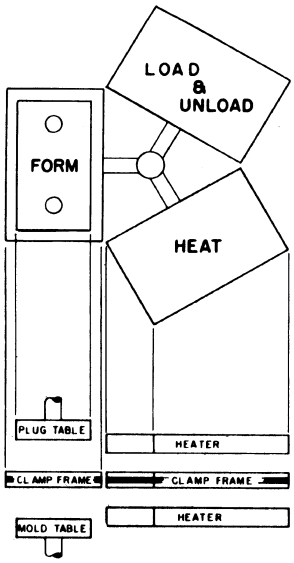

Fig. 13-20. Three-stage rotary unit. (*Courtesy Dow*)

Continuous Roll-Fed Machines

In the early days of thermoforming, continuous forming machines that fed off a roll of plastic or directly from an extruder used either a rotating cylinder as the mold (drum former) or conventional molds that traveled horizontally at the same speed as the sheet (the upper and lower platens moved with the sheet but had a reciprocating motion so that they could index to the next unformed section of sheet, once the forming cycle was complete).

The workhorse of the industry today, however, is the intermittently fed continuous forming machine (used for thin wall containers, disposable cups, lids, etc.). (See Fig. 13-22.) This machine is fed either from a roll or directly from an extruder. As opposed to the systems described above, however, the sheet is indexed through the machine intermittently. It is considerably faster than those techniques where the sheet is continuously moving through the machine, and the molds have to move back and forth.

IPR2024-00299
Nespresso USA, Inc. Ex. 1029
Page 30 of 57

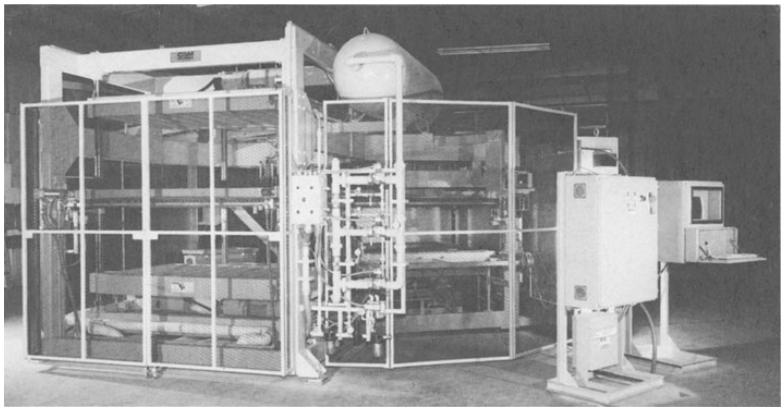

Fig. 13-21. Three-state rotary thermoformer includes load/unloaded station, heat station, and form station. (*Courtesy CAM/Central Automated Machinery, Inc.*)

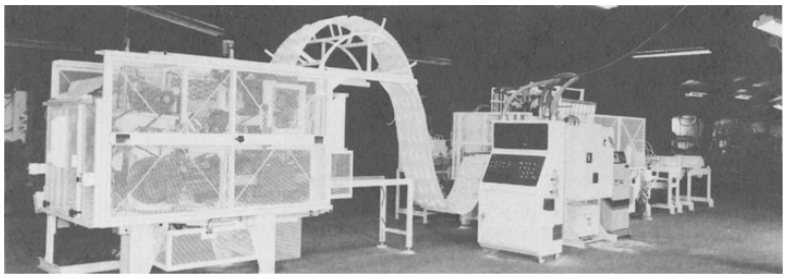

Fig. 13-22. Roll-fed continuous thermoformer in-line with trim press for high production of thin-wall products. (*Courtesy Lyle Industries, Inc.*)

In a typical operation, the sheet feeds off a roll at the rear of the thermoformer into a set of conveying chains that indexes the sheet intermittently forward through heating, forming, and trimming. Once the roll of material is threaded through the system, it functions completely automatically and can cycle as fast as two seconds.

Packaging Machines

Although most of the equipment already discussed can be used to form plastic packages, several machines have been adapted to combine the forming operation with other packaging functions. Such machines are used chiefly for skin or contour packaging and blister packaging. Both processes involve the sealing of paperboard or plastic to the formed plastic sheet, with the product to be packaged enclosed. Most conventional machines can be equipped to handle skin packaging, as the loading operation is usually manual. (See Fig. 13-23.) These machines may operate from roll or sheet stock, and some are equipped to trim the packages as they leave the machine.

Rather elaborate machines now are available for complete blister packaging. These machines will form the blisters, provide an area for manual or automatic loading, seal paperboard to the back side, and die-cut the finished packages. Generally, they operate with intermittent or continuous feed of roll stock, and the

IPR2024-00299
Nespresso USA, Inc. Ex. 1029
Page 31 of 57

Fig. 13-23. Typical thermoformed blister packaging and box inserts, unusually formed to the shape of the product to be packaged. (*Courtesy Lyle Industries, Inc.*)

various functions are performed simultaneously at a sequence of stations in-line.

Form/fill/seal equipment is widely used, in which a package is formed, immediately filled with the product to be packaged (in some cases, a liquid product also can be used as a pressure medium to assist in forming), and then sealed. Because aseptic features are required for machines of this type, all operations generally are enclosed in pressurized sterilized air chambers.

MATERIALS

The thermoplastic material used for thermoforming is one of the most important factors in the process. The properties and characteristics of a particular material will determine its thermoforming qualities. As the thermoforming process has become increasingly important, the emphasis of extruders has turned to producing sheet specifically to meet the demands of thermoforming markets (i.e., multilayer barrier materials for shelf-stable food packaging or larger sheet for the production of products such as boats, pallets, signs, siding for houses, etc.). Current maximum dimensions for thick sheet are limited by the presently available manufacturing facilities (sheet up to 10 feet wide × 14 feet long). But some manufacturers will purchase a thicker sheet than required and "stretch" it with a thermoformer to obtain a larger mold area (i.e., swimming spas). Future mold sizes may be almost unlimited in this case. Thinner sheeting (produced by extrusion, calendering, or continuous casting) is available in rolls of several hundred feet in length.

Various modifications to the body or surface of the plastic sheet can be incorporated during the extrusion process to produce specialized effects. The modified material may be:

- *Coextruded*—in an increasingly popular process that affects the surface quality for a desired application, such as weather resistance, or impact/mar resistance; multilayers provide various "barrier" qualities for food packaging and "shelf-stable" items.
- *Flocked*—usually providing a velvetlike layer for decorative box inserts.

IPR2024-00299
Nespresso USA, Inc. Ex. 1029
Page 32 of 57

- *Textured*—so that it can provide a leather- or woodlike look and feel, or an engraved look.
- *Tinted*—providing translucent color.
- *Pigmented*—giving solid coloring.
- *Metallized*—shiny and mirrorlike; here the material is difficult to thermoform because of the sheet's reflectiveness to radiant heat and thinning upon stretching.
- *Filled*—enabling cost reduction, as well as enhancement of physical qualities (i.e., improving rigidity; increasing impact resistance).
- *Foamed*—a type popular in fast-food packaging because of heat-insulating qualities; this modification is a resin-extender, making it cost-effective. (See Fig. 13-24.)

Two of the fastest-growing areas for thermoforming today utilize composites/engineered materials and polypropylene.

Engineered materials and composites are very popular in the automotive body panel and aerospace component markets because of high structural strength and flame resistance. New developments in thermoforming equipment are making thermoforming a viable and cost-effective alternative to blow molding and injection molding.

More competitive pricing of polypropylene in the last few years has made it the most cost-effective resin for the booming microwavable-container market. Resin suppliers are taking giant steps to produce more thermoformable polypropylene for processors with conventional melt-phase forming equipment. (See below, section on thermoforming of coextruded structures and other special materials.)

Let us now note some of the unique characteristics and properties of thermoplastic sheets that must be taken into account when considering thermoforming.

Plastic Memory

Most thermoplastics possess enough elasticity when they are hot that when stretched, by mechanical or pneumatic means, they tend to draw tight against the force that stretches them and to stretch uniformly. These characteristics permit forming against a single mold, which is a common practice in many thermoforming methods (as distinguished from matching male and female molds, used in most other plastic processing techniques). Reheating a formed part to the original forming temperature will activate the so-called plastic memory and cause it to relax back toward its original shape (i.e., a flat blank). Hence, errors in the contours of formed parts often can be corrected by re-forming. It also is possible to decorate a formed part, then relax it back to the original flat, and use the "distorted" pattern to print subsequent sheets "in distortion." The printed sheets can then be formed into products in which the decorative elements will be in perfect register on the three-dimensional surface.

Hot Elongation or Hot Strength

All thermoplastic sheet materials can be stretched when hot, but this property varies greatly with different materials, and under different conditions, and it is measurable. It is intimately related to temperature and to speed of elongation, and, in many of the methods described earlier, it is of critical importance. Because of its dependence on the correct temperature, methods of heating, methods of stretching or forming, choice of material for molds, and related methods of cooling on the mold, hot strength is referred to frequently.

Some commercial sheet stocks can be stretched as much as 500 or 600% over their original area; others stretch as little as 15 to 10%. Naturally this characteristic has a great influence on what shapes can be produced and the quality of what is produced.

Some materials at forming temperatures become almost puttylike and respond to a minimum of pressure, either pneumatic or mechanical, in such a way as to pick up every detail of the mold. Others exhibit strong resistance, and thus require heavier equipment and tools. The limited differential of pressure available in vacuum methods may not suffice to provide small details in some formed articles. In such cases, compressed air can be added.

This property is somewhat related to the

IPR2024-00299
Nespresso USA, Inc. Ex. 1029
Page 33 of 57

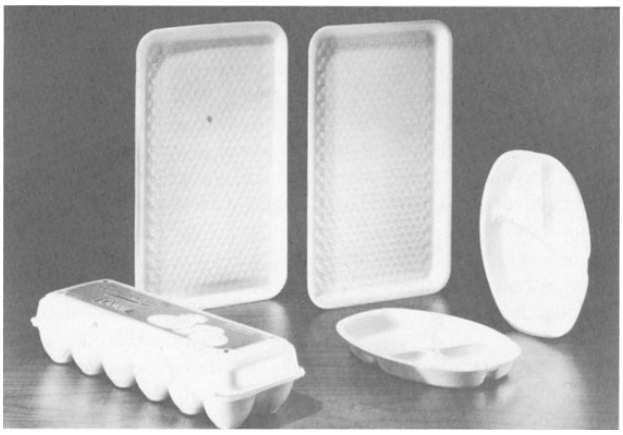

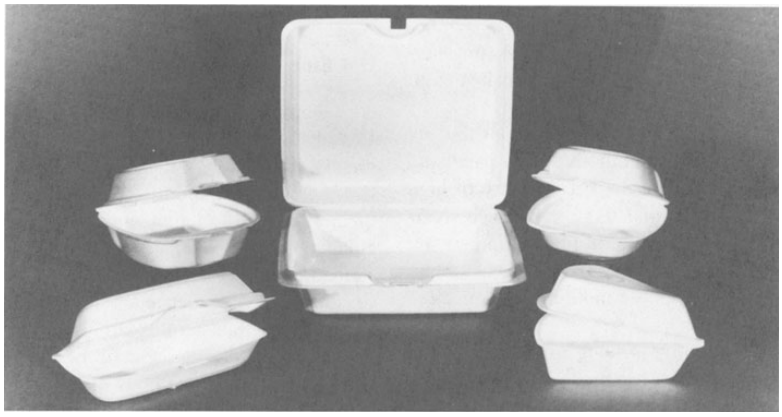

Fig. 13-24. Typical thermoformed foam products (fast-food packs, meat trays, egg cartons, and dinnerware) provide protection to the product as well as cost-effective packaging and heat-sealing qualities. (*Courtesy Brown Machine, Div. John Brown*)

ability to be stretched while hot, but does not run parallel to it. The hot strength of thermoplastics varies dramatically with temperature changes, but very little with gauge variations.

Temperature Range for Forming*

Amorphous thermoplastics (ABS, acrylic, styrene, polycarbonate, and vinyl, for example) do not have melting points. Their softening with increase of temperature is gradual, and each material has its own range of specific processing temperatures. Selection of the forming temperature comes by knowing the degradation temperature and then determining the highest temperature *under* that where the sheet has enough "hot strength" to handle and still form properly.

Crystalline thermoplastics, such as polyethylene, polypropylene, and nylon, have sharp melting points. Unfortunately, most of the forming temperatures are the same as the melting temperatures. Polypropylene should be

*By William K. McConnell, Jr., McConnell Co., Inc., Fort Worth, TX.

IPR2024-00299
Nespresso USA, Inc. Ex. 1029
Page 34 of 57

heated to 330°F for the proper thermoforming temperature; however, regular grades *melt* at 330°F. Special grades and modifiers have been developed recently to give good hot strength at these temperatures.

Table 13-1 shows the processing temperature ranges for the thermoforming of some popular thermoplastic materials.

Thermoforming Processing Temperatures (see Table 13-1).

1. *Mold and Set Temperature*. The set temperature is the temperature at which the thermoplastic sheet hardens and can be safely taken from the mold. This is generally defined as the heat distortion temperature at 66 psi (455 kPa). The closer the mold temperature is to the set temperature without exceeding it, the less one will encounter internal stress problems in the part. For a more rapid cycle time, if post-shrinkage is encountered, post-cooling fixtures can be used so that parts may be pulled early.

2. *Lower Processing Limit*. This column shows the lowest possible temperature for the sheet before it is completely formed. Material formed at or below this limit will have severely increased internal stress that later can cause warpage, lower impact strength, and other poorer physical properties—another reason for rapid vacuum or forming pressure.

The least amount of internal stress is obtained by a hot mold, hot sheet, and very rapid vacuum and/or compressed air.

3. *Orienting Temperatures*. Biaxially orienting the molecular structure of thermoplastic

Table 13-1. Thermoforming processing temperature ranges.

	1. Mold and set temperature		*2. Lower processing limit*		*3. Orienting temperature*		*4. Normal forming (core) temperature*		*5. Upper limit*	
Material	*°F*	*°C*	*°F*	*°C*	*°F*	*°C*	*°F*	*°C*	*°F*	*°C*
ABS	185	85	260	127	280	138	300	149	360	182
Acetate	160	71	260	127	280	138	300	149	360	182
Acrylic	185	85	300	149	325	163	350	177	380	193
Acrylic/PVC (DKE-450[2])	175	79	290	143	310	154	340	171	360	182
Butyrate	175	79	260	127	275	135	295	146	360	182
Polycarbonate	280	138	335	168	350	177	375	191	400	204
Polyester, thermoplastic (PETG[3])	170	77	250	121	275	135	300	149	330	166
Polyethersulfone	400	204	525	274	560	293	600	316	700	371
Polyethersulfone, glass-filled	410	210	535	279	560	293	650	343	720	382
Polyethylene, high-density	180	82	260	127	270	132	295	146	360	182
Propionate	190	88	260	127	270	132	295	146	360	182
Polypropylene	190	88	265	129	280	138	310–330	154–166	331	166
Polypropylene, glass-filled	195	91	265	129	280	138	400+	204+	450	232
Polysulfone	325	163	374	190	415	213	475	246	575	302
Styrene	185	85	260	127	275	135	300	149	360	182
Teflon (FEP[1])	300	149	450	232	490	254	550	288	620	327
Vinyl, rigid	150	66	220	104	245	118	280–285	138–141	310	154
Vinyl, rigid foam	162	72	240	116	260	127	300	149	350	177

Registered trademarks: [1]DuPont, [2]Polycast Corp., [3]Eastman
Courtesy of William K. McConnell, Jr.; McConnell Co., Inc., Fort Worth, TX.

IPR2024-00299
Nespresso USA, Inc. Ex. 1029
Page 35 of 57

sheet approximately 275 to 300% at these temperatures and then cooling greatly enhances properties, such as impact and tensile strength. Careful matching of heating, rate of stretch, mechanical stresses, and so on, is required to achieve maximum results.

In thermoforming oriented material, good clamping of the sheet must be used. The sheet is heated as usual to its proper forming temperature and thermoformed. The hot forming temperatures do not realign the molecular structure; therefore, the better properties of the oriented sheet are carried into the finished part.

4. *Normal Forming Temperature*. This is the temperature that the sheet should reach for proper forming conditions under normal circumstances. *The core (interior) of the sheet must be at this temperature*! The normal forming temperature is determined by heating the sheet to the highest temperature at which it still has enough hot strength or elasticity to be handled, yet below the degrading temperature.

5. *Upper Limit*. This is the temperature at which the thermoplastic sheet begins to degrade or decompose. It is crucial to ensure that the sheet temperature stays below this value. When radiant heat is used, the sheet surface temperature should be carefully monitored to avoid degradation while waiting for the "core" of the material to reach forming temperature. These limits can be exceeded, if for a short time only, with minimum impairment of the sheet properties.

HEATING

Provided that the thermoplastic sheet used meets specifications, the next most important factor in thermoforming is proper heating. The sheet must be heated precisely and uniformly from surface to core, except when profile or area heating is required, to obtain proper material distribution.

Heat demands energy; in fact, in the thermoforming process, the heating phase can consume up to 80% of the total energy demand. It is important to determine the most cost-effective method of heating, depending on the material, product specifications, and desired cycle speeds. There are three methods of heating: (1) convection heating, which circulates hot air; (2) contact heat (heated plates come in contact with the sheet); and (3) radiant heat (radiant energy is transmitted between the heater and the sheet). Far infrared gas-fired and electric heaters are made with accurate controls to produce even overall heat. Most heating now is done by far infrared radiant heat rather than air recirculating ovens, which were used more in the past.

Types of radiant heater elements include tubular rods (often called Calrod heaters), flat strip heaters, quartz heaters, and ceramic heaters. Tubular rods are the most widely used today. However, ceramic heating elements are becoming very popular, despite their higher initial cost compared to tubular rods, because of their longer wear and profitability. (See Table 13-2 and Fig. 13-25.)

Temperature Control

The thermoforming process demands precise controlled heating to ensure quality and repeatability from cycle to cycle. Two considerations are the temperature output rate of the heater elements and the time exposure of the sheet to the heat. Lower heat levels slow down cycle rates, but can improve forming conditions and final product outcome.

All heating elements must have a means of control, whether it be a simple on/off switch or a thermostat. A device offering more control is the percentage timer, which relays predetermined on/off settings to the heating elements.

For more precise temperature controls, thermocouples are used, which actually sense the temperature and activate the on/off control or a more complicated electronic relay system. Proportional controls provide variable power inputs—increasing up to setpoint temperatures, then decreasing power input proportionately. Solid-state relays offer even more control than this.

The ultimate controller today is the microprocessor. Precise and accurate temperature readings are made automatically by the system, calculated in accordance with the acceleration and deceleration deviations, and adjustments are made accordingly to bring the sheet to the setpoint temperature. (See Fig. 13-26.)

IPR2024-00299
Nespresso USA, Inc. Ex. 1029
Page 36 of 57

Table 13-2. Descriptions of most popular heating elements.

Type of heating element	*Efficient when new*	*Efficiency after 6 mo.*	*Average life*	*Comments*
Small-diameter coiled nichrome wire	16–18%	8–10%	1500 hr	Cheapest initially; very inefficient, heat nonuniformly with use.
Tubular rods and metal panels	42%	21%	3000 hr	Less expensive than ceramic or quartz panels, but heat not as uniform and profiling more difficult*
Ceramic panels	62%	55%	12,000–15,000 hr	Uniform heat; efficient—ideal for profile heating. More expensive than tubular rods.*
Quartz panels	55%	48%	8000–10,000 hr	
Gas-fired infrared	40–45%	25%	1000–6000 hr	Cheapest to operate but *many disadvantages*; very difficult to maintain uniform heat.

*Product application determines the most efficient heating element choice in order to accomplish required forming specs.

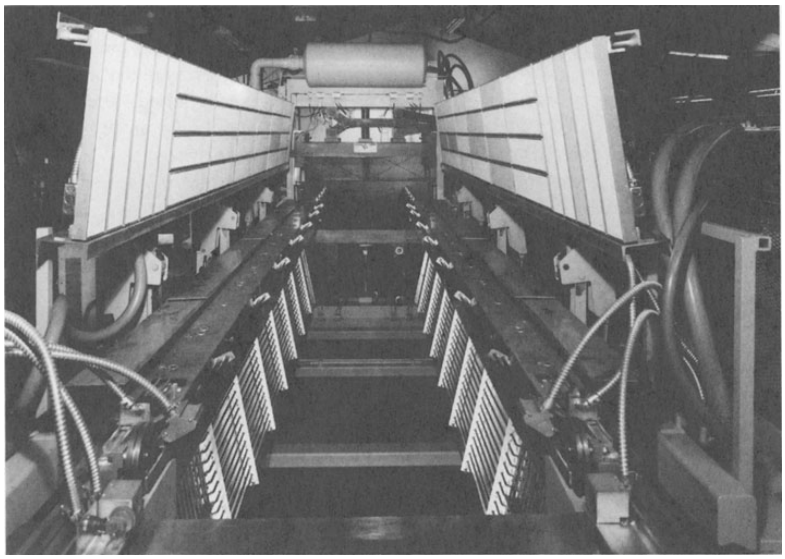

Fig. 13-25. Roll-fed thermoformer oven configuration shows quartz panel elements on top, Calrod elements on bottom. (*Courtesy Lyle Industries, Inc.*)

Fig. 13-26. Microprocessor control provides precise and accurate temperature readings automatically, adjusting accordingly to bring sheet to the setpoint temperature. (*Courtesy Brown Machine, Div. John Brown*)

With the microprocessor, the ultimate in repeatability from cycle to cycle can be achieved, as well as on-screen readouts of oven functions.

VACUUM/AIR PRESSURE

During the thermoforming process, in order to form plastic sheet into a desired shape and force the material to follow the contours of the mold, one or a combination of these forces must be used: vacuum, pressure, or matched molds. The method chosen depends on the product size, quantity of products to be made, and cycle speeds desired.

Basic *vacuum forming*, the oldest method of thermoforming, relies on the sheet's self-sealing ability and evacuation of trapped air by applying vacuum. Natural atmospheric pressure fills the mold cavity, forcing the heated sheet into the evacuated space. A vacuum pump is necessary in this process.

Pressure forming is faster than vacuum forming and provides a more clearly defined detail on finished parts than straight vacuum forming. Furthermore, some materials require the faster forming method (e.g., oriented polystyrene/OPS). High air pressure is used, thus requiring molds capable of withstanding the pressures applied. Also, a sealable pressure chamber is needed, as well as equipment capable of withstanding the pressure forces. An ample supply of pressurized air with uniform pressure levels is required. The compressed air system must supply *dry* air to prevent machinery and mold damage.

Matched metal forming requires sufficient driving force of the platens, proper cavity air evacuation, and a realization of the depth-of-draw limitations. This process resembles compression forming.

Combination Vacuum/Air/Mold Forming. Today matched molds only have to be similar to each other. The female mold is precise with respect to the finished part. The male mold need only be similar to the female in order to assist or push softened plastic sheet into the female cavity—preforming it. These preforming molds are called plug assists. After the sheet is forced into the female mold, vacuum and/or air pressure is applied to finalize details of the formed part in the mold. This method allows adjust-

ments to easily be made in air pressure, vacuum, mold closing speeds, and so on, to form a better part.

TOOLING

Tooling for the thermoforming process must combine well-designed molds with excellent temperature control and cooling efficiency to produce economical, good-quality parts.

The design of the form tooling is of utmost importance. A decision must be made about using male or female molds, depending on product detail, critical tolerances, undercuts, or product output requirements. Molds can be constructed of wood, epoxy, or polyester for prototype or short runs—or can be the preferred aluminum molds incorporating accurate temperature and vacuum and/or air-pressure control.

The tool design engineer must realize that wall thickness in the finished article will be reduced from the original sheet thickness in reverse proportion to the increase in area of the formed piece over the area of the original sheet. Proper air and/or vacuum passages are critical to the quality of finished products. Fast, complete, and continuous vacuum is a key factor in successful thermoforming. Another key is mold temperature control through air tubes or chambers.

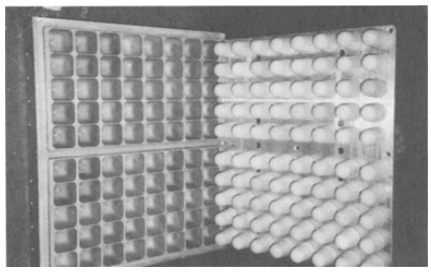

Fig. 13-28. Multicavity female tooling with syntactic foam male plug assists. (*Courtesy Future Mold, Inc.*)

Unique tool design may incorporate engraving, hinges, and moving cores to produce logos, texture, ribs, and bosses. Different mold inserts may be installed in a mold base to accommodate a variety of products (see Fig. 13-27).

Plug assists, discussed above, usually are made of metal and heated to a temperature slightly below that of the hot plastic, so as not to cool the stock before it can reach its final shape. Instead of metal, today many processors use plugs constructed of syntactic foam (see Fig. 13-28). Also, wood or thermoset plastics such as phenolic or epoxy are used. These materials are poor conductors of heat and thus do not withdraw much heat from the sheet stock.

The formed part must be cooled in the mold so that it holds its new shape. The cooling time

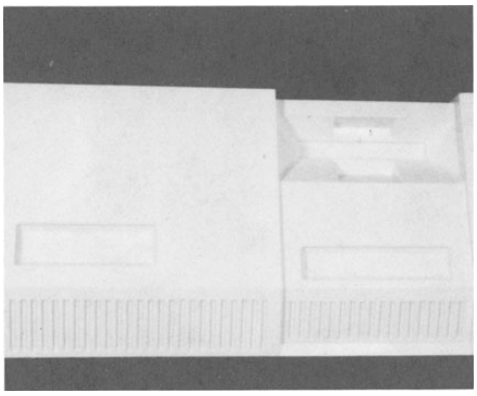

Fig. 13-27. Tooling configuration can produce various effects. Computer housing shown here incorporates textured effect, ribs, cutaways. (*Courtesy CAM/Central Automated Machinery, Inc.*)

will affect the total cycle time, but critical cooling temperature variances must be controlled to avoid unacceptable "chill marks" in the finished product.

Trim tooling is discussed in the following section.

TRIMMING

Unlike injection molding, 90% of thermoformed parts undergo some type of trimming operation. Because a sheet of material must be clamped on its edges to allow stretching of the sheet into a shape, edge trim must be removed. In the forming of multiple parts (e.g., cups or plates) a space is allowed between molds for clamping, leaving a skeleton-like web after the parts are trimmed or punched out. The reduction of edge trim or space trim could greatly affect the overall manufacturing costs, as an average trim scrap factor in thermoforming is 10 to 20%.

High-speed roll-fed thermoformers usually are run in-line with a high-speed trim press (see Fig. 13-29). Synchronized to the output of the thermoformer, this equipment can be microprocessor-controlled, and can incorporate parts ejection for deep draw parts, packing tables, stackers, and counters, or utilize downstream equipment such as packaging equipment and/or lip rollers. Scrap granulators are often placed under the press (see Fig. 13-30).

Trim tooling incorporates punches and dies. The web of formed parts is threaded into the trim press, either manually or automatically. From that point on, the press trims and ejects parts as the machine forms and ejects webs of parts.

Trim-in-place thermoforming machines are becoming more popular, where trimming takes place in the form station. This is especially desired in forming exotic, multilayer, barrier, or polypropylene materials. (See below.)

Steel-rule die trim stations are incorporated into many thermoforming machines to provide forming and trimming in one unit. Although not so fast and accurate as an off-line trim press, this is desirable for many nonfood items such as horticultural trays, box inserts, and blister packaging (see Fig. 13-31).

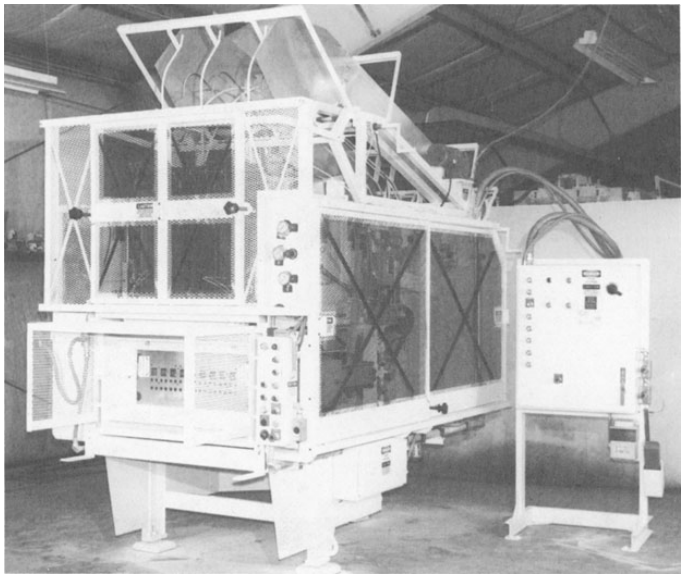

Fig. 13-29. New trim press developments provide increasing speed and trim accuracy through preloaded linear bearings and electric motor-driven fine tuning. (*Courtesy Lyle Industries, Inc.*)

IPR2024-00299
Nespresso USA, Inc. Ex. 1029
Page 40 of 57

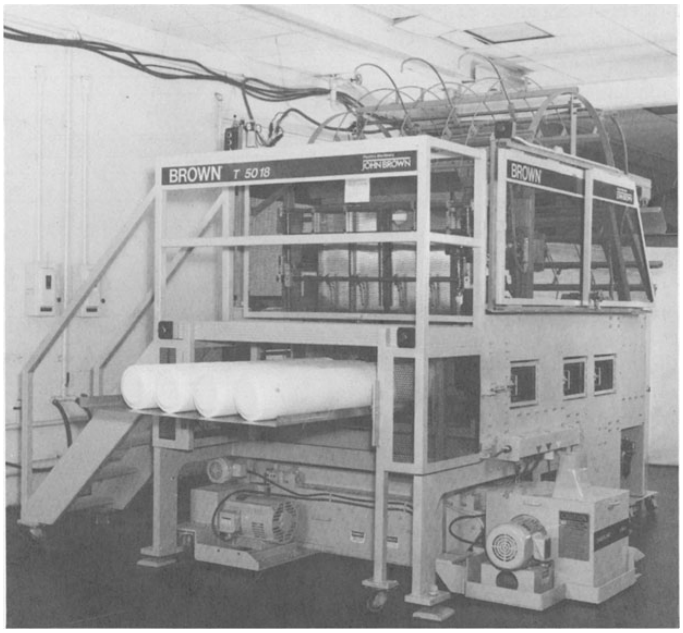

Fig. 13-30. High-speed trim press shown incorporates four-row parts table and under-the-press granulator. (*Courtesy Brown Machine, Div. John Brown*)

Fig. 13-31. Typical steel-rule die trimmed parts where trim tolerances are not very critical and high-speed production is not a major factor. Usually the forming and trimming are accomplished in one unit. (*Courtesy Lyle Industries, Inc.*)

Trimming of cut-sheet parts usually is done off-line. New methods include robotics, lasers, and high-pressure water-jet systems. Other methods are routing and drilling, sawing, hot-wire, and deburring. New equipment developments are providing automated parts handling to an automated trimming station.

The method most often used in trimming (and punching) large, high-production, relatively flat articles, such as refrigerator door liners, requires handling by the operator, who places the untrimmed piece into a press, activates it through the cycle, and then removes the article and the trim scrap. This will be described more fully under equipment and tools.

Tools for trimming are described below:

- *Shear Dies.* These are the obvious tools for trimming large production runs of large articles if they are trimmed on a single level. These dies are built as if they were intended to trim metal articles, are mounted on die shoes, and are operated in metal-working presses. Some plastics require quite close tolerances between die members. The power required is about one-third of that required to shear mild steel of equal thickness. (See Fig. 13-32a.)
- *Steel-Rule Dies.* These are made of strip steel about $\frac{3}{32}$ inch thick and 1 inch wide, with one sharpened edge. The strips are formed to the shape of the trim line, and held to that shape by birch die stock. They are practical in small to medium runs, and for most thermoplastics in thin to medium thicknesses. Some of the more brittle plastics can be cut by this process only when warm, before they have cooled after forming, or by post-heating the part or the die. (See Fig. 13-32b.)
- *Walker Dies.* These dies are known also as envelope dies or high dies. They are a heavy-duty version of the steel-rule dies, in that they are forged to about $\frac{5}{16}$ inch thickness, and they are available up to 4 inches high, and thus may provide clearance for projections in the article to be trimmed.
- *Planetary Dies.* These dies provide for side motion and they progressively shear vertical flanges on the respective sides of an article. They require special machines. (See Fig. 13-32c.)

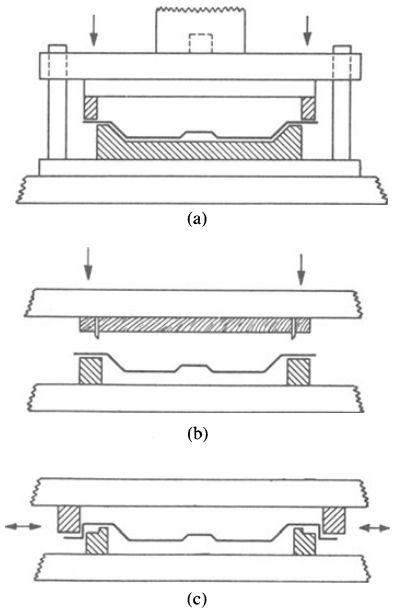

Fig. 13-32. Methods of trimming.

- *Machinery for Trimming.* It is obvious that tools similar or identical to those used in metal work should be used on the same type of equipment regardless of material. Therefore, trimming of plastics often is done on punch presses, press brakes, and other toggle-action machines. Hydraulic presses are entirely satisfactory, and frequently are moved into the forming area so that the operator who runs the forming machine is able to trim articles jut formed, within the duration of the next forming cycle.

The special contour dies such as the steel-rule and envelope types are used on clicker and dinker machines such as those used in the leather industry, on continuous or clutch-type toggle presses, and on hydraulic presses.

Saws are used for many operations where a vertical flange is to be trimmed. A radial-arm type is readily adjustable, and direct drive yields appropriate blade speed. If articles are registered from the table area, clearance beneath the saw blade can be provided. Bandsaws in both vertical and horizontal positions are efficient in trimming hat-shaped parts. Wood-

IPR2024-00299
Nespresso USA, Inc. Ex. 1029
Page 42 of 57

shaper machines also are used, but are not so adaptable.

Problems of Shrinkage

Mold shrinkage occurs not only when the article is removed from the mold, but during a considerable period after removal. Therefore it is important, especially with large items that go into precise assemblies, that all trimming be done on schedule. If it is most practicable to trim as the article is removed from the mold, a shrinkage factor must be built into the trim die. If it is desired to "build a bank" of parts, a different factor must be experimentally determined. A "no-shrink" die for trimming large articles probably is practicable only after an overnight cooling period.

Trimming in the Mold

This innovation makes it possible to trim formed articles at the forming station. One method of trimming-in-place incorporates a knife edge around the periphery of the forming die and a movable heated ring directly over the die. After the object is formed in the conventional manner, but before it is cool, the heated ring drops down and presses against the knife edge in the mold and pinches the part from the web. The process may also work in reverse by placing a heated knife edge on the upper platen and bringing it in contact with the sheet against a flat mold surface. The problem with this method is that plastic may build up on the trimmer and reduce its effectiveness.

Another method uses shearing dies, which either punch a section of sheet that is then carried into the mold and formed, or trim the finished part before it is removed from the mold. These techniques are complex and require expensive tooling.

CONTROL

Manual-Control Equipment

Although complex, automated equipment is used for production forming, the need for economical prototype and short-run production of plastic parts has created markets for manual-control thermoforming machines. These machines also are often used to augment production equipment by enabling research and development of molds and techniques for use in high-speed production equipment.

With these machines, techniques for proper forming are developed to test tooling and various types of materials considered for use in the final production item. The relative cost of such machines enables the manufacturer to complete testing without interruption of normal production on the assembly line.

This type of equipment also is adaptable for educational purposes. There are presently hundreds of schools teaching plastics with R&D-type thermoformers.

Automation

Manufacturers of thermoforming machines have utilized technological advances in automation to produce machines for efficient performance, where each phase of the thermoforming process is accurately controlled. Automation can mean a single temperature-controlling device that maintains the sheet temperature at a given setting, but it also can mean a sophisticated system that controls all functions of extruding, thermoforming, and finishing.

Most thermoformers reach a compromise between these extremes to create a balance of the initial cost, man-hours, the need for technical skills, material costs, and maintenance, along with production output and production expense. These factors determine the equipment needed to enter a competitive area of mass production.

Some automated thermoforming equipment is designed to automatically control all thermoforming functions in a timed sequence. Thus, after the operator initiates the cycle, the machine functions on preset programming. (See Fig. 13-33.)

This programming generally includes:

1. Actuation of a clamping frame to hold the sheet during forming.

IPR2024-00299
Nespresso USA, Inc. Ex. 1029
Page 43 of 57

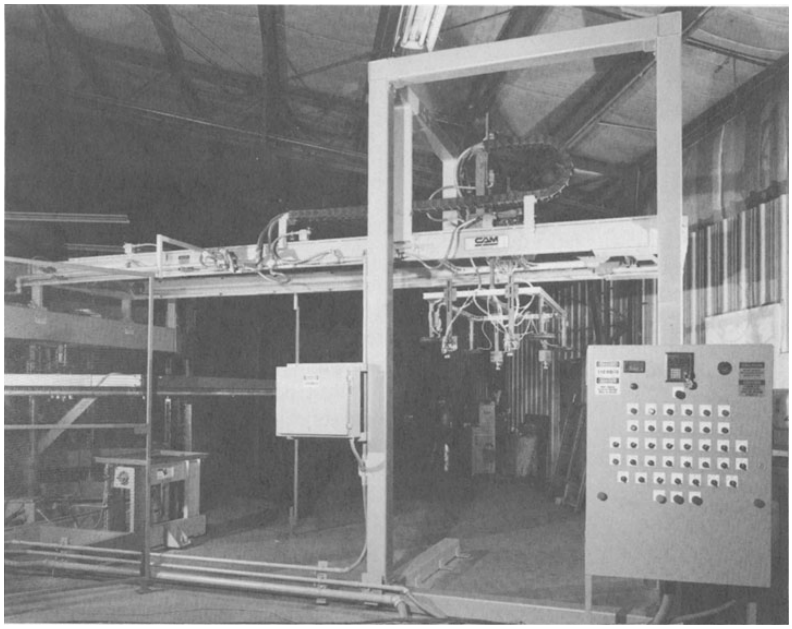

Fig. 13-33. Automated load/unload system places cut sheet onto a lift table. Upon completion of the forming process, the system automatically picks up the formed part and transports it to an awaiting conveyor for downstream trimming and finishing operations. (*Courtesy CAM/Central Automated Machinery, Inc.*)

2. Movement of the clamped plastic sheet to the heater section.
3. Application of controlled far infrared radiant heat in a timed cycle.
4. Movement of the heated sheet to the forming station.
5. The forming sequence. This portion of the forming cycle includes several sequenced and timed operations, depending on the thermoforming technique utilized. Automated controls include:
   (a) Platen movement to position. Top and bottom platens may move independently or in unison or by sequenced stages.
   (b) Air and/or vacuum pressure applied from either or both platens independently, in unison, or in sequence.
   (c) Cooling of the formed part through the mold and/or by convection.
   (d) Breaking the seal between the mold and the formed part.
   (e) Removal of the mold from the formed part.
6. Movement of the formed part by cut-sheet machines to the unloading–load station.
7. In roll-fed equipment, movement of the formed web into a trimming press intermittently in synchronization with the thermoformer.

Control Systems

Various systems are available to provide automated control:

Microprocessor Control. In today's thermoforming world, microprocessors are a desired means of control. Repeatability of operations from cycle to cycle and accurate control of all functions are essential. (See Fig. 13-34.) Preprogrammed setups can decrease cycle times, scrap, and labor. Processing conditions

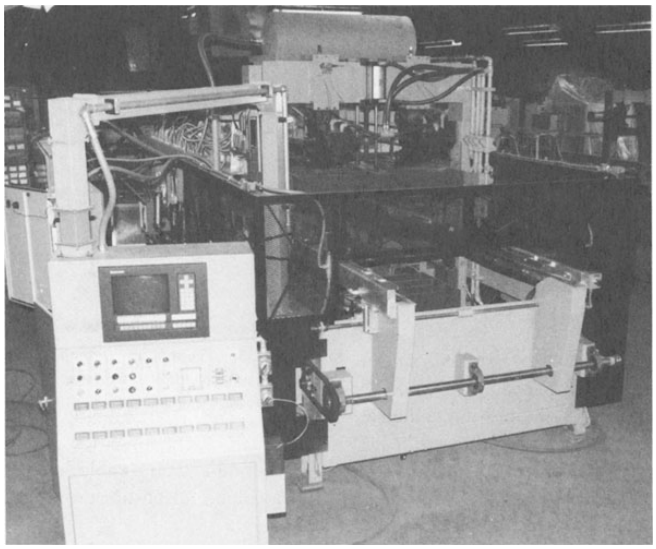

Fig. 13-34. Thermoformer with microprocessor control provides repeatability of operations from cycle to cycle. Productivity is increased by preprogrammed setups and automated adjustment of processing functions during operation. (*Courtesy Lyle Industries, Inc.*)

are continually readjusted during operation to keep unacceptable product from being formed.

Although the initial cost of microprocessor control is high, the productivity savings can defray that initial investment over a short period of time.

PLC (Programmable Logic Controller). The PLC system is an up-and-coming means of computer control. Providing the same capabilities of repeatability, programmed operation, and increased productivity as a microprocessor system, the PLC has several advantages. Because a PLC uses ladder logic, less technically trained people are required, and troubleshooting is simplified. A microprocessor system uses computer language.

A disadvantage of the PLC is its high initial cost. Its capabilities for high-speed production requirements are less than that of a microprocessor. However, with the advances being made in the industry, we may soon see networking, with a PLC as a master control and microprocessors performing certain functions of the process—thus, combining the best of both worlds.

Electro-Mechanical Control. The oldest method of automatic control in thermoforming equipment is the electro-mechanical system. Multiple relays, individual timers, and limit switches initiate successive steps in the sequence. This method is used by a small percentage of thermoformers performing simple, nondemanding operations.

The sequence operation must be selected by an arrangement of toggle switches or multiplexers. Limit switches and operating cams are adjusted to provide interlocking of various functions such as platen advance and speed, vacuum bleed, and air blow. Safeguard features such as fully retracting platens and material clamp frame positions can be included. This system can use timers to monitor the duration of each stage of the thermoforming cycle. With these adjustments, the machine is now ready to operate in the production of the desired article; however, should a change in

IPR2024-00299
Nespresso USA, Inc. Ex. 1029
Page 45 of 57

forming technique be required, the entire procedure of switching and adjusting must be repeated.

The end result is that this method of control is somewhat cumbersome and slow, requiring a proficient, experienced operator to set up the equipment. Its advantages include a relatively low initial cost.

THERMOFORMING OF COEXTRUDED STRUCTURES AND OTHER SPECIAL MATERIALS*

Thermoforming of many new materials such as coextruded multilayer barrier structures or CPET (crystallized polyethylene terephthalate) requires unique machinery features to ensure proper forming characteristics.

Important considerations for the proper heating of these materials to avoid wrinkling and deformation of formed product include: (1) zoning, (2) the preheat station, (3) precise oven temperature control, (4) oven length, (5) sheet sag control, (6) sheet tempering prior to forming, and (7) sheet transport through the oven, into the form station.

For the new materials, oven temperature control and oven length are the major considerations. In solid-phase forming, special ovens are required to keep the sheet flat. In melt phase forming, sheet support or special platen travel is required to handle sag. With that in mind, ideally a customer would desire to have an oven that is completely versatile in its zoning and its ability to profile across the sheet and with the sheet in the sheet direction.

This can be achieved in more than one way. An oven can be fitted with Calrod, ceramic, or quartz panel heaters, or any combination of these. Preferably, the oven will have zoning capability across the sheet and in the sheet direction—in particular, an arrangement that does not limit one to small increments, as with ceramic heaters. A bottom oven combination, of hot air convertible for sheet support and a standard heated oven, is an ideal all-purpose arrangement. (See Figs. 13-35 and 13-36.)

The length and the zoning of the oven must be accurate and adjustable, using the best control available to ensure proper material orientation.

*By G. E. Schwartz, President, Lyle Industries, Inc., Beaverton, MI.

Fig. 13-35. Thermoformed food trays and containers represent only a portion of the broad range of microwavable CPET products requiring unique machine characteristics. (*Courtesy Lyle Industries, Inc.*)

Sheet conveyance control is another important consideration. Electronic index and sheet transport rails are designed for the demanding job of conveying tough materials, up to 125 mil thick, absorbing extraordinary or high stresses when the material is shrinking and pulling, and minimizing chain rail sag and deflection.

Special form station requirements must be taken into consideration for coining and trim-in-place.

Solid-phase forming or close-to-solid-phase forming requires clamping stations that will offer the higher tonnages required (wide bed equipment) and prevent platen alignment deflection as the coining rings are compressed. A standard toggle machine does not do this well; there can be too much clearance built up in all the links and bushings of the toggles. This ultimately leads to short trim-in-place tool life. The ideal forming station will offer extreme rigidity with multiple sequencing functions that will allow for precise coining, trim, and plug speed control as independent adjustments.

COOLING REQUIREMENTS OF THE THERMOFORMING PROCESS

Heat transfer is a fundamental element of plastics processing. In a variety of plastics pro-

*By Mark C. Stencel, AEC, Inc., Wood Dale, IL.

IPR2024-00299
Nespresso USA, Inc. Ex. 1029
Page 46 of 57

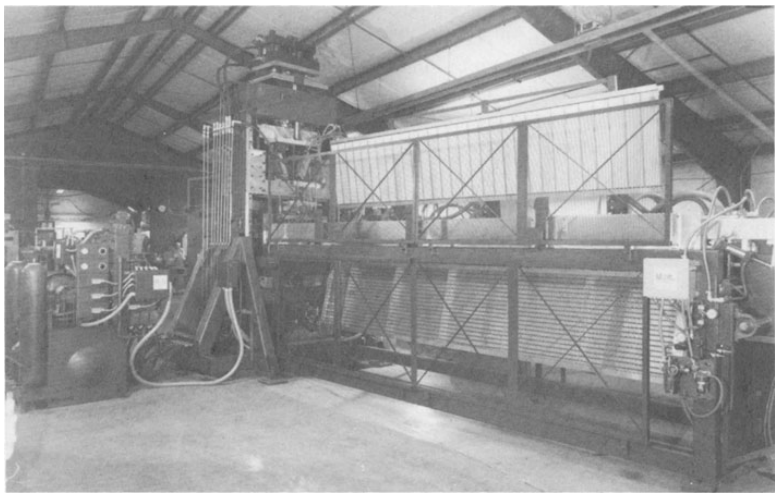

Fig. 13-36. Thermoformed food trays and containers represent only a portion of the broad range of microwavable CPET products requiring unique machine characteristics. (*Courtesy Lyle Industries, Inc.*)

Table 13-3. Thermoforming process parameters.

Material	*Typical starting temperature (°F)*	*Typical finish temperature (°F)*	*Specific heat (Btu/lb × °F)*
HDPE/LDPE	310	120	.83
PP	330	120	.72
PS	300	110	.41
PVC	295	110	.24

cesses, heat is transferred from plastic material (typically by a recirculating water system) to induce its conversion from a liquid to a solid state. The thermoforming process has unique characteristics, specifically less extreme material temperatures than extrusion or injection molding, which one must understand to successfully apply or design a cooling system for its requirements.

The heat transfer requirements for solidification of a plastic material are most easily defined by considering four critical parameters: the start temperature (°F) for the material, its the finish temperature (°F), the rate at which the material is to be processed (lb/hr), and an inherent physical characteristic of the material, specific heat (Btu/lb × °F). The equation used to express the relationship of these parameters in the definition of a cooling load is:

$$(\text{Start temperature} - \text{Finish temperature}) \times \text{Rate} \times \text{Specific heat} \times \text{Safety factor} = \text{Load (Btu/hr)}$$

A typical value used for the safety factor is 1.2. Other typical parameter values utilized for the thermoforming process are as shown in Table 13-3.

For example, to consider the thermoforming of 300 lb/hr of polypropylene, one could calculate the cooling load as follows:

$$(330 - 120)\ °\text{F} \times 300\ \text{lb/hr} \times .72\ \text{Btu/lb} \times °\text{F} \times 1.2 = 54{,}432\ \text{Btu/hr}$$

A chilled water ton is expressed as 12,000 Btu/hr; so the application of a 5-ton chiller should be considered.

IPR2024-00299
Nespresso USA, Inc. Ex. 1029
Page 47 of 57

It is important that vendors of cooling equipment be supplied with data on the highest processing rates anticipated from thermoforming equipment. Although cooling equipment design typically allows for low-load conditions, physical limitations restrict the effective operation of cooling equipment upon overloading.

SUBSTRATE THERMOFORMING

A special application for thermoforming utilizes a preformed substrate to which softened plastic material is bonded. This process is ideally suited to vinyl-covered dash panels, consoles, door panels, window surrounds, and furniture.

A dual-wheel rotary thermoformer is used whereby one wheel carries the heat-softened decorative material, and the other wheel carries the substrate—meeting at the form station where permanent bonding occurs.

The main rotary wheel usually consists of a load station, a preheat station, a final heat station, and a form station. The secondary wheel consists of a load/unload station, a heat station, and a form station.

Material cut to the proper length is placed into the main load station, and carried through the preheat and final heat stations and into the form station.

Meanwhile, a substrate (usually porous particle board or wood—or injection-molded plastic or metal in which vacuum holes have been incorporated) is loaded onto the secondary wheel. Then it is rotated into the heat station, where an adhesive that has been preapplied to the substrate is activated by heating. Next the wheel rotates the substrate into the form station simultaneously with the heat-softened vinyl or decorative covering material. Here vacuum and air pressure are applied to form a permanent bonding. The clamp frames open, and the covered part is carried on the secondary wheel back to the unload station.

As with any thermoforming equipment, many options are available, such as automatic loading/unloading, sheet cutting, a multiple sheet turret for material selection, multiple molds, a tilting load/unload table, and downstream equipment such as conveyors, trimming systems, and so on. A new thermoforming system (continuous shuttle/rotary system) incorporates roll-fed material that is being fed into a shuttle thermoformer, heated, and simultaneously bonded onto a substrate that has been loaded onto a secondary rotary wheel. As in the dual-wheel rotary, the formed part then is carried on the secondary wheel back to the unload station, while the shuttle sheet car returns to accept new sheet. (See Figs. 13-37 and 13-38.)

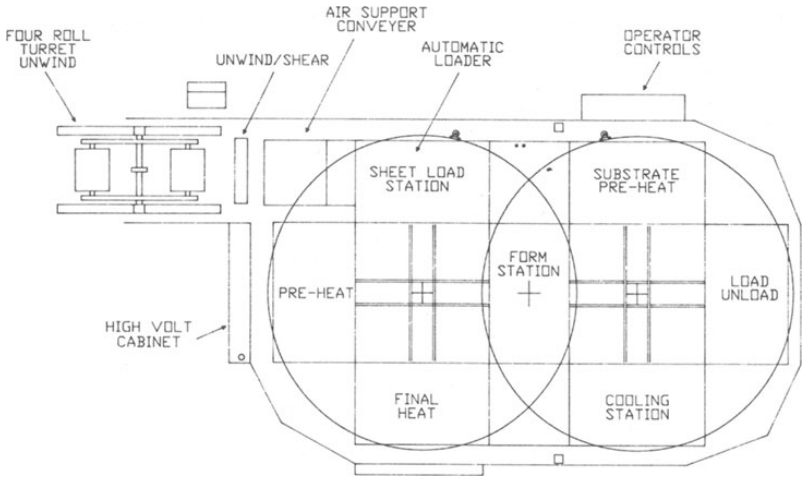

Fig. 13-37. Dual-wheel configuration for thermoforming decorative material onto a preformed substrate. (*Courtesy CAM/Central Automated Machinery, Inc.*)

IPR2024-00299
Nespresso USA, Inc. Ex. 1029
Page 48 of 57

Fig. 13-38. Car door panel produced on a dual-wheel thermoformer. Softened vinyl is formed and permanently bonded to a substrate in one operation. (*Courtesy CAM/ Central Automated Machinery, Inc.*)

TROUBLESHOOTING*

Checklist for Troubleshooting

Start troubleshooting by stopping the machine. Be sure that the sheet is not left in the oven (or if the oven retracts, be sure it is clear.) Look for any obvious problem. Review these potential causes before consulting the troubleshooting guide:

1. Pilot error
2. Mechanical problems
3. Sheet or film problems
4. Heating
5. Vacuum and/or compressed air
6. Controls and electrical systems

By William K. McConnell, Jr.; McConnell Co., Inc, Fort Worth, TX.

During troubleshooting and machine adjustments, change only one thing at a time.

Thermoforming Troubleshooting Guide

When the above investigation does not uncover the problem, start down the troubleshooting guide for an answer. The problems covered in the guide include:

1. Blister or bubbles.
2. Incomplete forming, poor detail.
3. Sheet scorched.
4. Blushing or change in color intensity.
5. Whitening of sheet.
6. Webbing, bridging or wrinkling.
7. Nipples on mold side of formed part.
8. Too much sag.
9. Sag variation between sheet blanks.
10. Chill marks or "mark-off" lines.
11. Bad surface markings.
12. Shiny streaks on part.
13. Excessive shrinkage or distortion of part after removing from mold.
14. Part warpage.
15. Poor wall thickness distribution and excessive thinning in some areas.
16. Nonuniform prestretch bubble.
17. Shrink marks on part, especially in corner areas (inside radius of molds).
18. Too thin corners in deep draws.
19. Part sticking to mold.
20. Sheet sticking to plug assist.
21. Tearing of part when forming.
22. Cracking in corners during service.

Troubleshooting Guide for Thermoforming

Problem	*Probable Cause*	*Suggested Course of Action*
1. Blisters or bubbles	A. Heating too rapidly	1. Lower heater temperature 2. Use slower heating 3. Increase distance between heater(s) and sheet
	B. Excess moisture	1. Predry 2. Preheat 3. Heat from both sides 4. Lower heater(s) temperatures 5. Do not remove material from moisture-proof wrap until ready to use 6. Obtain dry material from supplier

IPR2024-00299
Nespresso USA, Inc. Ex. 1029
Page 49 of 57

Troubleshooting Guide for Thermoforming (*Continued*)

Problem	*Probable Cause*	*Suggested Course of Action*
	C. Uneven heating	1. Screen for uniform heat by attaching baffles, masks, or screen 2. Check for heaters or screens out 3. Adjust individual heater temperatures for uniformity
	D. Wrong sheet type or formulation	1. Obtain correct formulation
2. Incomplete forming, poor detail	A. Sheet too cold	1. Heat sheet longer 2. Raise temperature of heaters 3. Use more heaters 4. If problem occurs repeatedly in same area, check for lack of uniformity of heat
	B. Clamping frame not hot before inserting sheet	1. Preheat clamping frame before inserting sheet
	C. Insufficient vacuum and/or compressed air	1. Check vacuum holes for clogging 2. Increase number of vacuum holes 3. Increase size of vacuum holes 4. Check for vacuum or air leak 5. Remove any 90° angles in vacuum system
	D. Vacuum not drawn fast enough	1. Use vacuum slots instead of holes where possible 2. Add vacuum surge and/or pump capacity 3. Enlarge vacuum line and valves avoiding sharp bends at tee and elbow connections 4. Check for vacuum leaks 5. Check vacuum system for minimum 25″ of Hg pressure
	E. Additional pressure needed	1. Use 20–50 psi air pressure on part opposite mold surface if mold will withstand this pressure 2. Use frame assist 3. Use plug, silicone slab rubber, or other pressure assist
3. Sheet scorched	A. Outer surface of sheet too hot	1. Shorten heat cycle 2. Use slower, soaking heat (lower temperature) 3. Move heater bands further from sheet
4. Blushing or change in color intensity	A. Insufficient heating	1. Lengthen heating cycle 2. Raise temperature of heaters
	B. Excess heating	1. Reduce heater temperature 2. Shorten heater cycle 3. If in same spot on sheet, check heaters

IPR2024-00299
Nespresso USA, Inc. Ex. 1029
Page 50 of 57

Troubleshooting Guide for Thermoforming (*Continued*)

Problem	*Probable Cause*	*Suggested Course of Action*
	C. Mold is too cold or hot	1. Heat mold or lower temperature
	D. Assist is too cold	1. Warm assist or use syntactic foam or felt covered plug
	E. Sheet is being stretched too far	1. Use heavier gauge sheet or more elastic, deep draw formulation 2. Change mold design 3. Change forming technique
	F. Sheet cools before it is completely formed	1. Move mold into sheet faster 2. Increase rate of vacuum withdrawal 3. Be sure molds and plugs are hot
	G. Poor mold design	1. Reduce depth of draw 2. Increase draft (taper) of mold 3. Enlarge radii
	H. Sheet material not suitable for job	1. Try different sheet formulation or a different plastic material
	I. Uncontrolled use of regrind	1. Control percentage and quality of regrind
5. Whitening of sheet	A. Cold sheet stretching beyond its temperature yield point	1. Increase heat of sheet; increase speed of drape and vacuum
	B. Sheet material dry colored	1. If above action won't correct, check with sheet supplier for availability of other types of coloring. Some colors do not lend themselves to dry or concentrate coloring 2. A hot air gun can be used to diminish or eliminate whitened surfaces on formed part
6. Webbing, bridging, or wrinkling	A. Sheet is too hot causing too much material in forming area	1. Shorten heating cycle 2. Increase heater distance 3. Lower heater temperature
	B. Melt strength of resin is too low (sheet sag too great)	1. Change to lower melt index resin 2. Ask sheet supplier for more orientation in sheet 3. Use minimum sheet temperature possible 4. Profile temperature of sheet
	C. Too much or too little sheet orientation	1. Have sheet supplier reduce or increase orientation
	D. Insufficient vacuum	1. Check vacuum system 2. Add more vacuum holes or slots
	E. Extrusion direction of sheet parallel to space between molds	1. Move sheet 90° in relation to space between molds
	F. Draw ratio too great in area of mold or poor mold design or layout	1. Redesign mold 2. Use plug or ring mechanical assist 3. Use female mold instead of male 4. Add take-up blocks to pull out wrinkles

IPR2024-00299
Nespresso USA, Inc. Ex. 1029
Page 51 of 57

Troubleshooting Guide for Thermoforming (*Continued*)

Problem	*Probable Cause*	*Suggested Course of Action*
		5. Increase draft and radii where possible 6. If more than one article being formed, move them farther apart 7. Speed up assist and/or mold travel 8. Redesign grid, plug, or ring assists 9. Use recessed pocket in web area
7. Nipples on mold side of formed part	A. Sheet too hot	1. Reduce heating cycle 2. Reduce heater temperature 3. Reduce temperature of sheet surface that contacts mold
	B. Vacuum holes too large	1. Plug holes and redrill with smaller bit 2. Use slot vacuum
8. Too much sag	A. Sheet is too hot	1. Reduce heating cycle 2. Reduce heater temperature
	B. Melt index is too high	1. Use lower melt index resin or different resin 2. Have sheet supplier put more orientation in sheet
	C. Sheet area is too large	1. Profile heat the sheet; use screening or other means of shading or giving preferential heat to sheet, thus reducing relative temperature of center of sheet
9. Sag variation between sheet blanks	A. Variation in sheet temperature	1. Check for air drafts through oven using solid screens around heater section to eliminate
	B. Wide sheet gauge variation	1. Replace sheet with proper gauge tolerance
	C. Sheet made from different resins; not a homogeneous mixture	1. Control regrind percentage and quality 2. Avoid resin mix-ups
10. Chill marks or "mark-off" lines	A. Plug assist temperature too low	1. Increase plug assist temperature 2. Use syntactic foam plug assist 3. Cover plug with cotton flannel or felt
	B. Mold temperature too low—stretching stops when sheet meets cold mold (or plug)	1. Increase mold temperature, not exceeding "set temperature" for particular resin 2. Relieve molds in critical areas
	C. Inadequate mold temperature control	1. Increase number of water cooling tubes or channels 2. Check for plugged water flow
	D. Sheet too hot	1. Reduce heat 2. Heat more slowly 3. Lower surface temperature of sheet

IPR2024-00299
Nespresso USA, Inc. Ex. 1029
Page 52 of 57

Troubleshooting Guide for Thermoforming (*Continued*)

Problem	*Probable Cause*	*Suggested Course of Action*
		4. Slightly chill surface of hot sheet contacting mold with forced air before forming
11. Bad surface markings	A. Pock marks due to air entrapment over smooth mold surface	1. Grit blast mold surface
	B. Poor vacuum	1. Add vacuum holes 2. If pock marks are in isolated area, add vacuum holes to this area or check for plugged vacuum holes or vacuum leak 3. Check entire vacuum system
	C. Mark-off due to accumulation of plasticizer on mold when using sheet with plasticizers	1. Use temperature-controlled mold 2. Have mold as far away from sheet as possible during heating cycle 3. If too long, shorten heating cycle 4. Wipe mold
	D. Mold is too hot	1. Reduce mold temperature
	E. Mold is too cold	1. Increase mold temperature
	F. Improper mold composition	1. Avoid phenolic or other "heat sink" glossy molds with clear transparent sheet 2. Use aluminum molds where possible
	G. Mold surface is too rough	1. Smooth surface 2. Change mold material 3. Sand blast mold surface with #30 shot grit
	H. Dirt on sheet	1. Clean sheet 2. Use ionized air blow
	I. Dirt on mold	1. Clean mold
	J. Dust in atmosphere	1. Clean thermoforming area; isolate area if necessary and supply filtered air 2. Use ionized air
	K. Contaminated sheet materials	1. If regrind is used, be sure to *keep* clean, and different materials stored separately 2. Check supplier of sheet 3. Use coex sheet with virgin
	L. Scratched sheet	1. Separate sheets with paper in storage 2. Polish sheet 3. Replace sheet
12. Shiny streaks on part	A. Sheet overheated in this area	1. Lower heater temperature in scorched area 2. Shield heater with screen wire to reduce overheating 3. Slow heating cycle 4. Increase heater to sheet distance
	B. Bad sheet	1. Check with sheet supplier

IPR2024-00299
Nespresso USA, Inc. Ex. 1029
Page 53 of 57

Troubleshooting Guide for Thermoforming (*Continued*)

Problem	*Probable Cause*	*Suggested Course of Action*
13. Excessive shrinkage or distortion of part after removing from mold	A. Removed part from mold too soon	1. Increase cooling cycle 2. Use cooling fixtures 3. Use fan or vapor spray mist to cool part faster on mold
	B. Too much sheet orientation or nonuniform orientation	1. Replace sheet
14. Part warpage	A. Uneven part cooling	1. Add more water channels or tubing to mold 2. Check for plugged water flow 3. Cool part at same rate on both sides
	B. Poor wall distribution	1. Improve prestretching or plugging techniques 2. Use plug assist 3. Check for nonuniformity of sheet heating 4. Check sheet gauge
	C. Poor mold design	1. Add moat to mold at trim line 2. Add vacuum holes 3. Check for plugged vacuum holes
	D. Poor part design	1. Break up large flat surfaces with ribs where practical or make concave or convex
	E. Mold temperature too low	1. Raise mold temperature to just below "set-temperature" of sheet material
	F. Too much or nonuniform orientation in sheet	1. Check supplier
15. Poor wall thickness distribution and excessive thinning or holes in some areas when sheet stretched	A. Improper sheet sag	1. Use different forming technique such as mounting mold on top platen 2. Use vacuum snap-back technique 3. Use billow vacuum snap back 4. Use billow-up plug assist or vacuum snap-back into female mold 5. Use different melt index resin 6. Try more orientation in sheet
	B. Variations in sheet gauge	1. Consult supplier regarding his commercial tolerances, and improve quality of sheet
	C. Bad sheet	1. Check supplier for calendering of extruded sheet causing thin spots 2. Lack of complete, homogenous sheet
	D. Hot or cold spots in sheet	1. Improve heating technique to achieve uniform heat distribution; screen or shade as necessary 2. Check to see if all heating elements are functioning

IPR2024-00299
Nespresso USA, Inc. Ex. 1029
Page 54 of 57

Troubleshooting Guide for Thermoforming (*Continued*)

Problem	*Probable Cause*	*Suggested Course of Action*
	E. Stray drafts and air currents around machine	1. Enclose heating and forming areas
	F. Too much sag	1. Use screening or other temperature control of center areas of heater banks 2. Use lower melt index resin 3. Use more orientation in sheet
	G. Mold is too cold	1. Provide uniform heating of mold to bring to proper temperature 2. Check temperature control system for scale or other stoppage
	H. Sheet slipping out of frame	1. Adjust clamping frame to provide uniform pressure 2. Check for variation in sheet gauge 3. Heat frames to proper temperature before inserting sheet 4. Check for nonuniformity of heat giving cold areas around clamp frame
16. Nonuniform prestretch bubble	A. Uneven sheet gauge	1. Consult sheet supplier 2. Heat sheet slowly in a "soak" type heat
	B. Uneven heating of sheet	1. Check heater section for heaters out 2. Check heater section for missing screens 3. Screen heater section as necessary
	C. Stray air drafts	1. Enclose or otherwise shield or screen machine 2. Check clamping frame air cylinders for leaks
	D. Nonuniform air blow	1. Baffle air inlet in prestretch box
17. Shrink marks on part, especially in corner areas (inside radius of molds)	A. Inadequate vacuum	1. Check for vacuum leaks 2. Add vacuum surge and/or pump capacity 3. Check for plugged vacuum holes 4. Add vacuum holes
	B. Mold surface is too smooth	1. Grit blast mold surface with #30 grit
	C. Part shrinking away	1. May be impossible to eliminate on thick sheet with vacuum only; use 20–30 psi air pressure on part opposite mold surface if mold will withstand this pressure 2. Add moat to mold just outside trim line

Troubleshooting Guide for Thermoforming (*Continued*)

Problem	*Probable Cause*	*Suggested Course of Action*
18. Too thin corners in deep drawers	A. Improper forming technique	1. Check other techniques such as billow-up plug assist, etc.
	B. Sheet too thin	1. Use heavier gauge
	C. Variation in sheet temperature	1. Profile sheet heating; adjust heating as needed by adding screens to portion of sheet going into corners or with panel heat lower temperature 2. Crosshatch sheet with markings prior to forming so movement of material can be accurately checked
	D. Variation in mold temperature	1. Adjust temperature control system for uniformity
	E. Improper material selection or poor sheet	1. Consult sheet supplier or raw material supplier to be sure proper material is correctly extruded
19. Part sticking to mold	A. Mold or sheet temperature too high	1. Increase cooling cycle 2. Slightly lower mold temperature, not much less than recommended by resin manufacturer 3. Lower surface temperature on sheet side that contacts mold
	B. Not enough draft in mold	1. Increase taper 2. Use female mold 3. Remove part from mold as early as possible; if above "set temperature", use cooling jigs
	C. Mold undercuts	1. Use stripping frame 2. Increase air-eject air pressure 3. Remove part from mold as early as possible; if above "set temperature", use cooling jigs 4. Change mold design for undercut to break away
	D. Wooden mold	1. Grease with Vaseline 2. Use Teflon spray or zinc stearate 3. Lower surface temperature on sheet side that contacts mold
	E. Rough mold surface	1. Polish corners or all of mold 2. Use mold release 3. Use Teflon spray or zinc stearate
	F. Different melt index resin used in color concentrate	1. Have supplier use same grade resin in color concentrate
20. Sheet sticking to plug assist	A. Improper metal plug assist temperature	1. Reduce plug temperature 2. Use mold release 3. Teflon-coat plug 4. Cover plug with felt cloth or cotton flannel 5. Use syntactic foam plug

IPR2024-00299
Nespresso USA, Inc. Ex. 1029
Page 56 of 57

Troubleshooting Guide for Thermoforming (*Continued*)

Problem	*Probable Cause*	*Suggested Course of Action*
	B. Wooden plug assist	1. Cover plug with felt cloth or cotton flannel 2. Grease with Vaseline 3. Use mold release compounds 4. Use Teflon spray or zinc stearate 5. Laminate wood plug surface with syntactic foam
21. Tearing of sheet when forming	A. Mold design	1. Increase radius of corner
	B. Sheet is too hot	1. Decrease heating time or temperature 2. Check for uniform heat 3. Preheat sheet
	C. Sheet is too cold (usually thinner gauges)	1. Increase heating time or temperature 2. Check for uniform heat 3. Preheat sheet
	D. Closing speed between mold and sheet	1. Reduce rate of closure
	E. Bad sheet	1. Check with supplier
22. Cracking in corners during service	A. Stress concentration	1. Increase fillets 2. In transparencies check with polarized light 3. Increase temperature of sheet 4. Be sure part is completely formed before some sections are too cool for proper forming, thus setting up undue stresses in these ares 5. Change to a stress-crack-resistance resin
	B. "Under-designed"	1. Reevaluate design
	C. "Cold"-formed	1. Vacuum *too* slow-speed up 2. Be sure "core" of sheet is at forming temperature and then rapidly drawn to mold with excellent vacuum and/or compressed air
	D. Wrong resin	1. Change to proper material
	E. Bad sheet	1. Check with supplier