April 8, 1969 P. DAVIS ET AL 3,437,253

DISPOSABLE PLASTIC CUP WITH STIFF GRIPPING SECTION

Filed Jan. 12, 1968

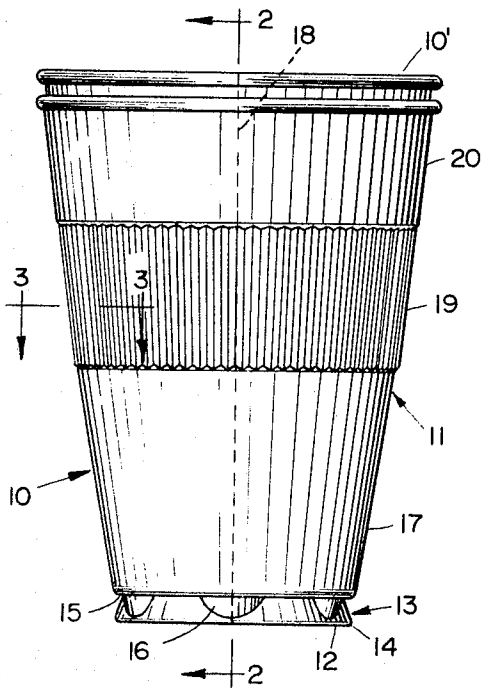

FIG. 1

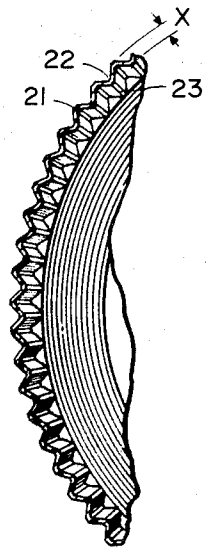

FIG. 3

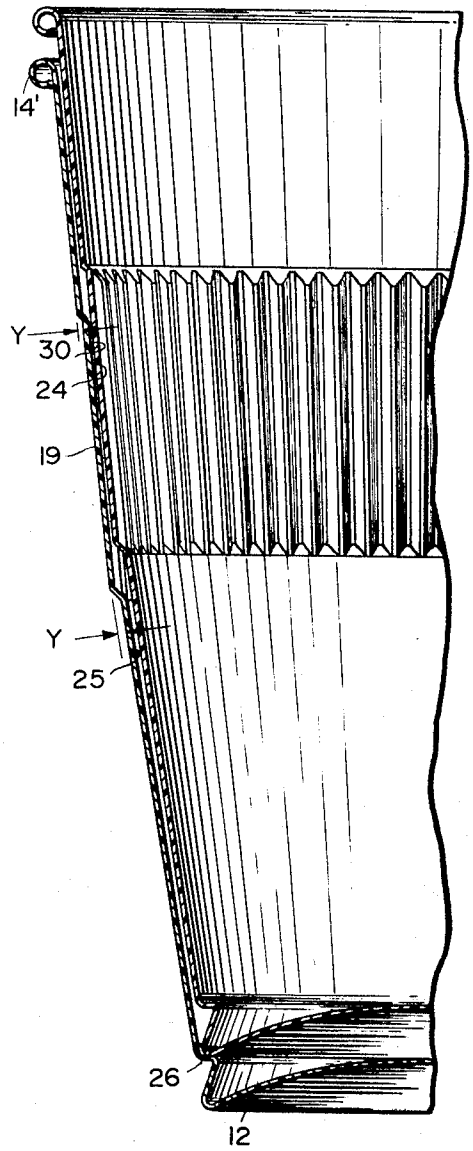

FIG. 2

INVENTORS
PAUL DAVIS
JOSEPH N. McDONALD

BY
Wolf, Greenfield & Hieken

ATTORNEYS

United States Patent Office

3,437,253

Patented Apr. 8, 1969

1

3,437,253
DISPOSABLE PLASTIC CUP WITH STIFF GRIPPING SECTION

Paul Davis, Swampscott, and Joseph N. McDonald, Lexington, Mass., assignors to Sweetheart Plastics, Inc., Wilmington, Mass., a corporation of Massachusetts

Filed Jan. 12, 1968, Ser. No. 697,350
Int. Cl. B65d 3/00
U.S. Cl. 229—1.5 5 Claims

ABSTRACT OF THE DISCLOSURE

A disposable thin wall plastic cup having a stiff gripping section is provided. The gripping section lies intermediate top and bottom side wall sections and is provided with a large number of axially extending flutes having substantial depth as compared with the thickness of the side wall to maximize stiffening properties of the cup and enable ease and comfort in holding the cup even if filled with hot liquids.

Background of the invention

Thin wall disposable plastic containers made by conventional thermoforming techniques have long been known in the art. Such containers, because of their extremely thin walls, particularly when made in six and eight ounce sizes, are subject to bending and distortion when they are filled with liquids. The art has turned to a number of devices for strengthening such containers which devices often include complicated mold designs and/or configurations which are difficult to stack and nest in storage, shipment and use. An additional problem known in the art when thin walled containers are used in conjunction with hot liquids such as coffee, is the problem of heat transfer through the thin side walls. It has been suggested to use a plurality of circumferentially extending grooves in the side wall to minimize heat transfer to the hand of a user. However, circumferentially extending grooves are limited in number in most cup constructions since they taper inwardly toward the axis of the cup in order to prevent formation of excessive undercut areas of the side wall. Excessively undercut areas tend to make removal from molding cavities difficult.

Summary of the invention

According to the invention an integral one-piece thin walled plastic cup is vacuum or pressure formed of a thin sheet of plastic material and has a side wall with a bottom wall joined to the side wall at a lower edge. The side wall has a lower section extending upwardly and outwardly from the bottom wall at a preselected angle to the cup axis. A middle gripping section extends upwardly and outwardly from the top of the lower section preferably at a preselected angle with the cup axis smaller than the angle made by the lower section with the cup axis. An upper section extends upwardly and outwardly from the top of the middle section at a preselected angle with the cup axis. A rolled rim is provided at the top of the upper section and a plurality of axially extending ribs are formed in the middle gripping section preferably

2

approximately 60 to 80 in number in a continuous series of external peaks and valleys. A circle passing through the peaks defines an outer diameter between 0.025 and 0.075 inch greater than the inner diameter taken on a circle through the bottoms of the valleys.

Since the ribs extend substantially axially, they can have a depth substantial enough to cut down heat transfer when gripped by the hand of a user and yet avoid formation of undercut areas in the cup side wall which would hinder removal from a mold. Moreover, since the grooves extend axially, the angle of the middle gripping section to the axis can be adjusted as desired and many grooves for example 60 to 80 can be provided in 7, 9 or 10 ounce cups without excessive tapering of the middle gripping section or the bottom section. Thus, mold design can be simplified and the over-all diameter of the cup need not be diminished greatly as the side wall extends from top to bottom leaving a bottom wall having a substantial diameter suitable to firmly support the cup in an upright position. Preferably the peak to peak distance on the outside of the cup is in the range of from 0.090 to 0.125 inch.

It is a feature of the cup of this invention that the upper diameter of the middle gripping section taken at the valleys is greater than the outer diameter of the bottom section so that cups formed in accordance with this invention can be compactly nested with ribs of one cup interlocking with ribs of another cup to form compact stacks. Yet, there is a radial freedom of movement so that one cup can be reciprocally rotated, radially and circumferentially in a plane perpendicular to the cup axis so that the cups easily disengage from a stack. In addition when the cups are stacked, the ribs prevent turning of one cup with respect to another in a stack yet, the stack is free to resiliently curve about the axis of the stack. The last-mentioned feature is particularly useful when a stack of cups are inserted into a rim rolling machine and it is desirable to roll a plurality of rims while preventing one cup from turning about its axis with respect to any other cup in the stack in order to prevent spin welding or scuffing of adjacent cups.

Brief description of the drawings

The above and other features and advantages of the present invention will be better understood from the following description when read in connection with the accompanying drawings in which:

FIG. 1 is a front plan view of two nested plastic cups made in accordance with the present invention;

FIG. 2 is a cross sectional view through line **2—2** thereof; and,

FIG. 3 is a cross sectional view through line **3—3** thereof.

Brief description of preferred embodiments

With reference now to the drawings, a thin wall disposable plastic cup is illustrated at **10** in FIG. 1 having an identical thin wall plastic cup **10'** nested therein. Each cup **10** is thermoformed, as by pressure forming, in accordance with known practice from a single sheet of plastic material which is preferably impact polystyrene although modified polystyrenes, polyethylene, polypropylene and the like may be used. The side wall thickness of the cups

10 in accordance with known practice is in the range of from about 0.007 to 0.020 inch.

The cup **10** is provided with an upwardly tapered side wall **11** joined to a bottom wall **12** at a bottom edge of the cup with an intermediate stacking ring **13**. A conventional rolled rim **14'** is formed by an overturned upper edge of the cup in accordance with known practice having an axial extent less than the axial extent of the stacking ring **13**.

The bottom wall **12** is preferably dished as best shown in FIG. 2 with the curved or domed configuration providing additional support for liquids contained within the cup. In some cases, flat bottom walls can be used. The stacking ring **13** defines a lower bottom edge **14**, an upward and axially inwardly extending stacking ring section **13** and an upper horizontal shoulder **15**. Preferably the stacking ring is discontinuous and provided with a plurality of stiffening projections **16** in accordance with known practice. The projections act to stiffen the side wall and also provide relief for stripping from the molds used.

A lower conical section **17** of the side wall extends upwardly and outwardly from the bottom wall at a preselected angle with the cup axis indicated by the dotted line **18**. A middle gripping section **19** is integral with the lower section **17** and extends upwardly and outwardly from the top of the lower section at a preselected angle with the cup axis which angle is preferably smaller than the angle made by the lower section **17** in order to increase arcuate flexibility of a stack. The upper section **20** is integral with the middle section **19** and extends upwardly and outwardly from the top of the middle section at another preselected angle with the cup axis to the rolled rim **14'**.

Preferably the angle of the middle section of the side wall is equal to the angle of the upper section **20** and less than the angle of the lower section **17**. Thus, the angles of the middle gripping and upper sections with the axis may be 6½°, and the angle of the lower section 8½° with the axis in a 9-ounce cup having a height of 3.8 inches and a rim inside diameter of 2.8 inches. Since the angles of the top and middle section are the same, the height of the cup need not be excessive since the taper of the cup is relatively small from top to bottom of the side wall. Thus, by use of the gripping section of this invention, the over-all height of a cup can be minimized while maintaining a wide diameter at the cup bottom and thereby maximizing the cup volume and stability.

The middle gripping section is formed by a plurality of axially extending ribs as shown having peaks **21** and valleys **22** with valley bottoms **23**. Preferably from 60 to **80** ribs or corrugations extend about the circumference of the cup although the number may vary depending upon the diameter and wall thickness employed. When a 9-ounce cup **10** having a height of 3.8 inches, an inner top rim diameter of 2.8 inches is used, 72 uniform ribs as shown in FIG. 3 are preferably employed. The distance between each peak **21** taken at a plane perpendicular to the axis of the cup preferably is in the range of from about 0.090 to 0.125 inch. The radial distance between the peak and the valley bottom indicated at X in FIG. 3 is preferably 0.030 inch or at least in the range of from 0.025 to 0.075 inch in order to maximize comfort to the hand of a user when the cup is filled with hot coffee or other hot liquids. Thus, a conical section taken at the peaks **21** is radially displaced from 0.0125 to 0.0375 inch from a conical section taken at the bottom of the valleys. In the preferred embodiment the projection of a cone **30** generated by the external peaks **21** is spaced from the outside of the upper section preferably by a small distance Y of 0.005 inch.

Preferably the over-all extent axially of the rib section is from ½ to 1½ inches and preferably 1 inch since shorter sections do not provide sufficient stiffening properties to the cup while longer sections add to the die costs without corresponding additional advantage in the cup constructions of this invention.

As best shown in FIG. 2, the inside diameter of the cup at points **24, 25** and **26** are progressively smaller from top to bottom and the outside diameter of the cup at edge **14** easily permits compact stacking of the edge **14** against the top of shoulder **15** with ribs of one cup interengaging and locking with the ribs of an underlying cup. When the ribs of the cup are formed before rolling of the rim **14'**, a plurality of such cups can be stacked as shown in FIG. 2 and processed in a conventional rim rolling machine. Since the ribs prevent turning of one cup with respect to another cup about the cup axis, facilitation of rim rolling can be achieved and spin welding and scuffing of adjacent cups prevented.

While specific embodiments of the present invention have been shown and described, it should be understood that many modifications thereof are possible. For example, while it is preferred that the angle of the middle gripping section **19** be the same as that of the upper section, it can vary and can be slightly less than that of the upper section in some embodiments. In all cases, since the ribs run axially of the container, no undercut areas are formed and ease of stripping from a mold is maximized. While the use of equal size flat side walls for each rib or flute is preferred, the ribs can be circular or curved in cross section of a plane perpendicular to the axis if desired although maximum heat insulation is provided in the preferred embodiment.

What is claimed is:

1. A one-piece plastic cup made of thin sheet plastic material comprising:

a side wall and a bottom wall joined together at a lower edge,

said side wall having a thickness in the range of from about 0.007 to 0.020 inch,

said side wall having a lower section extending upwardly and outwardly from the bottom wall at a preselected angle with the cup axis,

a middle gripping section extending upwardly and outwardly from the top of the lower section at a preselected angle with the cup axis smaller than the angle made by the lower section,

an upper section extending upwardly and outwardly from the top of the middle section at a preselected angle with the cup axis,

a rolled rim provided at the top of the upper section,

a plurality of substantially axially extending ribs provided in the middle gripping section formed from a continuous series of external peaks and valleys with a cone generated by the the peaks having an outer diameter between 0.025 to 0.075 inch greater than the inner diameter of a cone generated by the valleys.

2. A one-piece plastic cup in accordance with claim **1** wherein said ribs define peaks wherein the distance between each of said peaks is between about 0.090 to 0.125 inch.

3. A one-piece plastic cup in accordance with claim **9** further characterized by the axial extent of the ribs being approximately 1 inch in axial height.

4. A one-piece plastic cup in accordance with claim **2** further characterized by the preselected angles of the middle and top sections being equal.

5. A one-piece plastic cup made of thin sheet plastic material comprising

a side wall and a bottom wall joined together at a lower edge,

said side wall having a thickness in the range of from about 0.007 to 0.020 inch, a lower section extending upwardly and outwardly from the bottom wall at a preselected angle with the cup axis,

a middle gripping section extending upwardly and outwardly from the top of the lower section at a preselected angle with the cup axis,

an upper section extending upwardly and outwardly from the top of the middle section at a preselected angle with the cup axis,

a rolled rim provided at the top of the upper section,

a plurality of substantially axially extending uniform ribs provided in the middle gripping section formed from a continuous series of external peaks and valleys with a cone generated by the peaks having an outer diameter between 0.025 to 0.075 inch greater than the inner diameter of the valleys,

said peaks define the distance between each other of between 0.090 to 0.125 inch.

References Cited

UNITED STATES PATENTS

2,982,440	5/1961	Harrison	229—1.5
3,079,027	2/1963	Edwards	220—97
3,342,370	9/1967	Johnson	229—1.5

DAVID M. BOCKENEK, *Primary Examiner.*

U.S. Cl. X.R.

220—9, 97