US009271598B2

(12) **United States Patent**
Yoakim et al.

(10) **Patent No.: US 9,271,598 B2**
(45) **Date of Patent: Mar. 1, 2016**

(54) **METHOD FOR PREPARING A FOOD LIQUID CONTAINED IN A CAPSULE BY CENTRIFUGATION AND DEVICE ADAPTED FOR SUCH METHOD**

(75) Inventors: **Alfred Yoakim**, St. Legier la Chiesaz (CH); **Jean-Paul Denisart**, La Conversion (CH); **Antoine Ryser**, Lausanne (CH)

(73) Assignee: **Nestec S.A.**, Vevey (CH)

(*) Notice: Subject to any disclaimer, the term of this patent is extended or adjusted under 35 U.S.C. 154(b) by 556 days.

(21) Appl. No.: **12/602,553**

(22) PCT Filed: **May 26, 2008**

(86) PCT No.: **PCT/EP2008/056412**

§ 371 (c)(1),
(2), (4) Date: **Dec. 1, 2009**

(87) PCT Pub. No.: **WO2008/148656**

PCT Pub. Date: **Dec. 11, 2008**

(65) **Prior Publication Data**

US 2010/0203208 A1 Aug. 12, 2010

(30) **Foreign Application Priority Data**

Jun. 5, 2007 (EP) 07109579
Feb. 29, 2008 (EP) 08102147

(51) **Int. Cl.**

B65D 85/804	(2006.01)
A47J 31/22	(2006.01)
A47J 31/36	(2006.01)
A47J 31/20	(2006.01)

(52) **U.S. Cl.**

CPC ***A47J 31/22*** (2013.01); ***A47J 31/3628*** (2013.01); ***B65D 85/8043*** (2013.01); *A47J 31/20* (2013.01); *A47J 31/3614* (2013.01)

(58) **Field of Classification Search**

USPC 426/433, 435, 431; 99/287
See application file for complete search history.

(56) **References Cited**

U.S. PATENT DOCUMENTS

239,659	A	4/1881	Houston	
1,963,476	A	6/1934	Smith	210/67

(Continued)

FOREIGN PATENT DOCUMENTS

AT	197553 B	5/1958
BE	894 031	2/1983

(Continued)

OTHER PUBLICATIONS

Non Final Office Action, U.S. Appl. No. 12/602,577, dated Mar. 20, 2012.

(Continued)

Primary Examiner — Nikki H Dees
Assistant Examiner — Stephanie Cox
(74) *Attorney, Agent, or Firm* — Winston & Strawn LLP

(57) **ABSTRACT**

A method for preparing a food liquid from a food substance contained in a single-use capsule by passing water through the substance. The method includes centrifugally rotating the capsule while introducing water therein to pass the water through the substance to form the food liquid, opening at least one liquid delivery outlet in the capsule which is peripherally offset relative to the center of the capsule, and delivering the food liquid from the at least one liquid delivery outlet to dispense the beverage.

14 Claims, 11 Drawing Sheets

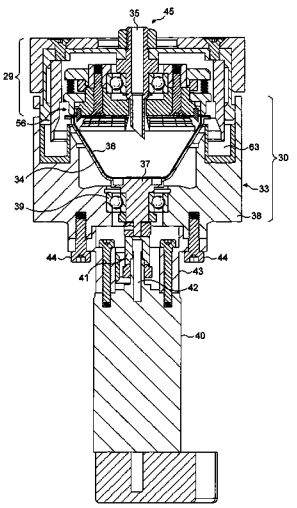

(56) **References Cited**

U.S. PATENT DOCUMENTS

2,778,739	A	1/1957	Rodth	99/171
2,899,886	A	8/1959	Rodth	
2,952,202	A	9/1960	Renner et al.	
3,025,781	A	3/1962	Bossi	
3,233,535	A	2/1966	Fowlie	
3,269,298	A *	8/1966	Grundmann	99/289 R
3,566,770	A *	3/1971	Crossley	99/289 R
3,654,852	A	4/1972	Rosan, Sr.	
3,812,773	A	5/1974	Hultsch	99/290
3,822,013	A	7/1974	Van Der Veken	206/233
3,967,546	A	7/1976	Cailliot	99/286
3,985,069	A	10/1976	Cavalluzzi	99/295
4,136,202	A	1/1979	Favre et al.	
4,426,919	A	1/1984	Rhoten	99/289
4,464,982	A	8/1984	Leuschner et al.	99/287
4,473,002	A	9/1984	Leuschner et al.	99/302
4,545,296	A	10/1985	Ben-Shmuel	99/289 P
4,584,101	A	4/1986	Kataoka	201/474
4,806,375	A	2/1989	Favre	426/433
4,846,052	A	7/1989	Favre et al.	
4,859,337	A	8/1989	Woltermann	210/474
4,962,693	A	10/1990	Miwa et al.	99/283
5,047,252	A	9/1991	Liu et al.	426/79
5,265,517	A	11/1993	Gilbert	99/280
5,300,308	A	4/1994	Louridas	426/112
5,325,765	A *	7/1994	Sylvan et al.	99/295
5,343,799	A	9/1994	Fond	
5,566,605	A	10/1996	Lebrun et al.	99/302
5,637,335	A	6/1997	Fond et al.	426/84
5,649,472	A	7/1997	Fond et al.	99/295
5,656,311	A	8/1997	Fond	
5,755,149	A	5/1998	Blanc et al.	99/289
5,773,067	A	6/1998	Freychet et al.	426/506
5,826,492	A	10/1998	Fond et al.	
5,948,455	A	9/1999	Schaeffer et al.	426/77
6,007,853	A	12/1999	Lesser	426/77
6,607,762	B2	8/2003	Lazaris et al.	426/79
6,777,007	B2	8/2004	Cai	426/78
6,786,134	B2	9/2004	Green	99/289 P
6,849,285	B2	2/2005	Masek et al.	
6,854,378	B2	2/2005	Jarisch et al.	
7,017,775	B2	3/2006	Zettle et al.	220/781
7,153,530	B2	12/2006	Masek et al.	
7,216,582	B2	5/2007	Yoakim et al.	
7,325,478	B2	2/2008	Cautenet et al.	
7,325,479	B2	2/2008	Laigneau et al.	
7,469,627	B2	12/2008	Li	99/286
7,569,242	B2	8/2009	Barber et al.	
7,569,243	B2	8/2009	Yoakim et al.	
7,770,512	B2	8/2010	Albrecht	99/295
7,981,451	B2	7/2011	Ozanne	
8,151,694	B2	4/2012	Jacobs et al.	
8,307,754	B2	11/2012	Ternite et al.	
8,327,754	B2	12/2012	Kirschner et al.	
8,409,646	B2	4/2013	Yoakim et al.	
8,431,175	B2	4/2013	Yoakim et al.	
8,512,784	B2	8/2013	Denisart et al.	
8,813,634	B2	8/2014	Yoakim et al.	
2003/0116029	A1	6/2003	Kollep	
2003/0145736	A1	8/2003	Green	99/280
2003/0159593	A1	8/2003	Leutwyler	
2003/0189872	A1	10/2003	Artman et al.	
2004/0255790	A1	12/2004	Green	
2005/0150390	A1	7/2005	Schifferle	99/295
2005/0188854	A1	9/2005	Green et al.	
2006/0003075	A1	1/2006	Meador	
2006/0110507	A1 *	5/2006	Yoakim et al.	426/433
2006/0196364	A1	9/2006	Kirschner	
2006/0236871	A1	10/2006	Ternite et al.	99/295
2007/0079708	A1	4/2007	Li	99/279
2007/0248734	A1	10/2007	Denisart et al.	
2007/0289453	A1	12/2007	Halliday	
2008/0014860	A1	1/2008	Heitman et al.	
2008/0038414	A1	2/2008	Veciana I Membrado et al.	
2008/0122286	A1	5/2008	Brock et al.	
2008/0187638	A1	8/2008	Hansen	
2009/0032454	A1	2/2009	Rapparini	210/337
2009/0050540	A1	2/2009	Imai et al.	
2009/0136639	A1	5/2009	Majer	426/431
2009/0155422	A1	6/2009	Ozanne	426/89
2009/0218877	A1	9/2009	Derman	
2010/0024658	A1	2/2010	Jacobs et al.	
2010/0064899	A1	3/2010	Aardenburg	99/295
2010/0108541	A1	5/2010	Roberto	
2010/0173056	A1	7/2010	Yoakim et al.	426/433
2010/0176004	A1	7/2010	Schneider et al.	205/687
2010/0178392	A1	7/2010	Yoakim et al.	426/80
2010/0178404	A1	7/2010	Yoakim et al.	426/431
2010/0186599	A1	7/2010	Yoakim et al.	99/295
2010/0203198	A1	8/2010	Yoakim et al.	426/80
2010/0239734	A1	9/2010	Yoakim et al.	426/433
2011/0041702	A1	2/2011	Yoakim et al.	99/302 R
2011/0052761	A1	3/2011	Yoakim et al.	426/77
2011/0189362	A1	8/2011	Denisart et al.	426/433
2011/0217421	A1	9/2011	Perentes et al.	426/80
2011/0244099	A1	10/2011	Perentes et al.	426/431
2011/0262601	A1	10/2011	Manser et al.	
2012/0058226	A1	3/2012	Winkler et al.	

FOREIGN PATENT DOCUMENTS

CA	2625215	A1	4/2007
CN	101001555		10/1987
CN	1656983		8/2005
DE	2151920	A1	4/1973
DE	32 41 606		3/1984
DE	35 29 053		2/1987
DE	35 29 204		2/1987
DE	37 19 962		6/1988
DE	42 40 429		6/1994
DE	44 39 252		5/1996
DE	10355671	A1	6/2004
DE	10 2005 007 852		8/2006
EP	0521510		2/1975
EP	0242556	A1	10/1987
EP	0 250 810	A1	1/1988
EP	0 367 600		5/1990
EP	0 512 470	A1	11/1992
EP	0521187	A1	1/1993
EP	0 607 759		7/1994
EP	0 651 963		5/1995
EP	0 749 713		12/1996
EP	0 806 373	B1	11/1997
EP	1208782	B1	5/2002
EP	1 299 022	B1	4/2003
EP	1 654 966	B1	5/2006
EP	1 774 878		4/2007
EP	1 813 333	A2	8/2007
EP	2 000 062	A1	12/2008
EP	215502	B1	3/2011
FR	2 132 310		11/1972
FR	2 487 661		2/1982
FR	2 513 106		3/1983
FR	2 531 849		2/1984
FR	2 535 597		5/1984
FR	2617389		11/1987
FR	2 624 364		6/1989
FR	2 685 186		6/1993
FR	2 686 007		7/1993
FR	2 726 988		5/1996
GB	1 506 074	A	4/1978
GB	2 416 480		4/1985
GB	2 227 405	A	8/1990
GB	2 253 336		9/1992
GB	2 416 480	A	2/2006
JP	50016225	A	2/1975
JP	59-082817	A	5/1984
JP	62254719	A	11/1987
JP	63034581	U	3/1988
JP	02124111	A2	5/1990
JP	02189114	A2	7/1990
JP	61-04091	B	12/1994
JP	06339431	A2	12/1994
JP	3034606		2/1997

(56) **References Cited**

FOREIGN PATENT DOCUMENTS

JP	2001061663	A	3/2001
JP	2002189115	A	7/2002
JP	2002215414	A	8/2002
JP	2003144973	A2	5/2003
JP	2004517654	A	6/2004
JP	2005516602		6/2005
JP	2005199071	A2	7/2005
JP	2005525146	A	8/2005
JP	2006515764	A	6/2006
JP	2006518226	A	8/2006
JP	2008508041	A	3/2008
JP	2008520298	A	6/2008
TW	200718383		5/2007
WO	WO 94/02059	A1	2/1994
WO	WO 02/17760	A1	3/2002
WO	WO 02/35977	A1	5/2002
WO	WO2004/030500	A1	4/2004
WO	WO2005/066040	A2	7/2005
WO	WO 2006/082064	A1	8/2006
WO	WO 2006/112691		10/2006
WO	WO2007/014584	A1	2/2007
WO	WO 2007/041954		4/2007
WO	WO2007042414	A1	4/2007
WO	WO 2007/085921	A2	8/2007
WO	WO 2007/110768	A2	10/2007
WO	WO 2008/087099	A2	7/2008
WO	WO 2008/148601	A1	12/2008
WO	WO 2008/148604		12/2008
WO	WO 2008/148646		12/2008
WO	WO 2008/148650		12/2008
WO	WO 2008/148834		12/2008
WO	WO 2009/050540	A1	4/2009
WO	WO 2009/106175	A1	9/2009
WO	WO 2009/106598	A1	9/2009
WO	WO 2009/133134	A1	11/2009
WO	WO 2010/026045	A1	3/2010
WO	WO 2010/026053	A1	3/2010
WO	WO 2010/038213	A2	4/2010
WO	WO 2010/041179	A2	4/2010

OTHER PUBLICATIONS

Non Final Office Action, U.S. Appl. No. 12/602,562, dated Feb. 13, 2012.
Non Final Office Action, U.S. Appl. No. 12/602,542, dated Apr. 13, 2012.
Non Final Office Action, U.S. Appl. No. 12/602,730, dated May 17, 2012.
Non Final Office Action, U.S. Appl. No. 12/860,705, dated Mar. 16, 2012.
Non Final Office Action, U.S. Appl. No. 12/602,568, dated Mar. 20, 2012.
Green Mountain Coffee, New K-Cup Samplers Offer More Variety; Jul. 11, 2008, pp. 1-5. Accessed Mar. 6, 2012 from http://www.greenmountincafe.com/2008/07/new-k-cup-samplers-offer-more-variety/.
Chilean Patent Application No. CL-1652-2008, filed Jun. 5, 2008 (English in U.S. equivalent 2010/0173056 and WO2008/148601).
Chilean Patent Application No. CL-1653-2008, filed Jun. 5, 2008 (English in U.S. equivalent 2010/0186599 and WO2008/148604).
Chilean Patent Application No. CL-1655-2008, filed Jun. 5, 2008 (English in U.S. equivalent 2010/0178404 and WO2008/148646).
International Search Report mailed Feb. 9, 2010 for Application No. PCT/EP2009/060697 filed Aug. 19, 2009.
International Search Report mailed Feb. 8, 2010 for Application No. PCT/EP2009/060771 filed Aug. 20, 2009.
U.S. Appl. No. 12/602,542, filed Dec. 1, 2009.
U.S. Appl. No. 12/602,562, filed Dec. 1, 2009.
U.S. Appl. No. 12/602,568, filed Dec. 1, 2009.
U.S. Appl. No. 12/602,577, filed Dec. 1, 2009.
U.S. Appl No. 12/602,730, filed Dec. 2, 2009.
U.S. Appl. No. 12/776,155, filed May 7, 2010.
U.S. Appl. No. 13/061,558, filed Mar. 1, 2011.
U.S. Appl. No. 13/061,567, filed Mar. 1, 2011.
U.S. Appl. No. 12/856,369, filed Aug. 13, 2010.
U.S. Appl. No. 12/860,705, filed Aug. 20, 2010.
Written Opinion of the International Searching Authority and International Search Report, PCT/EP2008/056968, mailed Oct. 7, 2008.
Written Opinion of the International Searching Authority and International Search Report, PCT/EP2008/054401, mailed Sep. 11, 2008.
Written Opinion of the International Searching Authority and International Search Report, PCT/EP2008/056310, mailed Oct. 8, 2008.
Written Opinion of the International Searching Authority and International Search Report, PCT/EP2008/056345, mailed Oct. 1, 2008.
Written Opinion of the International Searching Authority and International Search Report, PCT/EP2008/054810, mailed Oct. 24, 2008.
European Search Report,EP 09174573.7, mailed Apr. 9, 2010.
Written Opinion of the International Searching Authority and International Search Report, PCT/EP2008/056412, mailed Sep. 11, 2009.
Non Final Office Action, U.S. Appl. No. 13/061,558, dated Dec. 6, 2012.
Final Office Action, U.S. Appl. No. 12/602,542, dated Oct. 4, 2012.
Final Office Action, U.S. Appl. No. 12/602,730, dated Sep. 18, 2012.
Non Final Office Action, U.S. Appl. No. 12/602,568, dated Jul. Oct. 19, 2012.
Non Final Office Action, U.S. Appl. No. 12/776,155, dated Jul. 18, 2012.
Final Office Action, U.S. Appl. No. 12/602,568, dated Jul. 16, 2012.
Final Office Action, U.S. Appl. No. 12/602,562, dated Jun. 22, 2012.
Final Office Action, U.S. Appl. No. 12/602,577, dated Jul. 20, 2012.
Final Office Action, U.S. Appl. No. 12/860,705, dated Jul. 18, 2012.
Restriction Requirement U.S. Appl. No. 13/133,613 dated Mar. 28, 2013.
Restriction Requirement U.S. Appl. No. 12/856,369 dated Feb. 15, 2013.
Notice of Allowance U.S. Appl. No. 12/776,155 dated Mar. 1, 2013.
Notice of Allowance U.S. Appl. No. 12/602,568 dated Dec. 1, 2012.
Advisory Action, U.S. Appl. No. 12/602,577 dated Oct. 11, 2012.
Non-Final Office Action, U.S. Appl. No. 13/602,542 dated Jun. 18, 2013.
Final Office Action, U.S. Appl. No. 13/061,558 dated May 21, 2013.
Notice of Allowance, U.S. Appl. No. 13/061,567 dated Jun. 11, 2013.
Non-Final Office Action, U.S. Appl. No. 13/061,567 dated May 10, 2013.
Non Final Office Action, U.S. Appl. No. 13/133,613, dated Jul. 18, 2013.
Non Final Office Action, U.S. Appl. No. 12/856,369, dated Jul. 30, 2013.
Non-Final Office Action, U.S. Appl. No. 12/602,577 dated Nov. 1, 2013.
Non-Final Office Action, U.S. Appl. No. 12/602,730 dated Dec. 17, 2013.
Advisory Action, U.S. Appl. No. 12/602,730 dated Jan. 18, 2013.
U.S. Appl. No. 13/061,558, Notice of Allowance, dated Sep. 26, 2014.
U.S. Appl. No. 12/602,542, Final Office Action, dated Jan. 30, 2014.
U.S. Appl. No. 13/061,558 Non-Final Office Action, dated Feb. 14, 2014.
U.S. Appl. No. 12/602,562, Non-Final Office Action, dated Jul. 17, 2014.
U.S. Appl. No. 12/602,577, Final Office Action, dated May 16, 2014.
U.S. Appl. No. 13/133,613, Final Office Action, dated Mar. 21, 2014.
Advisory Action, U.S. Appl. No. 12/602,577, May 16, 2014.
Notice of Allowance, U.S. Appl. No. 12/602,577, Nov. 14, 2014.
Advisory Action, U.S. Appl. No. 12/602,562, Sep. 25, 2012.
Advisory Action, U.S. Appl. No. 12/602,568, Sep. 27, 2012.
Notice of Allowance, U.S. Appl. No. 12/602,730, Apr. 29, 2014.
Restriction Requirement, U.S. Appl. No. 12/776,155, Apr. 30, 2012.
Final Office Action, U.S. Appl. No. 12/856,369, Mar. 10, 2014.
Advisory Action, U.S. Appl. No. 12/856,369, May 9, 2014.
Restriction Requirement, U.S. Appl. No. 12/860,705, Dec. 30, 2011.
Advisory Action, U.S. Appl. No. 12/860,705, Oct. 17, 2012.
Notice of Allowance, U.S. Appl. No. 12/860,705, Nov. 14, 2013.
Restriction Requirement, U.S. Appl. No. 13/061,558, Nov. 13, 2012.
Non-Final Office Action, U.S. Appl. No. 12/602,542, Jan. 13, 2015.
Non-Final Office Action, U.S. Appl. No. 12/602,562, Feb. 13, 2012.
Final Office Action, U.S. Appl. No. 12/602,562, Feb. 11, 2015.

* cited by examiner

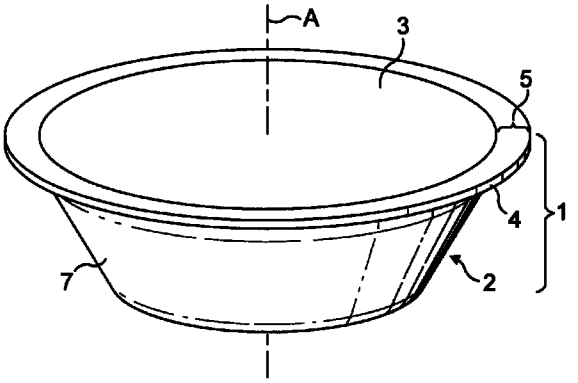

FIG. 1

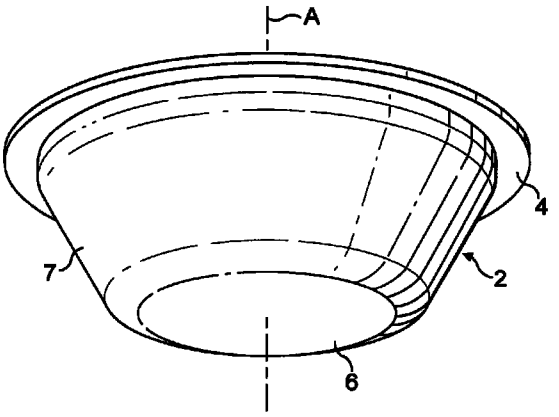

FIG. 2

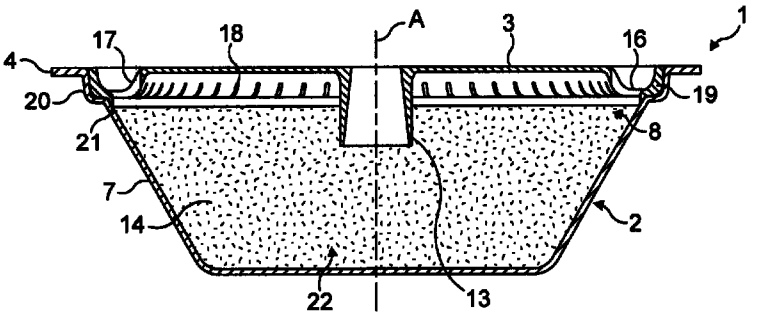

FIG. 3

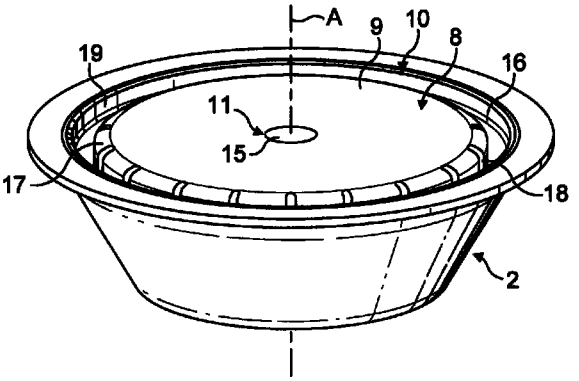

FIG. 4

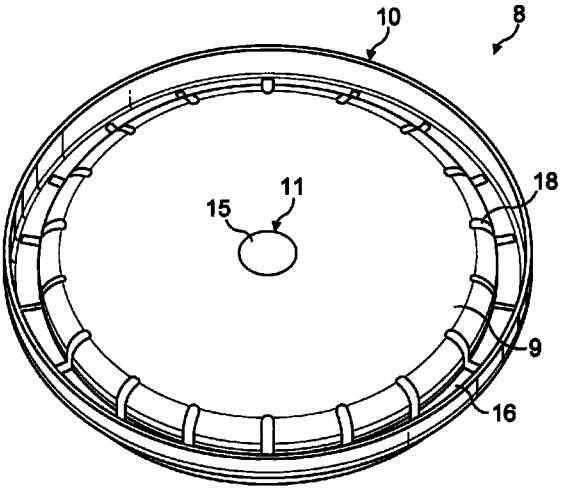

FIG. 5

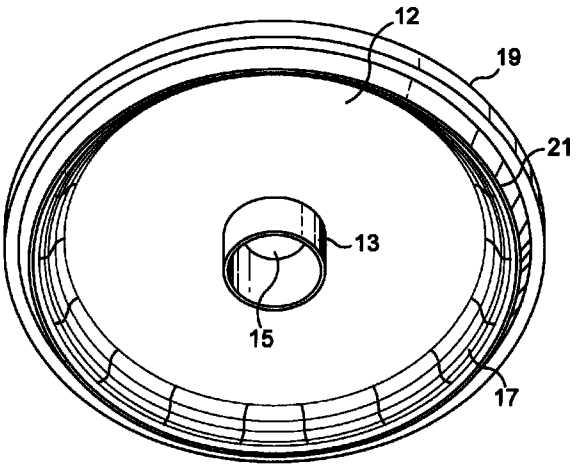

FIG. 6

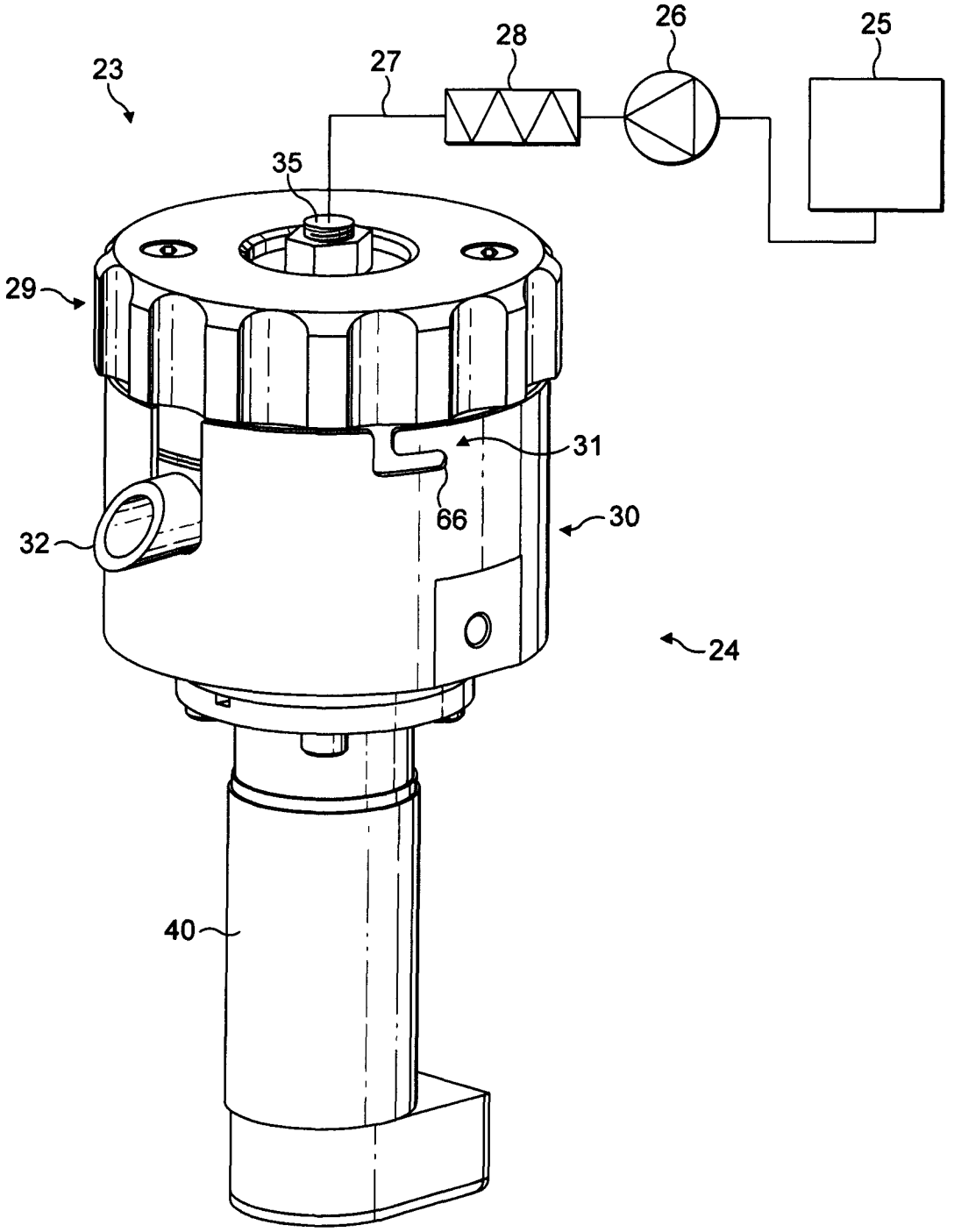

FIG. 7

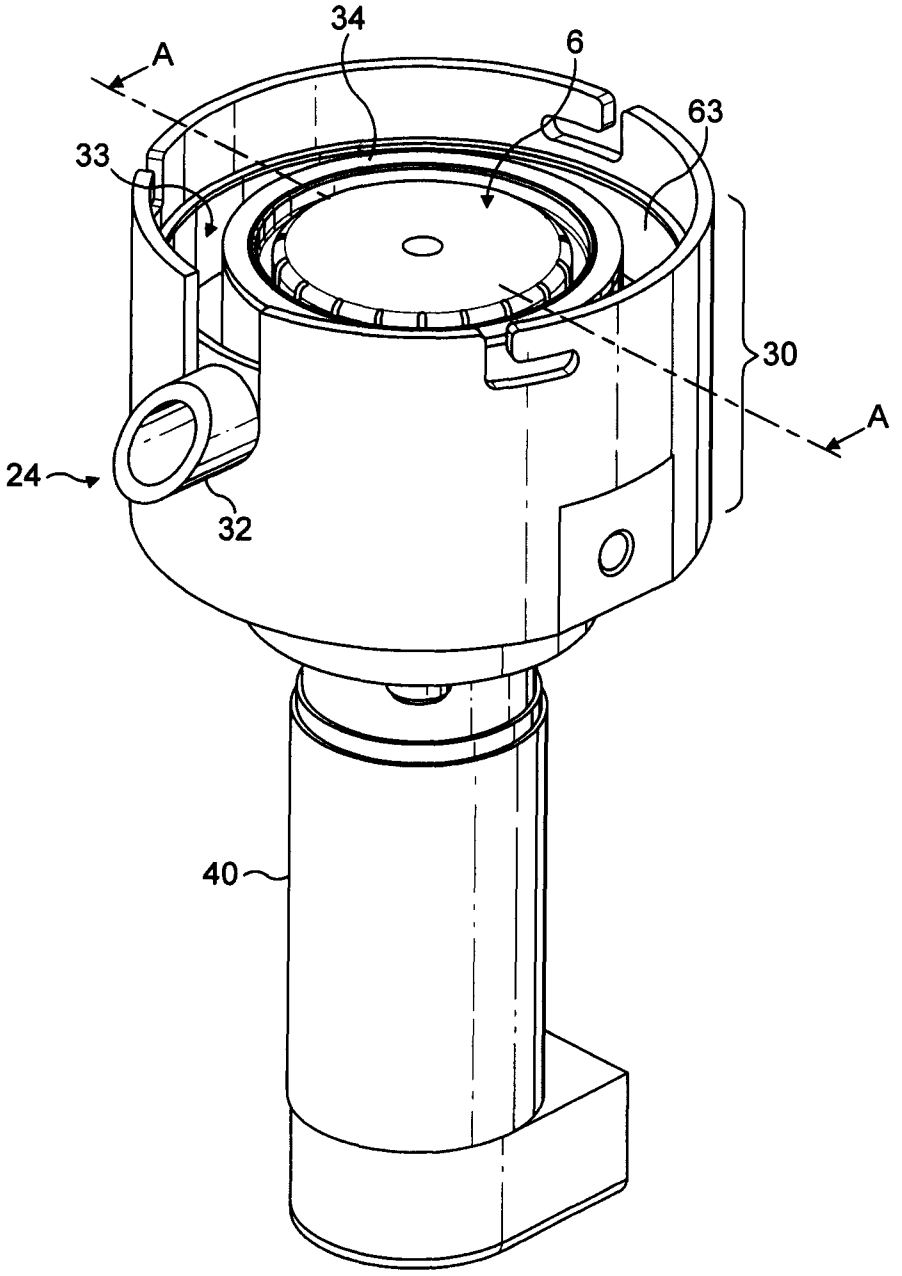

FIG. 8

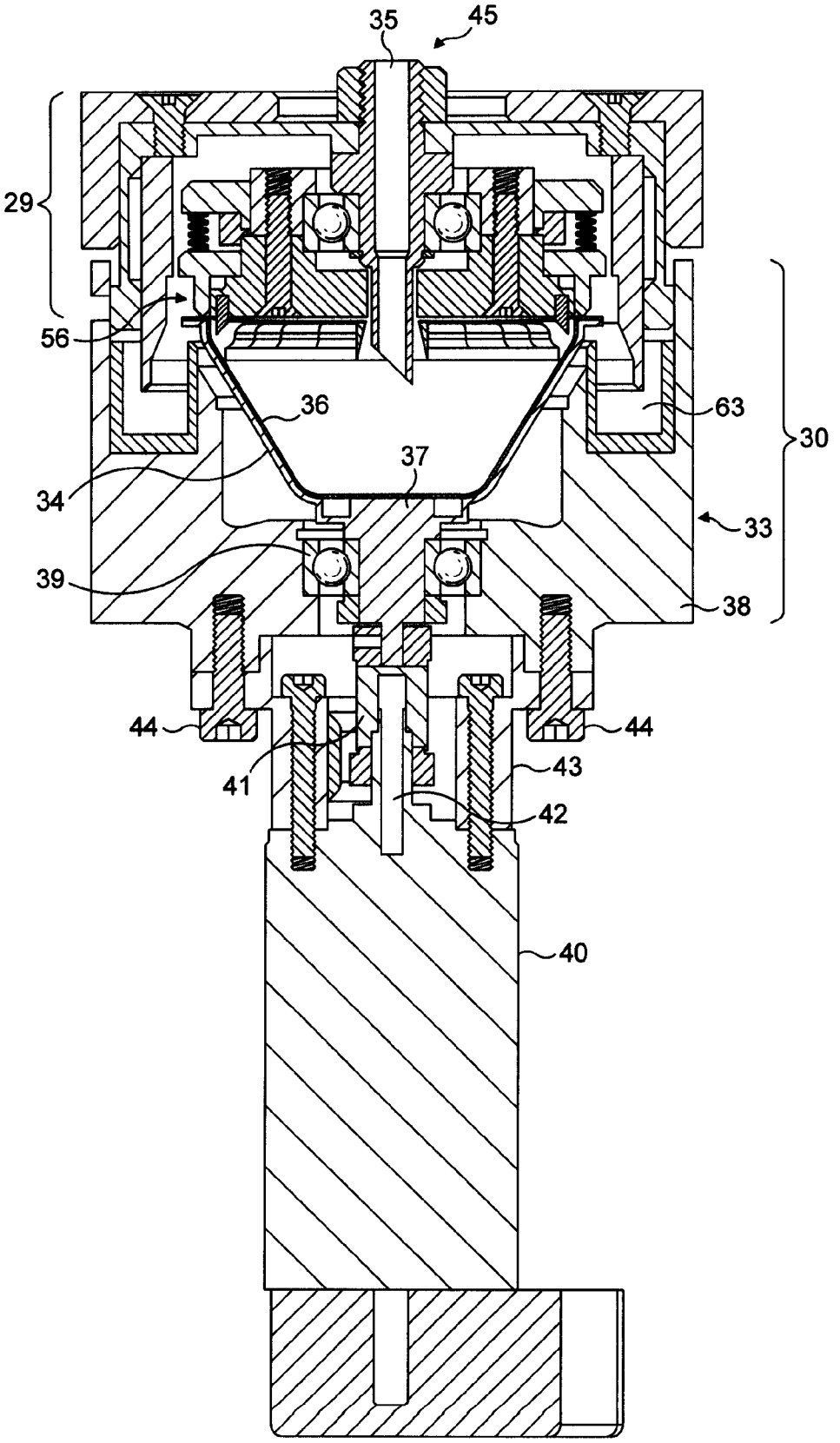

FIG. 9

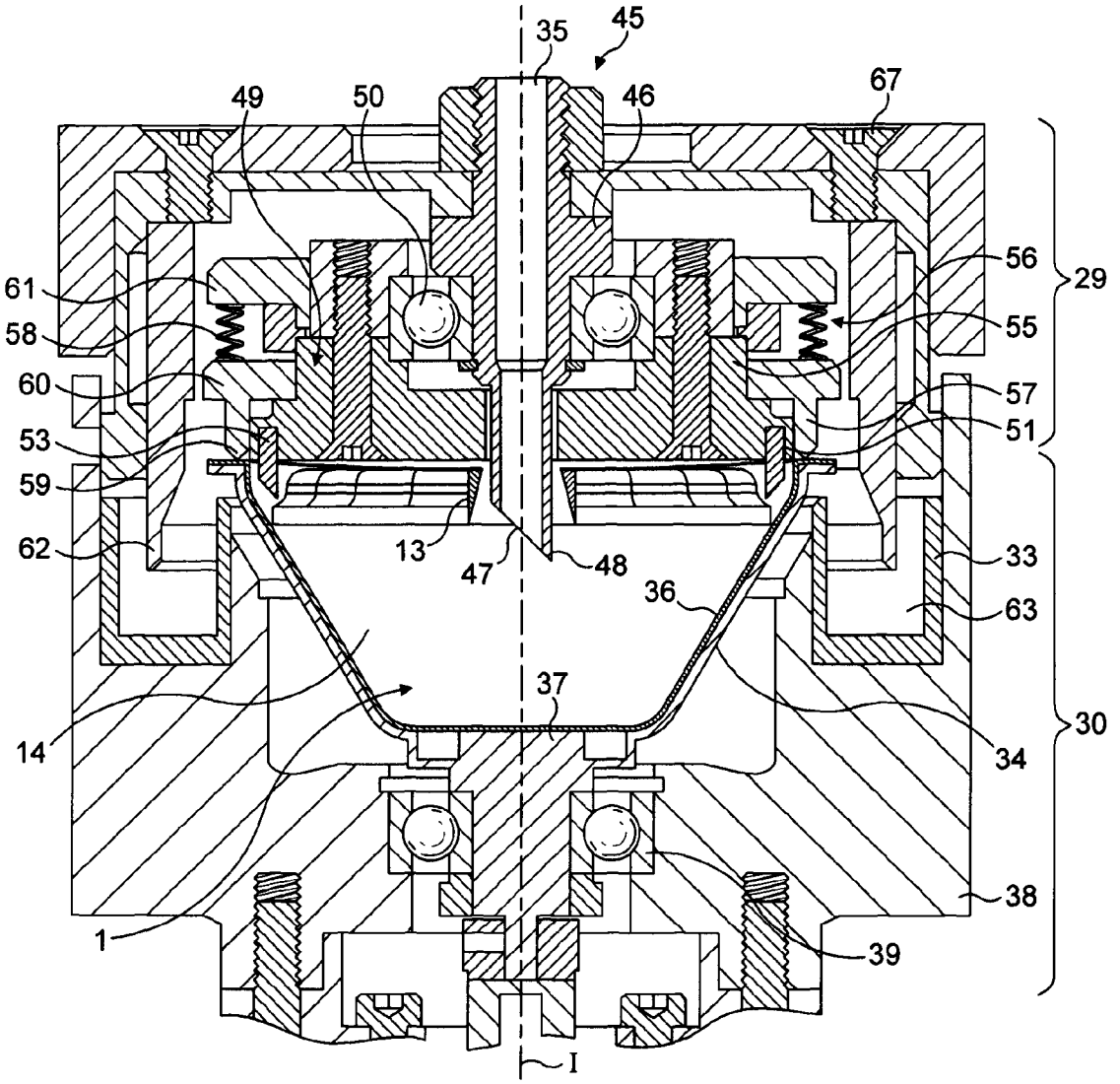
35
45
49
50
46
67
61
58
60
53
59
62
56
55
57
51
29
13
47
48
33
63
36
37
14
34
30
38
1
39
I

FIG. 10

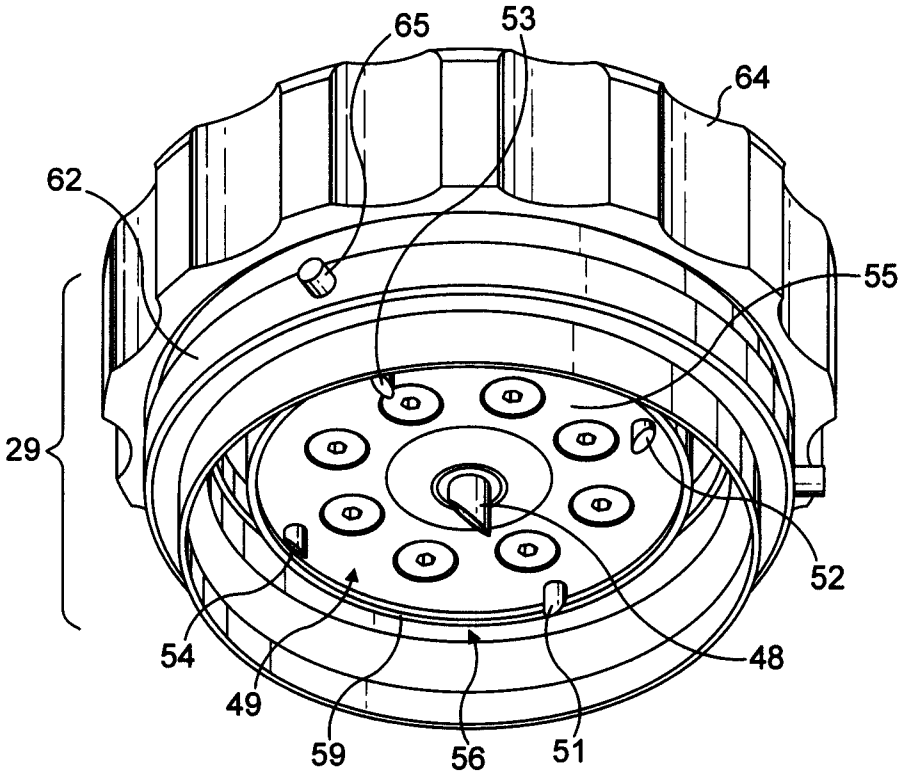

FIG. 11

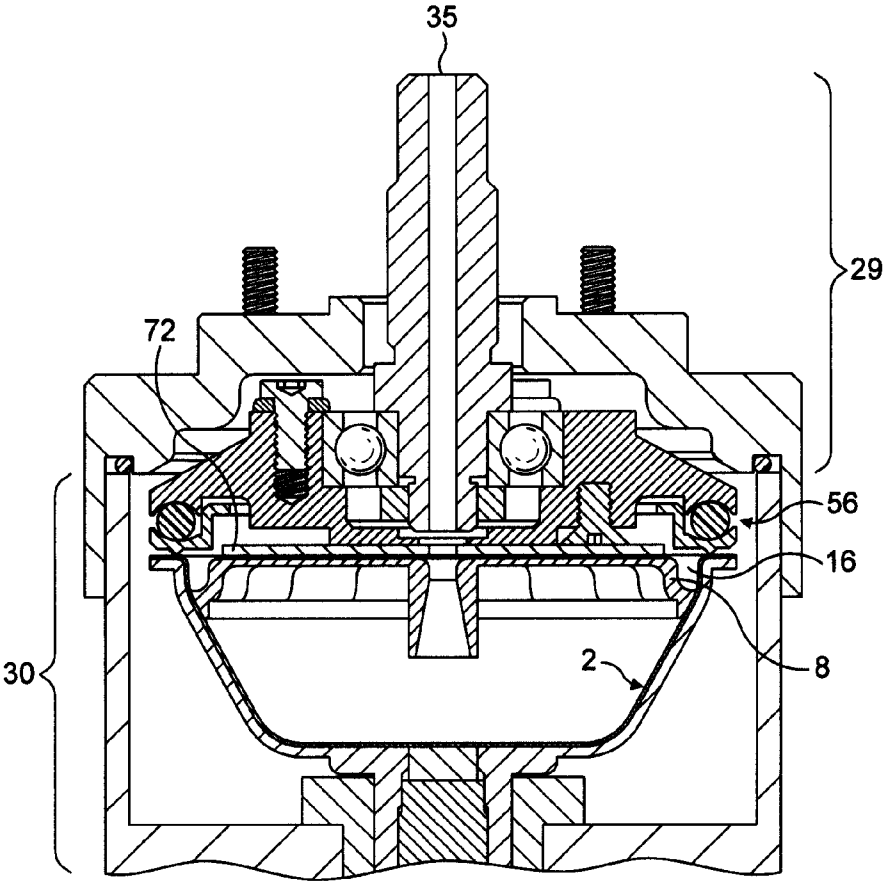

FIG. 12

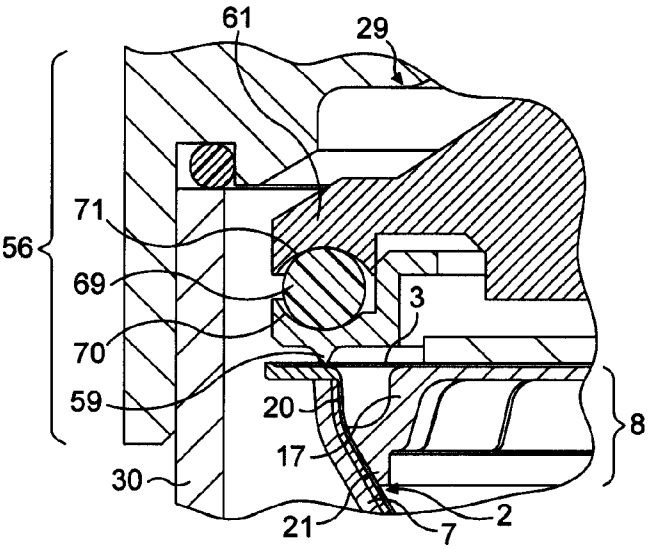

FIG. 13

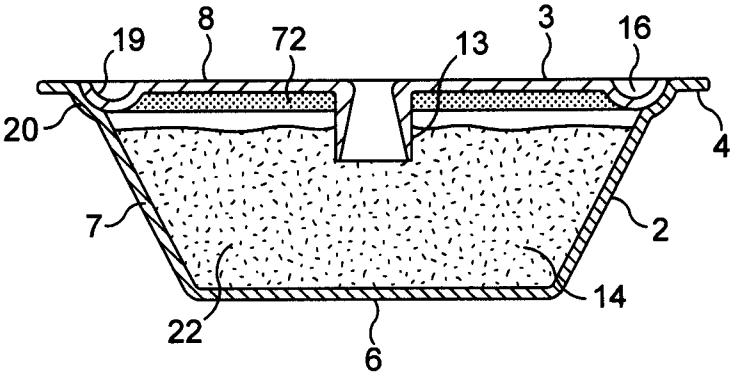

FIG. 14

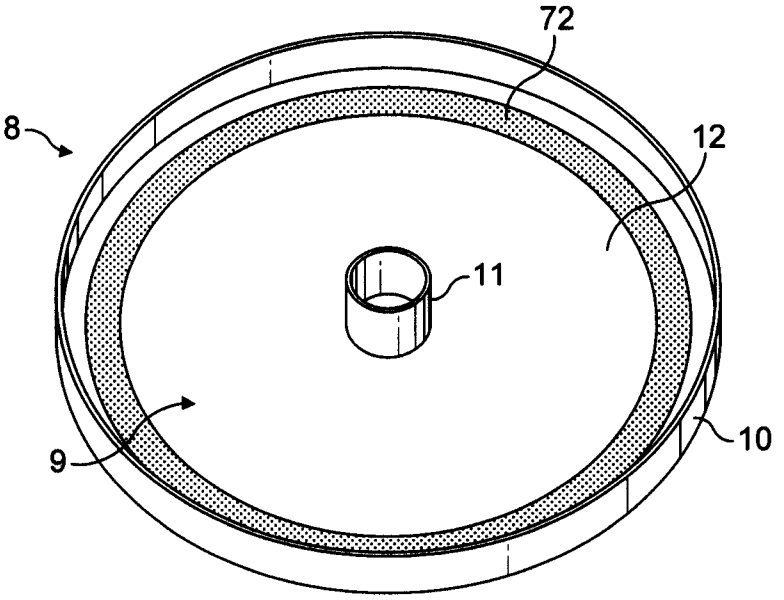

FIG. 15

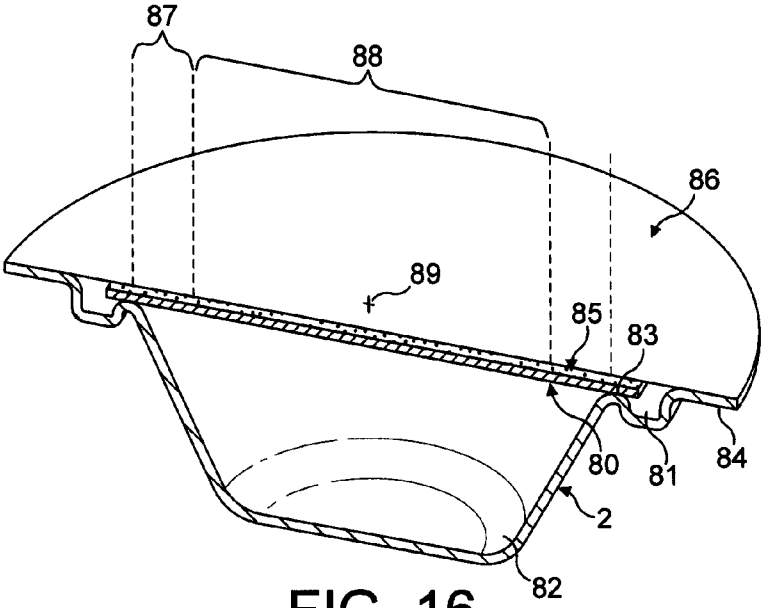

FIG. 16

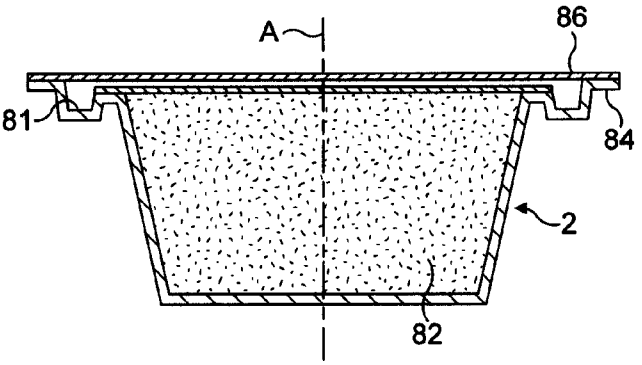

FIG. 17

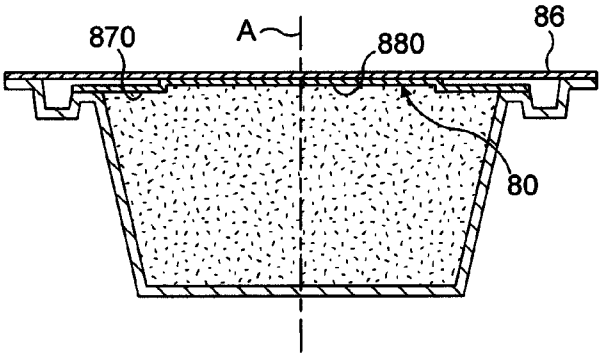

FIG. 18

METHOD FOR PREPARING A FOOD LIQUID CONTAINED IN A CAPSULE BY CENTRIFUGATION AND DEVICE ADAPTED FOR SUCH METHOD

This application is a 371 filing of International Patent Application PCT/EP2008/056412 filed May 26, 2008.

Background

The present invention relates to a device and capsule system for preparing a food liquid from a food substance contained in a receptacle by passing water through the substance using centrifugal forces.

It is known to prepare beverages wherein a mixture consisting of brewed coffee and coffee powder is separated with centrifugal forces. Such a mixture is obtained by bringing hot water and coffee powder together for a defined time. The water is then forced through a screen, on which screen powder material is present.

Existing systems consist of placing the coffee powder in a receptacle which is usually a non-removable part of a machine such as in EP 0367 600B1. Such devices have many disadvantages. Firstly, the coffee powder must be properly dosed manually in the receptacle. Secondly, the centrifuged coffee waste becomes dry and it must be removed by scraping the surface of the receptacle. As a result, the coffee preparation requires a lot of manual handling and is so very time consuming. Usually coffee freshness can also vary a lot and this can impact on the cup quality because coffee comes generally from bulk package or coffee is ground from beans in the receptacle itself.

Also, depending on the manual dosage of coffee and the brewing conditions (e.g., centrifugal speed, receptacle size) the cup quality can vary a lot.

Therefore, these systems have never reached an important commercial success.

In German patent application DE 102005007852, the machine comprises a removable holder into which an open cup-shaped part of the receptacle is placed; the other part or lid being attached to a driving axis of the machine. However, a disadvantage is the intensive manual handling. Another disadvantage is the difficulty to control quality of the coffee due to a lack of control for the dosing of the powder and a lack of control of the freshness of the coffee powder.

Other devices for brewing coffee by centrifuge forces are described in WO 2006/112691; FR2624364; EP0367600; GB2253336; FR2686007; EP0749713; DE4240429; EP0651963; FR2726988; DE4439252; EP0367600; FR2132310; FR2513106; FR2487661; DE3529053; FR2535597; WO2007/041954; DE3529204; DE3719962; FR2685186; DE3241606 and U.S. Pat. No. 4,545,296.

However, the effect of centrifugal forces to brew coffee or prepare other food substances presents many advantages compared to the normal brewing methods using pressure pumps. For example, in "espresso" coffee-type brewing methods, it is very difficult to master all the parameters which influence the quality of extraction of the delivered coffee extract. These parameters are typically the pressure, the flow rate which decreases with the pressure, the compaction of the coffee powder which also influences the flow characteristics and which depends on the coffee ground particle size, the temperature, the water flow distribution and so on.

Therefore, there is a need for proposing a new capsule system and a method adapted therefore for which the extraction parameters can be better and more independently controlled and therefore can be better mastered for controlling quality of the delivered food liquid.

At the same time, there is a need for a way of preparing a food liquid which is more convenient compared to the prior art centrifugal coffee preparation devices and which provides a better in-cup quality with a higher control of important quality parameters such as freshness and accurate dosage of the substance in the receptacle.

SUMMARY OF THE INVENTION

Therefore, the invention relates to a liquid food preparation device for preparing a liquid food from a food substance contained in a single-use capsule, removably insertable in the device, by passing water through the substance in the capsule, comprising a water injection head in the capsule and a capsule holder for holding the capsule in the device,

characterized in that it comprises:

- a water injector, as part of the water injection head, arranged for introducing water along a central axis relative to the capsule holder,
- means for driving the capsule holder in centrifugation around an axis of rotation (I) aligned with said central axis of the capsule holder and,
- at least one opening means for providing at least one liquid delivery outlet in the capsule which is placed in a position relatively offset to said central axis of the capsule holder.

In a mode, the said opening means for providing the liquid delivery outlet(s) is at least one piercing member and/or cutting member and/or burning member.

More particularly, the water injecting head comprises a non-moving water injector and a rotary engaging member for engaging the capsule in closure onto the capsule holder. The engaging member thus rotates in conjunction with the capsule holder during centrifugation of the capsule in the device.

In one mode, the opening means of the liquid delivery outlet(s), e.g., piercing members or other means, can be part of the rotary engaging member of the water injection head.

In an alternative possible configuration, the opening means of the liquid delivery, e.g., piercing members or other means, can be part of the capsule holder.

In a mode, the opening means comprises a series of opening means, e.g., piercing members or other means, distributed along a substantially circular path about the central axis.

The opening means, e.g., piercing members, engages the capsule in such a way that the rotational momentum can be transmitted from the device to the capsule.

In a first mode, the opening members, e.g. piercing members, can be arranged in the device in such a manner to pierce the outlet(s) of the capsule during closure of the device about the capsule. In particular, the opening members are mounted on the rotary engaging member or capsule holder to open the capsule, e.g., pierce the liquid inlet(s) in the capsule, during relative engagement or closure of the rotary engaging member and the capsule holder about the capsule. For instance, piercing members are placed sufficiently in relief relative to the surface of the water injection head to pierce the capsule when the head approaches and engages the capsule in closure.

Preferably, the series of piercing members comprises at least four members for forming at least four small liquid delivery outlets at the periphery of the capsule. The piercing members can be distributed at 90-degree intervals therefore providing a homogeneous liquid delivery at the periphery of the capsule.

The piercing members can engage the capsule and so participate to transfer the rotational momentum to the capsule during rotation.

In another mode, the opening members are configured to create the liquid delivery outlet(s) of the capsule after a certain quantity of water is filled in the capsule.

The capsule may comprise a perforable membrane made of an aluminium and/or polymer materials. In particular, the puncturable membrane can have a thickness between 10 and 200 microns.

In a possible aspect of the invention, the water injector also comprises an opening means such as a piercing member. The opening means can be a piercing member arranged as a hollow piercing tube for injecting water in the centre of the capsule.

The piercing member of the water injector has a diameter of less than 5 mm, preferably, between 0.9 and 2.9 mm. Indeed, the pressure in the capsule increases from the centre to the periphery. The pressure of water in the centre can be close to zero but can gradually increase outwardly. Therefore, a small diameter of the injector provides a small inlet in the capsule to reduce the pressure at the inlet side of the capsule.

The driving means of the capsule holder can be directly connected to the capsule holder or indirectly connected to the capsule holder. A direct connection to the capsule holder can be obtained by a rotational drive assembly comprising a rotary motor and a drive transmission connecting the motor to the bottom of the capsule holder. The drive transmission may comprise a suitable gear reduction or amplification to provide the correct transmission rate to the capsule holder in function of the motor speed. An indirect connection to the capsule holder can be obtained by transmission of the rotational momentum from the water injection head to the capsule holder. In this case, the drive transmission of the rotational drive assembly is connected directly to the upper side of the water injection head, in particular to the rotary engaging member of the head.

The device of the invention may receive capsules made of rigid, semi-rigid and/or soft materials. The capsule may be made of materials such as plastics, aluminium, cellulose-based materials or other biodegradable materials, and combinations therefore. Preferably, the capsule has a peripheral wall made of a pierceable membrane. The membrane can form a sealing lid covering a cup-shaped body which receives the food substance to be brewed.

In a mode, a valve means is arranged downstream of the opening means of the at least one liquid delivery outlet of the capsule. The valve means may comprise an annular closure ring and an elastic means for elastically engaging the ring in closure onto a peripheral part, e.g., an edge, of the capsule.

The invention also relates to a method for preparing a food liquid from a food substance contained in a single-use capsule by passing water through the substance comprising:

- driving the capsule in centrifugal rotation while introducing water in the centre of capsule,
- passing water through the substance to form a food liquid,
- opening at least one liquid delivery outlet in the capsule which is peripherally offset relative to the centre of the capsule and delivering said liquid from said at least one liquid delivery outlet.

In a possible aspect of the method, the at least one liquid delivery outlet is obtained by piercing the capsule in the device. Thus, the capsule can be a gas tightly sealed capsule comprising ingredients such as ground coffee, instant coffee, leaf tea, cocoa, chocolate, a creamer, sweetener, and combinations thereof which can be preserved in protected atmosphere conditions for an extended period of time. The capsule is thus opened at the time of use in the device.

According to an aspect of the method, at least one liquid delivery outlet is obtained by piercing a sealing membrane of the capsule. The membrane can be formed of plastic and/or metal material.

In a mode of the invention, the at least one inlet opening is carried out by mechanical piercing effect of the capsule, e.g., with an external piercing means of the device being displaced relatively to the capsule.

In this case, piercing is carried out when the capsule is inserted in the device such as by effect of the device closing about the capsule.

According to the method, water is introduced in the capsule through an opening of less than 5 mm, preferably between 0.9 and 2.9 mm. As aforementioned, a sufficiently small water inlet is preferred in the capsule in order to reduce the internal pressure of liquid at the inlet side of the capsule and therefore avoid leakage problems.

Preferably, water is introduced in the centre of the capsule after having pierced a water inlet in the centre of the capsule.

According to an aspect of the invention, the food liquid delivered from the capsule is passed via a flow restriction means. The flow restriction means can be configured for providing a pressure drop of at least 0.5 bar of relative pressure during centrifugation. Preferably, the flow restriction means is configured for providing a pressure drop of between 1 and 6 bar, most preferably between 1.5 and 4 bar, of relative pressure during centrifugation. A flow restriction within the flow path of the centrifuged liquid enables to control the release of the centrifuged liquid for improving the interaction of water with the substance within the capsule as well as providing eventually foam to the liquid by the pressure release and the shear stresses which are created at the restriction. More particularly, the flow restriction means enables to maintain a pressure of several bars at the periphery of the enclosure and to retard the release of the liquid.

More particularly, the liquid delivered from the capsule opens a valve for opening when a certain pressure is exerted on the valve by the centrifuged liquid. The valve also regulates the flow of liquid and it reduces the risk of blocking the small outlets provided in the capsule by small size particles, e.g., coffee fines, in particular, at relatively low pressure values.

The valve can be part of the capsule or can be part of the device.

As a result, the system of the invention provides a solution for preparing a food liquid wherein a controlled release of the food liquid can be carried out. For example, the release of liquid can be delayed until a certain pressure is exerted on the valve means. A delayed opening of the valve means enables to improve the interaction between water and the substance contained in the capsule and reduces the risk of the flow blocking in the capsule.

For coffee, for example, it may be advantageous to optimize interaction of water and the ground coffee particles to obtain a good extraction of the coffee and aroma compounds. Moreover, the valve means provides a restriction which may improve the creation of foam or coffee crema.

The valve means can be formed by at least one engaging portion of the device which moves relatively to an engaging portion of the capsule under the effect of the pressurized liquid for making a thin annular laminating passage for the liquid. The laminating passage also enables to create a liquid jet of relatively high velocity that impacts on a wall of the device. As a result, a relatively high amount of foam can be created both due to the restriction that is created by the valve

means and by the impact of the liquid on the impact surface of the device at a relatively high velocity during centrifugation. Depending on the amount of pressure exerted on the valve means by the centrifuged liquid, the restriction caused by the valve means can differ in amplitude.

In a possible mode, the valve means can be calibrated or adjusted to selectively open a liquid passage through the device at a threshold of pressure in the capsule.

The liquid delivered from the capsule can also be filtered by filtering means provided in the capsule. Such a configuration has many advantages because the device is simplified, the filter does not require cleaning since it is discarded with the capsule.

The term "food liquid" has here a broad meaning and encompasses: a culinary liquid such as soup or sauce, a beverage liquid such as coffee extract (obtained from ground and/or instant coffee powder), liquid chocolate, milk (obtained from powder and/or liquid concentrate), tea extract (obtained from instant and/or leaf), etc., or a nutritional liquid such as an infant formula and combinations thereof.

The terms "brewing" or "brewed" is not to be taken in the narrow sense of extracting under pressure a liquid from a non-entirely soluble substance (such as ground coffee or leaf tea) but is to be taken in a broader sense as encompassing the interaction processes of a food substance and a liquid, preferably water, including the processes of extraction, infusion, adsorption, dissolution, dilution, dispersion, mixing, emulsifying, foaming and the like.

The term "piercing" is to be taken in its broad sense and it includes the mechanical and/or thermal processing for providing a through-opening in a wall of the capsule.

BRIEF DESCRIPTION OF THE DRAWINGS

Additional features of the invention will appear in the detailed description of the figures which follows.

FIG. **1** is a perspective view from above of a capsule of the invention;

FIG. **2** is a perspective view from below of the capsule of the invention;

FIG. **3** is perspective view of the capsule with the sealing foil removed;

FIG. **4** is a cross section view of the capsule of the invention;

FIG. **5** is a perspective view of the lid from above of the capsule of the invention;

FIG. **6** is a perspective view of the lid from below of the capsule of FIG. **4**;

FIG. **7** is a perspective view of the beverage production device of the invention;

FIG. **8** is a perspective view of the beverage production module in open mode;

FIG. **9** is a cross-sectional view along line A-A of the beverage production module in a closed mode about the capsule;

FIG. **10** is an enlarged view of the view of FIG. **9**;

FIG. **11** is a view of the water injection assembly of the module of FIGS. **9** and **10**;

FIG. **12** is a cross sectional view of a beverage production module similar to FIG. **9** but for another embodiment of the invention;

FIG. **13** is a detail view of the module of FIG. **12**;

FIG. **14** is a cross section view of a variant of the capsule of the invention;

FIG. **15** is a view from underside of the lid of the capsule of FIG. **14**;

FIG. **16** is a perspective cross sectional view of a capsule according to another mode of the invention;

FIG. **17** is a cross sectional view of the capsule of FIG. **16**;

FIG. **18** is a cross sectional view of a capsule according to still another mode.

DETAILED DESCRIPTION OF THE INVENTION

As shown in FIGS. **1** and **2**, a preferred capsule **1** of the invention generally comprises a dished body **2** onto which is sealed a sealing foil **3**. The sealing foil **3** is sealed onto a peripheral rim **4** of the body at a sealing annular portion **5**. The rim **4** can extend outwards forming a small annular portion, e.g., of about 2-5 mm. The dished body comprises a bottom wall **6** and a side wall **7** which preferably widens in direction of the large open end of the body opposed to the bottom wall. The dished body is preferably rigid or semi-rigid. It can be formed of a food grade plastics, e.g., polypropylene, with a gas barrier layer such as EVOH and the like or aluminium alloy or a complex of plastic and aluminium alloy. The sealing foil **3** can be made of a thinner material such as a plastic laminate also including a barrier layer or aluminium alloy or a combination of plastic and aluminium alloy. The sealing foil is usually of a thickness between 50 and 250 microns, for example. The sealing foil member can be pierced for creating the water inlet and the beverage outlet(s) as will be described later in the description.

In relation to the embodiment of FIGS. **3** to **6**, the capsule of the invention comprises an inner member forming a lid **8** which is inserted in the dished body. The lid **8** and body **2** delimit together an internal enclosure **14** for receiving the food substance **22**. Preferably, the capsule forms a symmetry of revolution around a central axis A. However, it should be noted that the capsule may not necessarily have a circular section around axis A but may take another form such as a square or a polygonal form. The lid **8** is illustrated in FIGS. **5** and **6**. The lid can take the form of a disc of plastic comprising a central portion **9** and a peripheral portion **10**. The central portion can be substantially flat and may comprise a inlet port **11** for enabling the introduction of a water injection member of the beverage production device. In the internal side **12** of the lid, the inlet port can extend by a tubular inlet portion **13** which serves for ensuring the water is guided toward the direction of the bottom of the body to ensure complete wetting of the substance in the enclosure and so reduced risk of leaving for example "dry powder spots". Preferably, the inlet port is closed by a breakable or puncturable closure part **15**. This part serves to prevent substance of the enclosure from filling the interstice between the upper surface of the lid and the sealing foil. The lid further comprises a peripheral portion **10** including a collecting recess **16**. The collecting recess forms a U-shape in transversal section (FIG. **3**) which opens in the direction of the sealing foil. The recess is preferably continuously extending at the periphery of the lid although it can be replaced by several discontinuous recessed portions which may be separated by reinforcing elements or walls, for example. The collecting recess comprises an inner peripheral portion of wall **17** into which is provided a series of outlet openings **18** forming a fluid communication between the enclosure **14** and the collecting recess **16**.

The outlet openings also form a restriction in the flow of the centrifuged liquid in the enclosure. The centrifuged liquid is forced to pass the openings which can be sized as a function of the type of beverage to be produced. For instance, for espresso or ristretto coffee extract, it can be advantageous to provide smaller openings than for lungo or "Americano" coffee extract. For a same rotational speed, smaller openings

create a higher resistance to the centrifuged liquid which remains longer in the capsule. As a consequence, the interaction between water and the coffee particles is higher and liquid can charge more in coffee solids.

As illustrated in this example, the openings may be slots or holes which are distributed at intervals in the inner peripheral portion of wall **17**. For example, the number of slots can range of from 5 to 200, preferably of from 10 to 100. These slots have preferably a width that is smaller than the statistical average size of the particles of the substance. For example, the slots have a width of less than 500 microns for a substance which is ground coffee. The slots may extend if necessary on the central portion **9** or in the bottom of the recess **16**. The slots can be replaced by holes of circular section having a diameter smaller than the statistical average size of the particles of the substance.

The collecting recess **16** forms a peripheral groove of small depth, e.g., between 2 and 10 mm to allow the introduction of piercing members through the sealing foil to produce outlets for the brewed liquid which is produced in the capsule as will explained later in the description. The collecting recess **16** further comprises an outer peripheral portion **19** forming an edge bearing onto a seat portion **20** of the dished body. The outer portion **19** can be engaged in the seat portion **20** by a more or less tight fit engagement. An additional sealing portion **21** extending along the internal surface of the side wall of the body and in the direction of the bottom of the dished body can extend from the recess to create further sealing against possible ingress of liquid between the lid and the inner surface of the body of the capsule. Of course, the form of the collecting recessed means can take different configurations without departing from the scope of the invention. For example, the recess **16** can be formed by the lid **8** and the side wall **7** of the dished body (as illustrated in FIG. **13**). In this case, the outer peripheral portion **19** can be omitted.

As illustrated in the figures, the series of outlet openings, e.g., slots **18**, are preferably placed at or close to the widening part of the enclosure relative to the central axis A. Therefore, the centrifuged liquid will tend to be guided along the inner surface of the side wall of the body, up to the inner side **12** of the lid, and then through the slots. The lid **8** is fully closed by the sealing foil **3** when it is sealed onto the rim of the dished body. In a possible alternative, the sealing foil could cover only the collecting recess including the region of the slots.

It should be noticed that the lid **8** can be a rigid or semi-rigid member made of thermoformed or injected plastic for instance. However, this part could also be made of a flexible membrane which is sealed to the inner surface of the dished body without departing from the scope of the invention.

It can also be noticed that a filter wall can also be placed inside the enclosure against the inside surface **12** of the lid. A filter wall can provide an improved filtration, for example, for substance of very thin particle size and/or for delaying the release of the centrifuged liquid out of the enclosure by creating a higher pressure drop. A filter wall can be a paper filter or thin plastic film which is glued onto the surface **12** of the lid. The lid can be simply inserted in the dished shaped body or be fixed by any suitable connection means such as by ultrasonic welding.

The system including a capsule of the invention and a beverage preparation device is illustrated in FIGS. **7** and **8** and described now.

Thus, the system comprises a capsule **1** as aforementioned and a beverage preparation device **23**. The device has a module **24** into which a capsule can be inserted. The capsule contains a food substance for being brewed and the capsule is removed from the module after use for being discarded (e.g., for waste or recycling of the organic and inorganic raw materials). The module **24** is in fluid communication with a water supply such as a water reservoir **25**. A fluid transport means such as a pump **26** is provided in the fluid circuit **27** between the module and the water supply. A water heater **28** is further provided to heat water in the fluid circuit before water enters the module. The water heater can be inserted in the fluid circuit to heat fresh water coming from the reservoir or alternatively can be in the water reservoir that becomes a water boiler in such case. Of course, water can also be taken directly from a domestic water supply via a water plug connection.

Water can be fed in the module **24** at low pressure or even at gravity pressure. For example, a pressure of between 0 and 2 bar above atmospheric pressure can be envisaged at the water inlet of the module. Water at higher pressure than 2 bar could also be delivered if a pressure pump is utilized such a piston pump.

The brewing module **24** can comprise two main capsule encasing sub-assemblies **29**, **30**; mainly comprising a water injection sub-assembly or water injection head and a liquid receiving subassembly including a capsule holder. The two subassemblies form positioning and centering means for the capsule in the device.

The two assemblies' closes together to encase a capsule therein for example by a bayonet-type connection system **31**. The liquid receiving subassembly **30** comprises a liquid duct **32**, for example, protruding on a side of the subassembly for guiding the centrifuged liquid coming out of the capsule to a service receptacle such as a cup or glass. The liquid duct is in communication with a liquid receiver **33** forming a cylindrical wall placed at a short distance about a capsule holder formed by a rotating drum **34** into which the capsule is inserted as illustrated in FIG. **8**. The liquid receiver defines with the drum an intermediate cavity **63** for collecting the liquid as will be explained later in the description. Below the liquid receiving subassembly **30**, are placed means for driving the capsule receiving drum **34** in rotation inside the subassembly.

The driving means comprise preferably a rotary motor **40** which can be supplied by electricity or gas power.

The water injection subassembly comprises a water inlet side comprising a water inlet **35** communicating upstream with the water fluid circuit **27**.

In relation to FIGS. **9** and **10**, the rotary drum **34** is shaped as a hollow capsule holder with an internal cavity **36** complementary shaped to receive the capsule. The rotary drum **34** prolongs itself axially by a rotating shaft **37** which is maintained in rotational relationship relative to an outer base **38** of the liquid receiver **33** by a rotational guiding means **39** like a ball bearing or needle bearing. Therefore, the rotary drum is designed to rotate around a median axis I whereas the outer base **38** of the receiver is fixed relative to the device. The liquid receiver **33** can be fixed to a housing **43** of the motor by bolts **44** for example. A mechanical coupling **41** is placed at the interface between the rotating shaft **37** of the drum and the shaft **42** of the motor **40**.

Considering the water injection subassembly **29**, as illustrated in FIGS. **10** and **11**, it comprises a centrally arranged water injector **45** which is fixed relative to longitudinal axis I of the device. The water injector comprises a central tubular member **46** for transporting water from the inlet **35** to a water outlet **47** that is intended to protrude inside the enclosure **14** of the capsule. The water outlet is formed of a puncturing means **48** such as a sharp tubular tip that is able to create a puncture hole through the closing foil of the capsule and through the eventual breakable part of the tubular inlet **13** of the lid.

About the water injector is mounted a capsule rotary engaging part **49**. The engaging part **49** has a central bore for receiving the water injector and rotational guiding means such as a ball or needle bearing **50** inserted between the part **49** and the injector **45**. The engaging part further comprises outlet piercing members **51**, **52**, **53**, **54** protruding from a disc-shaped engaging wall **55** of the part **49**. The piercing members can be small cylindrical portions with a slanted cutting surface able to cut or perforate small holes in the sealing foil **3** of the capsule. The piercing members are arranged at the periphery of the wall **55**, preferably evenly distributed to provide several openings in the capsule for the centrifuged liquid to leave the capsule forming several streams of liquid.

According to one aspect of the invention, the water injection subassembly **29** further comprises a valve system **56** for controlling the flow of liquid that is discharged from the device. The valve system **56** can be arranged on the capsule rotary engaging part **49** in the form of an annular engaging portion **57** which is biased under the force of elastic loading means **58** such as springs. The annular engaging portion **57** includes a pressing peripheral surface **59** which applies a closing force on the peripheral rim **4** of the capsule to be able to restrict the flow of liquid under the force of the elastic loading means. The surface **59** can form a cone or "V" for increasing the sealing pressure in a localized area. The engaging portion **57** further comprise an internal base portion **60**. The elastic loading means **58** is thus inserted in a space located between the base portion **60** and a counter-force portion **61** of the engaging part **49**. Therefore, at a rest position, the engaging portion **57** of the valve system keeps closing on the rim of the capsule under the compressive effect of the resilient means **58**.

The capsule engaging subassembly **29** may further comprise a tubular portion of skirt **62** which protrudes in the internal annular chamber **63** of the liquid receiving subassembly **30** when the two subassemblies are closed relatively one another about a capsule. This tubular portion of skirt **62** forms an impact wall for the centrifuged liquid under pressure that passes through the valve system. This portion **62** is preferably fixed on the subassembly **29**. The subassembly further comprises a handling portion **64** for facilitating the connection on the liquid receiving subassembly **30**. This handling portion **64** can have a knurled peripheral surface for handling. The handling portion can be fixed on the fixed base of the subassembly **29** by screws **67**.

This portion could of course be replaced by a lever mechanism or a similar handling means.

As already mentioned, connection means are provided for the relative connection of the two subassemblies **29**, **30**. For example, small pins **65** are provided on the side of the tubular surface of the water injection subassembly **29** which can engage side locking openings **66** on the tubular surface of the liquid receiving subassembly **30**. Therefore, connection between the two subassemblies can be carried out by a rotational angular or helical closure movement for enabling the pins to engage the oblong openings **66**. Of course, other connection means can be envisaged to replace this bayonet-type connection means. For instance, a threading means or a translational closure means can be envisaged by any person skilled in the art.

The capsule system of the invention works basically according to the following principle. The capsule device is opened by moving the two subassemblies **29**, **30** relatively one another, e.g., by disconnecting the bayonet-type connection and separating the two subassemblies' **29**, **30**. As a result, a single-use sealed capsule **1** containing a food substance can inserted in the device, i.e., placed in the cavity of the rotating drum **36**. The capsule can be placed in the device while the capsule being gastight closed by the sealing foil **3**. The device is then closed by the subassembly **29** being connected back onto the subassembly **30** and locked by the connection means. In the locked position, the capsule is opened by the water injector that pierces through the sealing foil of the capsule and introducing itself through the water inlet **35** of the capsule. At the same time, several liquid outlets are pierced at the periphery of the sealing foil by the outlet piercing members **51**-**54**. Water can thus be introduced in the capsule via the central water injector **45**. Venting holes can be produced in the injection subassemblies to allow gas to escape the capsule while water is introduced in. The capsule can be driven in rotation by activating the rotary motor **40**. The start of the centrifugal operation can be carried out at the same time as water injection start being introduced in the capsule or slightly after or before this water injection operation starts.

For instance, it might be advantageous for brewing ground coffee, to allow during several seconds that water fills in the capsule before starting the centrifugal operation by rotating the capsule. Thus, water can properly infiltrate in the coffee before, the liquid is centrifuged thereby avoiding coffee area to remain dry in the coffee portion. The centrifugation is carried out by rotating the capsule around the central axis I of rotation of the device that is preferably aligned to the central axis A of the capsule. The rotational speed is preferably of from 1000 to 12000 round-per-minutes (rpm), more preferably of from 1500 to 8000 rpm. A control unit can be provided in the device for setting the rotational speed according to the nature of the liquid to be brewed and/or the substance in the capsule. The higher the rotational speed, the higher the pressure is exerted at the peripheral wall of the capsule and the more substance is compacted on the sidewall of the capsule. It is important to notice that higher rotational speeds promote brewing of coffee extract containing a lower solid content since the residence time of liquid in the coffee bed is shorter. Lower rotational speeds provide coffee of higher strength (coffee solid content) since the residence time of liquid in the capsule is longer. Brewing takes place in the capsule by water traversing the substance thereby providing an extraction or partial or total dispersion or dissolution of the substance. As a result, a centrifuged liquid is allowed to pass through the plurality of outlet openings **18** provided in the capsule, e.g., through the lid **8**.

Under the effect of centrifugal forces, the substance, such as coffee powder, tends to compact itself radially against the peripheral walls **7**, **17** of the enclosure of the capsule. whereas water is forced to flow through the substance. This results in the substance being both compacted and intimately wetted by water. Due to the high rotational movement of the capsule, the centrifugal forces exert themselves uniformly on the mass of the substance. Consequently, the water distribution is also more uniform compared to usual methods using a pressure pump to exert the pressure in the capsule. As a result, there is lower risk of preferential flow path through the substance which could lead to areas which are not properly wetted and so not properly brewed, dispersed or dissolved. With ground coffee powder, the liquid that reaches the internal sidewall of the capsule is a liquid extract. This liquid extract is then forced to flow upwards along the internal surface of the sidewall of the capsule. The widening of the sidewall **7** of the capsule promotes the upward flow of the liquid in the capsule in direction of the openings.

These outlet openings **18** of the enclosure of the capsule are sized as a function of the substance stored in the capsule. Small openings such as slots of small width or holes of small

diameter tend to provide a filtering function to retain the solid particles in the enclosure of the capsule while allowing only the liquid extract to pass the openings. Also as aforementioned, the openings may also provide a flow restriction that impacts on the interaction of water with the substance and on the creation of foam or crema on the top of the beverage. These holes also form sufficient restrictions that create shear forces and consequently generate foam or coffee crema. Some gas contained in the capsule can become entrapped in the liquid and forms, due to the pressure release after the flow restriction, a multitude of small bubbles in the liquid.

Also, the valve system **56** of the device can start opening as pressure of liquid increases on the valve when leaving the capsule. Therefore, a certain time delay before opening can be controlled by the valve system to enable sufficient interaction between water and the substance contained in the capsule. This controlled delay depends on various parameters such as the centrifugal speed, the force exerted by the elastic loading means (i.e., spring stiffness), the pressure drop as created by the substance and outlet openings, etc. The opening of the valve system occurs by the pressing surface **59** of the valve system lifting as pressure of liquid increases on its internal surface. It can be noted that the capsule of the rim can also be substantially flexible to flex under the effect of the pressure of liquid. Therefore, the relative movement between the pressing surface and the capsule create a small passage for the liquid to escape out of the small interstice upstream of the valve system. At relatively high rotational speeds, a jet of liquid can be formed that impacts on the internal surface of the portion of skirt **62**. The liquid starts to fill the cavity **68** of the liquid receiving subassembly and liquid can drain through the liquid duct **32** to be collected in a cup or glass placed underneath.

In the other mode of the invention illustrated in FIGS. **12** and **13**, the same numeral references have been taken to identify the same or equivalent technical means. In this mode, the valve system **56** differs in that the elastic loading means is obtained by a rubber elastic O-ring **69** inserting between a pinching surface **59** and a fixed portion **61** of the water injection subassembly **29**. The O-ring is maintained between two concave portions **70**, **71** of the valve system. Again during brewing, the pressure of liquid in the capsule tends to lift the pinching surface **59** to create a passage between the rim **4** of the capsule and the pinching surface. The pinching surface can be shaped with a sharp tip or edge that can create a concentration of forces on the rim. Of course, it could be imagined that the elastic loading means and the pinching portion are the same element. For example, the pinching portion can be made of rubber-elastic material.

In the mode of FIG. **12** or **13**, the water injector can be a simple water inlet in the capsule with no puncture means. In this case, the capsule is pre-opened before it is inserted in the device, i.e., the sealing foil is removed by peeling, or a central hole is perforated before the capsule is inserted in the device. Furthermore, a sealing engagement of the water injector can be performed by a sealing means **72** which applies a certain sealing pressure on the top surface of the capsule. Therefore, water is prevented from leaking along the top surface of the capsule and from by-passing the capsule to release directly through the liquid outlet.

The capsule of the invention can take various embodiments such as the one illustrated in FIGS. **14** and **15**. The general structure of the capsule is the same as for the previous embodiment except that the outlet openings are formed by a filter paper, a woven or non-woven portion or another meshed or porous membrane **72**. Thus, the lid **8** which is inserted in the dished body **2** comprises a circumferential band of a porous material. The porous material provides restriction of the flow, creating a certain pressure drop, e.g., between 0.5 and 4 bar, and leading to a filtering of the solid particles. In particular, the size of the pores of the material can be chosen to retain also the coffee fines, i.e., the particles of particle size as low as 90 microns. The pressure drop is also obtained when the overall open surface of the porous band is lower than 50% of the total surface area of the surface of the band. The paper, fabric, meshed or porous material can be formed of a band or bands which can be welded or otherwise combined to the lid.

In another possible mode, the recess **16** can be filled by a porous compressible material to provide a filtering function as well. For example, the material could be sponge or fabric.

According to FIGS. **16** and **17**, the capsule in the system of the invention may also comprise an enclosure which is formed of a dished body **2** and a porous wall **80**. The dished body comprises a main cavity **82** for storing the food substance and a peripheral recess **81** for receiving the liquid extract that traverses the porous wall **80** during the centrifugation process. The recess **81** is delimited by an inner edge **83** and an outer rim **84**. The porous wall **80** can be attached to an inner edge **83** of the recess **81**. A gastight foil membrane **86** is preferably attached onto the outer rim **84** of the body. The inner edge is preferably placed below the outer rim in order to let a free space **85** between porous wall **80** and the foil membrane **86**. The porous wall can be sealed by heat or ultrasonic welding onto the inner edge **83**.

The porous wall **80** can have openings (i.e., pores) along its whole surface or along a peripheral portion of wall only. FIG. **16** shows a portion of the wall **87** which normally have the openings whereas the central portion **88** is free of openings.

In a different mode the two portions **87**, **88** have the openings.

The pressure is dependent on various factors, in particular, the rotating speed of the capsule in the device, the radius at the peripheral portion of wall **87** (specially, determining the relative centrifugal force "g" at the portion **87**) and the size of the openings. The size of the openings is preferably comprised between 1 and 600 microns. More preferably, the size of the openings is comprised between 10 and 200 microns forming a flow restriction means which creates a certain drop of pressure during the centrifugation of the capsule along its central axis. The overall surface area of the pores of the porous wall should be lower than 50% of the total surface area of said wall, most preferably lower than 40%.

The capsule of FIGS. **16** and **17** can be pierced in its centre **89** for injecting water in the enclosure **82** containing the substance. As a result both the outer foil **86** and the inner wall **80** are pierced. The capsule is inserted in a device as described before. The capsule is driven in centrifugal rotation at a determined speed, e.g., between 1000 and 16000 rpm, more preferably between 5000 and 12000 rpm. The brewing or dissolution process takes place in the enclosure by water traversing the substance. As a result of the centrifugal effect, the food liquid traverses the porous portion of wall **87**, (eventually also part of the portion **88** if porous) and leaves the enclosure via the interspace **85** then via the annular recess **81**. The liquid is allowed to leave the capsule via pierced holes made in the foil above the recess **81**.

FIG. **18** shows a similar capsule but with the inner porous wall **80** comprising a central portion **880** which is sealed to the external gastight foil **86** and a peripheral portion **870** which is distant from the foil **86**. In this example, the peripheral portion **870** comprises the outlet openings of the enclosure. The central portion **880** may have openings or may be free of openings. In this embodiment, no liquid is allowed to go between the outer foil **86** and the inner portion of wall **880**

since both are sealed together. If a sufficient pressure drop is created at the portions of wall **870** in the capsule, the device may not necessarily be provided with an additional flow restriction means such as the valve described previously. In this case, the flow restriction means in the capsule suffices to maintain a sufficient pressure in the enclosure and so obtain a good interaction between the substance, e.g., ground coffee and water. For example, good espresso-type coffee with crema can be produced with a capsule comprising a woven polymer membrane comprising pores within a range of between 10 to 200 microns.

It can be noted that the peripheral portion of the capsule comprising the restriction means, e.g., openings, can be substantially oriented perpendicularly to the axis of rotation as in the examples of FIGS. **16** to **18** or inclined relative to said axis as in the example of FIGS. **1** to **6**.

In another possible mode, the flow restriction can be obtained or complemented by chicanes in the capsule and/or in the device or a similar structure forming a tortuous flow path for the liquid.

The system capsule of the invention provide remarkable brewing results with solid contents which are higher than with usual systems. The results are very reproducible from capsule to capsule. Surprisingly, crema is also remarkably improved with a creamier, more stable and thicker texture.

It can be noted that the pressure drop of the restriction means can be measured by a pressure measurement test consisting of filling water under pressure in the capsule and measuring the pressure of water at the injection point at which liquid is allowed to pass the restriction means, i.e., the valve system.

Of course, the invention may encompass many variants which are included in the scope of the patent claims that follow.

What is claimed is:

1. A method for preparing a food liquid from a food substance contained in a sealed, single-use capsule, in a liquid food preparation device comprising a water injection head for injecting water in the capsule and a capsule holder for holding the capsule in the device; the capsule configured for removable insertion in the capsule holder and comprising a cup shaped body covered by a sealing lid that has a peripheral rim by passing water through the substance, the method comprising:

piercing the sealing lid of the sealed capsule by a piercing member of a water injector of the water injection head and introducing water by the water injector into a generally central portion of the capsule,

forming a series of liquid delivery outlets by a series of additional piercing members in the sealing lid of the capsule at the periphery of the sealing lid near the peripheral rim of the body,

after the outlets are formed in the lid of the capsule, centrifugally rotating the capsule about its central axis for passing water outwardly from the generally central portion through the substance and then toward the liquid delivery outlets of the lid to form the food liquid,

delivering the food liquid as several streams of liquid from the delivery outlets formed in the lid of the capsule, and

passing the food liquid delivered from the capsule through a restriction valve and wherein the restriction valve opens when a certain pressure is exerted by centrifuged food liquid on the restriction valve.

2. The method according to claim **1**, wherein the water is introduced in the capsule through an opening of the piercing member the water injector that has a diameter of between 0.9 and 5 mm.

3. The method according to claim **1**, which further comprises:

providing a water inlet in a central portion of the capsule, wherein the water is introduced from the water injector into the water inlet in the central portion of the capsule; and providing the capsule with sloped walls from a narrower capsule bottom to a wider capsule top portion to assist in directing the liquid to the outlets when the capsule is rotated.

4. The method of claim **1**, wherein the water injection head introduces the water into the capsule along the central axis of the capsule holder.

5. The method of claim **1**, wherein the series of piercing members for forming the outlets are distributed along a substantially circular path about the central axis of the capsule holder.

6. The method of claim **5**, wherein the series of piercing members comprises at least four members for forming at least four liquid delivery outlets around the periphery of the capsule.

7. The method of claim **1**, which further comprises contacting the capsule by a rotary engaging member after the capsule is inserted into the device, and providing the delivery outlet in the rotary engaging member or the capsule holder during relative engagement or closure of the rotary engaging member and the capsule holder.

8. The method of claim **1**, wherein the piercing member is arranged as a hollow piercing tube for injecting water into the capsule.

9. The method of claim **8**, wherein the piercing member has a diameter of between 0.9 and 5 mm.

10. The method of claim **1**, which is conducted in a system comprising the liquid food preparation device.

11. A method for preparing a food liquid from a food substance contained in a sealed, single-use capsule in a liquid food preparation device comprising a water injection head for injecting water in the capsule and a capsule holder and a capsule holder for holding the capsule in the device; the capsule; the capsule configured for removable insertion in the capsule holder and comprising a cup-shaped body having sloped walls from a narrower capsule bottom to a wider capsule top portion covered by a sealing lid that has a peripheral rim by passing water through the substance, the method comprising:

piercing the sealing lid of the sealed capsule by a piercing member of a water injector of the water injection head and introducing water by the water injector into a generally central portion of the capsule,

centrifugally rotating the capsule about its central axis for passing water outwardly from the generally central portion through the substance and then along the sloped walls towards the peripheral rim of the lid to form the food liquid, forming an opening comprising a series of liquid delivery outlets along the peripheral rim of the sealing lid of the capsule before centrifugally rotating the capsule, wherein the outlets are formed by a series of piercing members and to assist in allowing the water to pass through the food substance and to allow the food liquid to exit the capsule,

delivering the food liquid from delivery outlets formed in the lid of the capsule as several streams of liquid after the water has passed through the food substance, and

passing the food liquid delivered from the capsule through a restriction valve and wherein the restriction valve opens when a certain pressure is exerted by the centrifuged food liquid on the restriction valve.

12. The method of claim **11**, wherein the restriction valve is further provided by a valve means, and wherein the valve means is adjusted to selectively open a liquid passage through the capsule at an exerted threshold of pressure build-up inside the capsule.

13. The method of claim **12**, wherein the valve means comprises an annular closure ring and an elastic means for elastically engaging the ring in the closure onto a peripheral part of the capsule.

14. The method of claim **13**, wherein the valve means is formed by at least one engaging portion of the device which moves relatively to an engaging portion of the capsule exerted on the valve on the pressurized liquid such that foam is created due to the restriction which is created by the valve means and by the impact of the liquid on the surface of the device.

* * * * *