Petitioner's Demonstratives

Nespresso USA, Inc. v. K-fee System GmbH

IPR2024-00257 U.S. Patent No. 11,487,722	IPR2024-00254 U.S. Patent No. 11,465,829
IPR2024-00304 U.S. Patent No. 11,465,830	IPR2024-00299 U.S. Patent No. 11,554,910

March 20, 2025

Table of Contents

1. **Institution grounds**……Slide 4
2. **A POSITA would have been motivated to combine the cited art** ……Slide 17
   a) Jarisch/Jarisch 929 *('722 Patent, '829 Patent, '830 Patent, '910 Patent)*……Slide 18
   b) Rossi *('722 Patent, '829 Patent, '830 Patent, '910 Patent)* …… Slide 69
   c) Yoakim's disclosure *('722 Patent, '829 Patent, '830 Patent, '910 Patent)*……Slide 106
   d) Castellani *('722 Patent, '829 Patent)*……Slide 122
   e) Rapparini *('722 Patent, '830 Patent, '910 Patent)* ……Slide 135
3. **The cited art teaches and/or renders obvious all the challenged claims**…… Slide 149
   a) Free of a filter *('722 Patent, '829 Patent, '830 Patent, '910 Patent)*……Slide 159
   b) Grooves spaced a distance and coverage *('910 Patent)* ……Slide 177
   c) Side wall identifier *('910 Patent, '722 Patent)*……Slide 191

Table of Contents (cont'd)

3. **The cited art teaches and/or renders obvious all the challenged claims (cont'd)**
   - d) Hot water *('910 Patent)* ..... Slide 198
   - e) Electrically conductive identifier *('910 Patent)* ..... Slide 202
   - f) Identifier with concavity/convexity *('910 Patent)* ..... Slide 210
   - g) Groove that is laterally offset *('829 Patent)* ..... Slide 217
   - h) Ledge *('830 Patent)* ..... Slide 229
4. **The level of skill of the POSITA** ..... Slide 243
5. **Glucksman's testimony should be afforded little weight** ..... Slide 248
6. **District Court Claim Construction** ..... Slide 260

Overview of the Challenged Patents

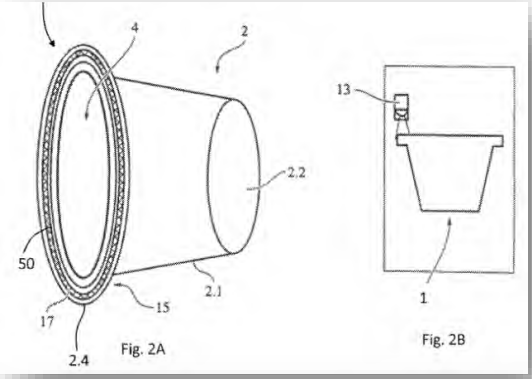

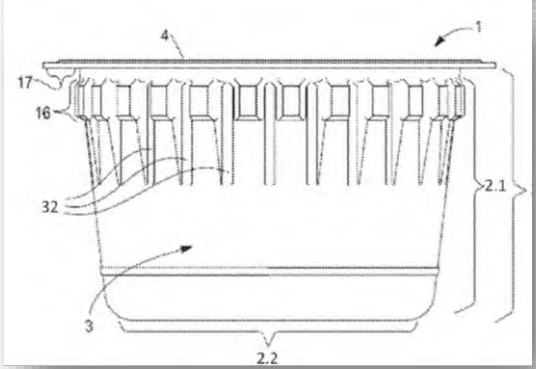

EX1001, Figs 2& 19 (same in all four IPRs)

The object of the present invention is therefore to provide a portion capsule which only is suitable for a specific coffee machine.

The object is accomplished according to the present invention by a portion capsule for producing a beverage, comprising a base element having a cavity in which a beverage raw material is provided and which is closed by a membrane fastened to the base element, wherein it has an identifier, which allows to individualize the respective portion capsule.

portion capsules, which is suitable for the coffee machine. In particular, individualizing means that those portion capsules that are not appropriate for the coffee machine cannot be inserted into and/or directly fall through the holder, which is designed for the portion capsules in the coffee machine, and/or the coffee machine operates only with the corresponding portion capsules. Preferably a sensor/detection

See also EX1001 '722, 1:32-44, 2:13-19
See also EX1001 '829, 1:23-35, 2:3-11; EX1001 '830, 1:23-35; 2:3-11; EX1001 '910, 1: 22-34, 2:2-8

Pet. '722, 13-14; Pet. '829, 14-15; Pet. '830, 13-15; Pet. '910, 12-13

Disputed Disclosures in the Prior Art

Limitation	IPR2024-00257 ('722)	IPR2024-00254 ('829)	IPR2024-00304 ('830)	IPR2024-00200 ('910)	Prior Art	Previously Presented
Free of a Filter	●	●	●	●	Yoakim	✓
Activating Pump/Pump Control	●	●	●	●	Yoakim and Rossi	✓
Identifier Under the Flange	●	●	●	●	Jarisch (929)	✓
Groove That is Laterally Offset		●			Yoakim	✓
Grooves/Ribs	●		●	●	Rapparini	✓
Ledge			●		Yoakim	✓

Disputed Disclosures in the Prior Art

Limitation	IPR2024-00257 ('722)	IPR2024-00254 ('829)	IPR2024-00304 ('830)	IPR2024-00200 ('910)	Prior Art	Previously Presented
Side Wall Identifier	●			●	Jarisch (929)	_
Encoded Info Used to Activate Pump				●	Yoakim, Jarisch (929) and Rossi	_
Hot Water				●	Yoakim, Jarisch (929), Rossi	_
Electrically Conductive Identifier				●	Yoakim, Jarisch (929)	_
Identifier with Concavity/Convexity				●	Jarisch (929)	_
Grooves Between Flange and Closed Bottom				●	Rapparini	_

Disputed Motivation to Combine and Expectations of Success

Issues	IPR2024-00257 ('722)	IPR2024-00254 ('829)	IPR2024-00304 ('830)	IPR2024-00200 ('910)	Previously Presented
Yoakim and Jarisch (929)	●	●	●	●	
Motivation to place Jarisch (929)'s code on the bottom of Yoakim's flange	●	●	●	●	✓
Expectation of success in combination	●	●	●	●	✓
Jarisch(929)'s enablement of a readable identifier on the bottom of the flange	●	●	●	●	–
Petitioner's RPI's prior prosecution statements	●	●	●	●	✓
Yoakim, Jarisch(929), and Rossi	●	●	●	●	✓
Yoakim, Jarisch(929), Rossi, and Castellani	●	●			✓
Yoakim, Jarisch(929), and Rapparini	●		●	●	✓

An Exemplary Challenged Claim

The invention claimed is:

1. A beverage system for making a beverage, comprising:

A) a portion capsule comprising:

i) a base element with a cavity, in which a beverage material is provided, the base element being symmetrical about a central longitudinal axis thereof and having an open end and a bottom portion, the base element having a first height that is defined between the open end and the bottom portion;

ii) a rim extending outwardly from the base element, the rim comprising a top side and an opposing bottom side;

iii) a cover fastened to the base element to close the cavity, the cover is bowed outwardly in a central region of the cover relative to a peripheral region of the cover, the cover includes a region configured to be pierced at a location that is offset from the central longitudinal axis, the cover has a second height that is defined between the peripheral region and the central region, wherein the first height of the base element is greater than the second height of the cover;

iv) a barrier layer to prevent moisture or aroma from escaping out of the portion capsule; and

v) an identifier provided on the bottom side of the rim;

Taught by Yoakim

Taught by Jarisch

B) a beverage machine comprising:

i) a sensor/detector;

ii) an insertion shaft configured to receive the portion capsule and to enable detection of the identifier on the bottom side of the rim by the sensor/detector;

iii) a chamfered mandrel that is configured to pierce the cover at the location that is offset from the central longitudinal axis;

iv) a seal that is configured to bear against a top side of the cover in a region between the peripheral region of the cover and the region of the cover that is pierced by the chamfered mandrel; and

v) a pump controlled to supply hot water into the portion capsule only upon detection of the identifier by the sensor/detector and a determination by the beverage machine that the portion capsule is suitable for use with the beverage machine.

Ex. 1001 '829, claim 1

Taught by Yoakim

Taught by Rossi

Pet. '829, 43-66

Exemplary Challenged Claims

The invention claimed is:

1. A beverage system for making a beverage, comprising:

A) a portion capsule comprising:

i) a base element with a cavity, in which a beverage material is provided, the base element being symmetrical about a central longitudinal axis thereof and having an open end and a bottom portion, the base element having a first height that is defined between the open end and the bottom portion;

ii) a rim extending outwardly from the base element, the rim comprising a top side and an opposing bottom side;

iii) a cover fastened to the base element to close the cavity, the cover is bowed outwardly in a central region of the cover relative to a peripheral region of the cover, the cover includes a region configured to be pierced at a location that is offset from the central longitudinal axis, the cover has a second height that is defined between the peripheral region and the central region, wherein the first height of the base element is greater than the second height of the cover;

iv) a barrier layer to prevent moisture or aroma from escaping out of the portion capsule; and

v) an identifier provided on the bottom side of the rim;

Taught by Yoakim

Taught by Jarisch

B) a beverage machine comprising:

i) a sensor/detector;

ii) an insertion shaft configured to receive the portion capsule and to enable detection of the identifier on the bottom side of the rim by the sensor/detector;

iii) a chamfered mandrel that is configured to pierce the cover at the location that is offset from the central longitudinal axis;

iv) a seal that is configured to bear against a top side of the cover in a region between the peripheral region of the cover and the region of the cover that is pierced by the chamfered mandrel; and

v) a pump controlled to supply hot water into the portion capsule only upon detection of the identifier by the sensor/detector and a determination by the beverage machine that the portion capsule is suitable for use with the beverage machine.

Taught by Yoakim

Taught by Rossi

Ex. 1001 '829, claim 1

10. The beverage system according to claim **7**, wherein the beverage machine comprises a waste container for the portion capsule to fall into.

11. The beverage system according to claim **10**, wherein the beverage machine comprises a pair of holding arms for guiding the portion capsule.

Taught by Castellani

Ex. 1001 '829, claims 10-11

DEMONSTRATIVE – NOT AN EXHIBIT

An Exemplary Challenged Claim

8. A portion capsule for making a beverage comprising:

a base element having a cavity in which a beverage material is provided, the base element including a wall that is symmetrical about a central longitudinal axis thereof and having an open end and a closed bottom portion, the base element has a first height that is defined between the open end and the closed bottom portion, the wall has an outside surface and an inside surface which faces the beverage material;

a plurality of vertically-orientated indentations arranged on the outside surface of the wall;

a plurality of vertically-orientated ribs arranged on the inside surface of the wall;

a rim at the open end of the base element, the rim having a top surface and an opposing bottom surface;

an optically detectable individualization identifier, which is carried by the bottom surface of the rim, the optically detectable individualization identifier includes surface areas having different optically detectable reflective properties, the optically detectable individualization identifier is configured to be read by a sensor/detector of a beverage machine to individualize the portion capsule and to activate a pump of the beverage machine;

a barrier layer to prevent moisture or aroma from escaping out of the portion capsule; and

a cover sealed to the base element to close the cavity, the cover having a central region and a perimeter, the cover is bowed outwardly to a second height in the central region relative to the perimeter of the cover, the second height of the cover is less than the first height of the base element, the cover includes a piercing region that is configured to be pierced by a mandrel of the beverage machine at a location that is laterally offset from the central longitudinal axis and a sealing region that is configured to be sealed against by a seal of the beverage machine, the sealing region is located between the piercing region and the perimeter of the cover.

Ex. 1001 '830, claim 8

Taught by Yoakim

Taught by Rapparini

Taught by Yoakim

Taught by Jarisch

Taught by Yoakim

Taught by Rossi

Taught by Yoakim

Pet. '830, 79-47-69

Capsule Identification Using Barcodes Was Known

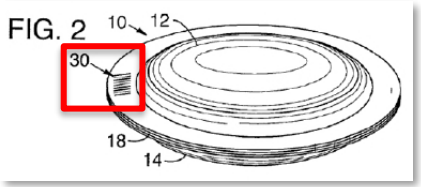

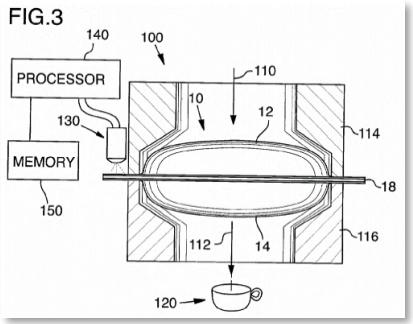

Barcode-Based Capsule Identification
(EX1037, Boyd, FIGs. 2-3)

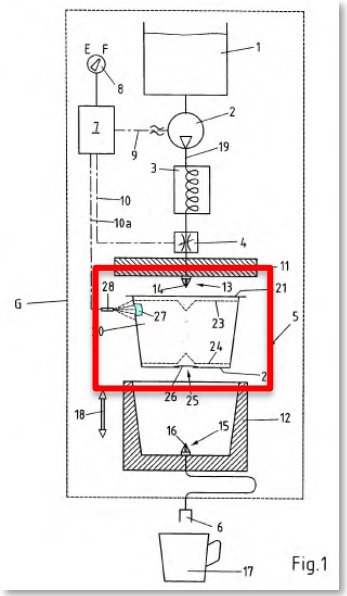

Controlling Extraction Parameters Using a Label or Marking Like a Barcode
(EX1039, Schifferle, FIG. 1)

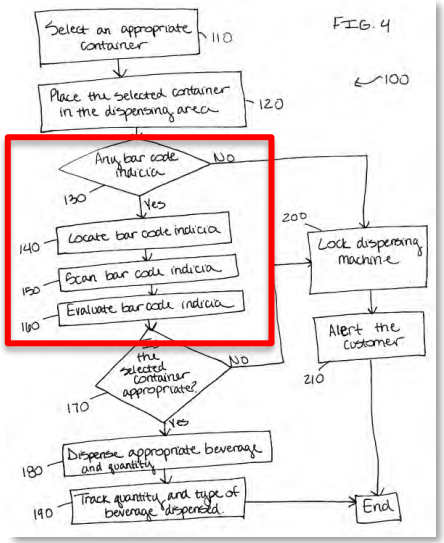

System Based on Barcode Result
(EX1042, Lillard, FIG. 4)

Pet. '722, 7-10; Pet. '829, 8-11; Pet. '830, 8-9, 11; Pet. '919, 6-9

IPR2024-00299
Nespresso USA, Inc. Ex. 1075
Page 11 of 265
11 | DEMONSTRATIVE – NOT AN EXHIBIT

Pump Control in Single-Serve Beverage Machines Was Known

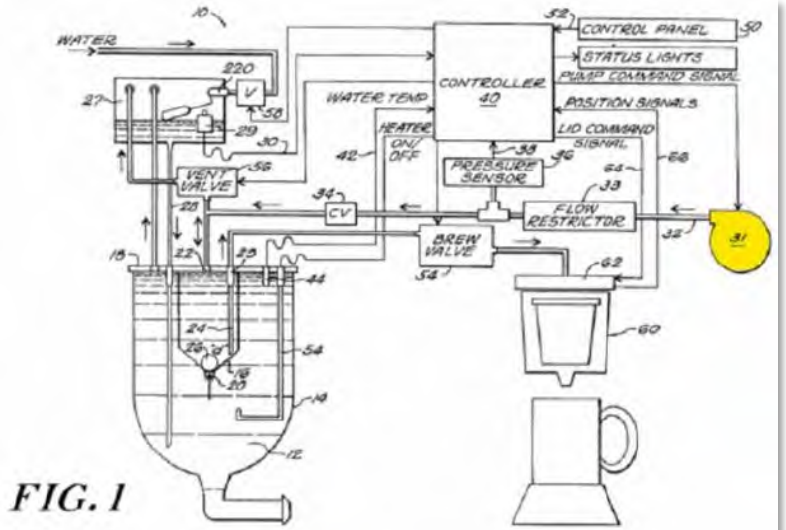

FIG. 1

Ex. 1019, Beaulieu at FIG. 1.

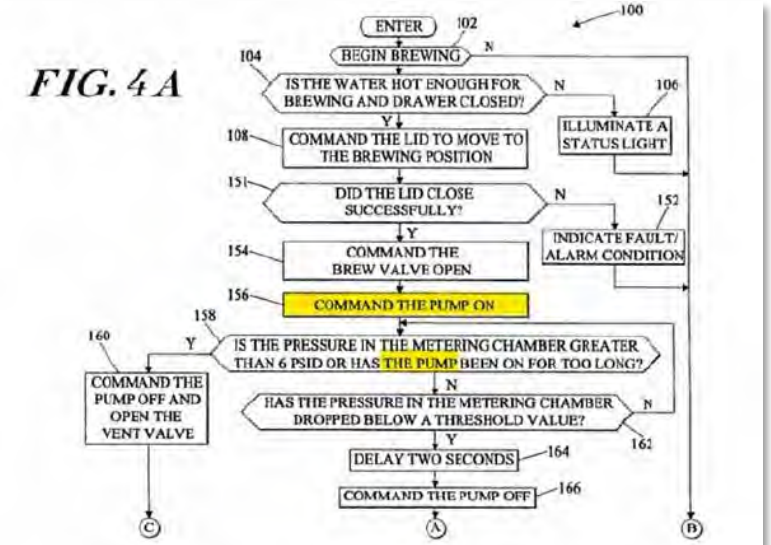

FIG. 4A

Ex. 1019, Beaulieu at FIG. 4A.

Pumps in Single-Serve Machines
(EX1019, Beaulieu, Figures 1, 4A)

Pet. '722, 3; Pet. '920, 3; Pet. '810, 3; Pet. '750, 3

Holding Arms and Drop Boxes Were Known

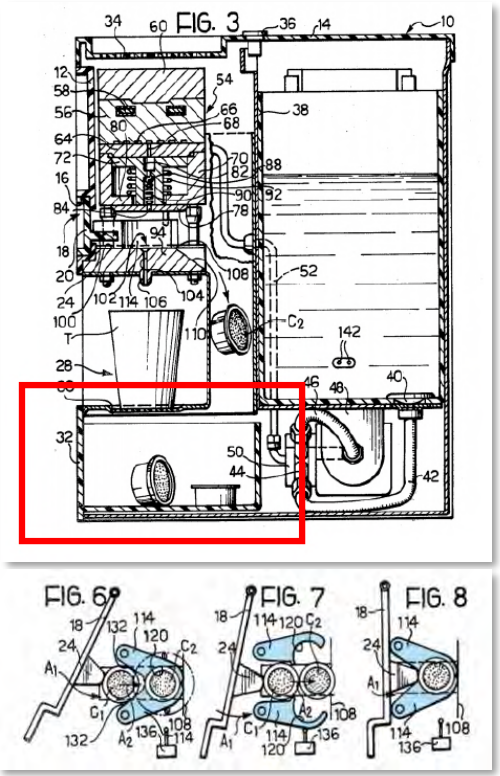

(EX1020, Piana, FIGs. 3, 6-8)

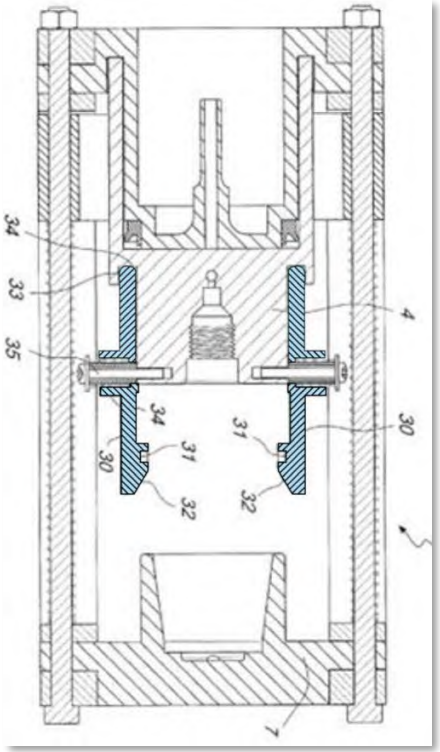

(EX1023, Cheng, FIG. 7)

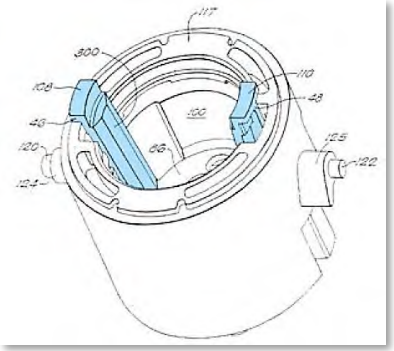

(EX1021, Lazaris, FIG. 5)

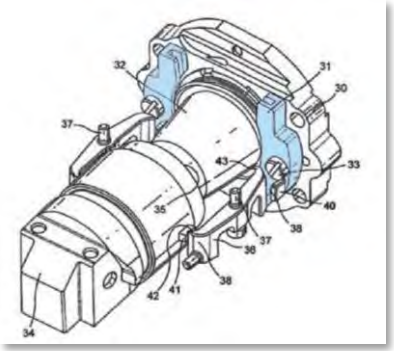

(EX1022, Ryser, FIG. 8)

Pet. '722, 3; Pet. '829, 3 (all citing EX1003, ¶ 64-71)

Ribs and Grooves Were Known

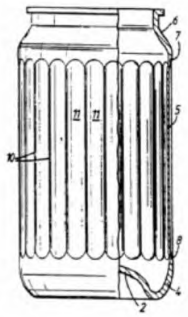

(EX1031, Claydon, FIG. 3)

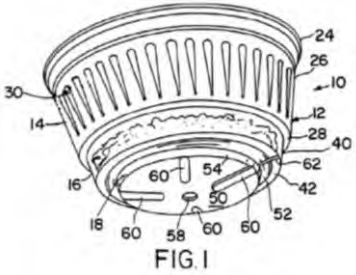

(EX1032, Erickson, FIG. 1)

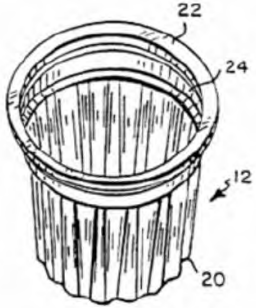

(EX1033, Sweeney, FIG. 2)

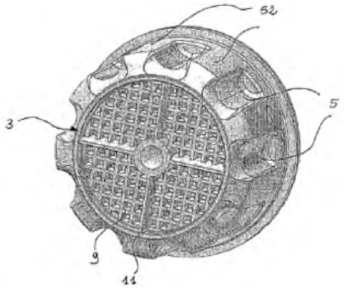

(EX1034, Rubino, FIG. 2)

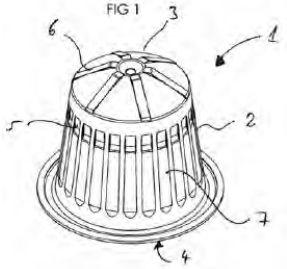

(EX1035, Mariller, FIG. 1)

Pet. ’722, 4-7; Pet. ’829, 3-7; Pet. ’830, 5-7; Pet. ’910, 4-6 (all citing EX1003, ¶ 7.88-93)

Institution Grounds

- **IPR2024-00257 ('722 Patent)**
  - Claims 1 and 4-24 under 35 U.S.C. §103 as unpatentable over Yoakim, Jarisch 929, Rapparini, and Rossi.
  - Claims 2-3 under 35 U.S.C. §103 as unpatentable over Yoakim, Jarisch 929, Rapparini, Rossi, and Castellani.
- **IPR2024-00254 ('829 Patent)**
  - Claims 1-9 and 12-18 under 35 U.S.C. §103 as unpatentable over Yoakim, Jarisch, and Rossi.
  - Claims 10-11 and 19 under 35 U.S.C. §103 as unpatentable over Yoakim, Jarisch, Rossi, and Castellani.
- **IPR2024-00304 ('830 Patent)**
  - Claims 1-2 and 4-7 under 35 U.S.C. §103 as unpatentable over Yoakim, Jarisch, and Rossi.
  - Claims 3 and 8-12 under 35 U.S.C. §103 as unpatentable over Yoakim, Jarisch, Rossi, and Rapparini.
- **IPR2024-00299 ('910 Patent)**
  - Claims 1-8 under 35 U.S.C. §103 as unpatentable over Yoakim, Jarisch 929, Rapparini, and Rossi.

Pet. '722, 22; Pet. '829, 21-22; Pet. '830, 23; Pet. '910, 21.

IPR2024-00299
Nespresso USA, Inc. Ex. 1075
Page 15 of 265

All References in the Grounds are Prior art

1. K-fee has the burden of proof on an effective filing date earlier than the PCT;
2. K-fee did not attempt to show priority to the earlier German applications; and
3. The Federal Circuit has held that 102(e) art is a "printed publication" under the IPR statute (*Lynk Labs, Inc. v. Samsung Electronics Co.*, 125 F.4th 1120 (Fed. Cir. 2025) (precedential)).

Reply to POR '722, 1; Reply to POR '829, 1; Reply to POR '830, 1; Reply to POR '910, 1.

A POSITA Would Have Been Motivated to Combine the Cited Art

DEMONSTRATIVE – NOT AN EXHIBIT

A POSITA Would Have Combined Yoakim with Jarisch/Jarisch 929

’722, ’829, ’830, and ’910 Patents

DEMONSTRATIVE – NOT AN EXHIBIT

Motivation to Combine Yoakim and Jarisch (929)

227. Additionally, a person of ordinary skill in the art would have had an expectation of success in this combination of Yoakim and Jarisch 929. As explained above in this section, Yoakim and Jarisch are both directed to centrifugal brewing systems with similar components and configuration. Jarisch 929 further teaches how to modify a centrifugal brewing chamber, such as the one in Yoakim, to read a code located on the bottom side of a capsule flange, away from the capsule membrane. Specifically, Jarisch 929 teaches placing the light source at the bottom of the capsule support chamber (called the centrifugal cell 3), and configuring the capsule support chamber to be of a light conductive material such that a light source will pass through the support chamber and reach the bottom of the capsule flange. (Ex. 1006 at [0090]-[0106].) Jarisch 929 also discloses using mirrors as needed in order to position the

EX1003 '910, ¶227
See also EX1003 '722, ¶217; EX1003 '829, ¶203; EX1003 '830, ¶210

Yoakim

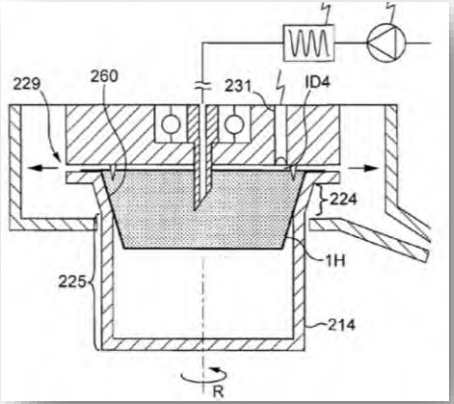

EX1004, Fig. 61

Jarisch(929)

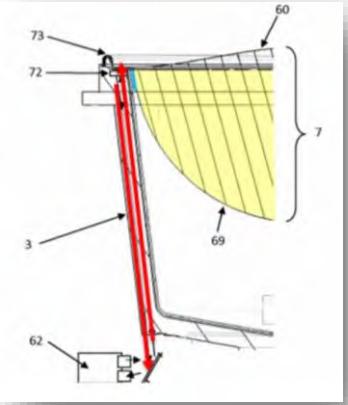

EX1005, Fig. 4 (annotated)
See also EX1006, Fig. 5

'722	'829
'830	'910

Pet. '722, 38; Pet. '829, 39-40; Pet. '830, 42-45; Pet. '910, 39.

Yoakim and Jarisch(929) Share an Applicant and an Inventor

(19) **United States**
(12) **Patent Application Publication**
Yoakim et al.
(10) **Pub. No.: US 2010/0239734 A1**
(43) **Pub. Date: Sep. 23, 2010**

(54) **METHOD FOR PREPARING A BEVERAGE OR FOOD LIQUID AND SYSTEM USING BREWING CENTRIFUGAL FORCE**

(76) Inventors: **Alfred Yoakim**, St. Legier la Chiesaz (CH); **Jean-Paul Denisart**, La Conversion (CH); **Antoine Ryser**, Lausanne (CH); **Alexandre Perentes**, Lausanne (CH)

Correspondence Address:
WINSTON & STRAWN LLP
PATENT DEPARTMENT
1700 K STREET, N.W.
WASHINGTON, DC 20006 (US)

(21) Appl. No.: **12/776,155**

tion-in-part of application No. 12/602,730, filed on Dec. 2, 2009, filed as application No. PCT/EP2008/054810 on Apr. 21, 2008.

(30) **Foreign Application Priority Data**

Jun. 5, 2007	(EP)	EP07109579.8
Jun. 5, 2007	(EP)	EP07109580.6
Feb. 29, 2008	(EP)	EP08102147.9
Feb. 29, 2008	(EP)	EP08102148.7
Feb. 29, 2008	(EP)	EP08102149.5
Aug. 28, 2009	(EP)	EP09168885.3
Apr. 19, 2010	(EP)	EP10160249.8

Publication Classification

(51) **Int. Cl.**
A47J 31/44 (2006.01)
A47J 31/00 (2006.01)

Ex. 1004, cover

(73) Assignee: **Nestec S.A.**, Vevey (CH)
(*) Notice: Subject to any disclaimer, the term of this patent is extended or adjusted under 35 U.S.C. 154(b) by 147 days.
(21) Appl. No.: **12/776,155**
(22) Filed: **May 7, 2010**
(65) **Prior Publication Data**
US 2010/0239734 A1 Sep. 23, 2010

(19) **United States**
(12) **Patent Application Publication**
Jarisch et al.
(10) **Pub. No.: US 2013/0064937 A1**
(43) **Pub. Date: Mar. 14, 2013**

(54) **CAPSULE, SYSTEM AND METHOD FOR PREPARING A BEVERAGE BY CENTRIFUGATION**

(75) Inventors: **Christian Jarisch**, Lutry (CH); **Alexandre Perentes**, Lausanne (CH); **Stefan Kaeser**, Aarau (CH); **Carlo Magri**, Monthey (CH); **Arnaud Gerbaulet**, Oye et Pallet (FR); **Thomas Kaeser**, Brent (CH); **Daniel Abegglen**, Rances (CH)

(73) Assignee: **NESTEC S.A.**, Vevey (CH)

(21) Appl. No.: **13/697,297**

(22) PCT Filed: **May 12, 2011**

(30) **Foreign Application Priority Data**

May 12, 2010	(EP)	10162741.2
Jul. 13, 2010	(EP)	10169374.5

Publication Classification

(51) **Int. Cl.**
B65D 85/816 (2006.01)
A47J 31/44 (2006.01)

(52) **U.S. Cl.**
USPC **426/112**; 426/425; 99/285

(57) **ABSTRACT**

Capsule for the preparation of a beverage comprising a con-

Ex. 1005, cover

(19) **United States**
(12) **Patent Application Publication**
Jarisch et al.
(10) **Pub. No.: US 2013/0064929 A1**
(43) **Pub. Date: Mar. 14, 2013**

(54) **SUPPORT AND CAPSULE FOR PREPARING A BEVERAGE BY CENTRIFUGATION, SYSTEM AND METHOD FOR PREPARING A BEVERAGE BY CENTRIFUGATION**

(75) Inventors: **Christian Jarisch**, Lutry (CH); **Alexandre Perentes**, Lausanne (CH); **Stefan Kaeser**, Aarau (CH); **Carlo Magri**, Monthey (CH); **Arnaud Gerbaulet**, Oye et Pallet (FR); **Thomas Kaeser**, Brent (CH); **Daniel Abegglen**, Rances (CH)

(73) Assignee: **NESTEC S.A.**, Vevey (CH)

(30) **Foreign Application Priority Data**

May 12, 2010	(EP)	10162741.2
Jul. 13, 2010	(EP)	10169374.5

Publication Classification

(51) **Int. Cl.**
A47J 31/44 (2006.01)
A23L 2/38 (2006.01)
G06K 19/00 (2006.01)
B65D 85/804 (2006.01)

(52) **U.S. Cl.**
CPC ***A47J 31/4492*** (2013.01); ***B65D 85/8043*** (2013.01); ***A23L 2/38*** (2013.01); ***G06K 19/00*** (2013.01)
USPC **426/87**; 99/295; 426/232; 235/494

(57) **ABSTRACT**

Ex. 1006, cover

'722	'829
'830	'910

Pet. '722, 36; Pet. '829, 37; Pet. '830, 41; Pet. '910, 37.

Jarisch(929)'s System is Intended to Modify Centrifugal Brewing Systems like Yoakim's

[0034] FIG. **1** illustrates an example of a beverage preparation system **1** as described in WO2010/026053 for which the capsule of the invention can be used.

EX1005, [0034]
See also EX1006, [0047]

Denisart (WO2010/026053)

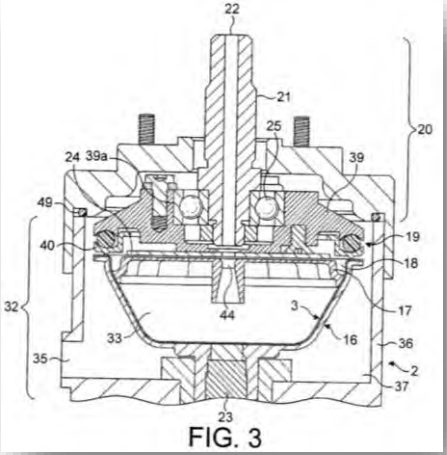

FIG. 3

EX1007, Fig. 3

Yoakim

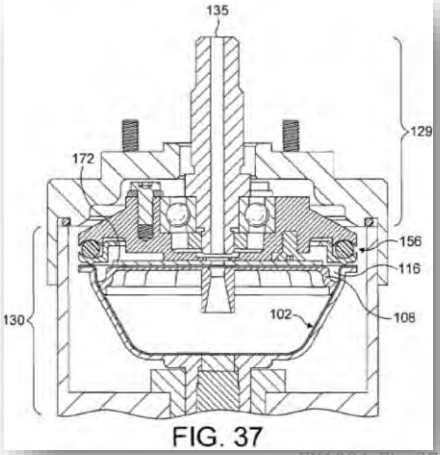

FIG. 37

EX1004, Fig. 37

'722	'829
'830	'910

Pet. '722, 36; Pet. '829, 37; Pet. '830, 14; Pet. '910, 37-38.

Yoakim' Uses Optical Codes to Identify Capsules and Optimize Brewing Parameters

[0477] The capsule system further comprises an identification means associated to the different capsules in the set for identifying each capsule and adjusting brewing parameters accordingly. The adjustable parameters can be the rotational speed, the back-pressure at the outlet of the capsule, and/or the volume of liquid fed in the capsule. The identification means participates to deliver a wider range of beverages having differentiated characteristics (volume, taste, strength, crema, colour, etc.). The identification means are associated to control means placed in the centrifugal brewing device which controls the adjustment of the said parameters, by controlling the rotational motor driving the capsule holder or/and the pump supplying liquid in the capsule.

[0525] In an alternative illustrated in FIGS. **61** and **62**, the identification means are directly associated to the different capsules. In this case, the identification means ID**4**, ID**5** are capsule recognition means attached to or embedded in the capsules. The recognition means can be any mechanical, optical, magnetic or radio-frequency recognition means capable of delivering information to the brewing device, via a sensing device **231**, as to which type of capsule is inserted in the device. For example, the recognition means is a barcode, a colour code, a RFID tag, a magnetically sensitive element, or a mechanical key or shape.

EX1004, [0477], [0525]

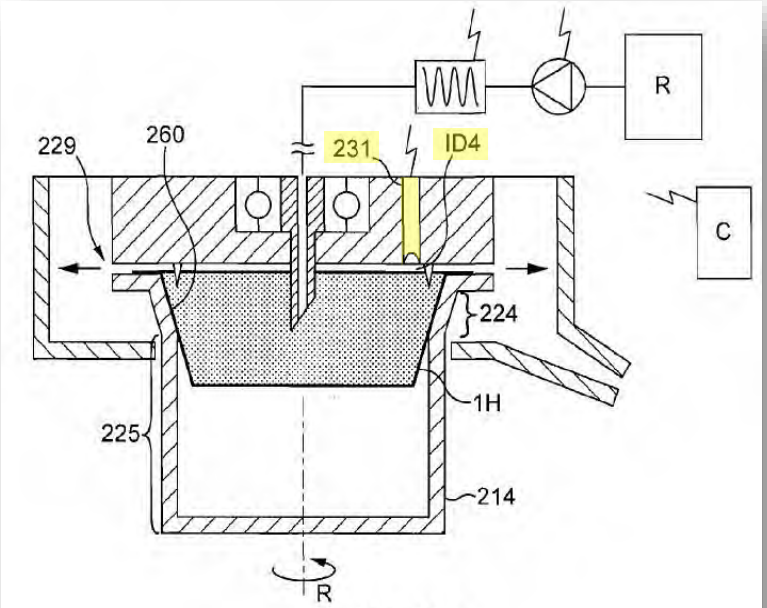

FIG. 61

EX1004, Fig.61

'722	'829
'830	'910

Pet. '722, 23, 37; Pet. '829, 23, 38; Pet. '830, 24, 42; Pet. '910, 22, 38.

Yoakim Benefits from Jarisch's Code Placement

[0022] In another embodiment, the code is present on the rim of the capsule. In the most preferred embodiment, the code is present on the bottom of the rim of the capsule which is opposed to the lid of the capsule. The bottom of the rim is sufficiently away from the liquid injection and beverage delivery areas so that there is a lower risk for the code to become unreadable such if partly or totally hidden or soiled by beverage residues or otherwise (e.g., coffee particles). As

EX1005, [0022]

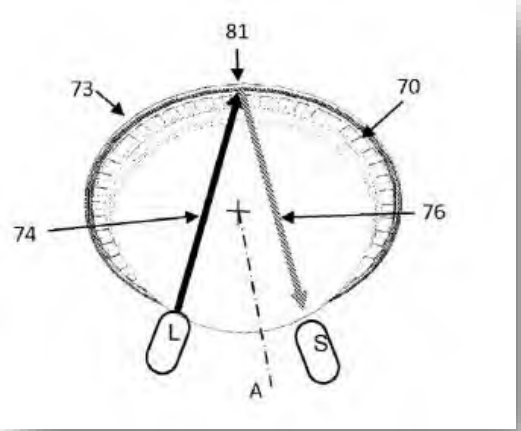

EX1005, Fig. 5

'829

'830

IPR2024-00299
Nespresso USA, Inc. Ex. 1075
Page 23 of 265

Jarisch 929 Teaches the Same Beneficial Code Placement

[0063] In an embodiment, the support can be a part of the capsule itself. In particular, the support may be spread along the circumference or a part of the circumference of the capsule. The support can be further located close to the peripheral edge of the capsule, the peripheral edge being defined as the outermost circular line of the capsule. These locations are particularly advantageous since they offer both a large area for the symbols to be disposed and is less prone to damages caused by the processing module and in particular by the pyramidal plate, and to ingredients projections. As a consequence, the amount of coded information and the reliability of the readings are both improved.

[0064] The support can be part of, or be formed directly on, the body of the capsule. The support can also be disposed on the bottom side of the rim of the capsule. Typically, the

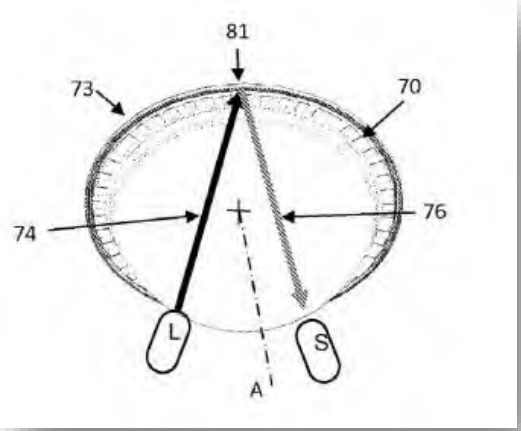

EX1006, Fig. 4

'722

'910

EX1006, [0063]-[0064]

Pet. '722, 23-24, 37, 47-48, Pet. '910, 22-23, 38.

Jobin Agrees That Moving the Code Location Is Beneficial

116. Due to the messy nature of the liquid and coffee grounds present during extraction process, it was also known that optical codes must be placed in a location away from the liquid injection and piercing site. This is because hot water, steam, and coffee grounds from piercing or prior extractions can soil the optical reader or code, rendering reading of the code unreliable.

EX1003 ¶116 (same for all IPRs)

’722	’829
’830	’910

Pet. ’722, 12; Pet. ’829, 13; Pet. ’830, 12-13; Pet. ’910, 11.

Glucksman Admits Residue Build-Up

Q And if you don't clean the machines, like, a residue can build up inside the chamber; is that right?

A Stands to reason.

EX1071, 92:17-20

Q And what do you understand that residue to be made of?

A Essentially, dried organic acids or oils.

EX1071, 92:21-93:2

’722	’829
’830	’910

Reply to POR ’722, 12; Reply to POR ’829, 12; Reply to POR ’830, 12; Reply to POR ’910, 11.

The Piercing Location Would Impact Code Reading

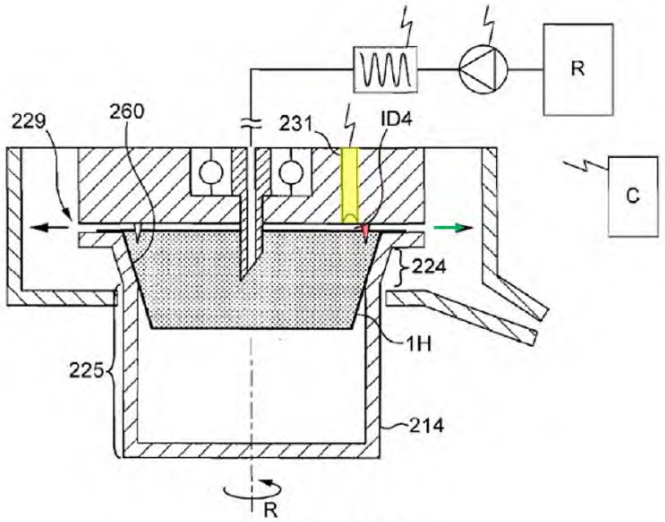

FIG. 61

EX1004, Fig. 61 (annotated)

201. A person of ordinary skill in the art would have been motivated to use the placement of the optical code and reader from Jarisch in the Yoakim system. A person of ordinary skill in the art would have understood that Jarisch provides an advantageous location to place an optical code in a centrifugal brewing system, such that the code is facing away from the membrane of the capsule and away from areas of the brewing chamber that contain piercing elements, liquid and coffee grounds. For example, Jarisch explains that placing the code on the bottom of the rim of the capsule is particularly advantageous since "there is a lower risk for the code to become unreadable such if partly or totally hidden or soiled by beverage residues or otherwise (e.g., coffee particles)," and, "[a]s a result, the reading is made more reliable." (Ex. 1005 at [0022].)

EX1003 '829, ¶201

See also EX1003 '722, ¶214; EX1003 '830, ¶208; EX1003 '910, ¶224

Reply to POR '722, 13; Reply to POR '829, 13; Reply to POR '830, 13; Reply to POR '910, 12.

'722	'829
'830	'910

Piercing Problems Known in the Prior Art

recognition means of the machine as described below. This is believed to be for two reasons. Firstly, the separation results in any distortion of the inlet area of the laminate on piercing of the laminate 5 having a minimal affect on the laminate in the region of the barcode 320. Secondly, it has

EX1010, 19:25-29

Panesar confirms there is a known problem

’722	’829
’830	’910

Pet. ’722, 12; Pet. ’829, 13; Pet. ’830, 15; Pet. ’910, 11.

Centrifugal Brewing: K-fee Ignores the Effect of Yoakim's Flow Restriction on Fluid Movement in the Brewing Chamber

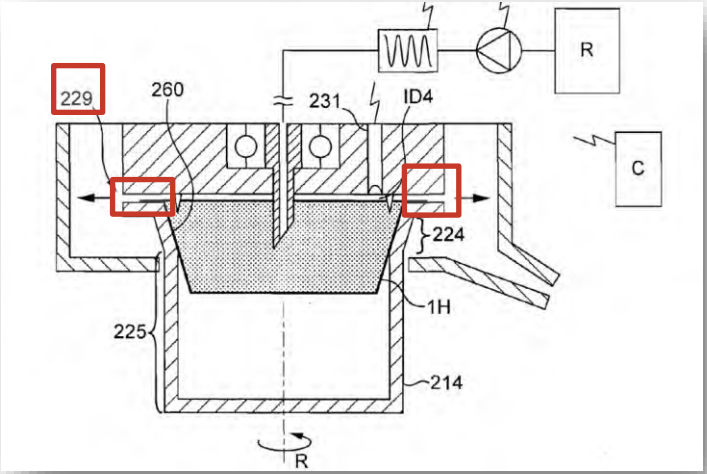

injection hole if the upper wall is also permeable. Preferably, the outlet **229** forms a flow restriction provided in the flow path of the beverage to provide a gradient of pressure in the capsule. Such restriction can be obtained by small orifices or a restriction valve such as described in above.

EX1004, Fig. 61 (annotated), [0507] (annotated)

Glucksman confirmed:

Q But the valve is outside of the -- the valve is not underneath the membrane inside the capsule, right?

A No. The valve is -- the valve is positioned against the rim of the capsule.

Q Okay. So the liquid that would be pressing against the valve to open it must be outside of the membrane, right?

A Correct.

Q Okay.

A I agree.

EX1071, 123:10-20

'722	'829
'830	'910

Reply to POR '722, 13; Reply to POR '829, 13; Reply to POR '830, 13; Reply to POR '910, 12.

Motivation to Combine – K-fee's POR Inconsistencies

Moreover, as illustrated below the barcode (ID4 below the yellow region) is inboard of the tapered outlet perforators 221 (annotated in red) so the centrifugal forces when the capsule is spinning would drive any fluid through the outlets and away (annotated in green) from the barcode—not towards it. *See id.*, Figs. 61, 62,

POR '829, 23
See also POR '722, 24; POR '830, 26; POR '910, 26

A POSITA would also have understood that Figs. 61 and 62 are not drawn to scale, such that the ID4 would not be immediately adjacent to the piercing member. Ex.2025, 169:4-11.

POR '829, 23
See also POR '722, 24; POR '830, 26; POR '910, 26

'722	'829
'830	'910

Reply to POR '722, 13; Reply to POR '829, 13; Reply to POR '830, 13; Reply to POR '910, 12.

K-fee's Theories Have No Support

K-fee provides no evidence to support this claim

piercing member. Moreover, given the depth of piercing expected at the water inlet, the support materials for the membrane, and the volume of substance, a POSITA would not expect soiling from the inlet of the capsule due to the pierced membrane forming a seal around the piercing inlet because the gap formed between the pierced membrane and the piercing member will not be large enough to allow the coffee granules/beverage material inside the capsule to escape outside the capsule. Ex. 1004 at [0128]. Moreover, Yoakim teaches it is preferrable to have

EX2020 '910, ¶105
EX2020 '722, ¶122; EX2020 '829, ¶98; EX 2020 '830, ¶111.

[0128] The capsule can comprise a sealing lid. The sealing lid can comprise a flexible membrane. The membrane can comprise gas barrier and support layers made of polymers, aluminium and/or aluminium alloys.

EX1004, [0128]

Jobin confirmed:

Q. And when the central injection needle pierces through the membrane, how tight of a fit would that be?

A. That's not described in Yoakim. It's based on the characteristics of the needle and the membrane itself.

EX2025, 170:5-11

'722	'829
'830	'910

Reply to POR '722, 12-13; Reply to POR '829, 12; Reply to POR '830, 12; Reply to POR '910, 11.

Code Spacing: There is No Incompatibility between Jarisch/Jarisch 929's and Yoakim's Preferred Rim Diameters

Yoakim

[0414] As shown in FIGS. **26** and **27**, a preferred capsule **101** of the invention generally comprises a dished body **102** onto which is sealed a sealing foil **103**. The sealing foil **103** is sealed onto a peripheral rim **104** of the body at a sealing annular portion **105**. The rim **104** can extend outwards forming a small annular portion, e.g., of about 2-5 mm. The dished

EX1004, [0414]

Jarisch

to the peripheral edge of the capsule. The peripheral edge is defined as the outermost circular line of the capsule. Preferably, the distance of the code from the peripheral edge is not more than 10 mm, more preferably not more than 8 mm.

EX1005, [0037]

Jarisch 929

further located close to the peripheral edge of the capsule. The peripheral edge is defined as the outermost circular line of the capsule. Preferably, the distance of the code from the peripheral edge is not more than 10 mm, more preferably not more than 8 mm.

EX1006, [0066]

It is well within a POSITA's skill set to configure the correct rim size for the combination

'722	'829
'830	'910

Reply to POR '722, 14; Reply to POR '829, 13-14; Reply to POR '830, 13-14; Reply to POR '910, 13.

K-fee Forces Bodily Information

’829 Patent Institution Decision:

spins or that Yoakim’s rim is not sufficiently sized for Jarisch’s code. These arguments are based on bodily incorporating features from Jarisch, rather than considering how a person having ordinary skill in the art would understand the teachings. *See In re Keller*, 642 F.2d 413, 425 (CCPA 1981) (“[The] test for obviousness,” however, “is not whether the features of a secondary reference may be bodily incorporated into the structure of the primary reference. . . . Rather, the test is what the combined teachings of the references would have suggested to those of ordinary skill in the art.”).

ID ’829, 26
See also ID ’722, 27-28; ID ’830, 26; ID ’910, 29

’722	’829
’830	’910

Reply to POR ’722, 12; Reply to POR ’829, 12; Reply to POR ’830, 12; Reply to POR ’910, 11.

No Substantial Reconstruction is Needed

Jarisch teaches exactly how to move a code in a centrifugal system like Yoakim's to the bottom of the flange and read it

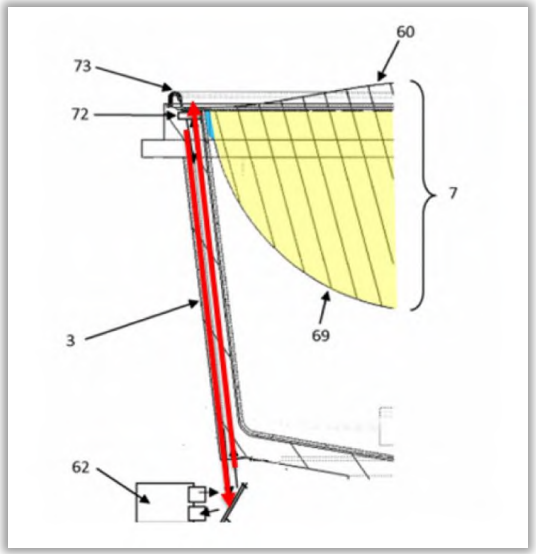

EX1005, Fig. 4 (annotated)

[0082] In the embodiment of the FIG. **4**, the light source is placed at the bottom of the centrifugal cell **3**. This cell is light conductive allowing the beam to reach the bottom side **72** of its rim **73**. The reflected light is conducted by the transparent (or light conductive) centrifugal cell **3** to reach the sensor **62**. In case that the sensor **62** cannot be aligned with the transparent part of the centrifugal cell **3**, a mirror can be placed as illustrated in the FIG. **4** to deflect the forward and backward beams.

EX1005, [0082]

'829

'830

Pet. '829, 39-40; Pet. '830, 42-43.

No Substantial Reconstruction is Needed

Jarisch 929 also teaches how to move a code in a centrifugal system like Yoakim's to the bottom of the flange and read it

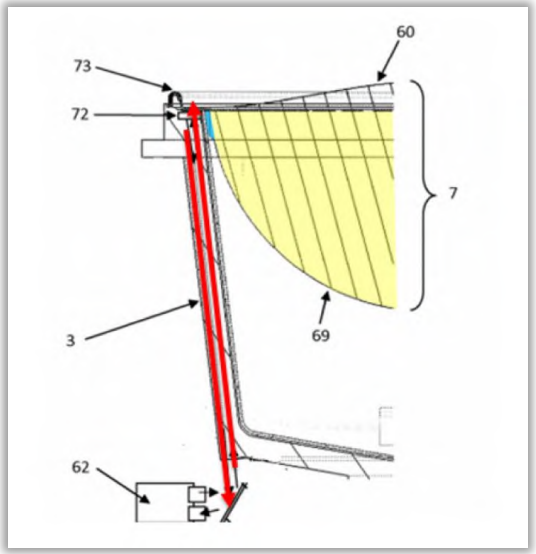

EX1006, Fig. 5 (annotated)

[0106] In the embodiment of the FIG. **5**, the light source is placed at the bottom of the centrifugal cell **3**. This cell is light conductive allowing the beam to reach the bottom side **72** of its rim **73**. The reflected light is conducted by the transparent (or light conductive) centrifugal cell **3** to reach the sensor **62**. In case that the sensor **62** cannot be aligned with the transparent part of the centrifugal cell **3**, a mirror can be placed as illustrated in the FIG. **5** to deflect the forward and backward beams.

EX1006, [0106]

'722

'910

K-fee's Substantial Reconstruction and Redesign Arguments Fail

Jobin:

Specifically, Jarisch teaches placing the light source at the bottom of the capsule support chamber (called the centrifugal cell 3), and configuring the capsule support chamber to be of a light conductive material such that a light source will pass through the support chamber and reach the bottom of the capsule flange. (Ex. 1005 at [0082]-[0084].) Jarisch also discloses using mirrors as needed in order to position the optical light source and sensor in a suitable location and orientation. The Jarisch optical reader (62) configuration is shown here with the light path (red) from detector (62) to capsule rim (73). A person of skill in the art would appreciate a similar modification to Yoakim FIG. 61 would be possible based on this disclosure:

EX1003 '829, ¶203
See also EX1003 '722, ¶217; EX1003 '830, ¶210; EX1003 '910, ¶227.

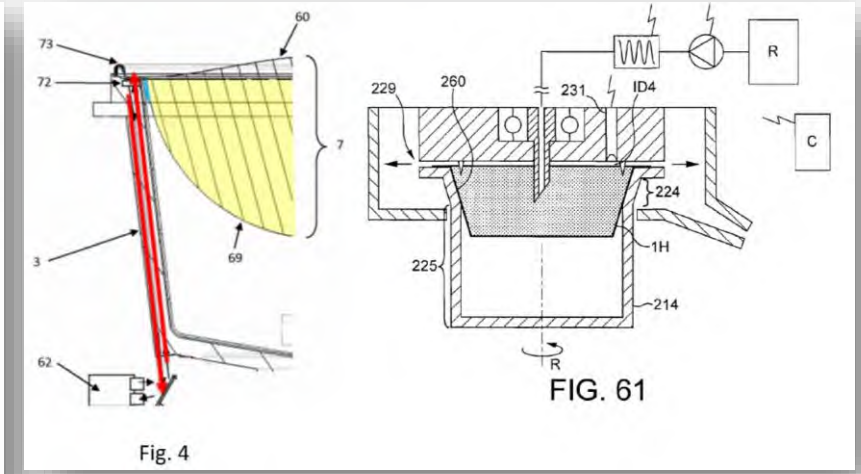

EX1005, Fig. 4 ; EX1004, Fig.61

'722	'829
'830	'910

Pet. '722, 38-39; Pet. '829, 39-40; Pet. '830, 38-39; Pet. '910, 39-40.

Jarisch Is Consistent with a Snug Fit

Like Yoakim, Jarisch teaches holding and driving the capsule in rotation:

[0023] The invention further relates to a system for preparing a beverage from a capsule as aforementioned and further comprising a beverage preparation device; wherein the device comprises capsule holding means for holding the capsule and rotational drive means for driving the holding means and capsule in rotation along said axis of rotation and reading means arranged for reading the code when the capsule is rotated along said axis.

EX1005, [0023]

’829

’830

Reply to POR 829, 14-15, Reply to POR ‘830, 14-15.

Jarisch 929 is Consistent with a Snug Fit

Jarisch 929 also teaches holding and driving the capsule in rotation:

[0038] According to a third aspect, the invention relates to a system for preparing a beverage from a capsule according to the second aspect or a combination of a capsule and a support according to the first aspect, and further comprising a beverage preparation device. The device comprises capsule holding means for holding the capsule and rotational drive means for driving the holding means and capsule in rotation along said axis of rotation and reading means arranged for reading the sequences of symbols in the section when the capsule is rotated along said axis. The reading means may comprise a light emitter and a light sensor or an inductive sensor. The optical reading means or inductive sensor may be arranged to read the sequences on the rim of the capsule.

EX1006, [0038]

'722

'910

Reply to PR '722, 13-16, Reply to PR '910, 14.

There is No Gap in Jarisch

Jobin Agrees Jarisch Engages the Capsule

Q. Does the cell three go all the way up to 72 or is there a gap from where the cell stops?

A. My understanding is that the capsule is placed on the capsule support and it's supported by the rim as it's in the capsule support. So it's not a gap that I can understand to be there.

- - -

A. I don't understand it to be a gap. I understand that the rim is on the support.

EX2025, 142:7-21

’722	’829
’830	’910

Pet.’722, 15-16; Pet. ’829, 14-15; Pet. ’830, 14-15; Pet. ’910, 14.

Jarisch Does Not Teach a Gap

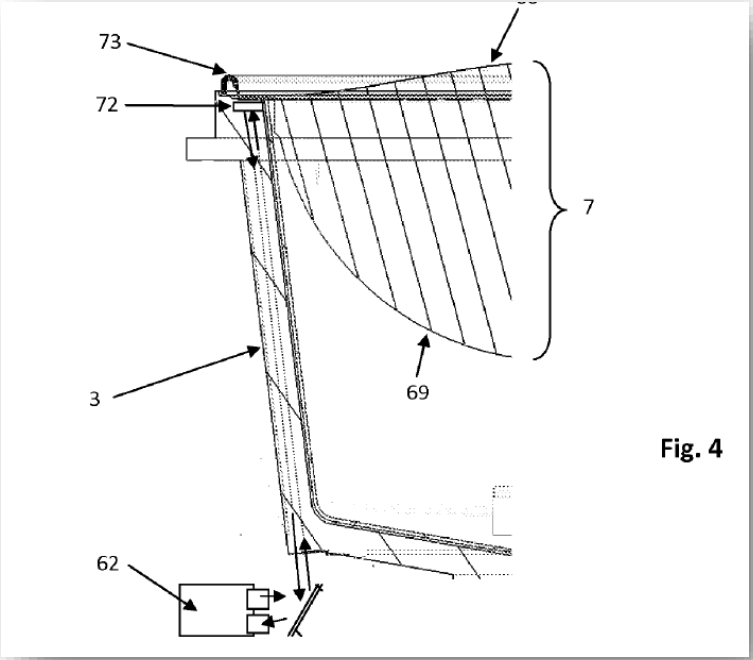

Fig. 4

EX1005, Fig. 4

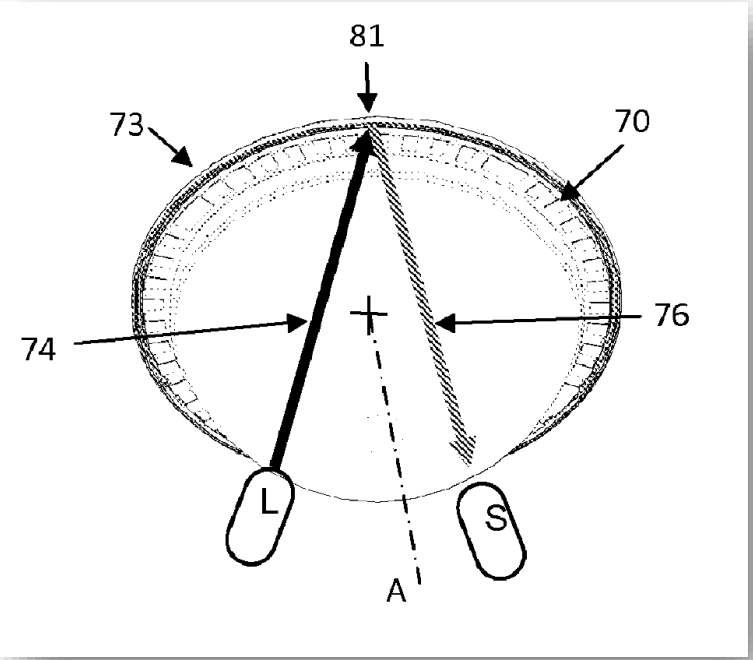

EX1005, Fig. 5

’722	’829
’830	’910

Reply to POR ’722, 15-16; Reply to POR ’829, 14-15; Reply to POR ’830, 14-15; Reply to POR ’910, 14.

A POSITA Knows How to Design a System Where the Capsule Fits

Q. Does -- fitting into the brewing system, is that one of the factors that would be considered?

ATTORNEY MCCRAW: Object to form. Objection. Relevance.

THE WITNESS: Well, what I can state is that one of ordinary skill would -- if one were designing a brewing system that included a single-use capsule, they would necessarily need to ensure that the capsule fit the brewing chamber.

That would be a design consideration that they would take into account.

EX2011, 36:18-37:6

’722	’829
’830	’910

Reply to POR ’722, 15-16; Reply to POR ’829, 14-15; Reply to POR ’830, 14-15; Reply to POR ’910, 14.

Gluckman's Theories Are Inconsistent with K-fee's Patents

19. Finally, none of the "problems" Mr. Glucksman identifies to allege that there was no reasonable expectation of success in combining the Yoakim and Jarisch references—namely, vibrations, mass balancing of the centrifugation system, distinguishing between light-reflecting and light-absorbing signals, mirroring and index-of-refraction matching, complexity of an optics assembly (Ex. 2020 at ¶¶ 110-113)—are addressed in the '829 patent. This is not surprising because all of these "problems" were well understood to a person of ordinary skill in the art by the time of the '829 patent, as were the solutions on how to address them.

EX1072, ¶19 (same for all IPRs)

'722	'829
'830	'910

Reply to POR '722, 15-16; Reply to POR '829, 14-15; Reply to POR '830, 14-15; Reply to POR '910, 14.

K-fee Argues that Yoakim, but Not Jarisch, Addresses Vibration

K-fee asserts that Yoakim recognizes and addresses the issue of vibrations

[0484] Furthermore, in addition to snugly supporting all the capsules for avoiding vibrations, the capsule holder can be hollow at its centre to be able to accommodate all capsules of the set. In another mode, the capsule holder could have a bottom wall which is deep enough to receive the longer (i.e., deeper) capsule of the set. The advantage is essentially that a unique capsule holder is sufficient to receive all the capsules of the set.

EX1004, [0484]

K-fee asserts that Jarisch's capsule does not engage the interior of cell 3

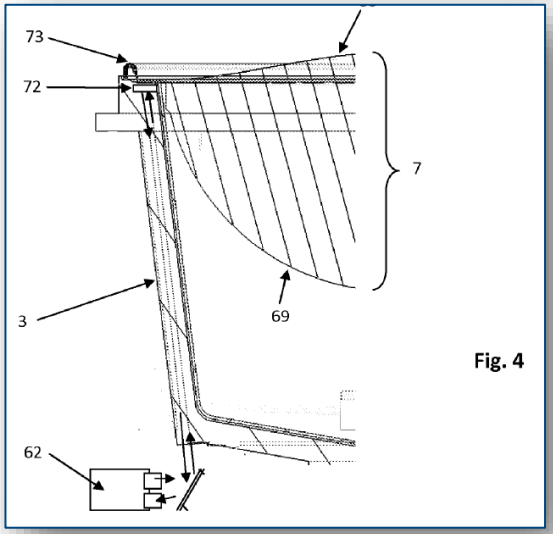

Fig. 4

EX1005, Fig. 4

See also EX1006, Fig. 5

POR '722, 29, 31, 41; POR '829, 26, 28, 40; POR '830, 30, 32, 44; POR '910, 29, 31, 44.

'722	'829
'830	'910

K-fee Argues Yoakim, but Not Jarisch, Has a Widening Sidewall Angle

[0261] Therefore, the angle of the widening sidewall has been determined to promote the exit of the liquid extract from the capsule at the outlet side of the capsule, i.e., at an annular, peripheral portion of the upper wall of the capsule. In particular, an angle of about 60 degrees has shown remarkable results whereas an angle of 85 degrees has shown poor results (i.e., coffee does not come out of the capsule).

EX1004, [0261]

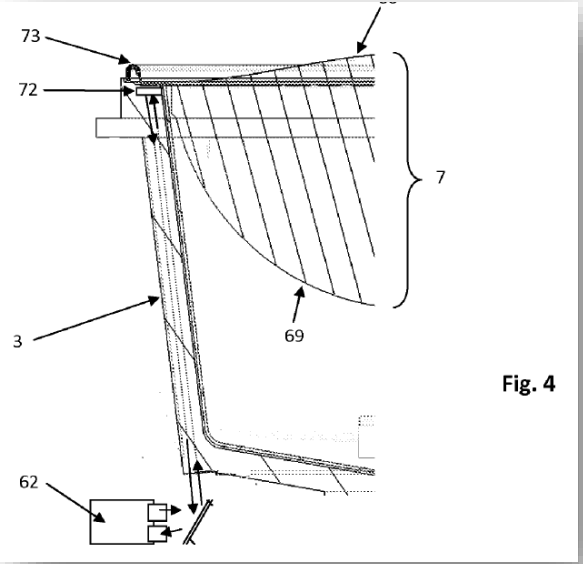

Fig. 4

EX1005, Fig. 4
See also EX1006, Fig. 5

’722	’829
’830	’910

POR ’722, 29-30; POR ’829, 32; POR ’830, 32; POR ’910, 31.

IPR2024-00299
Nespresso USA, Inc. Ex. 1075
Page 44 of 265

Jarisch Teaches How to Read a Rotating Code

[0039] The code is preferably repeated along the circumference in order to ensure a reliable reading. The code is repeated at least twice on the circumference. Preferably, the code is repeated three to six times on the circumference. Repetition of the code means that the same code is duplicated and the successive codes are positioned in series along the circumference so that upon a 360-degree rotation of the capsule, the same code can be detected or read more than one time.

EX1005, [0039]

[0099] The code preferably comprises three sections, the synchronization section, the payload section and the verification section. The synchronization section serves for the synchronization purpose i.e. to inform the sensor when the code begins. Since the speed of the rotation of the capsule can vary, the synchronization is achieved through a known sequence of bits such as **0,1,0,1**. Then the payload of the code identifying the capsule can be read. In order to avoid misinterpretation of the code, the payload can be followed by verification bits. These bits can be a checksum on the payload or a similar verification function.

EX1005, [0099]

’829

’830

Reply to POR ’829, 9-10; Reply to POR ’830, 9-10; POR ’829, 30; POR ’830, 34.

Jarisch 929 Also Teaches How to Read a Rotating Code

[0068] The sequence is preferably repeated along the circumference in order to ensure a reliable reading. The sequence is repeated at least twice on the circumference. Preferably, the sequence is repeated three to six times on the circumference. Repetition of the sequence means that the same sequence is duplicated and the successive sequences are positioned in series along the circumference so that upon a 360-degree rotation of the capsule, the same sequence can be detected or read more than one time.

EX1006, [0068]

rotation, the amount of coded data may be raised and/or the area covered by each symbol may be enlarged, improving the overall reliability of the readings. By "sequentially" it should be understood that one or a limited number of symbols (less than the number of symbols comprised in each sequence) are read at a given time: for instance, each symbol can be read separately, or depending on the capacities of the reading arrangement, a plurality of symbols can be read at time, for example 3 symbols at time for a sequence comprising 36 symbols. As a consequence, at least one reading of all the symbols included in all the sequences in the support can be performed by the reading arrangement after a 360 degrees rotation of the capsule around its axis of rotation.

EX1006, [0016]

'722

'910

Reply to POR '722, 30; Reply to POR '910, 28; POR '722, 32; POR '910, 33-34.

Expectation of Success – There is No Prosecution Inconsistency

Fisher (Ex.2024 Fig. 1)

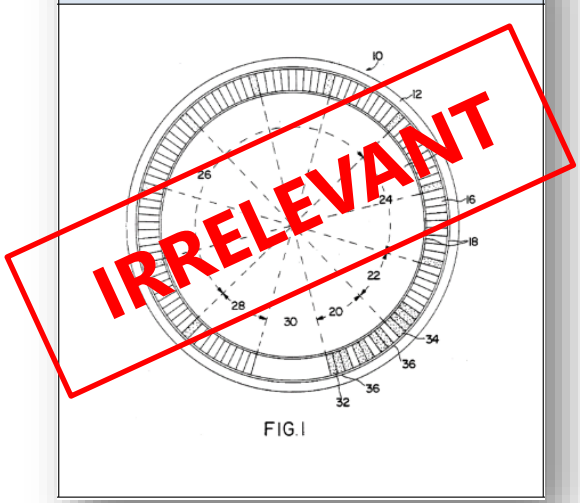

POR '830, 35

See also POR '722, 33; POR '829, 31; POR '910, 35

- Applicant argued against combining a coffee system with a gaming chip.
- The Fisher **gaming chip** reference is irrelevant to what Jarisch teaches.
- K-fee failed to compare claims from prior prosecution to the challenged claims here.

'722	'829
'830	'910

Reply to POR '722, 16; Reply to POR '829, 15-16; Reply to POR '830, 15-16; Reply to POR '910, 15.

Expectation of Success – A POSITA Would Be Able to Apply Jarisch(929)'s Straight Chamber to Yoakim's System

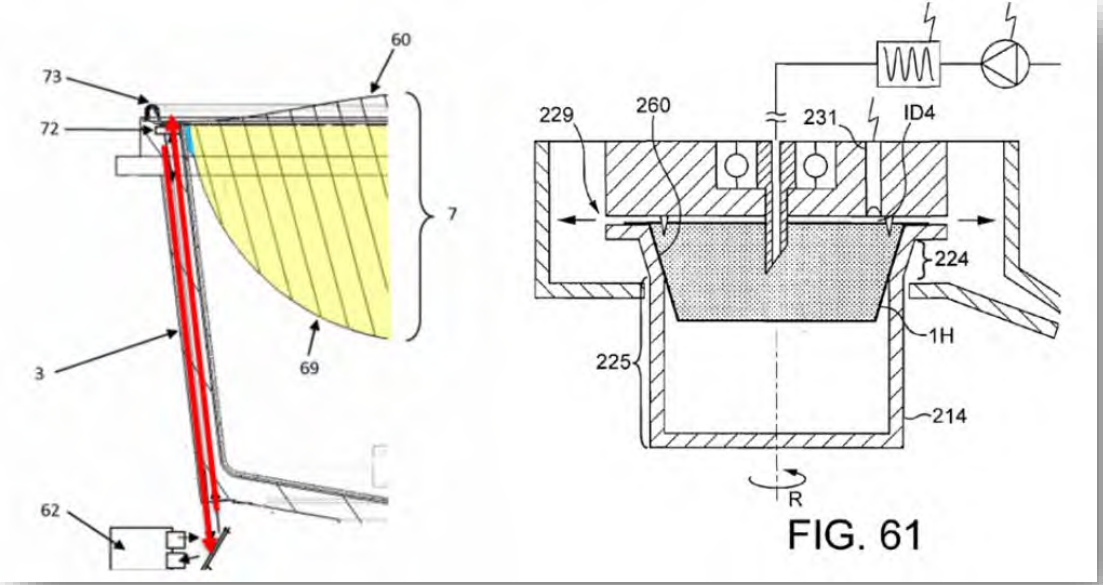

EX1005, Fig. 4
See also EX1006 Fig. 5

EX1004, Fig. 61

- K-fee demands bodily incorporation
- Jarisch/Jarisch 929 depicts a ***straight chamber*** to transmit light.
- K-fee never argues that Yoakim ***prohibits*** a straight chamber that would also accommodate multiple-sized capsules.
- A POSITA would be capable of implementing a straight chamber solution.

'722	'829
'830	'910

Reply to POR '722, 17; Reply to POR '829, 16; Reply to POR '830, 16; Reply to POR '910, 15.

IPR2024-00299
Nespresso USA Inc. Ex. 1075
Page 48 of 265

Expectation of Success – Bent Chamber Not Required

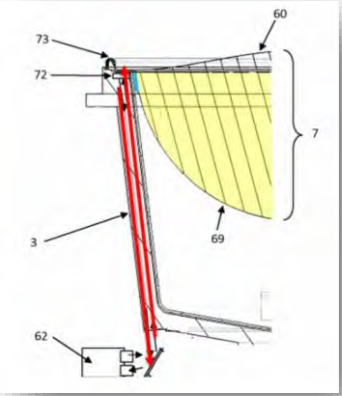

EX1005, Fig. 4

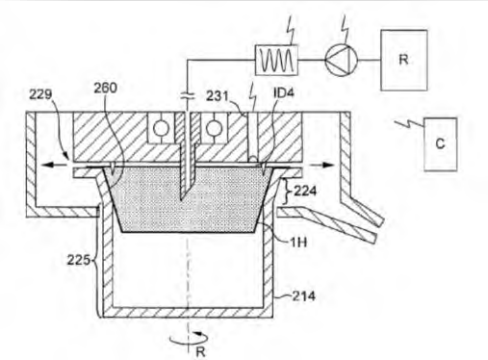

EX1004, Fig. 61

For the sensor/detector to pass light bidirectionally through this flare to successfully read a code, Yoakim would require extensive modifications, including mirroring or index-of-refraction matching within the flared structure. This would have been particularly challenging given the fact that the barcode of Yoakim would be read while the capsule holder is rotated. The use of Jarisch's transparent material would also have contributed to undesired impairment to the light available for detection. Ex.2020, ¶121; *see* Ex.2021 at 2:18-47.

NOT THE PETITION'S MAPPING

POR '829, 35

See also POR '722, 35-36, POR '830, 37-39, POR '910, 37-39

'722	'829
'830	'910

Reply to POR'722, 16-17; Reply to POR '829, 16; Reply to POR '830, 16; Reply to POR '910, 15.

Expectation of Success – Jarisch and Yoakim are Highly Compatible

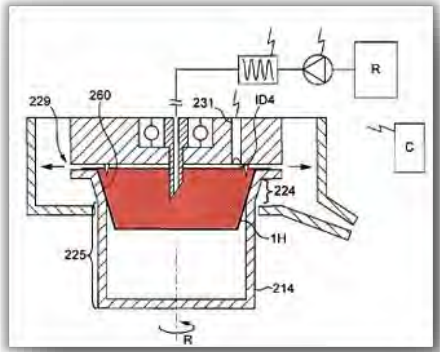

EX1004, FIG. 61

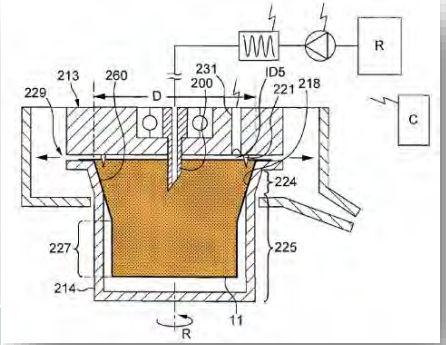

EX1004, FIG. 62

[0006] The invention relates more particularly to the identification of the capsule by means of a code. The code may be necessary to control parameters in the beverage preparation device such as liquid or beverage flow rate, pressure, rotational speed, temperature and combinations thereof.

EX1005, [0006]

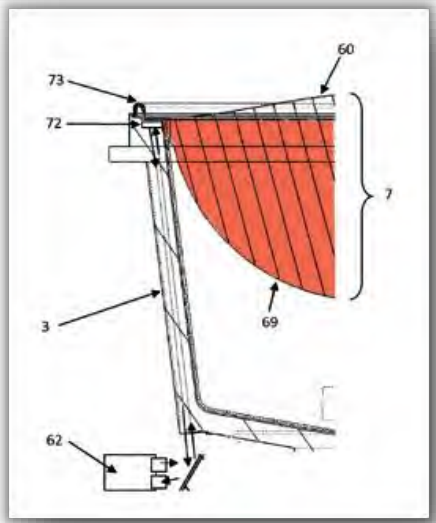

EX1005, FIG. 4

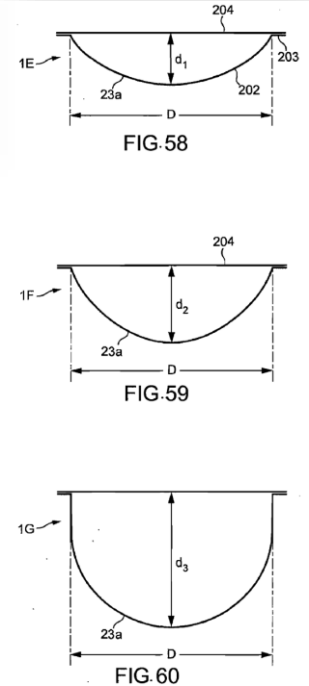

EX1004, FIGs. 58-60

’722	’829
’830	’910

All color has been added to figures.

Pet. '722, 22-23, 38-39; Pet. '829, 22-23, 38-40; Pet. '830, 24-25, 42-43; Pet. '910, 21-22, 38-40, 49; Reply to POR '722,15-16; Reply to POR '829, 14-15; Reply to POR '830, 14-15; Reply to POR '910, 14.

IPR2024-00299
Nespresso USA Inc. Ex. 1075
Page 50 of 265

Expectation of Success – K-fee Ignores the Petition Mapping

Yoakim never requires the FIG.24 chamber not even shown in FIG. 61

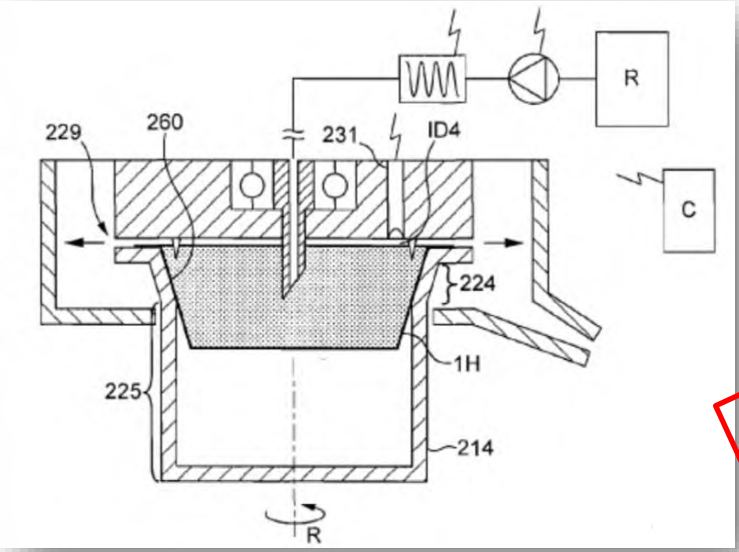

EX1004, Fig. 61

Resolving this problem would have been particularly challenging given the fact that the barcode of Yoakim would be read while the capsule holder is rotated. The use of Jarisch's transparent material would also have contributed to impairment to the light available for detection. *See* Ex.2021, 2:18-47. This effect is even further exacerbated when trying to envision the required light transmission through a capsule holder like Yoakim Fig. 24. The only path to the code on the flange is through the wave-like structure of the hollow teeth 440. Ex.2020, ¶120.

NOT THE PETITION'S MAPPING

POR '829, 34
See also POR '722, 35-36, POR '830, 38, '910, 38-39

'722	'829
'830	'910

Reply to POR '722, 16-17; Reply to POR '829, 14; Reply to POR '830, 16; Pet. '910, 15.

K-fee's Own Evidence Confirms Jarisch Is Optically Detectable

Jarisch929

EX2021:

Co-pending international patent application PCT/EP11/057670 relates to a support adapted to be associated with or be a part of a capsule for the preparation of a beverage. The support comprises a section on which at least one sequence of symbols is represented so that each symbol is sequentially readable, by a reading arrangement of an external device, while the capsule is driven in rotation along an axis of rotation, each sequence codes a set of information related to the capsule. Such invention enables to make a large volume of coded information available, such as about 100 bits of redundant or non-redundant information, without using bar-code readers having moving parts like a scanning element which may raise severe concerns in terms of reliability. Another advantage is also to be able to read the code support by rotating the capsule while the capsule is in place, in a ready to brew position in the rotary capsule holder. How-

EX2021, 2:18-33

'722	'829
'830	'910

Reply to POR'722, 10-11; Reply to POR '829, 10; Reply to POR '830, 10; Reply to POR '910, 9.

Motivation to Combine – No Prosecution Inconsistency

- K-fee failed to analyze the prosecution claims, the Examiner's rejection, or any of the references
- The prior art combination cited in this IPR is different from the prior art referenced during prosecution of Jarisch
- During prosecution of Jarisch, Petitioner never disparaged combining Yoakim with Jarisch, or with any other references
- ***Using Jarisch for its own disclosure and motivation is not inconsistent with Jarisch's patentability over art lacking Jarisch's teachings***

'722	'829
'830	'910

Reply to POR '722, 17; Reply to POR '829, 16-17; Reply to POR '830, 17; Reply to POR '910, 16.

K-fee's Lack of Enablement Arguments Fail

"In general, a prior art reference asserted under § 103 does not necessarily have to enable its own disclosure, i.e., be "self-enabling," to be relevant to the obviousness inquiry."

Raytheon Technologies Corporation v. General Electric Company, 993 F.3d 1374, 1380 (Fed. Cir. 2021)

'722	'829
'830	'910

Reply to POR '722, 11; Reply to POR '829, 11; Reply to POR '830, 11; Reply to POR '910, 10.

IPR2024-00299
Nespresso USA, Inc. Ex. 1075
Page 54 of 265

Jarisch Never Stated that Jarisch 929 Was Not Enabled

Jarisch expressly confirmed that the Jarisch 929 system reads the optical code

Co-pending international patent application PCT/EP11/057670 relates to a support adapted to be associated with or be a part of a capsule for the preparation of a beverage. The support comprises a section on which at least one sequence of symbols is represented so that each symbol is sequentially readable, by a reading arrangement of an external device, while the capsule is driven in rotation along an axis of rotation, each sequence codes a set of information related to the capsule. Such invention enables to make a large volume of coded information available, such as about 100 bits of redundant or non-redundant information, without using bar-code readers having moving parts like a scanning element which may raise severe concerns in terms of reliability. Another advantage is also to be able to read the code support by rotating the capsule while the capsule is in place, in a ready to brew position in the rotary capsule holder. How-

EX2021, 2:18-33

’722	’829
’830	’910

Reply to POR ’722, 10-11; Reply to POR ’829, 10; Reply to POR ’830, 10; Reply to POR ’910, 9.

The Patent Office Already Determined Jarisch To Be Enabled

the lid." (Ex. 1073 at claim 1). I understand that before the Patent Office grants a patent, it has made a determination that the specification sufficiently explains to a person of ordinary skill in the art how to make and use the claimed invention without undue experimentation. Accordingly, by granting the Jarisch '600 and Jarisch '876 patents, the Patent Office has already determined that the disclosure in Jarisch and Jarisch 929 are sufficient to teach a person of ordinary skill in the art how to make and use a capsule with an identifier located on the bottom of the flange that can be identified or read by an external reader. I agree with the Patent Office's assessment on that point.

Jobin Reply Decl. (EX1072), ¶15

The invention claimed is:

1. A capsule for the preparation of a beverage, the capsule comprising a container configured to house a beverage ingredient, the container comprises a cup-shaped body having a flange-like rim, a lid connected to the cup-shaped body, and a code adapted for being identified or read by an external reader, the code is arranged on a bottom of the flange-like rim, which is opposed to the lid, to be read while the capsule is rotated around an axis of rotation traversing the capsule, wherein the container comprises a circumference, the code comprises successive segments that extend substantially along at least an eighth of the circumference, the cup-shaped body extends from a bottom end of the cup-shaped body to a top end of the cup-shaped body where the cup-shaped body terminates such that a height of the cup-shaped body is the distance from the bottom end to the top end, the flange-like rim extends from the top end of the cup-shaped body, and the lid has a height that is less than the height of the cup-shaped body.

EX1069, claim 1

'722	'829
'830	'910

Reply to POR '722, 10; Reply to POR '829, 9; Reply to POR '830, 9; Reply to POR '910, 8.

The Patent Office Already Determined Jarisch 929 To Be Enabled

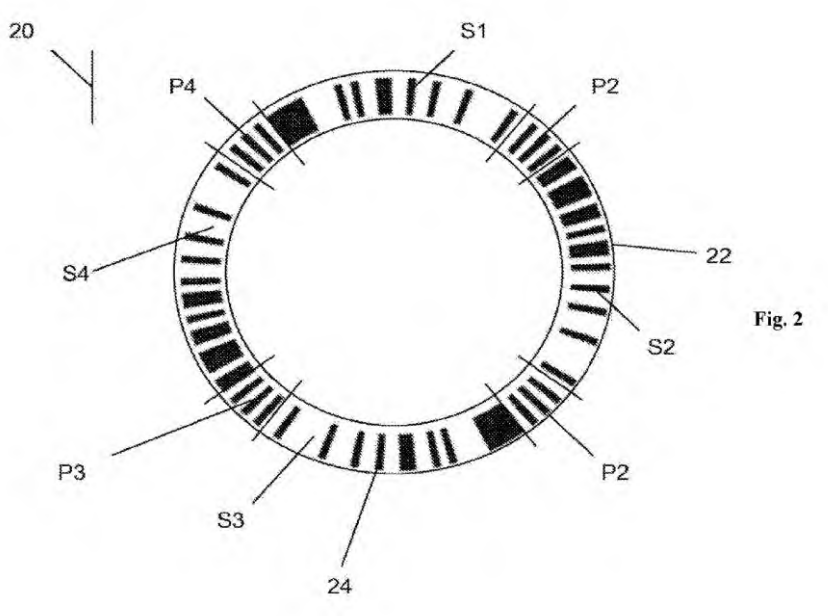

Fig. 2

EX1006, Fig. 2

The invention is claimed as follows:

1. A capsule for the preparation of a beverage, the capsule comprising a container and a beverage ingredient contained therein, wherein the container comprises at least one support comprising a section on which a plurality of sequences of symbols is represented so that each symbol is sequentially readable, by a reading arrangement of an external device, while the capsule is rotated along an axis of rotation, each sequence coding a set of information related to the capsule, wherein at least one of the sequences comprises symbols defining a preamble sequence that allows determination of a position of the symbols in the associated sequence coding the set of information related to the capsule, the container comprising a cup-shaped body having a flange-like rim and a lid connected to the body, wherein the support is present on a bottom of the rim, and the bottom of the rim is opposed to the lid.

EX1073, claim 1

’722	’829
’830	’910

Reply to POR ’722, 10; Reply to POR ’829, 9; Reply to POR ’830, 9; Reply to POR ’910, 8.

EX2021 Improves Jarisch 929 for Commercialization

ready to brew position in the rotary capsule holder. However, one disadvantage lies in that those reading conditions remain specifically difficult for different reasons, such as because the incoming and outgoing rays of light must traverse the capsule holder when the capsule is held by the capsule holder, causing the loss of a great part of energy and/or because the light rays may incur significant angular deviations due to particular mechanical constraints born by the rotating assembly of the machine and possibly coming from different origins (e.g., vibrations, wearing, unbalanced mass distribution, etc.). Furthermore, it is not suitable to compensate the loss of reflectivity by improving the performance of the light emitting and sensing devices of the machine as it would make the beverage preparation machine too expensive.

EX2021, 2:33-47

The present invention relates to an improved code support and capsule comprising said support in particular for providing an enhancement of the optical signal generated from the code support. In particular, a problem met with an optical code on a capsule is that light-reflecting and light-absorbing signals can be difficult to discriminate.

EX2021, 3:3-8

Reply to POR '722, 10-11, 16;Reply to POR '829, 10-11, 15; Reply to POR [illegible] 14.

IPR2024-00299
Nespresso USA, Inc. Ex. 1075
Page 58 of 265

Prior Art Need Not Be Commercial Grade

"The [prior art] simply did not work at 'production speed.' As discussed, however, the claims do not require a threshold throughput or commercial speed."

Geo. M. Martin Co. v. Alliance Machine Systems Intern. LLC, 618 F.3d 1294, 1303 (Fed. Cir. 2010)

'722	'829
'830	'910

Reply to POR '722, 11; Reply to POR '829, 10-11; Reply to POR '830, 10-11; Reply to POR '910, 9-10.

Glucksman's Own Patents Were Not Commercially Viable

Q I'm just asking if the product that's described in this '930 patent was a commercially viable product at the time?

MR. BROOKS: Objection. Relevance.

A I may -- I can answer it in a way that we did not prototype or manufacture the product in its entirety at the time of the application.

Q So, at the time of the application, this was not in a place that was ready for commercialization; is that right?

A That's -- that is correct.

EX1071, 63:4-14

'722	'829
'830	'910

Reply to POR '722, 11; Reply to POR '829, 11; Reply to POR '830, 11; Reply to POR '910, 10.

IPR2024-00299
Nespresso USA, Inc. Ex. 1075
Page 60 of 265

K-fee's Patents Undercut its Enablement Challenge

Substantial evidence supports and enabling disclosure when it:

> *"[is] at a level of detail similar to those contained in the [patent-at-issue]"*

Motorola, Inc. v. Interdigital Technology Corp., 121 F.3d 1461, 1471 (Fed. Cir. 1997)

'722	'829
'830	'910

Reply to POR '722, 10; Reply to POR '829, 10; Reply to POR '830, 10; Reply to POR '910, 9.

K-fee's Patents Disclose Far Less Than Jarisch

magnetic material. As shown by the arrow **15** the barcode **50** alternatively can be attached to the base element's edge region being averted from the membrane **4**. Such a barcode is read out by a detector **13** placed, for example, in the media chute. The barcode represents the identifier according to invention.

EX1001 '829 Patent, 8:54-59
See also EX1001 '722, 8:64-66; EX1001 '830, 8:56-58; EX1001 '910, 8:52-55

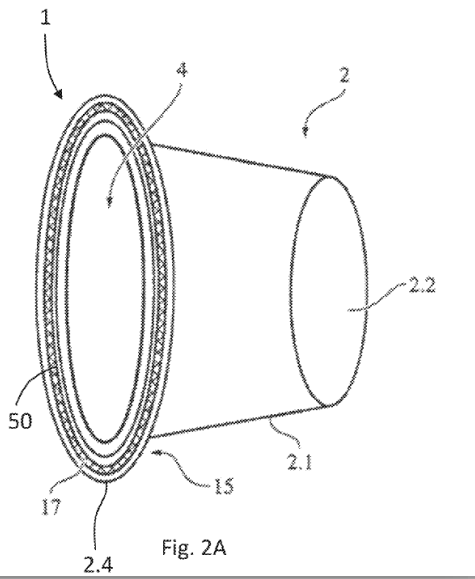

Fig. 2A

EX1001 '829 Patent, Fig. 2A
See also EX1001 '722, Fig. 2A; EX1001 '830, Fig. 2A; EX1001 '910, Fig. 2A

'722	'829
'830	'910

Reply to POR '722, 10; Reply to POR '829, 9-10; Reply to POR '830, 9-10; Reply to POR '910, 8-9.

Jarisch 929 Provides *Substantially More* Disclosure than the Challenged Patents

[0027] Each symbol may be represented in the section by an entity having a measurable characteristic, readable by the measuring arrangement, the measurable characteristic varying according to the value conveyed by said symbol. Each symbol may be printed and/or embossed. The shape of the symbols may be chosen amongst the following non-exhaustive list: arch-shaped segments, segments which are individually rectilinear but extend along at least a part of the section, dots, polygons, geometric shapes. The symbols may be readable by an optical sensor included in the reading arrangement, the color and/or the shape of each symbol being chosen according to the value of said symbol. The symbols may be printed by an ink which is not visible by human eyes under natural light e.g., ink visible under UV. The symbols may be printed or embossed by a pattern which possesses surfaces having different reflective and/or absorbing properties to light. The pattern may possesses first surfaces having inclined mirroring or absorbing properties to light and second surfaces having flat mirroring or flat reflective properties to light. Other variable physical characteristics may be chosen to distinguish each symbol, for example the color, the reflectivity, the opacity, the light absorption level, the magnetic field, the induced magnetic field, the resistivity, the capacity, etc. For instance, the sequence can be composed with four different symbols coding respectively one of the four set of data '00', '01', '10', '11', each symbol having the shape of a dot or a square, and a black color or a 25% gray color. In this example, a black dot may code '00', a gray dot '01', a black square '10', a gray square to '11'.

EX1006, [0027]

2) Optical Reading on Rim Bottom Side of Capsule (FIGS. 5 to 8):

[0090] The capsule **7** may comprise a support mounted having at least one sequence **70**, and mounted on the bottom side **72** of the rim **73** of the capsule. The symbols are represented by small rectangular surfaces having light mirroring properties and intermediate surfaces having flat mirroring and/or diffusing properties. The surfaces are arranged in a circular pattern or at least along an angular portion of the rim.

[0091] A light beam **74** is projected to the capsule's rim **73**.

[0092] The symbols may be represented by:

- **[0093]** Inclined mirroring or (flat) absorbing surfaces coding a binary value of "0" and
- **[0094]** Flat mirroring or flat reflective (diffusing) surfaces coding a binary value of "1".

[0095] The sequence is read by rotating the capsule along its central axis A.

[0096] The reader may consist of

- **[0097]** A light source with/without focusing optic and,
- **[0098]** A light sensor with/without focusing optic. The light can be:
  - **[0099]** Non polarized or
  - **[0100]** Polarized (laser) or
  - **[0101]** Spectrum: Any, but preferably infra red.

[0102] The code can be applied on the capsule by:

- **[0103]** Printing (absorbing/reflecting+diffusing), visible, invisible or,
- **[0104]** Laser engraving (e.g. for absorbing/reflecting-diffusing) surfaces or,
- **[0105]** Embossing: Flat and inclined mirroring surfaces.

EX1006, [0090]-[0105]

[0106] In the embodiment of the FIG. **5**, the light source is placed at the bottom of the centrifugal cell **3**. This cell is light conductive allowing the beam to reach the bottom side **72** of its rim **73**. The reflected light is conducted by the transparent (or light conductive) centrifugal cell **3** to reach the sensor **62**. In case that the sensor **62** cannot be aligned with the transparent part of the centrifugal cell **3**, a mirror can be placed as illustrated in the FIG. **5** to deflect the forward and backward beams.

[0107] On FIG. **6**, the light beam **74** from the light source "L" touches the mirror surface of the symbol **81** and is reflected into a reflective beam **76** to the sensor "S" with high intensity. A bit such as "0" or "1" is thereby provided to the control unit.

[0108] On FIG. **7**, the light beam **74** from the light source "L" touches diffusing or absorbing surfaces (symbol **82**). The light beam **77** that reaches the sensor is of small intensity. Other beams such as beam **78** are diffused outside the sensor S due to the diffusing properties of the surface.

[0109] A bit such as "1" or "0" is provided to the control unit.

[0110] Therefore, the number of symbols depends on the number and specific arrangement of mirror surfaces (e.g. rectangles) and diffusing or absorbing surfaces (e.g., zones between the rectangles). The sequence can be repeated several times on the circumference of the rim. This repetition provides redundancy and more reliability to the reading.

[0111] Optionally (FIG. **8**), the symbols are represented by different color patterns combined with a color reading device. The combination of different colors and reading at a specific rotational speed results in a well defined "mixed color". As an example, a capsule with half the "dots" in blue and the other half in yellow would result in reading a green color during rotation.

EX1006, [0106]-[0111]

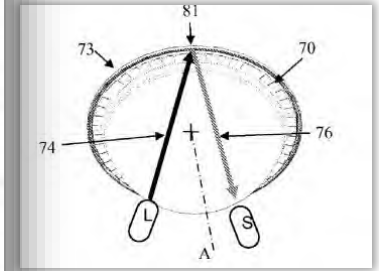

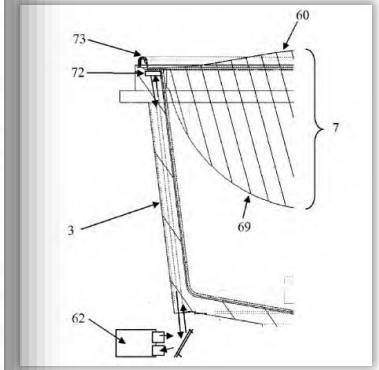

EX1006, Figs. 4, 5

'722

'910

Reply to POR '722, 1-7; Reply to POR '910, 8-9.

As Does Jarisch

[0037] The capsule is designed for rotating around an axis A. This axis A crosses perpendicularly the center of the membrane which has the form of a disk. This axis A exits at the center of the bottom of the body. This axis A will help to define the notion of "circumference" which is a circular path located on the capsule and having the axis A as reference axis. This circumference can be on the lid, e.g., membrane or on the body part such as on the flange-like rim. The lid may be impervious to liquid before insertion in the device or it may be pervious to liquid by means of small openings or pores provided in the center and/or periphery of the lid. The code is spread along the circumference or a part of the circumference. The code may comprise successive arch-shaped segments. The code may also comprise successive segments which are individually rectilinear but extend along at least a part of the circumference. According to one embodiment, the sensor cannot read the code without the rotation of the capsule. This is the case where the code is spread along at least a eighth, preferably at least a quarter of the circumference or even more. The fact that the code is placed along an arc-shaped line render the reading by a sweep beam very difficult. This is why the rotation of the capsule plays an important role. In case that the code is located on the body, it is then necessary to rotate the capsule to have access, for the sensor, to the entire set of marks composing the code. The code is further located close to the peripheral edge of the capsule. The peripheral edge is defined as the outermost circular line of the capsule. Preferably, the distance of the code from the peripheral edge is not more than 10 mm, more preferably not more than 8 mm.

[0038] According to an embodiment, the code is printed by an ink which is not visible by human eyes under natural light (e.g., ink visible under UV). In this case, the sensor further comprises a UV-light beam source and a UV detector.

[0039] The code is preferably repeated along the circumference in order to ensure a reliable reading. The code is repeated at least twice on the circumference. Preferably, the code is repeated three to six times on the circumference. Repetition of the code means that the same code is duplicated and the successive codes are positioned in series along the circumference so that upon a 360-degree rotation of the capsule, the same code can be detected or read more than one time.

EX1005, [0037]-[0039]

[0063] 2) Optical Reading On Rim Bottom Side Of Capsule (FIGS. 4 to 7):

[0064] The capsule 7 may comprise a code 70 on the bottom side 72 of its rim 73. The bit code is formed of a succession of small rectangular surfaces having light mirroring properties and intermediate surfaces having flat mirroring and/or diffusing properties. The surfaces are arranged in a circular pattern or an arc-shaped pattern at least along an angular portion of the rim.

[0065] A light beam 74 is projected to the capsule's rim 73.

[0066] Onto the capsule rim, a bit code is applied along a circular or arc-shaped path of the rim.

[0067] The bit code may consist of:

[0068] Inclined mirroring or (flat) absorbing surfaces for bit "0" and

[0069] Flat mirroring or flat reflective (diffusing) surfaces for bit "1"

[0070] The bit code is read by rotating the capsule along its central axis A.

[0071] The reader may consist of

[0072] A light source with/without focusing optic and.

[0073] A light sensor with/without focusing optic.

[0074] The light can be:

[0075] Non polarized or

[0076] Polarized (laser) or

[0077] Spectrum: Any, but preferably infra red.

[0078] The code can be applied on the capsule by:

[0079] Printing (absorbing/reflecting+diffusing), visible, invisible or,

[0080] Laser engraving (e.g. for absorbing/reflecting-diffusing) surfaces or,

[0081] Embossing: Flat and inclined mirroring surfaces.

[0082] In the embodiment of the FIG. 4, the light source is placed at the bottom of the centrifugal cell 3. This cell is light conductive allowing the beam to reach the bottom side 72 of its rim 73. The reflected light is conducted by the transparent (or light conductive) centrifugal cell 3 to reach the sensor 62. In case that the sensor 62 cannot be aligned with the transparent part of the centrifugal cell 3, a mirror can be placed as illustrated in the FIG. 4 to deflect the forward and backward beams.

[0083] On FIG. 5, the light beam 74 from the light source "L" touches the mirror surface of the code (small rectangle 81) and is reflected into a reflective beam 76 to the sensor "S" with high intensity. A bit such as "0" or "1" is thereby provided to the control unit.

[0084] On FIG. 6, the light beam 74 from the light source "L" touches diffusing or absorbing surfaces (surface 82 between two small rectangles). The light beam 77 that reaches the sensor S is of small intensity. Other beams such as beam 78 are diffused outside the sensor S due to the diffusing properties of the surface.

[0085] In each configuration (e.g., FIGS. 5-6), a bit such as "1" or "0" is provided to the control unit.

[0086] Therefore, the number of bits and their bit code depend on the number and specific arrangement of mirror surfaces (e.g. rectangles) and diffusing or absorbing surfaces (e.g., zones between the rectangles). The same sequence of bits forming a "code" can be repeated several times on the circumference of the rim. This repetition provides redundancy and more reliability to the reading.

[0087] Optionally (FIG. 7), the code comprises different color patterns combined with a color reading device. The combination of different colors and reading at a specific rotational speed results in a well defined "mixed color". As an example, a capsule with half the "dots" in blue and the other half in yellow would result in reading a green color during rotation.

[0088] 3) Application Modes Of Codes Onto A Capsule

[0089] The codes described in the previous examples can be applied by different methods onto a capsule such as by:

[0090] Printing or mechanical deforming on a formed capsule or,

[0091] Printing or mechanical deforming on the capsule raw material (foil) before container forming or,

[0092] Printing on outer surface of a capsule container or,

[0093] Printing on the inner surface of a capsule container, using the curl as information support (Aluminum capsule technology).

EX1005, [0063]-[0093]

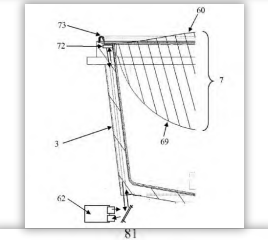

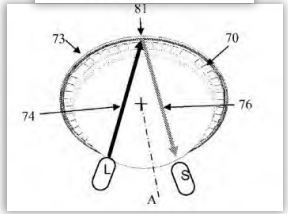

'829

'830

EX1005, [0037]-[0039], [0063]-[0093]; Figs. 4-5

Reply to FOR 625, 9-16; Reply to FOR 1590, 9-10

K-fee's Own Evidence Demonstrates that Jarisch is Enabled

EX2021 confirms that Jarisch's code was optically readable

Surprisingly, the proposed solution enables to improve the readability of the generated signal. Furthermore, it can form a structure which can be easily integrated to a capsule, e.g., be formed into a three-dimensional containment member (e.g., body and rim).

EX2021, 5:45-49

'722	'829
'830	'910

Glucksman Did Not Properly Analyze Enablement

Q Do you understand this patent to be enabled?

MR. BROOKS: Objection.

A I don't understand the term "enable," I apologize.

EX1071, 65:17-21

Q You don't understand the term enablement?

A No.

EX1071, 65:22-66:2

’722	’829
’830	’910

Reply to POR ’722, 2; Reply to POR ’829, 2; Reply to POR ’830, 2; Reply to POR ’910, 1.

K-fee's Reliance on *Raytheon Techs. Corp. v. General Elec. Co.* is Misplaced

- *Raytheon* involved a ***single-reference*** §103 challenge.
- Unrebutted evidence demonstrated that the cited reference disclosed technology that ***did not exist at the relevant time***.
- *"According to Raytheon, the aggressive parameters disclosed in Knip, and therefore, its* ***power density, relied on "revolutionary" materials unavailable as of the priority date*** *of the '751 patent."*

  Raytheon Technologies Corporation v. General Electric Company, 993 F.3d 1374, 1379 (Fed. Cir. 2021)

'722	'829
'830	'910

Reply to POR '722, 11; Reply to POR '829, 11; Reply to POR '830, 11; Reply to POR '910, 10.

IPR2024-00299
Nespresso USA, Inc. Ex. 1075
Page 67 of 265

Jobin Never Testified that it Would Take "Years" or "Dozens of Iterations"

Q. And so if you're building a new product, approximately how many prototype designs would you go through?

A. It's unique to every client and every process in every project. It really depends on how innovative or how cutting edge the technology might be. It depends on the -- sort of the nature of the client as to their appetite for higher risk products -- projects. Sometimes these technology development efforts are not successful initially. They take some time.

EX2025, 28:5-18

Q. If you were asked to design a beverage machine around a new capsule, approximately how many prototypes would you expect to have to make?

A. It's a pretty broad hypothetical question. I really couldn't answer it because the technology just -- it really depends on how related to existing technology it is and how risky or how unproven that approach might be. I've been involved in, you know, early stage R and D, napkin sketch-type concepts, and I've been involved in re-skins, I've been involved in that full range of product development.

EX2025, 30:20-31:2-11

'722	'829
'830	'910

Reply to POR '722, 11; Reply to POR '829, 11; Reply to POR '830, 11; Reply to POR '910, 10.

IPR2024-00299
Nespresso USA Inc. Ex. 1075
Page 68 of 265

Motivation to Combine Rossi with Yoakim and Jarisch(929) and Pump Control/Activation

’722, ’829, ’830, and ’910 Patents

DEMONSTRATIVE – NOT AN EXHIBIT

Pump Control Limitations

’722 Patent

Claim element [1.g] : **a pump controlled to push water** into the portion capsule **only upon a determination** that the read optically detectable **identifier agrees with a stored reference**,

EX1001 ’722, claim 1

’829 Patent

Claim element [1.o] : **a pump controlled** to supply hot water into the portion capsule **only upon detection of the identifier by the sensor/detector and a determination** by the beverage machine that portion capsule is **suitable for use** with the beverage machine.

EX1001 ’829, claim 1

Disclosed by Yoakim
Disclosed by Rossi

’722	’829
’830	’910

IPR2024-00299
Nespresso USA, Inc. Ex. 1075
Page 70 of 265

Pump Control Limitations

’830 Patent

Claim elements [1.k]-[1.l]/[8.k]&[8.l]: the optically detectable individualization **identifier is configured to be read by a sensor/detector of** a beverage machine to individualize the portion capsule and **to activate a pump** of the beverage machine

EX1001 ’830, claims 1 & 8

’910 Patent

Claim elements [1.o]&[1.r]/[8.o]&[8.r]: wherein the individualization identifier:…iv) encodes information used by the specific coffee machine **to activate a pump** of the specific coffee machine;

EX1001 ’910, claims 1 & 8

Disclosed by Yoakim
Disclosed by Rossi

’722	’829
’830	’910

Pet. ’800, 50-51, Pet. ’910, 67-68, 70-73

IPR2024-00299
Nespresso USA, Inc. Ex. 1075
Page 71 of 265

K-fee Only Challenges Yoakim and Rossi Separately

*"Non-obviousness **cannot be established** by **attacking references individually** where the rejection is based upon the **teachings of a combination of references**.'"*

In re Merck & Co., 800 F.3d 1091, 1097 (Fed. Cir. 1986) (emphasis added)

K-fee never disputes that Yoakim discloses a pump, nor does it ever challenge that Rossi's identification element satisfies the claimed "determinations"

'722	'829
'830	

Reply to POR '722, 23-24; Reply to POR '829, 20-21; Reply to POR '830, 17-21

Yoakim Discloses a Pump

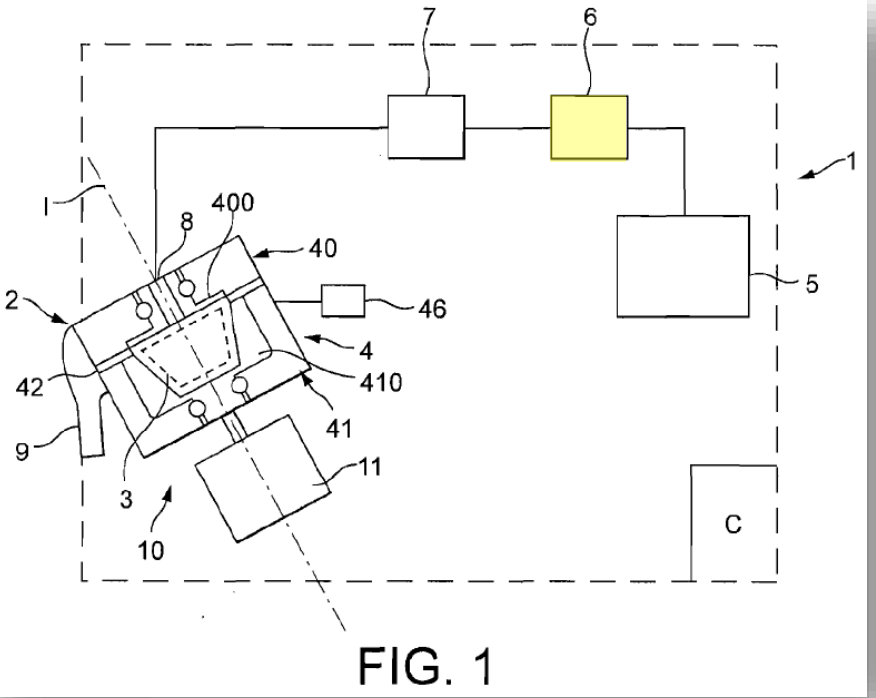

FIG. 1

EX1004, Fig. 1

[0180] The system **1** of the invention is illustrated in FIG. **1** in the more general sense. The system comprises a device **2** and a capsule **3**. The device has a brewing module **4** into which the capsule can be inserted for being brewed and is removed after use for being discarded (e.g., for waste or recycling). The module is in fluid communication with a water reservoir **5** containing fresh or, alternatively heated water. A fluid transport means such as a low pressure pump **6** can be provided in the water circuit to transport water from the reservoir to the module. A water heater **7** is further provided to heat water to the desired temperature. It can be noted that water could be heated in the reservoir itself and water could be transported from the reservoir by effect of vaporisation. Water can be fed into the module **4** at low or substantially no pressure. For example, a pressure between 0 and 2 bars above atmospheric pressure can be envisaged at the inlet **8** of the module.

EX1004, [0180]

’722	’829
’830	’910

Pet. ’722, 44 & 54; Pet. ’829, 43-44 & 62-63; Pet. ’830, 30-31; Pet. ’910, 21, 70-73

Yoakim Discloses Using Identification Means to Control the Pump

[0477] The capsule system further comprises an identification means associated to the different capsules in the set for identifying each capsule and adjusting brewing parameters accordingly. The adjustable parameters can be the rotational speed, the back-pressure at the outlet of the capsule, and/or the volume of liquid fed in the capsule. The identification means participates to deliver a wider range of beverages having differentiated characteristics (volume, taste, strength, crema, colour, etc.). The identification means are associated to control means placed in the centrifugal brewing device which controls the adjustment of the said parameters, by controlling the rotational motor driving the capsule holder or/and the pump supplying liquid in the capsule.

EX1004, [0477]

’722	’829
’830	’910

Pet. ’722, 54; Pet. ’829, 62-68; Pet. ’830, 60-61; Pet. ’910, 70-71

IPR2024-00299
Nespresso USA, Inc. Ex. 1075
Page 74 of 265

Yoakim Discloses Controlling Liquid Volume by Selectively Activating the Pump

[0522] As known per se, the control of the rotational speed is carried out by the control means selectively activating the rotational motor (not shown) which drives part of the interface assembly **213**, the capsule holder **214** and the capsule together in rotation. The control of the volume of liquid injected in the capsule is carried out by the control means selectively activating the pump **211** to meter the proper volume of liquid.

EX1004, [0522]

’722	’829
’830	’910

Reply to POR ’722, 24; Reply to POR ’829, 21; Reply to POR ’830, 21; Reply to POR ’910, 22

Rossi is Designed to Control the Brewing Process

The present invention relates to a system of an edible-product making machine and a load element, and a process for controlling the operation of the edible-product making machine .

The necessary operating conditions of the machine vary depending on the substance within the load element. Such operating conditions may include the amount of water used for each product, the temperature and pressure of the water supplied, as well as the time required for operation. For each substance or type of substance, the operating conditions affect the quality of the final edible product. In order to achieve a desired quality, the contents of the load element must be known and the appropriate operating conditions must be set .

EX1041, 3-4

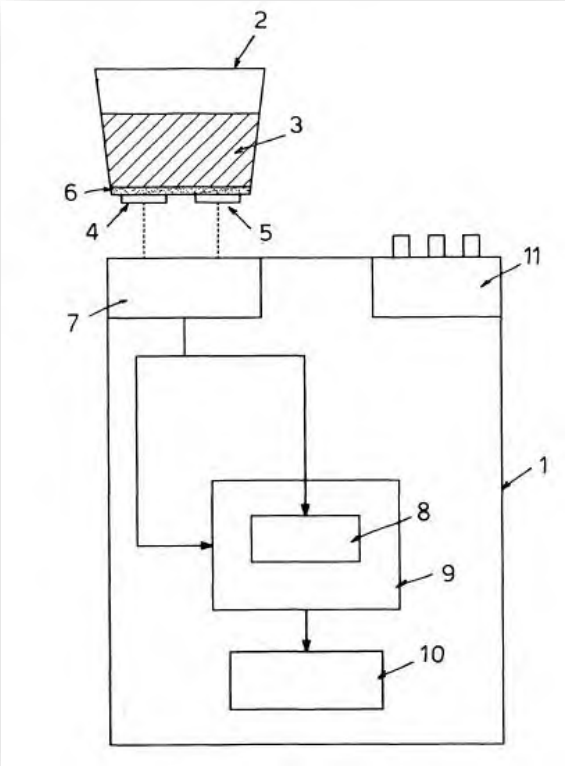

’722	’829
’830	’910

Pet. ’722, 24-25; Pet. ’829, 24-25; Pet. ’830, 24-25; Pet. ’910, 24-25

Rossi Ensures Only Appropriate Capsules Are Used For Safety

design or type of load element. Use of an incorrect load element may cause the machine to malfunction and can prejudice the safety and integrity of the machine and the may harm the user. These types of machines often involve the use of high pressure, high temperature water, which poses a potential health hazard if the machine is not used correctly or malfunctions. Alternatively, use of the wrong operating

Within the scope of this technical task is therefore that of providing a safe and simple system and process for ensuring that an appropriate load element is used.

Ex. 1041, 5

’722	’829
’830	’910

Pet. ’722, 24-25; Pet. ’829, 24-25; Pet. ’830, 22-23; Pet. ’910, 24-25

Rossi Utilizes Optical Codes to Control the System

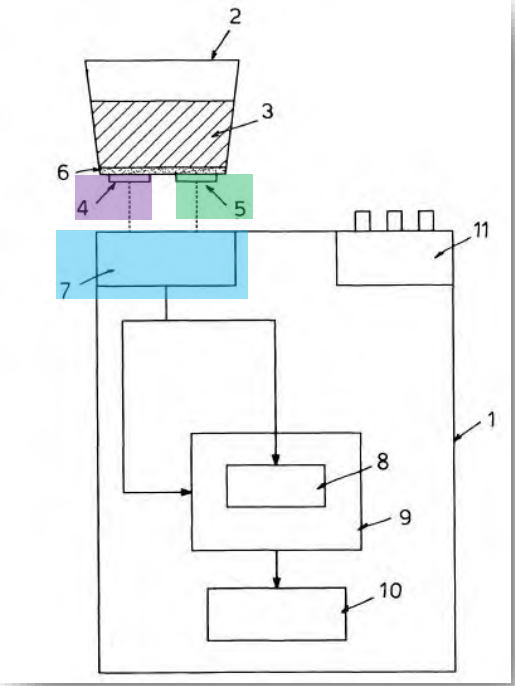

Ex. 1041, FIG. 1 (annotated)

The load element of the system comprises an identifying element for its recognition and a validation element for its validation. These are preferably in the form of barcodes, antennae, or paints having optically measurable properties. The machine comprises means for recognising the load element and the validation element, such as at least one infra red barcode reader, radio frequency wave transmitter and receiver, or optical sensor. These are preferably located

Ex. 1041, 11

’722	’829
’830	’910

Pet. ’722, 25 & 40-41; Pet. ’829, 24-25 & 41-42; Pet. ’830, [illegible] 42

Rossi Discloses Comparing the Identifier to a Stored Reference

The system further optionally comprises checking means connected to a control unit of the machine. This may be in the form of a computer programme within the control unit. The checking means compares the signal from the recognising means for the identifying element and the validation element with pre-stored data in order to allow the machine to proceed to activation only if it recognises the identifying element and the unvalidated validation element. The checking means may be

Ex. 1041, 11

’722	’829
’830	’910

Pet. ’722, 40-41 & 55; Pet. ’829, 24-25 & 41-42; Pet. ’830, 2[illegible]

Rossi's Process

Step 1
Recognizing an identifying element on the capsule and allowing the machine to take further steps only if it also recognizes a validation element

Step 2
Validating the validation element

Step 3
Automatically ***activating a cycle of production*** of the coffee product ***only after*** having recognized an identifying element in combination with a validated validation element

'722	'829
'830	'910

Pet. '722, 40-41; Pet. '829, 24-25 & 41-42; Pet. '830, 44-46; Pet. '910, 41-42
Reply to POR '722, 25; Reply to POR '829, 22; Reply to POR '830, 22; Reply to POR '910, 24

IPR2024-00299
Nespresso USA, Inc. Ex. 1075
Page 80 of 265

Rossi Will Not Operate Brewing Unless an Identification Element is Detected and Suitability Determined

The use of an identification element and recognition means, as well as the step of recognising the identification element allows the machine to recognise the load element and, hence, its contents. This in turn enables the machine to automatically select the operating conditions appropriate for that specific load element. This prevents the user from having to verify the contents of the load element, and from having to know and select the operating conditions appropriate therefor. It also helps to prevent the safety hazard associated with the use of inappropriate operating conditions .

validation element are recognised. Thus, the production process cannot be activated unless the first step has been completed. The process could also require that the validation

Ex. 1041, 7 & 9

’722	’829
’830	’910

Pet. ’722, 40-41 & 49; Pet. ’829, 41-42 & 54; Pet. ’830, 44-45 & 58; Pet. ’910, 41-42, 55

IPR2024-00299
Nespresso USA, Inc. Ex. 1075
Page 81 of 265

Rossi's Validation Element Also Determines Suitability For Use

The use of a validation element and validation means, as well as the step allowing the machine to take further steps only if it also recognises on the load element the validation element help to prevent the use of an already-used single use load element in the machine, thereby avoiding the production of an edible product of inferior quality and ensuring the proper functioning of the machine. In the case of re-use of a load element originally containing a water soluble aromatic substance, the dynamics of the fluid flow through the machine could be different if there is no substance in the load unit for the water to contact, thereby causing incorrect functioning of the machine and the associated health hazard.

EX1041, 7

'722	'829
'830	'910

Pet. '722, 40, 49; Pet. '829, 44-45 & 64-65; Pet. '830, 58, 61; Pet. '910, 44, 55

A POSITA Would Be Motivated to Combine Rossi's Process with Yoakim's and Jarisch (929)'s Systems

- Yoakim, Jarisch (929) and Rossi are all in the field of portion capsule beverage extraction and disclose inventions applicable to coffee/espresso machines.
- Rossi's process is intended to improve capsule-based beverage systems like Yoakim's and Jarisch (929)'s.
  - improves ***beverage quality*** by providing greater specificity and accuracy of brewing conditions
  - increases ***safety*** of the machine.

'722	'829
'830	'910

Pet. '722, 39-42; Pet. '829, 40-43; Pet. '830, 39-42; Pet. '910, 40-43

Yoakim Benefits from Rossi's Increased Machine Safety

Yoakim's system can operate at high temperature and pressure

the centrifuge brewing device **207** (FIGS. **54** and **55**). As illustrated in FIG. **54**, the device comprises a brewing unit **800** fed with heated liquid, preferably hot water, by a fluid circuit

EX1004, [0506]

trifugation. Water at higher pressure than 2 bar could also be delivered if a pressure pump is utilized such a piston pump.

EX1004, [0428]

the beverage to be brewed. The higher the rotational speed, the more radial pressure is exerted in the capsule by the liquid

EX1004, [0188]

ated at the restriction. More particularly, the flow restriction means enables to maintain a pressure of several bars at the periphery of the enclosure and so retards the release of the liquid.

EX1004, [0369]

'722	'829
'830	'910

Pet. '722, 39-40; Pet. '829, 40-41; Pet. '830, 44; Pet. '910, 40-41

IPR2024-00299
Nespresso USA, Inc. Ex. 1075
Page 84 of 265

Expectation of Success – Rossi Explains Capsule Recognition

The system further optionally comprises checking means connected to a control unit of the machine. This may be in the form of a computer programme within the control unit. The checking means compares the signal from the recognising means for the identifying element and the validation element with pre-stored data in order to allow the machine to proceed to activation only if it recognises the identifying element and the unvalidated validation element. The checking means may be connected to unlocking means for unlocking the machine when said recognition takes place.

EX1041, 11

’722	’829
’830	’910

Pet. ’722, 40-41 & 55; Pet. ’829, 24-25 & 41-42; Pet. ’830, 27-8, 44-45; Pet. ’910, 41-42, 72-73

IPR2024-00299
Nespresso USA, Inc. Ex. 1075
Page 85 of 265

Expectation of Success – Rossi Uses Capsule Recognition Technology Disclosed in Yoakim and Jarisch (929)

The load element of the system comprises an identifying element for its recognition and a validation element for its validation. These are preferably in the form of barcodes, antennae, or paints having optically measurable properties.

EX1041, 11

’722	’829
’830	’910

Pet. ’722, 41; Pet. ’829, 41; Pet. ’830, 45; Pet. ’910, 42

Expectation of Success – Yoakim and Jarisch Possess Capsule Identification Capabilities That Would Work with Rossi's Invention

[0477] The capsule system further comprises an identification means associated to the different capsules in the set for identifying each capsule and adjusting brewing parameters accordingly. The adjustable parameters can be the rotational speed, the back-pressure at the outlet of the capsule, and/or the volume of liquid fed in the capsule. The identification means participates to deliver a wider range of beverages having differentiated characteristics (volume, taste, strength, crema, colour, etc.). The identification means are associated to control means placed in the centrifugal brewing device which controls the adjustment of the said parameters, by controlling the rotational motor driving the capsule holder or/and the pump supplying liquid in the capsule.

EX1004, [0477]

'722	'829
'830	'910

Pet. '722, 41; Pet. '829, 41; Pet. '830, 45; Pet. '910, 42

The Safety Features Disclosed by Rossi and Yoakim Are Not Redundant

Yoakim only ensures ***properly shaped*** capsules are used

[0205] The driving means of the device further comprise a drive shaft **45** associated to a support **451** for holding the bottom of the capsule. Of course, the shape of the gripping means can take many other variations without departing from the scope of the present invention. FIGS. **12** and **13** show a gripping structure **840** having a central recess **841** and four arched recesses **842**, **843**, **844**, **845** extending from the central recess **841**. This gripping structure forms a lock into which is fitted a complementary engaging structure **450**, i.e., a key, of the capsule holder **451**. The complementary shapes of the capsule and capsule holder enable to fulfill both the gearing function for driving the capsule at high speeds in rotation and a safety function for ensuring that only capsules adapted to the system can be used and brewed successfully.

EX1004, [0205]

Rossi prevents the use of ***unsuitable or re-used*** capsules ***regardless of shape***

The use of an identification element and recognition means, as well as the step of recognising the identification element allows the machine to recognise the load element and, hence, its contents. This in turn enables the machine to automatically select the operating conditions appropriate for that specific load element. This prevents the user from having to verify the contents of the load element, and from having to know and select the operating conditions appropriate therefor. It also helps to prevent the safety hazard associated with the use of inappropriate operating conditions.

proper functioning of the machine. In the case of re-use of a load element originally containing a water soluble aromatic substance, the dynamics of the fluid flow through the machine could be different if there is no substance in the load unit for the water to contact, thereby causing incorrect functioning of the machine and the associated health hazard.

EX1041, 7

’722	’829
’830	’910

Reply POR ’722, 17-18; Reply POR ’829, 17-18; Reply POR ’830, 17-18; Reply POR ’910, 17-18

IPR2024-00299
Nespresso USA, Inc. Ex. 1075
Page 88 of 265

Glucksman Testified that Capsule Shape Alone is Not a Safety Issue and Systems Benefit from Having Multiple Safety Features

Q Is safety to the user an important quality when designing a centrifugal brewing system?

A I would say yes. And, therefore, the designer has to make sure that there are no -- there's no opportunity for the user to be injured by the machine.

Q Such as by using the wrong capsule with the machine, for example?

MR. BROOKS: Objection. Hypothetical.

A It would -- yeah, that would generally not be considered a safety consideration.

Ex. 1071, 44:2-13

Q So the system sealed both the boiling compartment as well as the brewing chamber?

A Yes.

Q So you wanted multiple areas of safety for that aspect; is that right?

A Yes.

Ex. 1071, 51:3-8

’722	’829
’830	’910

Reply to POR ’722, 18; Reply to POR ’829, 17; Reply to POR ’830, 17; Reply to POR ’910, 16

IPR2024-00299
Nespresso USA, Inc. Ex. 1075
Page 89 of 265

Rossi Teaches a Capsule Recognition Process that Addresses Hazards Caused by Unsuitable Capsules or Brewing Conditions

design or type of load element. Use of an incorrect load element may cause the machine to malfunction and can prejudice the safety and integrity of the machine and the may harm the user. These types of machines often involve the use of high pressure, high temperature water, which poses a potential health hazard if the machine is not used correctly or malfunctions. Alternatively, use of the wrong operating conditions with the correct load element may also lead to these consequences. For example, use of an insufficient

EX1041, 5

proper functioning of the machine. In the case of re-use of a load element originally containing a water soluble aromatic substance, the dynamics of the fluid flow through the machine could be different if there is no substance in the load unit for the water to contact, thereby causing incorrect functioning of the machine and the associated health hazard.

EX1041, 7

’722	’829
’830	’910

Pet. ’722, 39-40; Pet. ’829, 40-41; Pet. ’830, 44-46; Pet. ’910, 40-43

IPR2024-00299
Nespresso USA, Inc. Ex. 1075
Page 90 of 265

Rossi's Process Also Provides Greater Specificity and Accuracy for Beverage Systems, Which Improves Beverage Quality

Within the scope of this technical task is therefore that of providing a safe and simple system and process for ensuring that an appropriate load element is used.

A further technical task is that of providing a system and process for ensuring that operating conditions appropriate for the load element are used.

EX1041, 5

The use of a validation element and validation means, as well as the step allowing the machine to take further steps only if it also recognises on the load element the validation element help to prevent the use of an already-used single use load element in the machine, thereby avoiding the production of an edible product of inferior quality and ensuring the proper functioning of the machine. In the case of re-use of a load element originally containing a water soluble aromatic substance, the dynamics of the fluid flow through the machine could be different if there is no substance in the load unit for the water to contact, thereby causing incorrect functioning of the machine and the associated health hazard.

EX1041, 7

'722	'829
'830	'910

Pet. '722, 40; Pet. '829, 41; Pet. '830, 44-45; Pet. '910, 41

IPR2024-00299
Nespresso USA, Inc. Ex. 1075
Page 91 of 265

A POSITA Would have Combined the Systems of Yoakim and Jarisch/Jarisch 929 with Rossi's Safe and Simple Process

204. A person of ordinary skill in the art would have further been motivated to combine the portion capsule and brewing systems of Yoakim and Jarisch with the capsule recognition process of Rossi for the predictable benefit of greater specificity and accuracy of brewing conditions, and increased safety in the machine from preventing machine operation with unsuitable capsules. Rossi discloses a "safe and simple system and process for ensuring that an appropriate [capsule] is used" in the system. (Ex. 1041 at p. 5.) Yoakim discloses using a piston pump to deliver higher

EX1003 '829, ¶204
See also EX1003 '722, ¶219; EX1003 '830, ¶211; EX1003 '910, ¶229

The technical task proposed by the present invention is therefore that of providing a system of an edible-product making machine and load element and process for controlling the operation of the machine that overcome the noted technical drawbacks of the prior art.

Within the scope of this technical task is therefore that of providing a safe and simple system and process for ensuring that an appropriate load element is used.

A further technical task is that of providing a system and process for ensuring that operating conditions appropriate for the load element are used.

EX1041, 5

'722	'829
'830	'910

Pet. '722, 39-40; Pet. '829, 40-41; Pet. '830, 44-45; Pet. '910, 40-41

IPR2024-00299
Nespresso USA, Inc. Ex. 1075
Page 92 of 265

Yoakim's System Operates Under Temperatures and Pressures that Benefit from Rossi's Safety Features

[0188] The rotational speed can be set between about 1000 and 20000 rpm: For this a control unit C (FIG. **1**) is provided in the device for adjusting the rotational speed as a function of the beverage to be brewed. The higher the rotational speed, the more radial pressure is exerted in the capsule by the liquid and the more the substance is compacted on the sidewall of the capsule. Also, the higher the speed, the lower the residence time of the liquid in the capsule.

EX1004, [0188]

[0369] According to an important aspect of the invention, a flow restriction within the flow path of the centrifuged liquid enables to control the release of the centrifuged liquid for improving the interaction of water with the substance within the capsule as well as providing eventually foam to the liquid by the pressure release and the shear stresses which are created at the restriction. More particularly, the flow restriction means enables to maintain a pressure of several bars at the periphery of the enclosure and so retards the release of the liquid.

EX1004, [0369]

[0191] The rotational speed ranges differ as a function of the coffee type to be delivered in order to deliver optimized results, for ristretto (25 ml), espresso (40 ml), lungo (110-120 ml), Americano or long coffee (180-400 ml). In another mode, the flow rate differs as a function of the coffee type. The flow rate of injected liquid in the capsule can be controlled by measuring it with a flow meter. In order for this flow rate to be maintained within a given range or value during beverage centrifugation, the rotational speed is monitored continuously or at very short time intervals. Since the flow rate influences directly the residence time of liquid in the capsule, thereby the brewing conditions, it is preferred to control the flow rate at predetermined values as a function of the desired beverage (e.g., coffee type) rather than controlling the rotational speed at predetermined values.

EX1004, [0191]

[0428] Water can be fed in the beverage preparation module **124** at low pressure or even at gravity pressure. For example, a pressure of between 0 and 2 bar above atmospheric pressure can be envisaged at the water inlet of the module. For instance, the water pump can deliver a water pressure and flow rate sufficient to provide a continuous water flow (i.e., without flow shortage due to the centrifuge pumping effect in the capsule) at the operational centrifugal speeds during centrifugation. Water at higher pressure than 2 bar could also be delivered if a pressure pump is utilized such a piston pump.

EX1004, [0428]

[0506] The capsules **1**A, **1**B are indented to be inserted in the centrifuge brewing device **207** (FIGS. **54** and **55**). As illustrated in FIG. **54**, the device comprises a brewing unit **800** fed with heated liquid, preferably hot water, by a fluid circuit **209** comprising a heater **210**, a pump **211** for metering liquid in the capsule and a liquid supply, e.g., a water reservoir **212**. The brewing unit comprises an interface assembly **213**, a capsule holder **214** and a collector **215**. A peripheral outlet **29**, forming a flow restriction for the centrifuged liquid, is provided, at the periphery of the capsule, e.g., between the interface assembly **213** and the capsule holder or capsule **206**. A flow restriction can be formed by a spring-biased valve situated at and acting on the rim of the capsule as described above. Part of the valve can be formed by the capsule itself as described in co-pending European patent No. 08171069.1. Such flow restrictions provide a back-pressure on the centrifuged liquid. The collector terminates by a beverage outlet **216** such as formed as an open duct directed to the cup. The capsule holder **214** is designed with portion **224** forming a support surface **218** that is complementary shaped to the upper body portion of the capsules **1**A, **1**B.

EX1004, [0506]

'722	'829
'830	'910

Pet. '722, 39-40; Pet. '829, 40-41; Pet. '830, 44; Pet. '910, 44-41

Glucksman Testified that Coffee Systems Require Safety Considerations

Q What would be a safety consideration, then --

A Okay.

Q -- in a centrifugal-based, single-serve brewing system?

A Again, I could be a little more general and saying, for example, if you press a button to open the lid, you want to make sure that when the lid opens, it doesn't hit your hand because of where you put your hand during the pressing the button. You want to make sure that when you are done with the brewing cycle, that -- and you open the lid, no water will spray the user. You want to make sure that the capsule does not explode during the, you know, operation.

Ex. 1071, 44:14-45:6

’722	’829
’830	’910

Reply to POR ’722, 18; Reply to POR ’829, 17; Reply to POR ’830, 18; Reply to POR ’910, 17

Glucksman Also Testified that Controlling Beverage Quality Parameters is Important

Q Okay. What about from a quality point of view.

A From a quality point of view, you would like to make sure that you control the, you know, volume of water and the temperature of water. And in a centrifugal brewing machine, the RPM of the -- the speed of turning to optimize the operation.

Ex. 1071, 46:6-13

’722	’829
’830	’910

Reply to POR ’722, 18; Reply to POR ’829, 17-18; Reply to POR ’830, 17; Reply to POR ’910, 17

Pump Control Undisputed

K-fee never disputes that Rossi's system <u>will not activate</u> unless the identification element is detected and compared to a stored reference.

'722	'829
'830	

Reply to POR '722, 26; Reply to POR '829, 19; Reply to POR '830, 23

K-fee's Improperly Focuses on Unmapped Yoakim Disclosures

[0442]. Indeed, Yoakim highlights the advantage of allowing "several seconds that water fills in the capsule ***before*** starting the centrifugal operation by rotating the capsule." *Id.*, [0441]. As such, a POSITA would have understood from Yoakam's teachings of pre-wetting that Yoakim presents/exemplifies a step-by-step process wherein a low-pressure pre-wetting injection via pump occurs ***prior to*** reading the identification means and the centrifugal brewing operation which depends on various operational parameters.[8] Ex.2020, ¶168.

NOT THE PETITION'S MAPPING

POR '722, 53-54
See also POR '829, 48-49; POR '830, 51

'722	'829
'830	

Reply to POR '722, 24; Reply to POR '829, 21; Reply to POR '830, 21

Prewetting is Optional in Yoakim's System

[0441] For instance, it might be advantageous for brewing ground coffee, to allow during several seconds that water fills in the capsule before starting the centrifugal operation by rotating the capsule. Thus, water can properly infiltrate in the

EX1004, [0441]

'722	'829
'830	

Reply to POR '722, 24; Reply to POR '829, 21; Reply to POR '830, 21

Yoakim Does Not Teach Away from Identifier Control of the Pump

"[Yoakim's] mere disclosure of more than one alternative ***does not constitute a teaching away*** *from any of these alternatives* ***because such disclosure does not criticize, discredit, or otherwise discourage*** *the solution claimed[.]'"*

In re Fulton, 391 F.3d 1195, 1201 (Fed. Cir. 2004)(emphasis added)

'722	'829
'830	

K-fee's Argument that Rossi's Validation Step is Incompatible with Yoakim Fails

This argument:

1. Forces ***improper bodily incorporation***;
2. Ignores Rossi's ***general teachings*** of not activating brewing until the capsule is suitably identified;
3. Overlooks that the identification element and the validation element ***may be identical***; and
4. Ignores that the challenged claims are ***"comprising" claims*** that do not prohibit comparison additional elements.

'722	'829

Reply to POR '722, 23; Reply to POR '829, 22-23

IPR2024-00299
Nespresso USA, Inc. Ex. 1075
Page 100 of 265

Encodes Information Used to Activate the Pump

’910 Patent

Claim elements [1.o]&[1.r]/[8.o]&[8.r]: wherein the individualization identifier:…iv) **encodes information used** by the specific coffee machine **to activate a pump** of the specific coffee machine;

EX1001 ’910, claims 1 & 8

Disclosed by Yoakim
Disclosed by Yoakim, Rossi and Jarisch 929

’910

Yoakim Discloses Encoded Information Used to Activate the Pump

[0477] The capsule system further comprises an identification means associated to the different capsules in the set for identifying each capsule and adjusting brewing parameters accordingly. The adjustable parameters can be the rotational speed, the back-pressure at the outlet of the capsule, and/or the volume of liquid fed in the capsule. The identification means participates to deliver a wider range of beverages having differentiated characteristics (volume, taste, strength, crema, colour, etc.). The identification means are associated to control means placed in the centrifugal brewing device which controls the adjustment of the said parameters, by controlling the rotational motor driving the capsule holder or/and the pump supplying liquid in the capsule.

EX1004, [0477]

[0494] The identification means can be sensed by sensing means connected to the control means for an active control of the parameters or can be passive identification means, e.g., selective flow restriction means.

EX1004, [0494]

[0522] As known per se, the control of the rotational speed is carried out by the control means selectively activating the rotational motor (not shown) which drives part of the interface assembly **213**, the capsule holder **214** and the capsule together in rotation. The control of the volume of liquid injected in the capsule is carried out by the control means selectively activating the pump **211** to meter the proper volume of liquid.

EX1004, [0522]

’910

Jarisch 929 Discloses Encoded Information Used to Activate the Pump

[0012] An object of the invention is to provide means for storing, reading and processing information related to a capsule, more particularly information for identifying said capsule within a production machine and for retrieving or reading information for adjusting working parameters of the machine and/or for controlling parameters for preparing a beverage with said capsule.

EX1006, [0012]

[0021] information related to parameters for preparing a beverage with the capsule, such as the optimal rotational speeds, temperatures of the water entering the capsule, temperatures of the collector of the beverage outside the capsule, flow rates of the water entering the capsule, sequence of operations during the preparation process, etc;

EX1006, [0021]

[0058] Each symbol may be represented in the section by an entity having a measurable characteristic, readable by the measuring arrangement, the measurable characteristic varying according to the value conveyed by said symbol. Each

EX1006, [0058]

'910

IPR2024-00299
Nespresso USA, Inc. Ex. 1075
Page 103 of 265

Rossi Discloses Encoded Information Used to Activate the Pump

the form of a computer programme within the control unit. The checking means compares the signal from the recognising means for the identifying element and the validation element with pre-stored data in order to allow the machine to proceed to activation only if it recognises the identifying element and the unvalidated validation element. The checking means may be

EX1041, 11 (*see also* 7 and 9-10)

'910

Pet. '910, 71-73; Reply to POR, 22-24

IPR2024-00299
Nespresso USA, Inc. Ex. 1075
Page 104 of 265

K-fee's Reliance on Schifferle is Misplaced

Schifferle's pump is activated by the control unit, which uses information from the selector switch

[0021] The selector switch **8** is manually rotated into the position "F" and the cartridge **20** is inserted into the cartridge retainer **12**. Then, the retainer **12** is moved upwards

[0019] The selector switch **8** serves for selecting the coffee beverage to be prepared. The letter "E" denotes espresso coffee, while the letter "F" denotes filter coffee. The selector switch is electrically connected to the control unit **7**. The control unit is operationally connected to the pump **2** via a conductor **9** and to a throttle valve **4** via a conductor **10**. The throttle valve is inserted into a brewing water conduit **19** running from the pump **2** to the closing plate member **11**.

[...]

of markings are possible, for example in electronic form. It is understood that the sensor **28** and the label or marking **27** are matched to each other to enable the sensor **28** to read the label or marking **28** and to forward the information contained therein to the control unit **7**. In the case where

'910

EX1039, [0019], [0021]

Yoakim's Disclosure Renders the Challenged Claims Obvious

'722, '829, '830, and '910 Patents

DEMONSTRATIVE – NOT AN EXHIBIT

K-fee's Argument that the Petition Fails Due to a Lack of Rational for Combining Yoakim's Embodiments Violates Legal Principles

"[T]he Board's approach would require a motivation to combine each element of the claim – even those present together in a reference. **This analysis unduly dissects prior art references into collections of individual elements**, requiring a party showing obviousness to **re-do the work already done in the prior art reference.** The claimed invention and **an invention in the prior art must both be analyzed as a whole** for the same reason: an invention is more than the sum of its individual elements."

Gen. Elec. Co. v. Raytheon Tech. Co., 983 F.3d 1334, 1352 (Fed. Cir. 2020) (emphasis added)

'722	'829
'830	'910

Reply to POR '722, 4; Reply to POR '829, 4; Reply to POR '830, 4; Reply to POR '910, 3

K-fee Provides no Evidence of Unpredictabiligy

*"[T]he nature of the **mechanical arts** is such that 'identified, **predictable solutions**' to known problems may be within the technical grasp of a skilled artisan."*

Tokai Corp. v. Easton Enterprises, Inc., 632 F.3d 1358, 1371 (Fed. Cir. 2011) (emphasis added)

*"A single embodiment may provide broad enablement in cases involving **predictable factors, such as mechanical** or electrical elements."*

MPEP §2164.03 (emphasis added)

K-fee provides no evidence of unpredictability in the mechanical art disclosed by Yoakim

'722	'829
'830	'910

IPR2024-00299
Nespresso USA, Inc. Ex. 1075
Page 108 of 265

Reply to POR '830, 4; Reply to POR '910, 4

A *Reasonable* Expectation of Success is All that is Required

> *"[W]e do not hold that '**absolute predictability**' or '**guaranteed success**' is required to find a reasonable expectation of success. To be sure, we have **repeatedly rejected that notion.**"*
>
> *Univ. of Strathclyde v. Clear-Vue Lighting LLC,* 17 F.4th 155(Fed. Cir. 2021)
> (citations omitted and emphasis added)

'722	'829
'830	'910

Reply to POR '722, 5-6; Reply to POR '829, 5; Reply to POR '830, 5; Reply to POR '910, 5

Yoakim Describe Common Features Shared Across Embodiments

[0128] The capsule can comprise a sealing lid. The sealing lid can comprise a flexible membrane. The membrane can comprise gas barrier and support layers made of polymers, aluminium and/or aluminium alloys.

[0129] The capsule can also comprise a cup-shaped body onto which the sealing lid is sealed. The cup-shaped body may also comprise gas barrier materials, such as metal, e.g., thin aluminium and/or plastic.

[0162] In an aspect of the invention, the capsule comprises opening means for letting the brewed liquid leave the capsule, wherein the opening means opens under the effect of the fluid being moved by the centrifugal forces when the capsule is driven in rotation.

[0163] For instance, the opening means forms at least one radial outlet for the brewed liquid.

EX1004, [0128]-[0129]&[0162]-[0163]

Capsule features common across embodiments include:

- Cup-shaped body
- Flange
- Gas-barrier layers
- Membrane/lid
- Water inlet
- Areas for sealing and piercing for brewed liquid exit

’722	’829
’830	’910

Reply to POR ’722, 4 ; Reply to POR ’829, 4; Reply to POR ’830, 4; Reply to POR ’910, 4
ID ‘722, 24, 33, 40; ID ‘829, 22, 31-34, 44-45; ID ‘830, 34, 39-40, 42-44; ID ‘910, 25, 41-46, 50-51

IPR2024-00299
Nespresso USA, Inc. Ex. 1075
Page 110 of 265

Yoakim's Describes its Capsules in General Terms Before Presenting Different Specific Capsule Arrangements

[0014] The invention relates to a capsule, device, system and method for preparing a liquid food or beverage. The capsule comprises an enclosure containing one or more extractable or infusible ingredients and configured and dimensioned to have a perimeter and be radially symmetrical about a central axis to facilitate rotation; and an opening means or arrangement that allows liquid food to leave the capsule after passing through the ingredient(s), wherein the opening means or arrangement is configured and positioned near or upon the perimeter of the enclosure to allow the liquid food to leave the capsule radially due to the application of the

[0015] The enclosure generally includes a top, bottom and side wall and the opening means or arrangement comprising one or more outlet openings located in the top or the side wall near or upon the perimeter of the enclosure, with the opening (s) either being (a) initially present in the enclosure along with a gas-tight covering or (b) formed by centrifugal forces during preparation of the liquid food after injection of the liquid into the capsule by movement of the liquid food to exert a flexure on at least one deflectable portion of the capsule, with the deflectable portion including an elastic lip acting in closure on the side wall of the capsule or inserted in a peripheral cavity of the enclosure.

EX1004, [0014]-[0015]

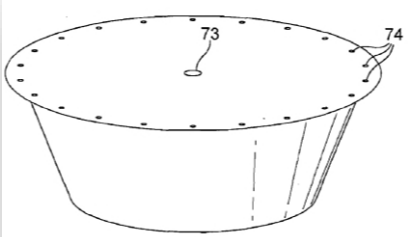

FIG. 7

EX1004, FIG. 7

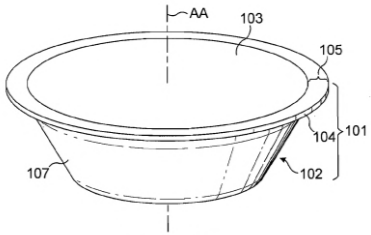

FIG. 26

EX1004, FIG. 26

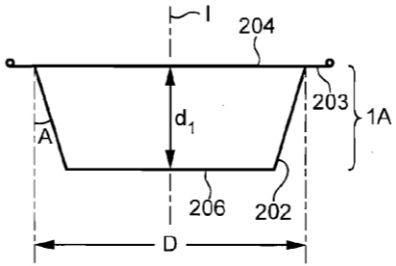

FIG. 51

EX1004, FIG. 51

'722	'829
'830	'910

Reply to POR '722, 4 ; Reply to POR '829, 4; Reply to POR '830, 4; Reply to POR '910, 4

K-fee's Lack of Motivation Arguments Regarding Yoakim Device Differences Are Irrelevant to the '910 and '830 IPRs

'830 Patent

Claims 1/8: **A portion capsule** for making a beverage comprising…

EX1001 '830 claims 1 & 8

'910 Patent

Claims 1/8: **A portion capsule** for making a beverage and having…

EX1001 '910, claims 1 & 8

'830 '910

Reply to POR '830, 4; Reply to POR '910, 4

IPR2024-00299
Nespresso USA, Inc. Ex. 1075
Page 112 of 265

Yoakim Also Describes Machine Features Generally and Not Linked to a Specific Embodiment

[0180] The system **1** of the invention is illustrated in FIG. **1** in the more general sense. The system comprises a device **2** and a capsule **3**. The device has a brewing module **4** into which the capsule can be inserted for being brewed and is removed after use for being discarded (e.g., for waste or recycling). The module is in fluid communication with a water reservoir **5** containing fresh or, alternatively heated water. A fluid transport means such as a low pressure pump **6** can be provided in the water circuit to transport water from the reservoir to the module. A water heater **7** is further provided to heat water to the desired temperature. It can be noted that water could be heated in the reservoir itself and water could be transported from the reservoir by effect of vaporisation. Water can be fed into the module **4** at low or substantially no pressure. For example, a pressure between 0 and 2 bars above atmospheric pressure can be envisaged at the inlet **8** of the module.

[0020] The device of the invention conveniently prepares the liquid food from any of the capsules disclosed herein that contain one or more extractable or infusible ingredients. The device comprises means for receiving the capsule; means for introducing a liquid into the capsule; and means for centrifugally rotating the capsule about an axis of rotation. The cap-

EX1004, [0180], [0020]

[0022] The device advantageously includes a control unit adapted to vary the speed of the centrifugal rotation means for rotating the capsule at at least two different centrifugal speeds to provide different centrifugal pressures of water in the capsule, wherein the liquid introducing means is operatively associated with a pump and injection tube connected to a reservoir for injection of the liquid into the capsule under the effect of rotational momentum. The centrifugal rotating means generally comprises an electrical motor and drive shaft operatively associated with the capsule holder for rotating the capsule holder about the axis of rotation. If desired, the device can include a collector for collecting the liquid food, the collector including a by-pass conduit arranged to add water into the collector without passing into the capsule.

[0023] The device itself, rather than the capsule, can include flow restriction means arranged in the flow path of the liquid food for providing a pressure drop of at least 0.5 to 6 bar of relative pressure during the centrifugal rotation of the capsule to enable the liquid to have a higher residence time in contact with the extractable or infusible ingredient(s) in the capsule. The flow restriction means generally comprises a valve which is arranged in the flow path adjacent an outlet of the capsule, wherein the valve makes, opens or enlarges a

EX1004, [0022]-[0023]

’722	’829
’830	’910

Reply to POR ’722, 4 ; Reply to POR ’829, 4; Reply to POR ’830, 4; Reply to POR ’910, 4

IPR2024-00299
Nespresso USA, Inc. Ex. 1075
Page 113 of 265

Despite K-fee's Contention Otherwise, Yoakim's Identification Means is Not Limited to the Embodiment of Figures 61-62

[0010] Therefore, there is a need for proposing a new extraction process and a capsule adapted therefore for which the extraction parameters can be better and more independently controlled and therefore can be better mastered for controlling quality of the final brewed beverage or food liquid product.

[0025] The device is useful for preparing beverages from a plurality of different capsules, in which case it further comprises identification means for identifying the different capsules, and control means capable of operating the device in centrifugation for any of the different capsules according to predetermined liquid food preparation parameters including the flow rate and the volume of liquid to be injected into the capsule, with the identification means comprising capsule recognition means which are recognized by sensing means connected to the control means of the device to control the preparation parameters accordingly.

EX1004, [0010], [0025]

[0521] The system of the invention advantageously comprises an identification means ID**1**, ID**2**, ID**3** (FIGS. **54** and **55**) or ID**4**, ID**5** (FIGS. **61** and **62**) associable to each capsule to ensure control of the brewing parameters, in particular, the flow rate and the volume of injected liquid in the capsule, as a function of the volume of the capsule and/or the product characteristics of the capsule (granulometry, roasting, etc.) and/or the beverage to be delivered (ristretto, espresso, lungo, etc.). The system of the invention is capable of delivering different flow rates which are influenced by two key parameters: the rotational speed of the capsule in the device and the back-pressure exerted on the centrifuged liquid. For a given back-pressure, the higher the rotational speed, the larger the flow. Conversely, for a given rotational speed, the larger the back-pressure, the smaller the flow. The back-pressure can be varied by varying the closing force of a flow restriction valve placed downstream of the enclosure of the capsule and/or by

EX1004, [0521]

'722	'829
'830	'910

Reply to POR '722, 4 ; Reply to POR '829, 4 ; Reply to POR '830, 4 ; Reply to POR '910, 4

IPR2024-00299
Nespresso USA, Inc. Ex. 1075
Page 114 of 265

Glucksman Cannot Describe So-Called "Five Embodiments"

Q And my question from before is the same, which is, specifically, what are the five separate embodiments that you contend are being combined by the petitioner in Yoakim?

A I'm having a little difficulty in equating my statement of five different embodiments with my -- you know, presently reviewing the figures at this point here.

[...]

A So I reviewed my declaration all the way to paragraph -- to my paragraph 87. I don't find that I outline, specifically, what these five different embodiments were.

EX1071, 115:20-116:20

'722	'829
'830	'910

Reply to POR '722, 4; Reply to POR '829, 4; Reply to POR '830, 4; Reply to POR '910, 3

Yoakim's Disclosure Is Far Clearer Than K-fee's

Laboratory Model?

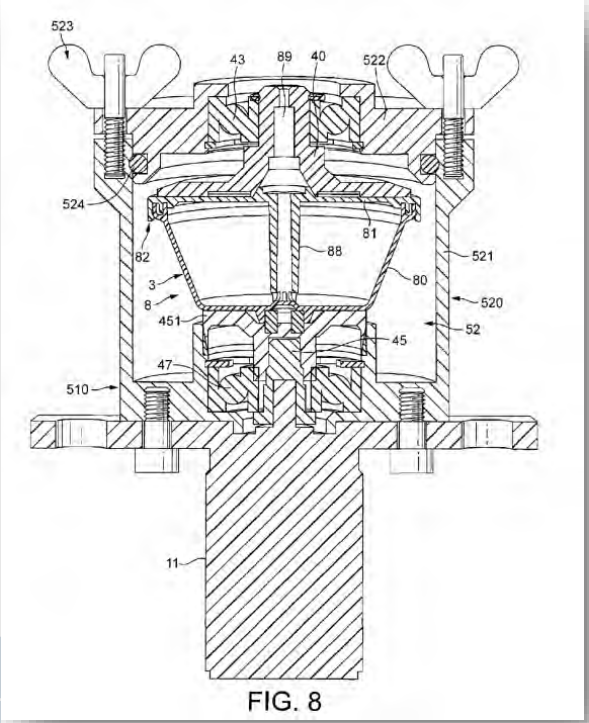

EX1004, Fig. 8

???

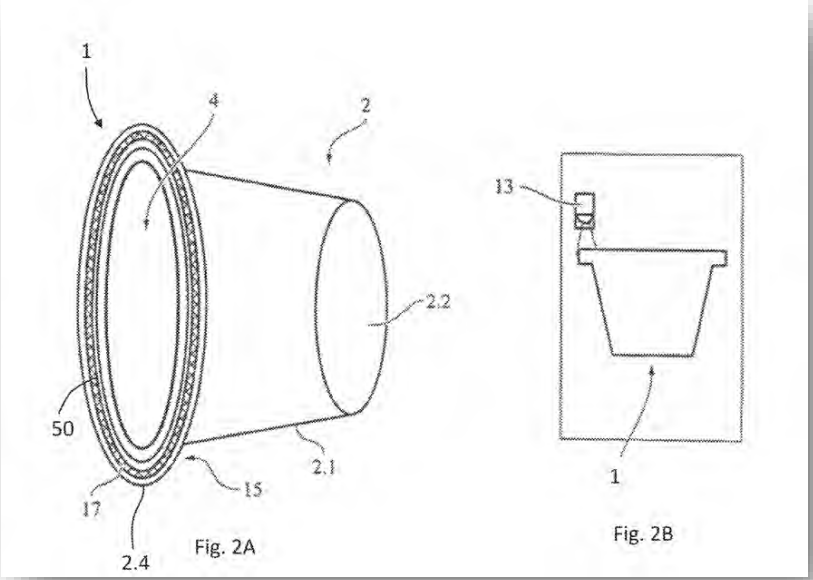

EX1001, Fig. 2
(same for all IPRs)

'722	'829
'830	'910

Reply to POR '722, 5-6; Reply to POR '829, 5; Reply to POR '830, 5; Reply to POR '910, 5

IPR2024-00299
Nespresso USA, Inc. Ex. 1075
Page 116 of 265

Flow Restriction Means Applies Broadly Across Embodiments

[0369] According to an important aspect of the invention, a flow restriction within the flow path of the centrifuged liquid enables to control the release of the centrifuged liquid for improving the interaction of water with the substance within the capsule as well as providing eventually foam to the liquid by the pressure release and the shear stresses which are created at the restriction. More particularly, the flow restriction means enables to maintain a pressure of several bars at the periphery of the enclosure and so retards the release of the liquid.

[0370] In a possible mode, the device comprises a flow restriction means which is arranged after the outlet(s) of the capsule.

EX1004, [0369]-[0370]

[0372] In a preferred mode, the flow restriction means of the device comprises a valve means which opens or enlarge a liquid passage when a sufficient pressure of the centrifuged liquid is exerted on the valve means so that the liquid can release from the capsule out of the device.

EX1004, [0372]

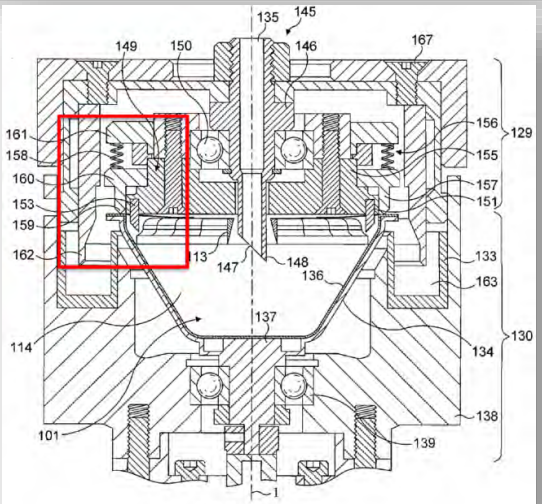

FIG. 35

EX1004, Fig

’722	’829
’830	’910

Reply to POR ’722, 7-8; Reply to POR ’829, 7-8; Re

The Petitions Clearly Explain Why a POSITA Would Be Motivated to Use This Type of Valve/Seal

It would also have been obvious to a POSITA to utilize the claimed seal configuration in the brewing head of the centrifugal brewing unit in order to achieve "the advantage of a control of the pressure of liquid exerted in the capsule at the level of the device," as well as "optimize interaction of water and the ground coffee particles to obtain a good extraction of the coffee and aroma compounds," and "improve the creation of foam or coffee crema." EX1004, [0384]-[0385]; EX1003, ¶342.

Pet. '910, 67
See also Pet. '722, 64-68; Pet. '829, 59-62; Pet. '830, 67-69

'722	'829
'830	'910

Reply to POR '722, 9; Reply to POR '829, [illegible]; Reply to POR '910, 8

Yoakim's Identifier/Multi-Volume Disclosure Teaches a Valve/Seal Configuration

[0506] The capsules **1**A, **1**B are indented to be inserted in the centrifuge brewing device **207** (FIGS. **54** and **55**). As illustrated in FIG. **54**, the device comprises a brewing unit **800** fed with heated liquid, preferably hot water, by a fluid circuit **209** comprising a heater **210**, a pump **211** for metering liquid in the capsule and a liquid supply, e.g., a water reservoir **212**. The brewing unit comprises an interface assembly **213**, a capsule holder **214** and a collector **215**. A peripheral outlet **29**, forming a flow restriction for the centrifuged liquid, is provided, at the periphery of the capsule, e.g., between the interface assembly **213** and the capsule holder or capsule **206**. A flow restriction can be formed by a spring-biased valve situated at and acting on the rim of the capsule as described above. Part of the valve can be formed by the capsule itself as described in co-pending European patent No. 08171069.1. Such flow restrictions provide a back-pressure on the centrifuged liquid. The collector terminates by a beverage outlet **216** such as formed as an open duct directed to the cup. The capsule holder **214** is designed with portion **224** forming a support surface **218** that is complementary shaped to the upper body portion of the capsules **1**A, **1**B.

EX1004, [0506]

capsule. Such restriction can be obtained by small orifices or a restriction valve such as described in above.

EX1004, [0507]

'722	'829
'830	'910

Reply to POR '722, 7-8; Reply to POR '829, 7-8; Reply to POR '830, 7-8; Reply to POR '910, 6-7

K-fee Ignores the Petition's Mapping

- The Petitions never rely on Figs. 8-9 to meet a limitation
- The Petitions never rely only on the capsule depicted in Fig. 23 to meet any limitation.
- The '830 Patent claims do not require indentations of any particular size and the Petition relies on Yoakim's slits, pins or small.

Yoakim further discloses that "the teeth could be replaced by other equivalent structures such as series of elements in relief and/or hollow. For example, slits, pins or small needles can be envisaged." EX1004, [0215]. Such relief structures, in particular slits, pins or small needles, would likewise constitute indentations arranged about the central longitudinal axis of the outside surface of the wall.

Pet. '830, 52

'722	'829
'830	'910

Pet. '830, 6

No Inconsistent Prosecution Statements

Yoakim's statement:

The secondary reference *Yoakim I* teaches an annular engaging portion 57 that comprises a pressing surface 59 applying a closing force on the peripheral rim 4 of the capsule to be able to restrict the flow of liquid. See *Yoakim I*, page 14, second full paragraph. Increased pressure of liquid on the internal surface of the pressing surface 59 can lift the pressing surface 59 to create a small passage for the liquid. See *Yoakim I*, page 17, first full paragraph. Nevertheless, *Yoakim I* does not even suggest a plate that is pressed to engage the pressing surface portion with the force-setting portion.

POR '910, 17
See also POR '722, 15-16; POR '829, 15-16; POR '830, 16-17

K-fee failed to:

- Argue estoppel
- Analyze rejection
- Compare the pending claims.

'722	'829
'830	'910

Reply to POR '722, 9; Reply to POR '829, 9; Reply to POR '830, 9; Reply to POR '910, 8

A POSITA Would Have Combined Castellani with Yoakim and Jarisch(929)

’722 and ’829 Patents

DEMONSTRATIVE – NOT AN EXHIBIT

Castellani Provides Express Motivations to Use its Capsule Ejection System with Yoakim and Jarisch(929)'s System

[0010] Within the scope of the above mentioned aim, a main object of the invention is to provide such a delivery head, in which the single-use or disposable capsule loading and unloading operations can be performed in a very easy and safe manner, from a user standpoint.

EX1009, [0010]
See also [0007]-[0009]

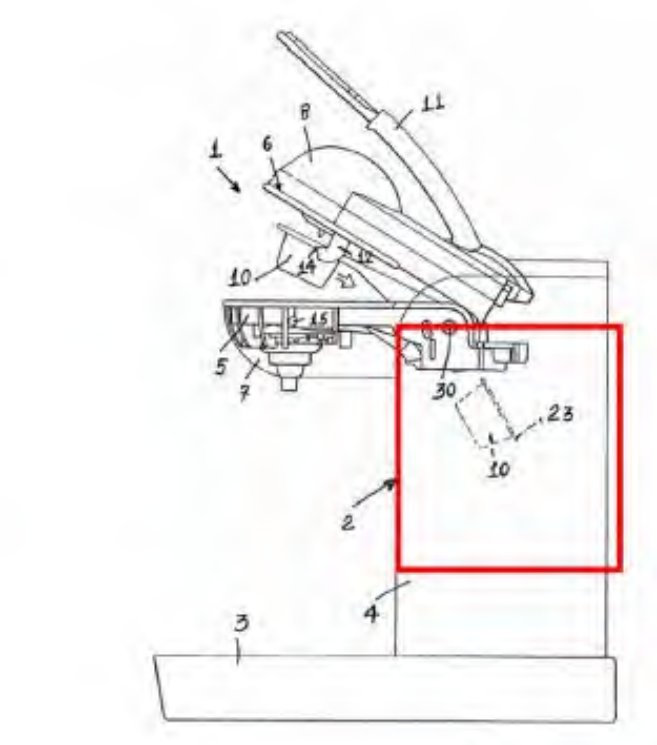

'722	'829

Expectation of Success – Castellani is Directed to Single-Serve Capsule Coffee Machines

[0012] According to one aspect of the present invention, the above mentioned aim and objects, as well as yet other objects, which will become more apparent hereinafter, are achieved by a delivery head for espresso coffee machines, characterized in that said delivery head comprises a top supporting element pivoted to a bottom supporting element, said bottom supporting element being made rigid with a body of said machine; said bottom supporting element comprising an infusion recess, designed for receiving a coffee holding capsule; said delivery head further comprises an operating lever which operates at least one of said support elements to define at least an open capsule loading and unloading position, and a coffee delivery closed position, said head further including perforating means for progressively perforating said capsule and capsule ejecting means.

EX1009, [0012]

’722	’829

Expectation of Success – Castellani's System is Structurally Compatible with Yoakim's

Yoakim	Castellani
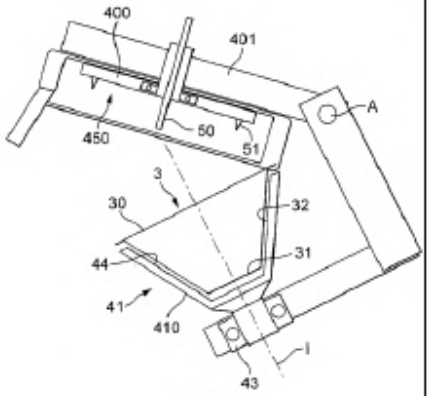	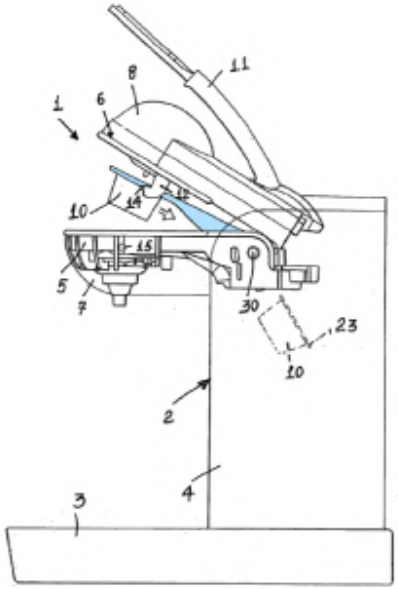
FIG. 2	FIG. 7
EX1004, Fig. 2	EX1009, Fig. 7

'722	'829

K-fee Argues Castellani's Arms Obstruct Code Reading and Rotation

Castellani's fork element is not suitable for use in combination with Yoakim and Jarisch due to obstruction of the code on the bottom of the flange and resulting interference with reading the code on the bottom of the flange. Ex.1009, [0054], Figs. 2, 7, 11. Accordingly, a POSITA would not have looked to Castellani's

POR '829, 41
See also POR '722, 46

However, Figs. 2, 7 and 11 of Castellani depict the delivery head in an ***open, ejecting*** position

'722	'829

Open Position: Castellani's Arms Contact the Capsule's Rim

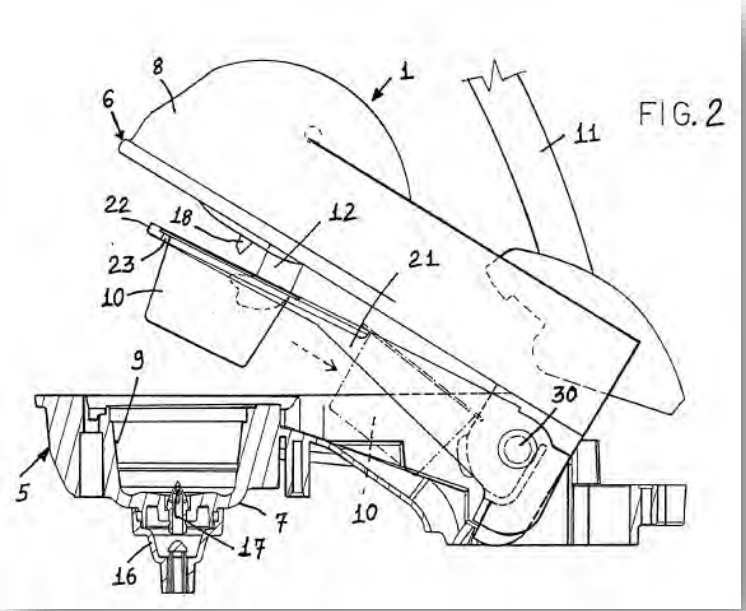

EX1009, Fig. 2

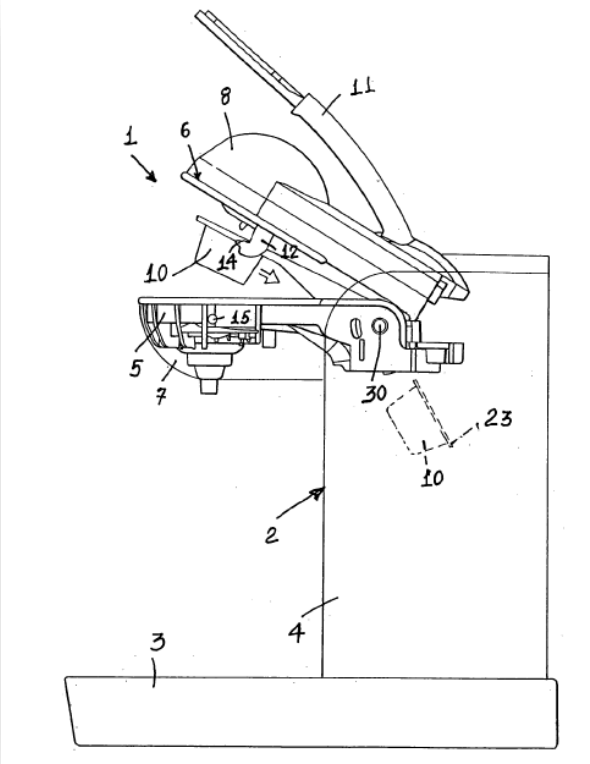

EX1009, Fig. 7

'722	'829

Reply to POR '722, 21; Reply to POR '829, 18

Closed Position: Castellani's Arms Are Behind the Capsule Holder and Below the Rim

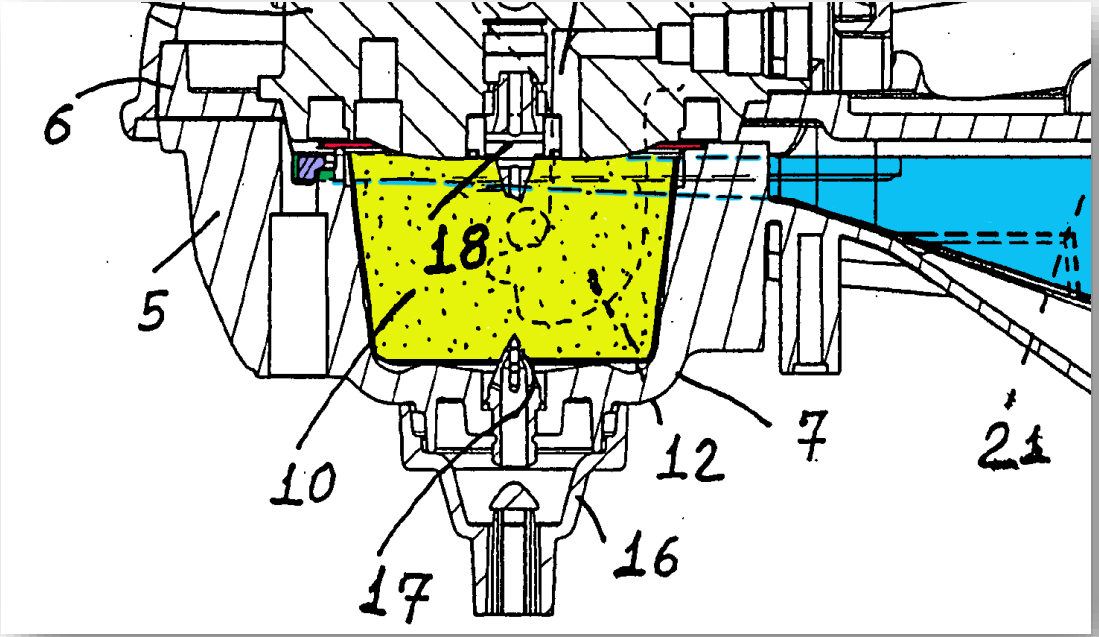

EX1009, Fig. 1 (annotated)

Rim (red)
Holding arms (blue)
Space below the rim (purple)

'722	'829

IPR2024-00299
Nespresso USA, Inc. Ex. 1075
Page 128 of 265

Jobin Explained that Castellani's Arms Fall Away from the Rim When the Lid is Closed

Q. So if I understand your opinions correctly, when the lid is closed on the machine, the annular portion and fork elements are under the rim of the capsule, but not touching it?

EX2025, 65:12-16

A. That's -- what I see in Figure 1 is that you've got a section view that calls out 21, which is the -- I'm identifying in this analysis as a -- as one of the holding arms. The other one, of course, would be on the other side of the cutting plane from the viewer's perspective.

You can see that horizontal line of the holding arm transitioning to dashed lines when it goes behind the brewing chamber, and that dashed line is distinct and separate. It's below the rim of the capsule. So it's touching the capsule as it's dropping in, and then when it comes to its rest position, the capsule is supported by the receptacle and pinched on top for sealing.

EX2025, 65:19-66:10

'722	'829

After the Brewing Process is Over, Castellani's Holding Arms Re-engage the Capsule Rim and Guide it into the Waste Container

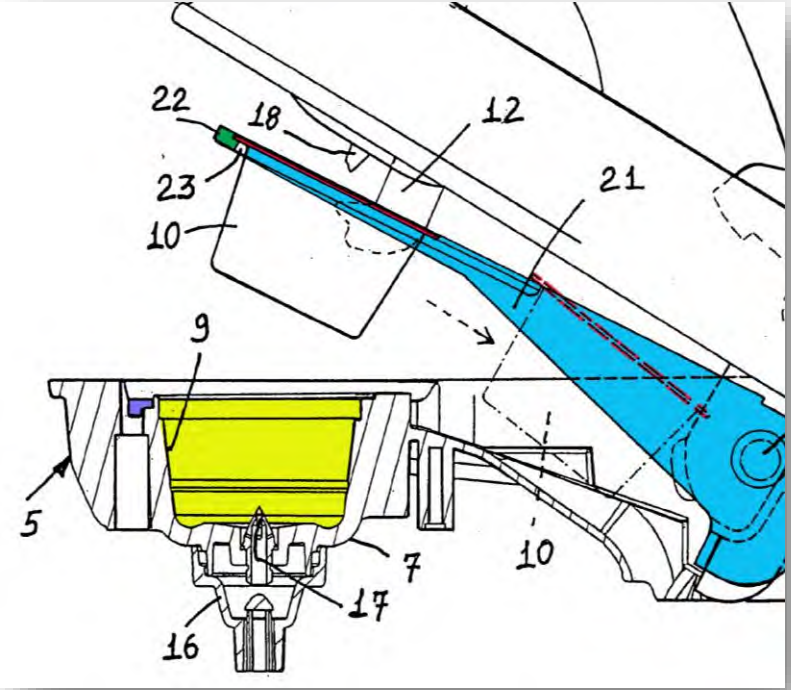

EX1009, Fig. 2 (annotated)

'722	'829

Jarisch(929)'s System Reads the Code in a Closed Position

Jarisch (929)'s code is read while in rotation (i.e., in a closed position)

Repetition of the code means that the same code is duplicated and the successive codes are positioned in series along the circumference so that upon a 360-degree rotation of the capsule, the same code can be detected or read more than one time.

EX1005, [0039]

[0089] As the capsule is rotated (FIG. **4**), the light beam **63** touches another symbol represented by a diffuse reflecting surface (surface between the small rectangles) and is partially reflected to the sensor. A reflective beam **66** is received by the

EX1006, [0089]
See also [0095]

'722	'829

Reply to PR 1-23, 1-25, Reply to PR 1-26, 18-20

131 | DEMONSTRATIVE – NOT AN EXHIBIT

IPR2024-00299
Nespresso USA, Inc. Ex. 1075
Page 131 of 265

A Portion of the Rim Will Always Remain Unobstructed

Castellani's holding arms are U-shaped

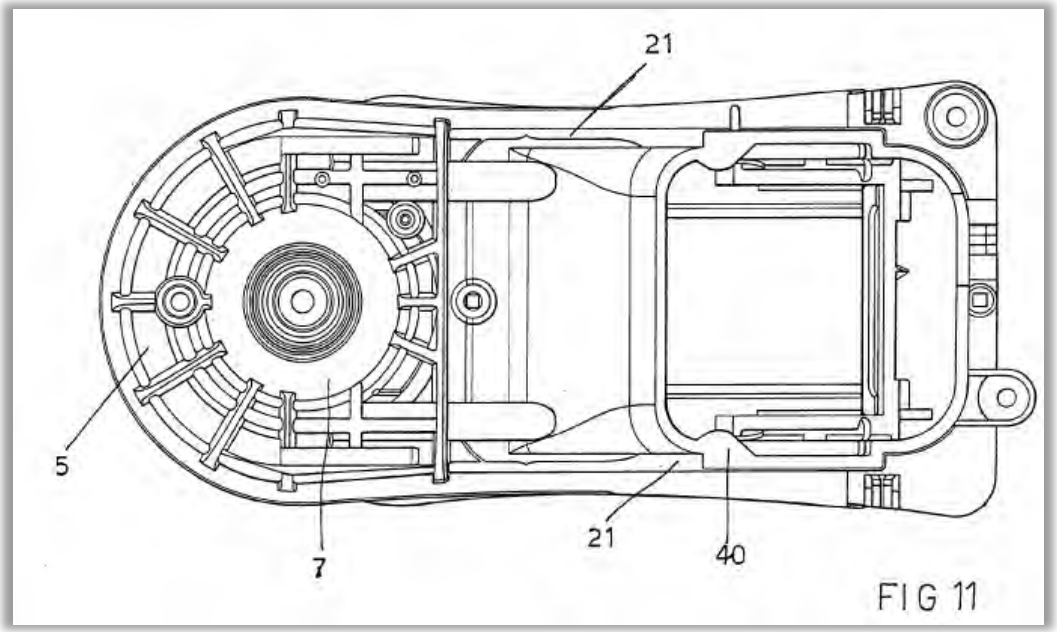

EX1009, Fig. 11

'722	'829

Reply to POR '722, 21-23; Reply to POR '829, 18-20

Jobin: Holding Arms Are Not in Contact With Rim During Rotation

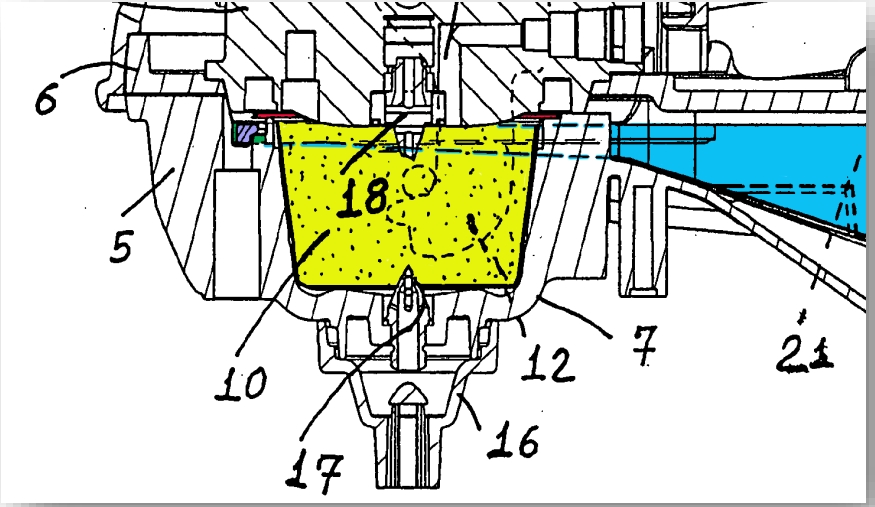

EX1009, Fig. 1 (annotated)

Rim (red)
Holding arms (blue)
Space below the rim (purple)

’722	’829

And what you see here is the brewing position, and so we have a capsule, which is very similar to the capsule in Yoakim. It's got a cup-shaped body. It's got a flange. It's got a membrane sealing the top, and it's being pierced in the top in a very similar manner, and what you see is is that the brewing chamber is pinching the flange on the top and the bottom in order to seal the capsule and hold it into position during brewing, and you can see the little crosshatched holding arm element, and in dashed lines, which is indicating behind the capsule, the holding arm is depicted below the rim of the capsule. So it's clearing it during the brewing process, and then it's coming back up and lifting it out after the brewing process.

EX2025, 62:8-25

Reply to POR ’722, 21-22; Reply to POR ’829, 18-19

Jobin's Testimony

Q. Would it be beneficial if I took a stick and held it against the brewing chamber while it was rotating?

A. Well, I'm not sure that that would make sense, no. Holding a stick for anything against the spinning capsule or the spinning brewing chamber, I mean, you'd want to have a little bit of clearance of this so that it could spin freely.

EX2025, 44:11-20 (objection omitted), cited in POR '722, 50; POR '829, 45

'722	'829

Reply to POR '722, 21; Reply to POR '829, 18

A POSITA Would Have Combined Rapparini with Yoakim and Jarisch(929)

’722, ’830, and ’910 Patents

DEMONSTRATIVE – NOT AN EXHIBIT

Rapparini's Invention Is to Be Used with Espresso Machines

[0019] According to a further embodiment of the present invention, a container is provided, wherein the container is adapted to be employed in automatic espresso machines. In particular, the container can be adapted to be employed for example for automatic domestic espresso machines or for industrial espresso machines.

EX1008, [0019]

[0067] For instance, several kinds of materials can be employed for realizing the containers according to the present invention. Moreover, the containers according to the present invention can have several dimensions. For example, the containers can be adapted to be employed for domestic machines such as moka pots or automatic espresso machines. Alternatively, the containers can be adapted to be employed for industrial machines.

EX1008, [0067]

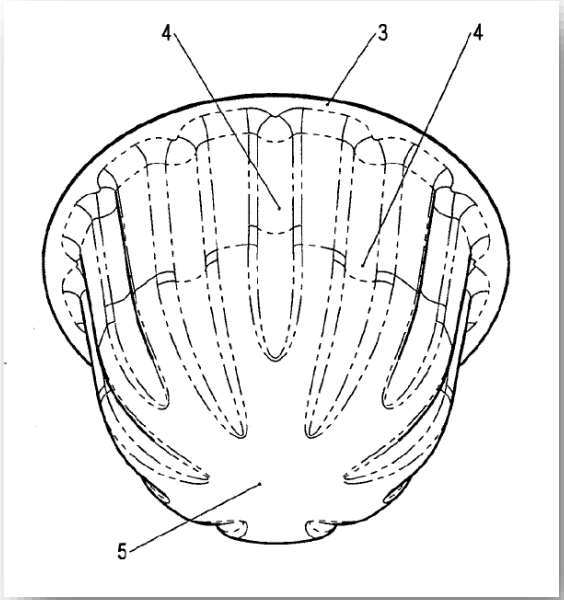

EX1008, Fig. 6bis

'722	
'830	'910

Pet. '722, 42; Pet. '830, 74; Pet. '910, 43; Reply to POR '722, 19; Reply to POR '830, 17; Reply to POR '910, 17

Rapparini Discloses Similarly-Shaped Capsules to Those Disclosed in Jarisch/Jarisch 929 and Yoakim

Yoakim	Jarisch 929	Rapparini
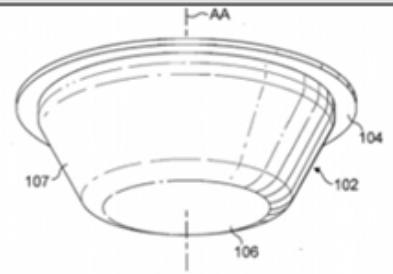	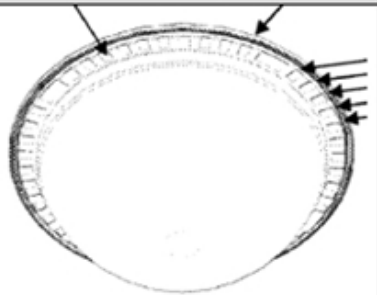	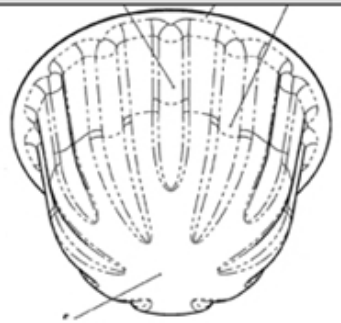

FIG. 27

EX1003 '910, ¶237
See also EX1003 '722, ¶227; EX1003 '830, ¶342

'722	
'830	'910

Yoakim's and Jarisch/Jarisch 929's Capsules Benefit from the Advantages Provided by Rapparini's Grooves

Rapparini

[0007] The present invention allows overcoming the problems and drawbacks of the systems known in the prior art. In particular, the present invention guarantees stability of the structure of filtering and permeable containers so that they can easily be handled in packaging and/or filling machines even when these machines operate at very high rates. Moreover, the present invention provides containers which are easily employed in automatic machines both for domestic and industrial use.

EX1008, [0007]

[0009] The present invention is based on the idea of providing the body of the container with longitudinal stiffening ribs wherein the length of the ribs is variable along the surface of the body. The presence of ribs having different lengths on the body of the container allows the optimization of the stability of the container. The modulation of the length of the ribs along the surface of the container allows improving the stability and rigidity of the system.

EX1008, [0009]

Jobin

234. Rapparini is also analogous art to Yoakim, Jarisch 929, and Rossi. Rapparini also attempts to solve problems relating to portion capsule brewing, in particular increasing the strength and stability of the body of thin-walled beverage extract containers, like those used in Yoakim, Jarisch 929, and Rossi.

EX1003 '910, ¶234
See also EX1003 '722, ¶223; EX1003 '830, ¶338

'722	
'830	'910

Reply to POR '722, 19-20; Reply [illegible] 18

Strengthening Thin-Walled Capsules with Grooves and Ribs Was Known

EX1035:

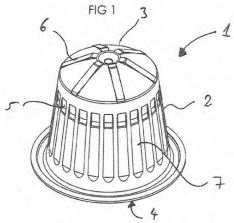

[0027] 7. side wall stiffening element

EX1031:

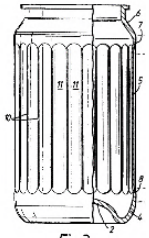
Fig.3.

axial load. It has been found that the provision of a plurality of parallel longitudinally extending outwardly convex ribs in the central portion of the can body will reduce or eliminate the effect of such dents and give axial strength to the can. It has also been found that the

EX1032:

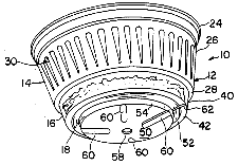

The wall **26** is cylindrical and is stepped and tapered inwardly and includes vertical ribs **30** for strengthening. The bottom wall **28**, in the illustrative embodiment, is in the form of an annular shoulder and includes a relatively large central opening **32**. As illustrated, the reser-

EX1035, [0027], Fig. 1; EX1031, 1:27-37, Fig. 3; EX1032, 5:15-19, Fig. 1

'722

'830 '910

Pet. '722, 4-6 & 12; Pet. '830, 3-7 & 74; Pet. '910, 4-6 & 43

IPR2024-00299
Nespresso USA, Inc. Ex. 1075
Page 139 of 265

K-fee's Inconsistent Positions

Accordingly, a POSITA would not have looked to Rapparini's permeable containers to modify Yoakim's sealed capsules. Indeed, Rapparini on its face is directed to "the field of filtering and permeable containers" (Ex.1008, [0001]), which Yoakim and Jarisch are not. *See* Ex.1004, [0027], [0096], [0110], [0129];

POR '830, 46
See also POR '722, 42-43; POR '910, 45-46

Yoakim expressly teaches using a filter inside the cavity for the purpose of filtering the brewed liquid from the solid particles in the capsule. *See, e.g.*, Ex.1004,

POR '830, 54
See also POR '722, 62; POR '910, 48

[9] Yoakim is within International Classification "A47J 31/44," entitled "Parts or details {or accessories} of beverage-making apparatus (***filters or strainers*** A47J 31/06)" Ex.2009, 4, and International Classification "A23F 5/26," entitled

POR '830, 54 fn. 9
See also POR '722, 63 fn. 9; POR '910, 48 fn. 8

'722	
'830	'910

Reply to POR '722, 19; Reply to POR '910, 17

IPR2024-00299
Nespresso USA, Inc. Ex. 1075
Page 140 of 265

Rapparini Is Not Limited to Permeable Materials

Rapparini

[0067] For instance, several kinds of materials can be employed for realizing the containers according to the present invention. Moreover, the containers according to the present invention can have several dimensions. For example, the containers can be adapted to be employed for domestic machines such as moka pots or automatic espresso machines. Alternatively, the containers can be adapted to be employed for industrial machines.

EX1008, [0067]

Yoakim

[0237] The device of the invention may receive capsules made of rigid, semi-rigid and/or soft materials. The capsule may be made of materials such as plastics, aluminium, cellulose-based materials or other biodegradable materials, and combinations therefore. Preferably, the capsule has a peripheral wall made of a pierceable membrane. The membrane can form a sealing lid covering a cup-shaped body which receives the food substance to be brewed.

EX1004, [0237]

’722

’830 ’910

Pet. ’722, 42; Pet. ’830, 74; Pet. ’910, 43; Reply to POR ’722, 19; Reply to POR ’830, 19; Reply to POR ’910, 15-18

IPR2024-00299
Nespresso USA, Inc. Ex. 1075
Page 141 of 265

A POSITA Would Find It Obvious to Also Apply Rapparini's Invention to Impermeable Capsules

Jobin:

Q. Right, but does Rapparini teach a container that is nonpermeable?

A. One of ordinary skill understands this reference to -- to -- to cover both types of containers. It talks about sealing a container. It talks about piercing it. I'm just looking at different figures here, and it's pretty clear, it says: Hermetic and impermeable capsule 10. That's disclosed in this reference and certainly something that I would have formed my understanding of how this works.

EX2025, 112:10-22

'722	
'830	'910

Reply to POR '722, 19; Reply to POR '830, 19; Reply to '910, 17-18

The Petition Never Argued for Bodily Incorporation of Rapparini's Material into Yoakim's Capsule

It would therefore be obvious to a POSITA to combine the brewing/capsule system of Yoakim, the optically detectable identifier located on the bottom side of the flange in Jarisch 929, the machine operation and activation control as disclosed in Rossi, and the ribs and grooves of Rapparini. EX1003, ¶229.

Pet. '722, 43
See also Pet. '830, 76; Pet. '910, 44

'722	
'830	'910

Reply to POR '722, 19; R[illegible] 18

IPR2024-00299
Nespresso USA, Inc. Ex. 1075
Page 143 of 265

Yoakim Discloses Plastic Capsules Applicable to Thermoforming

Yoakim discloses capsules made of plastic, suitable for thermoforming, or made of aluminum using the similar deep drawing process

[0237] The device of the invention may receive capsules made of rigid, semi-rigid and/or soft materials. The capsule may be made of materials such as plastics, aluminium, cellulose-based materials or other biodegradable materials, and combinations therefore. Preferably, the capsule has a peripheral wall made of a pierceable membrane. The membrane can form a sealing lid covering a cup-shaped body which receives the food substance to be brewed.

EX1004, [0237]

[0215] FIG. **23** illustrates another capsule of the invention. The capsule comprises means for connecting it to the external rotational driving means of the device. For this, capsule has a toothed structure **75** on at least one of its outer surface. The capsule has a body **70** comprising an upper edge **72** which can be closed by an upper membrane **71**. The toothed structure comprises a series of teeth which is positioned below the edge or rim **72** of the body of the capsule. The teeth are placed along the whole periphery of the body of the capsule. The body of the capsule can be made of plastic and/or aluminium or aluminium alloy. For example, it can be moulded by injection of plastic or deep drawn in aluminium. For example, the shape of the teeth could be slightly triangular, oval, rectangular or pyramidal. It should be noticed that the teeth could be replaced by other equivalent structures such as series of elements in relief and/or hollow. For example, slits, pins or small needles can be envisaged.

EX1004, [0215]

’722	
’830	’910

Pet. ’722, 43; Pet. ’830, 75-76; Pet. ’910, 44; Reply to POR ’722, 19-20; Reply to POR ’830, 19-20; Reply to POR ’910, 17-18

IPR2024-00299
Nespresso USA, Inc. Ex. 1075
Page 144 of 265

Expectation of Success – Yoakim Contemplates a Capsule With a Textured Body

[0215] FIG. **23** illustrates another capsule of the invention. The capsule comprises means for connecting it to the external rotational driving means of the device. For this, capsule has a toothed structure **75** on at least one of its outer surface. The capsule has a body **70** comprising an upper edge **72** which can be closed by an upper membrane **71**. The toothed structure comprises a series of teeth which is positioned below the edge or rim **72** of the body of the capsule. The teeth are placed along the whole periphery of the body of the capsule. The body of the capsule can be made of plastic and/or aluminium or aluminium alloy. For example, it can be moulded by injection of plastic or deep drawn in aluminium. For example, the shape of the teeth could be slightly triangular, oval, rectangular or pyramidal. It should be noticed that the teeth could be replaced by other equivalent structures such as series of elements in relief and/or hollow. For example, slits, pins or small needles can be envisaged.

EX1004, [0215]

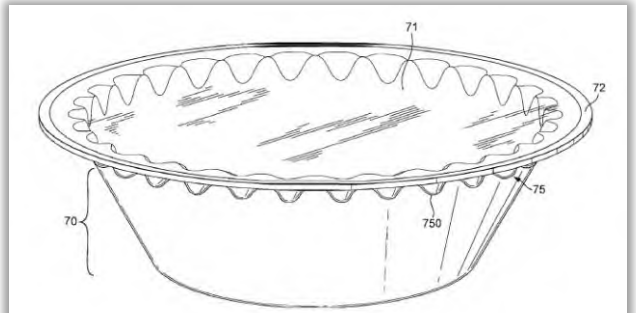

FIG. 23

EX1004, Fig. 23

’722	
’830	’910

Pet. ’722, 43; Pet. ’830, 75; Pet. ’910, 44; Reply to POR ’722, 6; Reply to POR ’830, 6; Reply to POR ’910, 5

Expectation of Success – Rapparini's Capsules and Yoakim's Capsules Are Made by Similar Processes

228. A person of ordinary skill in the art would also have had an expectation of success because the capsule of Rapparini is manufactured using a thermoforming process that involves using a die to punch a sheet of permeable material into the shaped capsule. Yoakim explicitly discloses that its capsule can be made of aluminum, which is known to typically be formed by deep-drawing, and is a similar process to thermoforming (albeit without heat) that involves using a die to punch a sheet of aluminum into a shaped capsule. Ex. 1004, at [0215].

EX1003 '722, ¶228
See also EX1003 '830, ¶343; EX1003 '910, ¶238

[0010] According to an embodiment of the present invention, a filtering and permeable container for substances suitable for the preparation of beverages is provided, the container being made by means of thermoforming starting from a flat strip of permeable, filtering and thermoformable material, wherein the body of the container comprises longitudinal stiffening ribs, wherein the length of the ribs is variable along the surface of the body.

EX1008, [0010]

along the whole periphery of the body of the capsule. The body of the capsule can be made of plastic and/or aluminium or aluminium alloy. For example, it can be moulded by injection of plastic or deep drawn in aluminium. For example, the shape of the teeth could be slightly triangular, oval, rectangular or pyramidal. It should be noticed that the teeth could be replaced by other equivalent structures such as series of elements in relief and/or hollow. For example, slits, pins or small needles can be envisaged.

EX1004, [0215]

'722	
'830	'910

Pet. '722, 25-26 & 43 (citing EX1003 '722, ¶204); Pet. '830, 27-28 & 75-76 (citing EX1003 '830, ¶199); Pet. [illegible] (citing EX1003 '910, ¶212)

Jobin Testified That Thermoforming and Deep Drawing Are Similar Processes

Q. What are examples of thermoformable materials?

A. Well, in this case, a thermoformable material is a thin -- it could be a thin plastic material. It could be a thinner nonwoven material or permeable material. It could be nonpermeable plastic film or sheet.

Generally something that can be heated and formed into a die to create this cup shape is what is generally understood, and what I have done is also observed the thermoforming and deep drawing have similarities in that they both use a matched die and that they both punch or push the material into that die to form the shape. One is thermally assisted and the other is not.

EX2025, 117:22-118:14

81. Similar to deep drawing, thermoforming involves using a die to shape a sheet of material. The primary difference is that the material is typically plastic, and is heated to enable it to deform and stretch into the die. (*See* Ex. 1029, Penix J.A. (1991) Thermoforming of Plastic Film and Sheet. In: Berins M.L. (eds) SPI Plastics Engineering Handbook of the Society of the Plastics Industry, Inc., pp. 383-426.)

EX1003 '722, ¶81
See also EX1003 '830, ¶81; EX1003 '910, ¶81

K-fee never rebuts Petitioner's evidence that deep drawing and thermoforming are similar capsule manufacturing methods

'722

'830 '910

Pet. '722, 4 fn. 1; Pet. '830, 4 fn.1; Pet. '910., 3 fn. 1; Reply to POR '722, 19-20; Reply to POR '830, 18; Reply to POR '910, 18

K-fee's "Rim" Argument Fails

Petition Maps Capsule Wall

Additionally, it would have been obvious to a POSITA to utilize vertical grooves that are spaced between a flange and bottom that cover between 20-80% of the wall in order to increase structural stability of the capsule wall, or as a design choice in a limited number of options of vertical groove length and location. EX1003, ¶¶296, 303-304.

Pet. '910, 59

Additionally, it would have been obvious to a POSITA to configure radially spaced and vertically oriented drawn grooves on the body of a capsule wall because it was well-known to do so to provide structural stability. *Supra* Section VIII.A.1;

Pet. '722, 59

Grooves Not in the Rim

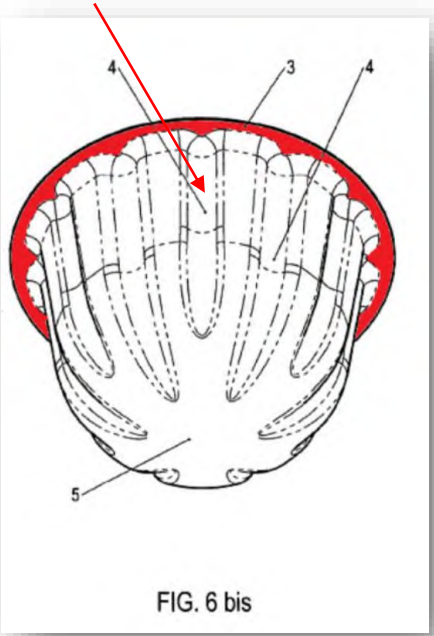

EX1008, Fig. 6bis (annotated)

See also POR '722, 44; POR '910, 63; POR '83, 29 fn. 6

'722	
'830	'910

The Cited Art Teaches and/or Renders Obvious All the Challenged Claims

DEMONSTRATIVE – NOT AN EXHIBIT

Claim 1 of the ’722 Patent

1.	A beverage system for producing a beverage, comprising:
[1.a]	a portion capsule comprising: a foil lid sealed to a base element having a cavity within which a beverage raw material is provided,
[1.b]	the base element comprising a circumferential flange having a top side to which the lid is attached
[1.c]	and a bottom side with a printed optically detectable identifier located on the bottom side,
[1.d]	the optically detectable identifier includes a surface having at least two areas which differ in their reflection properties, and
[1.e]	a beverage machine comprising: a detector to read the optically detectable identifier,
[1.f]	a media chute configured to receive and support the portion capsule, and
[1.g]	a pump controlled to push water into the portion capsule only upon a determination that the read optically detectable identifier agrees with a stored reference,
[1.h]	wherein the base element has a wall region with an electrically conductive section
[1.i]	and radial spaced and vertically oriented drawn grooves,
[1.j]	the cavity has radially spaced and vertically oriented drawn ribs.

Claim 1 of the ’829 Patent

1.	A beverage system for making a beverage, comprising
[1.a]	A) portion capsule comprising: (i) a base element with a cavity, in which a beverage material is provided,
[1.b]	the base element being symmetrical about a central longitudinal axis thereof
[1.c]	and having an open end and a bottom portion,
[1.d]	the base element having a first height that is defined between the open end and the bottom portion
[1.e]	(ii) a rim extending outwardly from the base element, the rim comprising a top side and an opposing bottom side;
[1.f]	(iii) a cover fastened to the base element to close the cavity, the cover is bowed outwardly in a central region of the cover relative to a peripheral region of the cover,
[1.g]	the cover includes a region configured to be pierced at a location that is offset from the central longitudinal axis
[1.h]	the cover has a second height that is defined between the peripheral region and the central region, wherein the first height of the base element is greater than the second height of the cover;
[1.i]	(iv) a barrier layer to prevent moisture or aroma from escaping out of the portion capsule; and
[1.j]	(v) an identifier provided on the bottom side of the rim;
[1.k]	B) a beverage machine comprising: (i) a sensor/detector;
[1.l]	(ii) an insertion shaft configured to receive the portion capsule and to enable detection of the identifier on the bottom side of the rim by the sensor/detector;
[1.m]	(iii) a chamfered mandrel that is configured to pierce the cover at the location that is offset from the central longitudinal axis;
[1.n]	(iv) a seal that is configured to bear against a top side of the cover in a region between the peripheral region of the cover and the region of the cover that is pierced by the chamfered mandrel; and
[1.o]	(v) a pump controlled to supply hot water into the portion capsule only upon detection of the identifier by the sensor/detector and a determination by the beverage machine that the portion capsule is suitable for use with the beverage machine.

Claim 12 of the ’829 Patent

12.	A beverage system comprising:
[12.a]	A) a portion capsule comprising: (i) a base element with a cavity, in which a beverage material is provided,
[12.b]	the base element being symmetrical about a central longitudinal axis thereof
[12.c]	and having an open end and a bottom portion,
[12.d]	the base element having a first height that is defined between the open end and the bottom portion;
[12.e]	(ii) a rim extending outwardly from the base element, the rim having a top side and an opposing bottom side;
[12.f]	(iii) a cover fastened to the base element, the cover is bowed outwardly in a central region of the cover relative to a peripheral region of the cover;
[12.g]	the cover includes a region configured to be pierced at a location that is offset from the central longitudinal axis
[12.h]	the cover has a second height that is defined between the peripheral region and the central region, wherein the first height of the base element is greater than the second height of the cover;
[12.i]	(iv) a barrier layer to prevent moisture or aroma from escaping out of the portion capsule; and
[12.j]	(v) an identifier provided on the bottom side of the rim;
[12.k]	B) a beverage machine comprising:
[12.l]	(i) an insertion shaft having a wall structure into which the portion capsule is received, the insertion shaft defined by a base portion and an annular portion laterally extending outwardly from the base portion in a direction that is transverse to a longitudinal axis of the insertion shaft;
[12.m]	(ii) a chamfered mandrel that pierces the cover at the location that is offset from the central longitudinal axis;
[12.n]	(iii) an optical sensor/detector positioned outside of the base portion of the wall structure of the insertion shaft and below the annular portion, which directs a beam through a portion of the wall structure to read the identifier on the portion capsule;
[12.o]	(iv) a seal that is configured to bear against a top side of the cover in a region between the peripheral region of the cover and the region of the cover that is pierced by the chamfered mandrel; and
[12.p]	(v) a pump that supplies hot water into the portion capsule only after the identifier is read by the sensor/detector.

Claim 1 of ’830 Patent

1.	A portion capsule for making a beverage comprising
[1.a]	a base element having a cavity in which a beverage material is provided
[1.b]	the base element including a wall that is symmetrical about a central longitudinal axis thereof
[1.c]	and having an open end and a closed bottom portion
[1.d]	the base element has a first height that is defined between the open end and the closed bottom portion and
[1.e]	the wall has an outside surface and an inside surface which faces the beverage material
[1.f]	a plurality of indentations arranged on the outside surface of the wall, about the central longitudinal axis
[1.g]	a ledge formed at the inside surface of the wall and projecting towards the central longitudinal axis, the ledge is spaced below the open end of the base element
[1.h]	a rim at the open end of the base element, the rim having a top surface and an opposing bottom surface
[1.i]	an optically detectable individualization identifier, which is carried by the bottom surface of the rim
[1.j]	the optically detectable individualization identifier includes surface areas having different optically detectable reflective properties
[1.k]	the optically detectable individualization identifier is configured to be read by a sensor/detector of a beverage machine to individualize the portion capsule
[1.l]	and to activate a pump of the beverage machine
[1.m]	a barrier layer to prevent moisture or aroma from escaping out of the portion capsule; and
[1.n]	a cover attached to the base element to close the cavity
[1.o]	the cover having a central region and a perimeter, the cover is bowed outwardly to a second height in the central region relative to the perimeter of the cover
[1.p]	the second height of the cover is less than the first height of the base element
[1.q]	the cover includes a piercing region that is configured to be pierced by a mandrel of the beverage machine at a location that is laterally offset from the central longitudinal axis and
[1.r]	a sealing region that is configured to be sealed against by a seal of the beverage machine, the sealing region is located between the piercing region and the perimeter of the cover

IPR2024-00299
Nespresso USA, Inc. Ex. 1075
Page 153 of 265

Claim 8 of ’830 Patent

8.	A portion capsule for making a beverage comprising
[8.a]	a base element having a cavity in which a beverage material is provided
[8.b]	the base element including a wall that is symmetrical about a central longitudinal axis thereof
[8.c]	and having an open end and a closed bottom portion
[8.d]	the base element has a first height that is defined between the open end and the closed bottom portion and
[8.e]	the wall has an outside surface and an inside surface which faces the beverage material
[8.f]	a plurality of vertically-orientated indentations arranged on the outside surface of the wall
[8.g]	a plurality of vertically-orientated ribs arranged on the inside surface of the wall
[8.h]	a rim at the open end of the base element, the rim having a top surface and an opposing bottom surface
[8.i]	an optically detectable individualization identifier, which is carried by the bottom surface of the rim
[8.j]	the optically detectable individualization identifier includes surface areas having different optically detectable reflective properties
[8.k]	the optically detectable individualization identifier is configured to be read by a sensor/detector of a beverage machine to individualize the portion capsule
[8.l]	and to activate a pump of the beverage machine
[8.m]	a barrier layer to prevent moisture or aroma from escaping out of the portion capsule; and
[8.n]	a cover sealed to the base element to close the cavity
[8.o]	the cover having a central region and a perimeter, the cover is bowed outwardly to a second height in the central region relative to the perimeter of the cover
[8.p]	the second height of the cover is less than the first height of the base element
[8.q]	the cover includes a piercing region that is configured to be pierced by a mandrel of the beverage machine at a location that is laterally offset from the central longitudinal axis and
[8.r]	a sealing region that is configured to be sealed against by a seal of the beverage machine, the sealing region is located between the piercing region and the perimeter of the cover.

Claim 1 of the ’910 Patent

1.	A portion capsule for making a beverage and having an individualization identifier capable of being detected by a sensor/detection system for determining whether the portion capsule is suitable for a specific coffee machine, the portion capsule comprises:
[1.a]	a base element with a cavity, in which a raw beverage material is provided, the base element is deep drawn, made of metal, and
[1.b]	has an open upper end portion, a closed bottom, and a wall that extends from the open upper end portion to the closed bottom, the wall is rotationally symmetrical about a central longitudinal axis of the base element, the wall includes an outside surface and an inside surface that faces the raw beverage material, the base element has a first height that is defined between the open upper end portion and the closed bottom;
[1.c]	a flange extending outwardly from the wall at the open upper end portion of the base element, the flange having a top side and an opposing bottom side,
[1.d]	the individualization identifier is located on the bottom side of the flange;
[1.e]	a plurality of vertically oriented grooves arranged on the outside surface of the wall,
[1.f]	the plurality of vertically oriented grooves each have a radiused top end and a radiused bottom end and are spaced a distance between the flange and the closed bottom,
[1.g]	the plurality vertically oriented grooves cover 20% to 80% of the wall between the flange and the closed bottom;
[1.h]	a plurality of vertically oriented ribs arranged on the inside surface of the wall;
[1.i]	a barrier sheet to prevent moisture or aroma from escaping out of the portion capsule;
[1.j]	a cover comprising a metal foil that is sealed to the top side of the flange, the cover having a central region and a perimeter,
[1.k]	the cover is bowed upwardly to a second height at the central region relative to the perimeter,
[1.l]	the second height of the cover is less than the first height of the base element,
[1.m]	the cover being dimensioned and configured to provide a sealing area that is configured to bear against a seal of the specific coffee machine, the cover being dimensioned and configured to provide a piercing area that is configured to be pierced by a mandrel of the specific coffee machine, the piercing area being laterally offset from the central longitudinal axis of the base element;
[1.n]	wherein the portion capsule is free of a filter inside of the cavity; and

Claim 1 of the ’910 Patent (cont’d)

[1.o]	wherein the individualization identifier: i) comprises at least two areas which differ in their optically detectable reflection properties;
[1.p]	ii) includes an optically detectable, machine readable, repeat pattern;
[1.q]	iii) encodes information used by the specific coffee machine to individualize the portion capsule so the portion capsule is permitted to be used with the specific coffee machine;
[1.r]	iv) encodes information used by the specific coffee machine to activate a pump of the specific coffee machine;
[1.s]	v) encodes information used by the specific coffee machine to control a beverage-making process, which includes setting a quantity of hot water, pressure of the hot water, and/or a temperature of the hot water;
[1.t]	vi) is further provided on the outside surface of the wall of the base element; and
[1.u]	vii) is compared to a stored reference to determine if the portion capsule is suitable for the specific coffee machine.

Claim 8 of the ’910 Patent

8.	A portion capsule for making a beverage and having an individualization identifier capable of being detected by a sensor/detection system for determining whether the portion capsule is suitable for a specific coffee machine, the portion capsule comprises:
[8.a]	a base element with a cavity, in which a raw beverage material is provided, the base element is deep drawn, made of metal, and
[8.b]	has an open upper end portion, a closed bottom, and a wall that extends from the open upper end portion to the closed bottom, the wall is rotationally symmetrical about a central longitudinal axis of the base element, the wall includes an outside surface and an inside surface that faces the raw beverage material, the base element has a first height that is defined between the open upper end portion and the closed bottom;
[8.c]	a flange extending outwardly from the wall at the open upper end portion of the base element, the flange having a top side and an opposing bottom side,
[8.d]	the individualization identifier is located on the bottom side of the flange;
[8.e]	a plurality of vertically-oriented grooves arranged on the outside surface of the wall,
[8.f]	the plurality of vertically-oriented grooves each have a radiused top end and a radiused bottom end and are spaced a distance between the flange and the closed bottom,
[8.g]	the plurality of vertically-oriented grooves cover 20% to 80% of the wall between the flange and the closed bottom;
[8.h]	a plurality of vertically oriented ribs arranged on the inside surface of the wall;
[8.i]	a barrier sheet to prevent moisture or aroma from escaping out of the portion capsule;
[8.j]	a cover comprising a metal foil that is sealed to the top side of the flange, the cover having a central region and a perimeter,
[8.k]	the cover is bowed upwardly to a second height at the central region relative to the perimeter,
[8.l]	the second height of the cover is less than the first height of the base element,
[8.m]	the cover being dimensioned and configured to provide a sealing area that is configured to bear against a seal of the specific coffee machine, the cover being dimensioned and configured to provide a piercing area that is configured to be pierced by a mandrel of the specific coffee machine, the piercing area being laterally offset from the central longitudinal axis of the base element;
[8.n]	wherein the portion capsule is free of a filter inside of the cavity; and

Claim 8 of the ’910 Patent (cont’d)

[8.o]	wherein the individualization identifier: i) comprises at least two areas which differ in their optically detectable reflection properties;
[8.p]	ii) includes an optically detectable, machine readable, repeat pattern;
[8.q]	iii) encodes information used by the specific coffee machine to individualize the portion capsule so the portion capsule is permitted to be used with the specific coffee machine;
[8.r]	iv) encodes information used by the specific coffee machine to activate a pump of the specific coffee machine;
[8.s]	v) encodes information used by the specific coffee machine to control a beverage-making process, which includes setting a quantity of hot water, pressure of the hot water, and/or a temperature of the hot water;
[8.t]	vi) is compared to a stored reference to determine if the portion capsule is suitable for the specific coffee machine.

Free of a Filter

’722, ’829, ’830, and ’910 Patents

DEMONSTRATIVE – NOT AN EXHIBIT

Free of a Filter Limitations

’722 Patent

Claims 14/15/16: The beverage system according to claim [5/12/13], wherein …the portion capsule is free of a filter…

EX1001 ’722, claims 14, 15 & 16

’829 Patent

Claims 9/18: The beverage system according to claim [7/16], wherein the portion capsule is free of a filter inside of the cavity.

EX1001 ’829, claims 9 & 16

’722	’829
’830	’910

Pet. ’722, 71; Pet. ’829, 72

IPR2024-00299
Nespresso USA, Inc. Ex. 1075
Page 160 of 265

Free of a Filter Limitations

’830 Patent

Claims 7/12: The portion capsule according to claim [4/10], wherein the portion capsule is free of a filter inside the cavity…

EX1001 ’830, claims 7 & 12

’910 Patent

Claim elements [1.n]/[8.n]: wherein the portion capsule is free of a filter inside of the cavity; and

EX1001 ’910, claims 1 & 8

’722	’829
’830	’910

Pet. ’830, 72-72, 79-80; Pet. ’910, 67

IPR2024-00299
Nespresso USA, Inc. Ex. 1075
Page 161 of 265

Yoakim: A Filter Inside the Cavity is *Optional*

[0171] In this mode, premade radial outlets for the brewed liquid are provided in the capsule. For instance, a series of slits are provided in the lid and/or body. When the capsule is driven in rotation, the brewed liquid can pass through the slits whereas the solid particles are retained in the capsule. An additional filtering layer can be used to filter the liquid depending on the size of the outlets.

[0300] The capsule may comprise a filter means to filter the centrifuged before the liquid is released from the outlets at the sidewall. Preferably, the filter is distant from the sidewall along the median transversal plane inside the capsule. The filter can be a cylindrical filter extending from the upper wall to the lower wall.

[0255] The liquid delivered from the capsule can also be filtered by filtering means provided in the capsule. Such a configuration has many advantages because the device is simplified, the filter does not require cleaning since it is discarded with the capsule.

EX1004, [0171], [0300] & [0255]

[0288] The capsule may comprise a filter means to filter the centrifuged before the liquid is released from the outlets at the sidewall.

[0461] FIGS. **45** to **50** are other variants of capsules according to the invention. For example, the capsule of FIG. **45** has a cylindrical side wall **700**, an upper wall **701** and a lower wall **702** both sealed or connected to the side wall **700**. The capsule is gastight by choosing materials for the walls, e.g., aluminium and/or suitable plastics, which have gas barrier properties. The upper walls and lower walls can be flexible or rigid depending on said materials. For example, wall **701** can be a flexible sealing membrane welded on upper rim **703** of the body **705** forming the sidewall **700** and lower wall **702**. The side wall **700** may comprise outlets **704**, **706** for release of the liquid when centrifuged in the beverage preparation device around central axis AA of the capsule. Optionally, the capsule may comprise a filter part **708** delimiting the cavity **709** for the substance and a collecting recess **710** peripherally placed relative to the central cavity. The filter part may, for instance, be an integral part of the body **705** or a part which is added in the capsule, e.g., a filter cylinder. The centrifuged liquid

EX1004, [0288] & [0461]

’722	’829
’830	’910

Pet.’722, 71; Pet.’829, 72; Pet.’830, 72-73; Pet.’910, 67

IPR2024-00299
Nespresso USA, Inc. Ex. 1075
Page 162 of 265

Free of a Filter – Jobin Testified the Optional Filter in [0171] is Not "in Addition" to Another Filtering Layer in the Capsule

If I go to paragraph 171, I see where it states that [as read]:

"An additional filtering layer can be used to filter the liquid depending on the size of the outlets."

So it says that the filter layer can be used, meaning that it could be optional.

BY ATTORNEY BROOKS:

Q. Well, it's an additional filtering layer, correct?

THE WITNESS: What 171 is describing in this embodiment is radial outlets for brewed liquid. That is not a filtering layer.

EX2011, 57:13-58:5 (objection omitted)

THE WITNESS: Well, according to Yoakim, it says that [as read]:

"An additional filter can be used depending on the size of the outlets."

I think that's up to the -- up to the designer of the capsule to determine what's suitable for that particular case. But it doesn't affect my opinion that there are examples within Yoakim that have no filter.

EX2011, 64:1-11

'722	'829
'830	'910

Reply to POR, '722, 27; Reply to POR '829, 24; Reply to POR '830, 24-25; Reply to POR, '910, 20-21

K-fee's Disclosures Are the Same as Yoakim's

using a sealing and/or an adhesive bonding. Additionally, the cavity could contain one or several built-in elements, such as, for example a filter, a non-woven, a felt, a shut-off device and/or something similar to those. For the case that a

EX1001 '722, 1:60-63
See also EX1001 '829,1:51-54 ; EX1001 '830, 1:51-54; EX1001 '910, 1:50-53

According to the invention it is further provided that a filter element is arranged into the cavity. Such a filter element divides the cavity into a first region for accommodating the beverage raw material and into a second region for accommodating a beverage extract. In particular, it is provided that the filter element is made of a non-woven material.

EX1001 '722, 7:23-29
See also EX1001 '829, 7:15-21; EX1001 '830, 7:15-21; EX1001 '910, 7:12-19

lar by welding or gluing. Preferably a filter element, which is not specifically depicted in the figures, is placed within the base element **2**. For instance, the filter element is made of thermoplastic resin such as, for example, polypropylene. The filter element could also be made of a non-woven material such as, for example, thermoplastic resin. Preferably the filter element divides the cavity **3** in two sections.

EX1001 '722, 11:50-56
See also EX1001 '829, 11:43-49; EX1001 '830, 11:43-49; EX1001 '910, 11:37-48

'722	'829
'830	'910

Reply to POR '722, 27; Reply to POR '829, 24; Reply to POR '830, 18; Reply to POR '910, 20

Free of a Filter – Even if Yoakim's Slits/Outlets *Could* Be Deemed Filter, They Are Not Located *Inside* the Capsule's *Cavity*

[0171] In this mode, premade radial outlets for the brewed liquid are provided in the capsule. For instance, a series of slits are provided in the lid and/or body. When the capsule is driven in rotation, the brewed liquid can pass through the slits whereas the solid particles are retained in the capsule. An additional filtering layer can be used to filter the liquid depending on the size of the outlets.

EX1004, [0171]

[0335] According to an aspect of the invention, the plurality of outlet openings comprises a series of slots and/or holes provided in said peripheral portion of wall. Slots may be appropriate as they can allow release of liquid at a suitable flow rate while restraining the passage of solid particles.

[0336] When slots are provided, the slots may be aligned, e.g., parallel to each other, in at least one array along a peripheral portion of wall of the enclosure. The slots may be of a relatively small length, e.g., of from 0.5 to 5 mm and a small width, e.g., of from 0.08 to 0.6 mm.

EX1004, [0335]-[0336]

	’829	
’830	’910	

Reply to POR, ’722, 27; Pet. ’829, 24; Reply to POR, ’830,24-25; Reply to POR ’910, 20-21; POR ’722, 63; POR ’829, 49; POR ’830, 55; POR ’910, 49

Free of a Filter – The Challenged Patents Refer to the Optional Filter as a Different Element Than the Base Element or Membrane

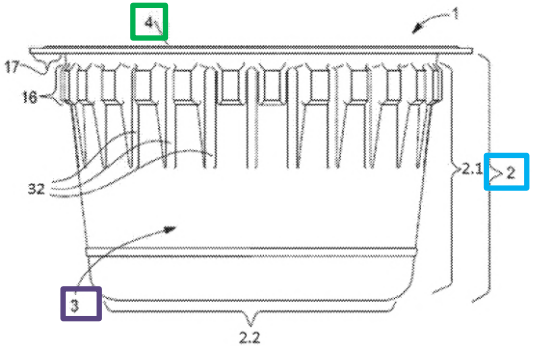

front view of the portion capsule. FIG. **20** shows the portion capsule viewed from an angle below. In all figures the portion capsule is labeled with the reference sign **1**. The portion capsule substantially has a frustoconically shaped base element **2**, which is formed similar to a pot and encloses a cavity **3**. The cavity **3** is sealed by a membrane **4**. Since the

EX1001 '829, Fig. 19 (same in all four IPRs), 11:28-33
See also EX1001 '722, 11:35-40; EX1001 '830, 11:28-33; EX1001 '910, 11:22-27

lar by welding or gluing. Preferably a filter element, which is not specifically depicted in the figures, is placed within the base element **2**. For instance, the filter element is made of thermoplastic resin such as, for example, polypropylene. The filter element could also be made of a non-woven material such as, for example, thermoplastic resin. Preferably the filter element divides the cavity **3** in two sections. It is provided that the first section can be filled with a raw material and the second section can be filled with and particularly collect a beverage's extract, which is not shown, during the extractions process. Both sections are not illustrated individually.

EX1001 '829, 11:43-54
See also EX1001 '722, 11:50-61; EX1001 '830, 11:43-54; EX1001 '910, 11:37-47

'722	'829
'830	'910

Reply to POR '722, 27; Reply to POR '829, 24 fn. 8; Reply to [illegible] fn. 7

Free of a Filter – K-fee's Optional Filter is *Inside* the Capsule Cavity, Where the Coffee Grounds Are Provided

Glucksman testified:

Q Okay. And the cavity in the '910 patent is directed to the area in which the coffee grounds reside; is that correct?

A I believe so.

EX1071, 102:20-103:1

The challenged patents disclose:

The present invention relates to a portion capsule for producing a beverage, comprising a base element having a cavity in which a beverage raw material is provided and which is closed by a membrane fastened to the base element.

EX1001 '910, 1:11-14

See also EX1001 '722, 1:21-24; EX1001 '829, 1:12-15; EX1001 '830, 1:12-15

as webs and/or notches. A gearwheel, for instance, may be obtained by the grooves. Therefore the grooves are part of the base elements' wall, optionally located on the inner side facing to the cavity and/or on the outside facing away from the cavity.

EX1001 '910, 5:5-9

See also EX1001 '722, 5:15-19; EX1001 '829, 5:8-12; EX1001 '830, 5:8-12

'722	'829
'830	'910

Free of a Filter – Yoakim Discloses Filter in the *Device* Not the Capsule

[0271] Preferably, the capsule comprises an internal filter portion placed at the periphery of the enclosure. The internal filter portion can be an internal perforated lid and/or a portion of porous material. The cup-shaped body and internal lid can delimit the enclosure of the capsule. The perforated lid has preferably a peripheral portion of wall comprising a plurality of radial slots. The band of porous material can be placed distant from the upper wall inside the capsule. For instance, the perforated portion of lid or porous portion can be placed a few millimetres, e.g., 1-5 mm, away from the upper wall. It can be placed parallel to the upper wall or inclined (e.g. at 90 degrees) with respect to said upper wall. The said portion is not parallel to the widening sidewall but forms an angle with the sidewall of more than 15 degrees, preferably more than 45 degrees. In another mode, the filter could be part of the device or be formed by the puncturable membrane and piercing members.

EX1004, [0271]

Yoakim describes filters in the brewing device instead of the capsule

’722	’829
’830	’910

Reply to POR ’722, 26-27; Reply to POR ’829, 24; Reply to POR ’830, 20; Reply to POR ’910, 20-21

Free of a Filter –Petitioner is Entitled to Respond to K-fee's Arguments Pertaining to Yoakim's [0271] in its Reply Briefs

*"[T]here is **no blanket prohibition** against the introduction of **new evidence** during an IPR" and new evidence is permissible "as long as opposing party is **given notice** of the evidence and an **opportunity to respond.**"*

Rembrandt Diagnostics, LP v. Alere, Inc.,
76 F.4th 1376, 1384 (Fed. Cir. 2023) (emphasis added)

New arguments in a Reply brief can be appropriate if they *"are **responsive** to **arguments raised** in the **patent owner's response brief**"*

Apple Inc. v. Andrea Elecs. Corp.
949 F.3d 697, 706 (Fed. Cir. 2020) (emphasis added)

'722	'829
	'910

Reply to POR '722, 26-27; Reply to POR '829, 24; Reply to POR '910, 20

IPR2024-00299
Nespresso USA, Inc. Ex. 1075
Page 169 of 265

Free of a Filter – Glucksman's Opinion that Yoakim's Device with a Filter is Not Enabled is Unreliable

159. Second, Yoakim never describes or illustrates an embodiment where the device has a filter and thus does not enable such a centrifugal device. A POSITA would have understood that a filter solely in the device would result in beverage material solids exiting the capsule and dirtying the device, negatively impacting the device's performance and the ability to achieve "[a] cleaner operation" (Ex. 1004 at [0325], [0318]-[0319]). This is the very disadvantage in

EX2020 '910, ¶159
See also EX2020 '722, ¶192; EX2020 '829, ¶179

Q Do you understand this patent to be enabled?

A I don't understand the term "enable," I apologize.

Q You don't understand the term enablement?

A No.

EX1071, 65:17-66:2

'722	'829
	'910

Reply to POR '722, 27; Reply to POR '829, 15; Reply to POR '910, 21

Free of a Filter –K-fee Misconstrues Yoakim's Reference to a "Cleaner Operation"

Techs., 993 F.3d at 1380. A POSITA would have understood that a filter solely in the device would result in beverage material solids exiting the capsule and dirtying the device, negatively impacting the device's performance and the ability to achieve "[a] cleaner operation." Ex.1004, [0325], [0318]-[0319]. This is the very disadvantage in the prior art that Yoakim seeks to overcome. Ex.1004, [0004], [0012], [0014]. Yoakim itself thus elsewhere teaches away from having a filter solely in the device. It is only with hindsight of PO's claims that one would even

POR '910, 53
See also POR '722, 67; POR '829, 70

[0318] The opening of the outlets is preferably controlled by engaging surfaces of the beverage preparation device which are distanced from the rim by a controlled gap.
[0319] The capsule of the invention provides many advantages over the "open" centrifugal systems of the prior art, in particular:

[0325] A cleaner operation.

EX1004, [0318]-[0319], [0325]

'722	'829
	'910

Reply to POR '722, 27 fn. 8; Reply to POR '829, [illegible] fn. 9; Reply to POR '910, 25 fn. 8

Free of a Filter –Yoakim's "Cleaner Operation" is in Comparison to "Open" Prior Art Systems Described in the Background Section

[0318] The opening of the outlets is preferably controlled by engaging surfaces of the beverage preparation device which are distanced from the rim by a controlled gap.

[0319] The capsule of the invention provides many advantages over the "open" centrifugal systems of the prior art, in particular:

[0325] A cleaner operation.

EX1004, [0318]-[0319], [0325]

[0007] DE 102005007852 discloses a machine comprising a removable holder into which an open cup-shaped part of the receptacle is placed; the other part or lid being attached to a driving axis of the machine. However, one disadvantage is the intensive manual handling. Another disadvantage is the difficulty to control quality of the coffee due to a lack of control for the dosing of the powder and a lack of control of the freshness of the coffee powder.

EX1004, [0007]

'722	'829
	'910

DE102005007852

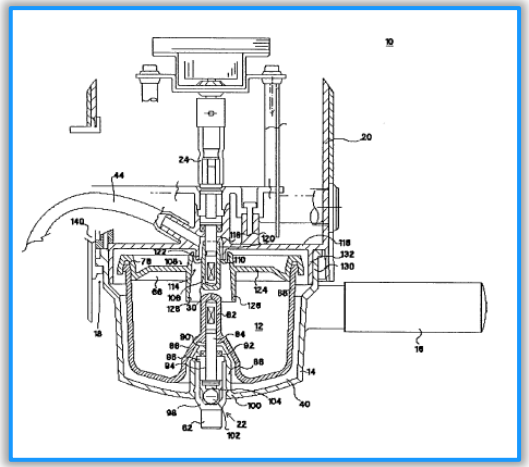

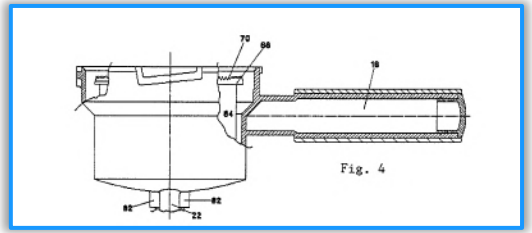

EX1074, Figs. 2 & 4

Reply to POR '722, 27 fn. 8; Reply to POR '829, 27 fn. 8; Reply to POR '910, 25 fn. 8

Free of a Filter –Yoakim's Device Embodiments with a Filter Need Not Be Flawless to Disclose a Capsule "Free of a Filter."

"Our caselaw is clear. It's not necessary to show that a combination is 'the best option, only that it be a ***suitable option****.'"*

Intel Corp. v. Qualcomm Inc., 21 F.4th 784, 800 (Fed. Cir. 2021)

'722	'829
	'910

Reply to POR '722, 27; Reply to POR '829, 19; Reply to POR '910, 21

Free of a Filter – A Device Filter is Easy to Clean

Q Well, what do you do with the coffee that's left over from the first brewing before putting in the new coffee?

A You remove the -- let's talk about the carafe brewing right now. For example, you take the old filter out --

Q -- uh-huh.

A -- and dispose of its content.

Q Uh-huh.

A And if it is a -- there may be a permanent filter, which is made out of mesh, or there may be a filter holder that includes, within it, a paper filter. You, essentially, dump the paper filter with its content. Or in the case you have a permanent filter, you go wash it, dry it, return the filter holder or the filter to the machine, pour in more coffee grounds, as required for the size of carafe that you are planning to brew. Close the lid and start the machine.

EX1071, 36:20-37:16

Reply to POR '722, 27-28; Reply to POR '829, 15; Reply to POR '910, 20, 21

'722	'829
	'910

Free of a Filter – K-fee's Claim That a Filter-Free Capsule Would Not Function Properly is Belied by the Challenged Patents

using a sealing and/or an adhesive bonding. Additionally the cavity could contain one or several built-in elements, such as, for example a filter, a non-woven, a felt, a shut-off device and/or something similar to those. For the case that a

EX1001 '910, 1:50-53
See also EX1001 '722, 1:60-63; EX1001 '829, 1:51-54; EX1001 '830, 1:51-54

2.2 and a wall region **2.1**. It is provided that the base element contains the raw material and, if necessary, build-in elements like a filter as illustrated here. The expert knows that

EX1001 '910, 10:9-11
See also EX1001 '722, 10:22-24; EX1001 '829, 10:15-17; EX1001 '830, 10:15-17

The challenged patents disclose an optional filter but **provide no detail** on how its capsules would operate without it

'722	'829
'830	'910

Reply to POR 722, 28; Reply to POR '829, 25; Reply to POR '830, 25; Reply to POR '910, 21

Free of a Filter – A POSITA Would Have Found it Obvious to Omit a Filter from the Capsule to Simply its Design

346. Yoakim also explicitly discloses embodiments including portion capsules where the cavity does not have a filter. *See, e.g.*, Ex. 1004 at FIG. 6-7, 54-60, [0197]-[0199]. It would also have been an obvious design choice to a POSITA to not use a filter in a centrifuge based brewing system in order to simplify the capsule design.

EX1003 '910, ¶346
See also EX1003 '722, ¶358; EX1003 '829, ¶322; EX1003 '830, ¶334

'722	'829
'830	'910

Pet. '722, 71, [illegible]; Pet. '830, 72-73; Pet. '910, 67

IPR2024-00299
Nespresso USA, Inc. Ex. 1075
Page 176 of 265

Groove Spaced a Distance and Groove Coverage

’910 Patent

DEMONSTRATIVE – NOT AN EXHIBIT

Grooves Spaced a Distance Limitations

’910 Patent

Claim [1.f]: “the plurality of **vertically oriented grooves** each have a radiused top end and a radiused bottom end and are **spaced a distance between the flange and the closed bottom**”

EX1001 ’910, claim 1

Claim [8.f]: “the plurality of **vertically-oriented grooves** each have a radiused top end and a radiused bottom end and are **spaced a distance between the flange and the closed bottom**”

EX1001 ’910, claim 8

’910

Pet. ’910, 56-59.

Rapparini Discloses a Plurality of Vertically-Oriented Grooves/Ribs Spaced with Radiused Top and Bottom Ends

K-Fee does not dispute this

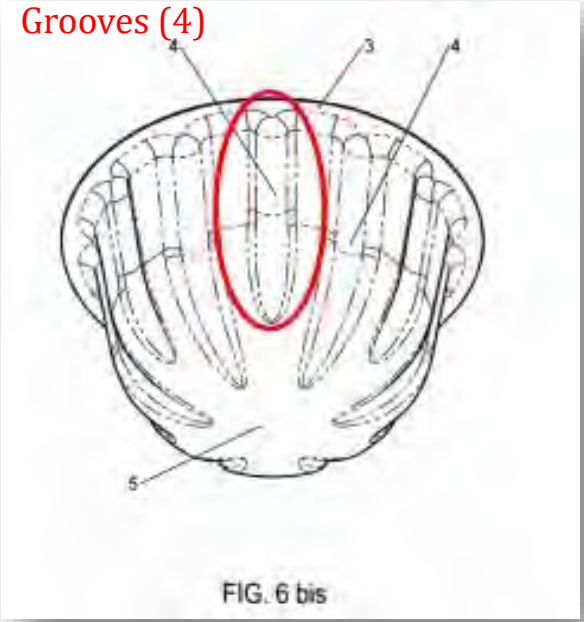

EX1008, FIG. 6bis (annotated).

'910

Pet.'910, 56-57; Reply to POR.'910, 24-26.

IPR2024-00299
Nespresso USA, Inc. Ex. 1075
Page 179 of 265

Rapparini's Grooves/Ribs Are Spaced a Distance Between the Flange and the Closed Bottom

[0011] According to a further embodiment of the present invention, a container is provided, wherein long and short ribs are alternated along the surface of the body. The stability of the container is accordingly optimized by providing for example long ribs extending at least partially in the bottom region of the container alternated to short ribs extending only along the side region of the container.

EX1008, [0011]

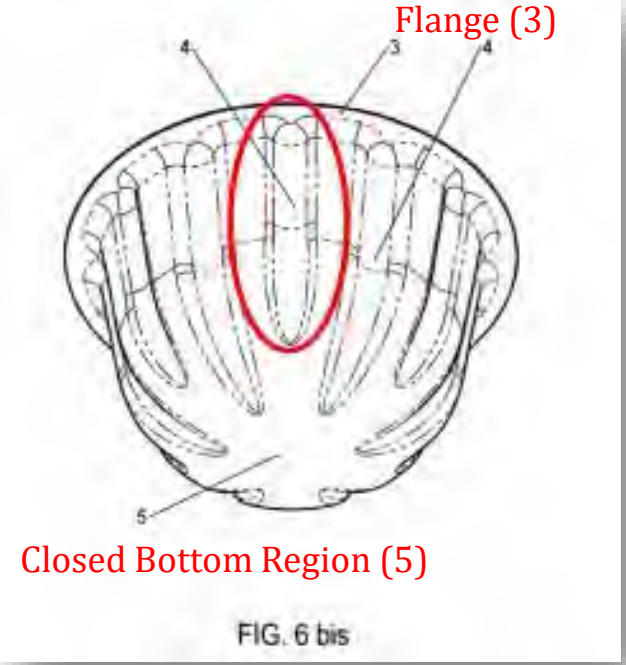

EX1008, Fig. 6bis (annotated)

'910

Pet. '910, 57; Reply to POR '910, 24.

Rapparini's Short Grooves/Ribs Extend Only Along the Side

[0011] According to a further embodiment of the present invention, a container is provided, wherein long and short ribs are alternated along the surface of the body. The stability of the container is accordingly optimized by providing for example long ribs extending at least partially in the bottom region of the container alternated to short ribs extending only along the side region of the container.

EX1008, [0011]

'910

Other References Show Grooves/Ribs Only Along the Side

EX1035

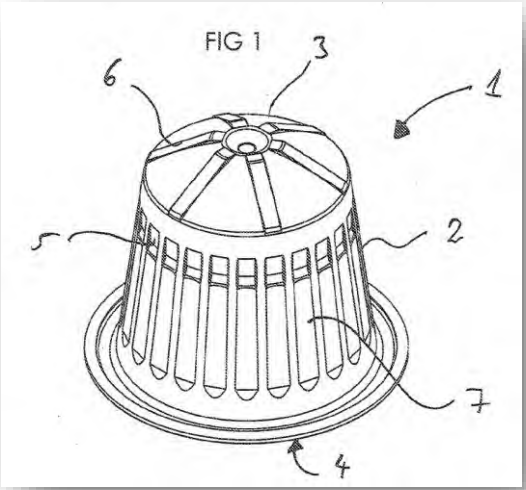

EX1035, (Mariller), [0027], FIG. 1.

EX1031

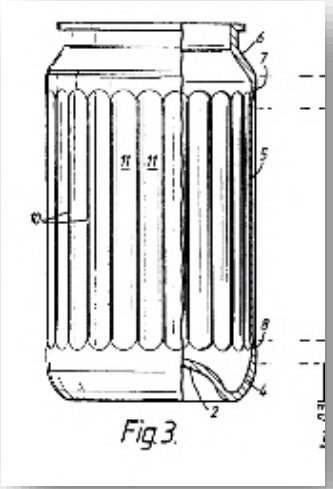

EX1031, (Claydon), FIG. 3.

EX1032

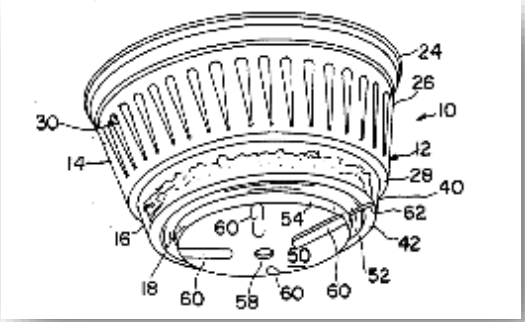

EX1032, (Erickson), 5:15-19, FIG. 1.

’910

Pet. ’910, 4-5 (citing to EX1003 ’910, ¶¶87-94); Reply to POR ’910, 24-26.

K-fee's Argues Rapparini's Ribs Are Not Spaced From the Flange

(Pet., 57). But the ribs of Rapparini's Figs. 6 and 6bis intersect with and are not spaced from the flange (annotated in red below). Ex.2020, ¶¶179-180.

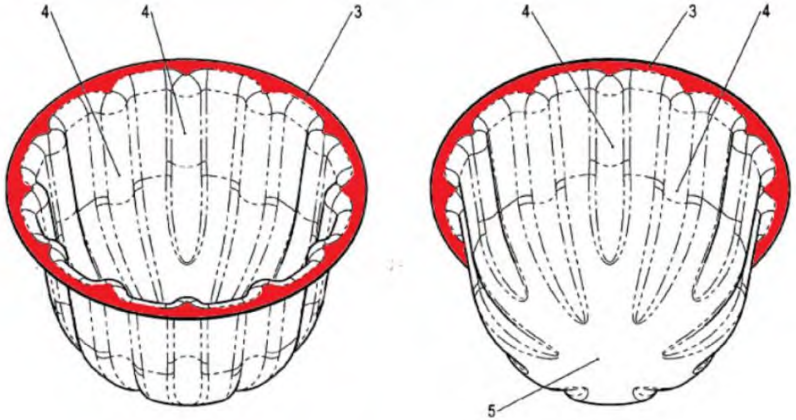

FIG. 6 FIG. 6 bis

POR '910, 63, showing EX1008, FIGs. 6 and 6bis (annotated).

'910

Reply to POR '910, 24-25.

The Figure K-fee Relies on Shows a Rim That Is Flat

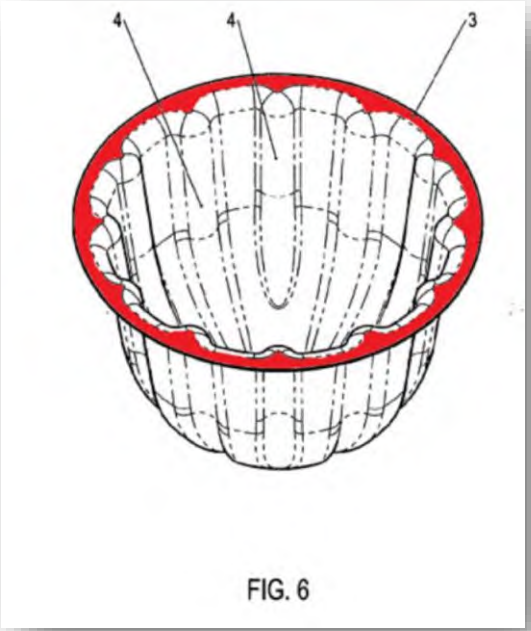

POR '910, 63 (showing EX1008, FIG. 6 (annotated))

[0055] As can be further seen in FIGS. **6** and **6***bis*, the container is provided with an upper annular rim **3** adapted to further stiffen the structure of the body of the container. The annular rim **3** is substantially flat and has substantially the same thickness as the flat strip **1** of permeable, filtering and thermoformable material.

EX1008, [0055].

'910

Reply to POR '910, 24-26.

Groove Coverage Limitations

’910 Patent

Claim [1.g]: “the plurality of vertically oriented grooves **cover 20% to 80%** of the wall between the flange and the closed bottom”

Claim [8.g]: “the plurality of vertically oriented grooves **cover 20% to 80%** of the wall between the flange and the closed bottom”

Claim 4: “The portion capsule according to claim 3, wherein the vertically-oriented grooves **cover 40% to 60%** of the wall between the flange and the closed bottom.”

’910

Pat. ’910: 56, 59, 76, 78

Rapparini's Grooves/Ribs Have *Variable* Lengths Along the Body

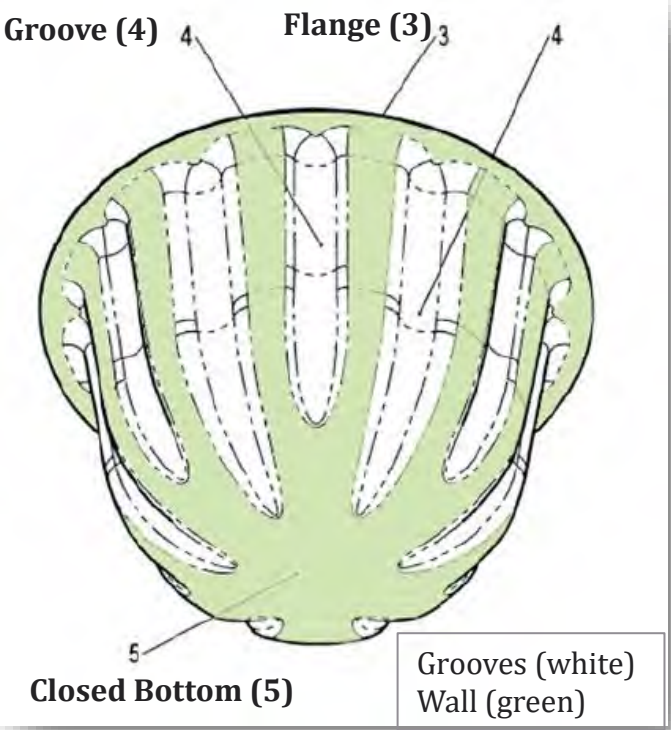

EX1008, FIG. 6bis (annotated).

'910

[0009] The present invention is based on the idea of providing the body of the container with longitudinal stiffening ribs wherein the length of the ribs is variable along the surface of the body. The presence of ribs having different lengths on the body of the container allows the optimization of the stability of the container. The modulation of the length of the ribs along the surface of the container allows improving the stability and rigidity of the system.

EX1008, [0009]
See also [0010]

Pet. '910, 56-59; Reply to POR '910, 24-26.

Rapparini's Fig. 6 bis Depicts Grooves Covering 20%-80% and 40%-60% of the Wall, as Claimed

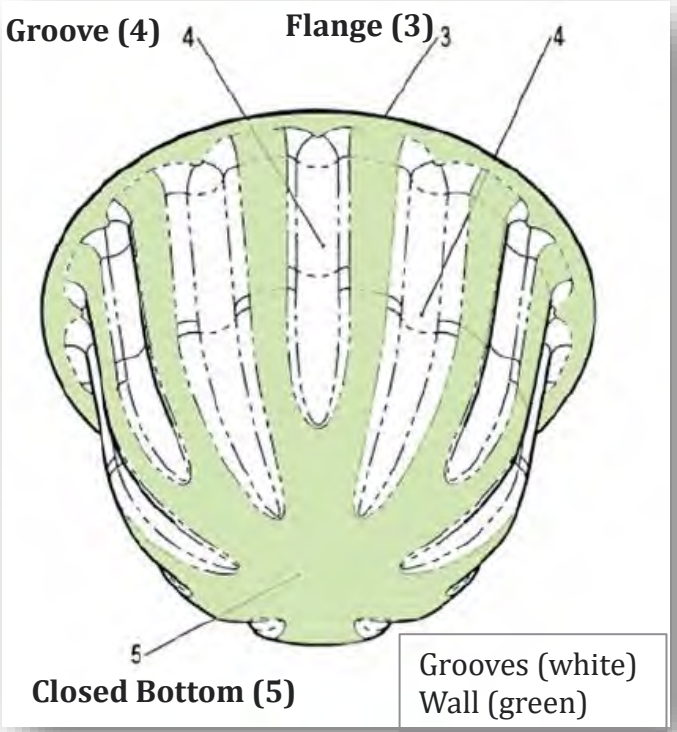

302. A person of ordinary skill in the art viewing FIG. 6bis (below) of Rapparini would have understood Rapparini's grooves also cover 20-80% of the wall between the flange and closed bottom. EX1008, [0009]-[0011]. As shown below, the annotated FIG6bis shows 20-80% of the wall covered by grooves:

385. For the same reasons as discussed above, Rapparini discloses grooves covering 40% to 60% of the wall between the flange and the closed bottom. Rapparini discloses that the length of the grooves can be "variable along the surface of the body." EX1004, [0009]. Rapparini further discloses that the length of the

EX1003 '910, ¶¶302, 385

'910

Pet. '910, 56, 58-59, 76-78; Reply to POR '910, 24-26.

The Broadly Claimed % Groove Coverage Is a Simple Design Choice Amongst Limited Number of Options

304. Further, in viewing FIG. 6bis (above) of Rapparini a person of ordinary skill would understand that grooves of varying lengths are disclosed along the side wall of the container. The lengths would be selected according to a simple design choice, from a limited range of lengths available, which would easily include the range from 20% to 80%. It would also have been obvious to a POSITA to utilize vertical grooves that are spaced between a flange and bottom that cover between 20-80% of the wall as a design choice in a limited number of options of vertical groove length and location.

EX1003 '910 Decl. ¶304
See also EX1003 '910, ¶387

'910

K-fee's Interpretation of the % Groove Coverage Limitations

K-fee offers no calculations to support the below assertion, yet takes issue with the Petition for lacking such calculations

[4a] wherein the vertically-oriented grooves cover 40% to 60% of the wall between the flange and the closed bottom.	The portion capsule's vertically-oriented grooves cover 40% to 60% of the wall between the flange and the closed bottom. The below annotated image illustrates this limitation.
	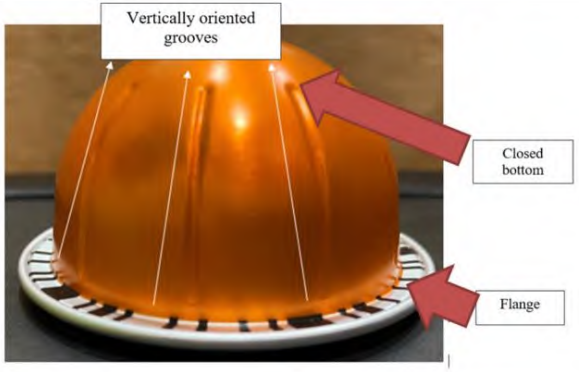

EX1049, Infringement Contentions '910 Patent, 477-478; *See also* 440-441.

Pet. '910, 57. Reply to POR '912, 25.

'910

Jobin: Rapparini Discloses Grooves/Ribs of Variable Lengths Falling Within the Broadly-Claimed Ranges

Q. Have you made a calculation as to exact percentage that the grooves cover the walls between the flange and the closed bottom in Rapparini?

A. No, because the particular groove configuration can be varied between long and short. It all depends on what you need when you're designing this capsule. Whether you want it to be very short or longer is up to the person that's designing the capsule. It's trivial to change the length of lengths. It's not -- it's just obvious to do so.

EX2025, 123:13-25

Q. What percentage of covering by grooves is disclosed in Rapparini?

A. I think what I would say is that a wide range of different groove configurations are disclosed. They talk about: That the grooves in part rigidity by stiffening the wall. They talk about, for example, in Paragraph 9, I cite that: The length of the grooves can be variable along the surface of the body, and they further disclose that: The length of the grooves are alternated along the surface of the body, i.e., between long and short, to increase the stability of the portion capsule, and that's Paragraph 11.

EX2025, 121:24-122:13

Reply to POR '910, 25-26.

Side Wall Identifier

’722 and ’910 Patents

DEMONSTRATIVE – NOT AN EXHIBIT

Side Wall Identifier Limitations

’722 Patent

Claim 13: “The beverage system according to claim 7, wherein the optically detectable **identifier** is located on **a side wall of the base element**.”

’910 Patent

Claim [1.t]: wherein the individualization **identifier** . . . “is further provided on the **outside surface of the wall of the base element**”

’722

’910

Pet. ’722, 70-71; Pet. ’910, 74.

Jarisch 929 Discloses the Identifier Can Be Disposed on Both the Capsule Body and Rim

[0064] The support can be part of, or be formed directly on, the body of the capsule. The support can also be disposed on the bottom side of the rim of the capsule. Typically, the distance of the support from the peripheral edge is not more than 10 mm, more preferably not more than 8 mm. In particular, the support can be made of a paint and/or a lacquer and/or an embossed ply of material of the capsule itself.

EX1006, [0064]
See also [0063], [0090]-[0091]

[0016] More particularly, according to a first aspect, the invention relates to a support adapted to be associated with, or part of, a capsule for the preparation of a beverage. The support comprises a section on which at least one sequence of symbols is represented so as that each symbol is sequentially readable, by a reading arrangement of an external device, while the capsule is driven in rotation along an axis of rotation, each sequence coding a set of information related to the capsule. The external device may be embedded into the pro-

EX1006, [0016]

’722

’910

Both Experts Agree Placing the Identifier on Both the Capsule Wall and Under the Flange is Beneficial

Jobin:

371. Furthermore, it would have been obvious to a person skilled in the art to also print the individualization identifier both on the bottom of the flange and on the outside surface of the wall of the base element to provide an alternative location to read the code in order to increase the chances of the code being read.

EX1003 '910, ¶ 371
See also EX1003 '722, ¶ 353.

Glucksman:

If you were designing a capsule that had an identifier both on the bottom of the flange and on the outside surface of the wall, is there any benefit you can see to having it in both places?

A I would say there might be a benefit where, if for some unique reason, the identifier cannot be read in one of those two locations, then the opportunity for it to be read on the other location would enhance the -- you know, the experience.

EX1071, 112:21-113:10 (objection omitted)

'722

'910

Reply to POR '722, Sir Reply to POR '910, 28

IPR2024-00299
Nespresso USA, Inc. Ex. 1075
Page 194 of 265

Jarisch 929 Discloses Far More Than the Challenged Patents

Glucksman found no disclosure of an identifier on both the capsule flange and side wall in the ’910 Patent

Q Okay. And going back to the disclosure of the '910 patent. Are you aware of anywhere in the patent where it discloses an identify -- an individualization identifier that's optically read, that's both on the bottom of the flange and on the capsule side wall?

[...]

A I am not able to see, in the figures that I just viewed, that there is an identifier located in both locations.

EX1071, 113:11-22

’722

’910

Reply to POR 722, 23; Reply to POR 910, 26

IPR2024-00299
Nespresso USA, Inc. Ex. 1075
Page 195 of 265

K-fee's Ignores its Apparent Interpretation of the "Side Wall Identifier" Limitations

K-Fee interprets "side wall identifier" as met by a slightly "overprinted" code

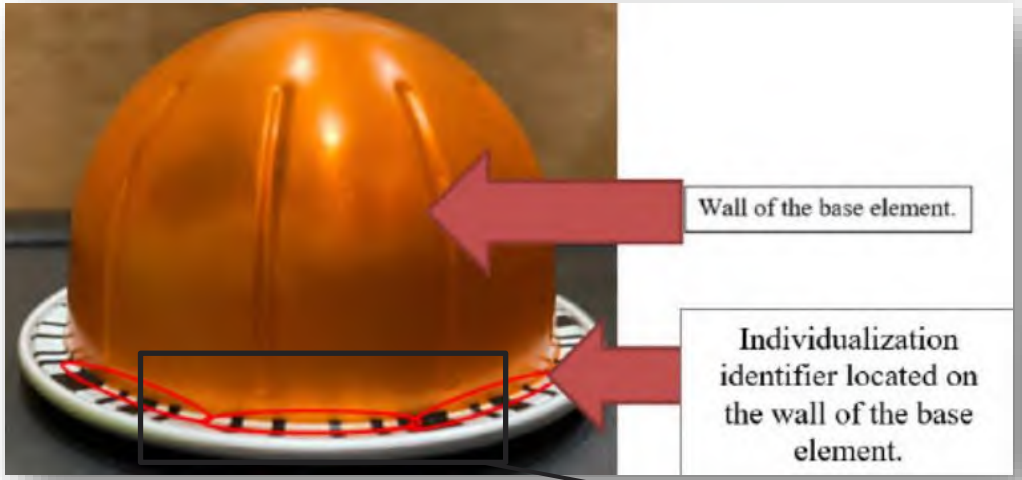

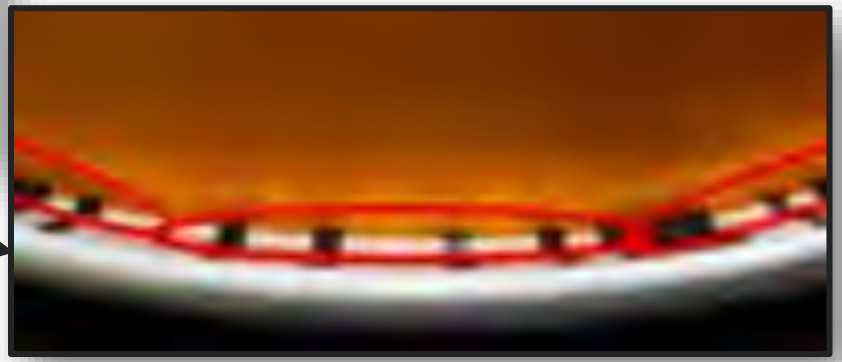

EX1049 '910, 471-472;
See also EX1049 '722, 386-387.

'722

'910

Pet. '722, 70-71; Pet. '910. 74; Reply to POR '722, 29-30; Reply to POR '910, 27-28.

K-fee Overlooks that Jarisch 929 Teaches the Benefits of Repeating the Code and/or Moving it to Different Locations

[0068] The sequence is preferably repeated along the circumference in order to ensure a reliable reading. The sequence is repeated at least twice on the circumference. Preferably, the sequence is repeated three to six times on the circumference. Repetition of the sequence means that the same sequence is duplicated and the successive sequences are positioned in series along the circumference so that upon a 360-degree rotation of the capsule, the same sequence can be detected or read more than one time.

EX1006, [0068]

[0017] In an embodiment, the support can be a part of the capsule itself. In particular, the support may be spread along the circumference or a part of the circumference of the capsule. The support can be further located close to the peripheral edge of the capsule, the peripheral edge being defined as the outermost circular line of the capsule. These locations are particularly advantageous since they offer both a large area for the symbols to be disposed and is less prone to damages caused by the processing module and in particular by the pyramidal plate, and to ingredients projections. As a consequence, the amount of coded information and the reliability of the readings are both improved.

EX1006, [0017]

'722

'910

Hot Water

’910 Patent

DEMONSTRATIVE – NOT AN EXHIBIT

Hot Water Limitations

’910 Patent

Claim [1.s]: “encodes information used by the specific coffee machine to control a beverage-making process, which includes setting a quantity of **hot water**, pressure of the **hot water**, and/or temperature of the **hot water**”

Claim [8.s]: “encodes information used by the specific coffee machine to control a beverage-making process, which includes setting a quantity of **hot water**, pressure of the **hot water**, and/or temperature of the **hot water**”

’910

IPR2024-00299
Nespresso USA, Inc. Ex. 1075
Page 199 of 265

Using Hot Water in Coffee Systems is Common Sense

[0003] It is known to prepare beverages wherein a mixture consisting of brewed coffee and coffee powder is separated with centrifugal forces. Such a mixture is obtained by bringing hot water and coffee powder together for a defined time. The water is then forced through a screen, on which screen powder material is present.

EX1004, [0003]

[0506] The capsules **1**A, **1**B are indented to be inserted in the centrifuge brewing device **207** (FIGS. **54** and **55**). As illustrated in FIG. **54**, the device comprises a brewing unit **800** fed with heated liquid, preferably hot water, by a fluid circuit **209** comprising a heater **210**, a pump **211** for metering liquid in the capsule and a liquid supply, e.g., a water reservoir **212**. The brewing unit comprises an interface assembly **213**, a capsule holder **214** and a collector **215**. A peripheral outlet **29**,

EX1004, [0506]

'910

The Prior Art Discloses Encoding Information Used to Control Hot Water

[0523] In particular, the identification means can set different volumes of injected liquid for delivering different beverage volumes and/or set the rotational speed of the device. In particular, for the larger capsules in the set, the identification means can set larger liquid volumes than for smaller capsules. Also, the identification means can also set different rotational speeds for smaller capsules than for larger capsules in order t provide different residence time of liquid in the capsule o provide different flow characteristics in the set of capsules Finally, the identification means may also set different back pressure values in the capsule or at the outlet **229** where th flow restriction is positioned. Preferably, the volume o injected liquid, the rotational speed and the back-pressure i the capsule are adjustable/adjusted by the control means (C as a function of the volume. In addition, the temperature of th injected liquid can be varied as a function of the volume of the capsule, by the control means selectively activating the liquid heater **210**. For instance, the temperature of the liquid can be heated at a higher temperature for compensating the temperature losses of the liquid in larger volumes.

'910

as a function of the volume. In addition, the temperature of the injected liquid can be varied as a function of the volume of the capsule, by the control means selectively activating the liquid heater **210**. For instance, the temperature of the liquid can be heated at a higher temperature for compensating the temperature losses of the liquid in larger volumes.

EX1004, [0523]

Pet. '910, 11; Reply to POR '910, 26.

Electrically Conductive Individualization Identifier

’910 Patent

DEMONSTRATIVE – NOT AN EXHIBIT

Electrically Conductive Individualization Identifier Limitation

’910 Patent

Claim 2: “The portion capsule according to claim 1, wherein the individualization **identifier is electrically conductive**.”

EX1001 ’910, claim 2

’910

IPR2024-00299
Nespresso USA, Inc. Ex. 1075
Page 203 of 265

K-fee's Litigation Interpretation of "Individualization Identifier [That] Is Electrically Conductive"

[2a] wherein the individualization identifier is electrically conductive.	The portion capsule's individualization identifier is electrically conductive. The individualization identifier located on the bottom surface of the flange is an aluminum membrane. Aluminum is the "second most conductive material available in a practical sense." *See* https://www.gabrian.com/does-aluminum-conduct-electricity/. The below annotated image illustrates this limitation.

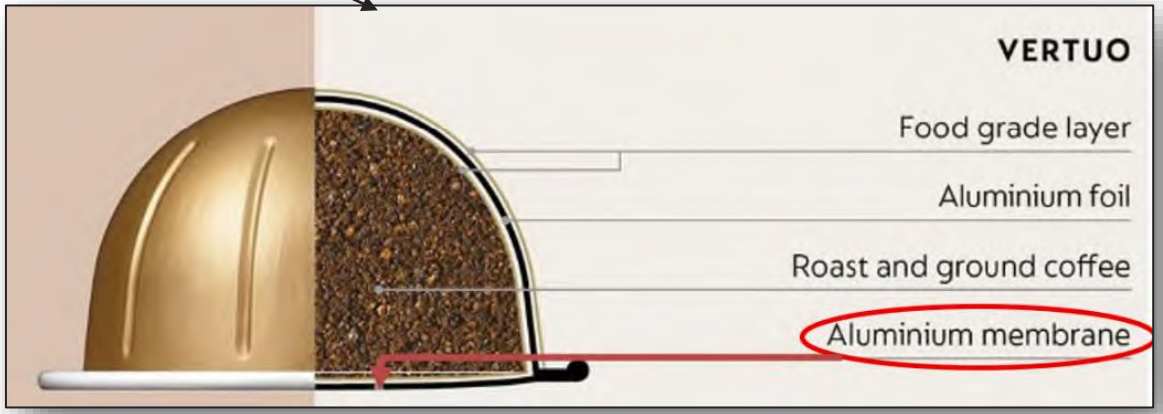

EX1049 '910 Patent, 474-475

'910

Pet. '910, 19-74; Reply to POR '910, 22-29

IPR2024-00299
Nespresso USA, Inc. Ex. 1075
Page 204 of 265

Yoakim Discloses Capsules and Membranes Made of Aluminum

along the whole periphery of the body of the capsule. The body of the capsule can be made of plastic and/or aluminium or aluminium alloy. For example, it can be moulded by injection of plastic or deep drawn in aluminium. For example, the

EX1004, [0215]

[0128] The capsule can comprise a sealing lid. The sealing lid can comprise a flexible membrane. The membrane can comprise gas barrier and support layers made of polymers, aluminium and/or aluminium alloys.

EX1004, [0128]

’910

Pet. ’910, 74-75

Aluminum Capsules Are Electrically Conductive

[0044] The electrically conductive material may be metallic, e.g. containing aluminium, copper, iron, etc. . . . or may be a conductive ceramic or organic material, e.g. a conductive paint or plastic material.

EX1004, [0044]

[0045] The capsule can be made of a structure consisting predominantly of the electrically conductive material, in particular wherein at least 60 wt %, such as at least 75 wt %, optionally at least 95 wt % of the capsule. For instance, the capsule is made of a metallic packaging, e.g. an aluminium-based packaging, with or without an insulating outer layer for protecting the structure and/or for visual recognition reasons.

EX1044, [0045]

’910

Pet. ’910, 75; Reply to POR ’910, 28-29

Jarisch 929 Discloses the Identifier "May Be Printed or Embossed" on the Capsule and Have Variable Characteristics

ing according to the value conveyed by said symbol. Each symbol may be printed and/or embossed. The shape of the

[...]

natural light e.g., ink visible under UV. The symbols may be printed or embossed by a pattern which possesses surfaces having different reflective and/or absorbing properties to light. The pattern may possesses first surfaces having inclined mirroring or absorbing properties to light and second surfaces having flat mirroring or flat reflective properties to light. Other variable physical characteristics may be chosen to distinguish each symbol, for example the color, the reflectivity, the opacity, the light absorption level, the magnetic field, the induced magnetic field, the resistivity, the capacity, etc. For

EX1006, [0027]

'910

Pet. '910, 75; Reply to POR '910, 28-29

Jarisch 929's Discloses Electrically Conductive Identifiers

375. Jarisch 929 discloses that the identifier "may be printed or embossed" on the capsule rim and may vary by "magnetic field, induced magnetic field, resistivity, [or] capacity." EX1006, [0027], [0102]-[0104], [0113]-[0115]. A POSITA would understand Jarisch 929's code provided on Yoakim's aluminum capsule would therefore be electrically conductive. It would also be obvious to a POSITA for a code placed on an aluminum capsule to maintain the electrical conductivity of the capsule surface to serve as a means for recognition.

EX1003 '910, [0027]

'910

Pet. '910, 75; Reply to POR '910, 28-29

Glucksman's Opinion is Conclusory and Unsupported

Glucksman's Opinion:

XIII. The Art Fails To Teach or Render Obvious That The Individualization Identifier Is Electrically Conductive (Claims 2-7)

193. Claims 2-7 require "the individualization identifier is electrically conductive." The Petition fails to identify any teaching or suggestion of such an identifier. Petitioner contends that Yoakim's capsule is aluminum but identifies no teaching that the aluminum there is an "individualization identifier," as claimed. Pet. at 74-75. Petitioner then identifies Jarisch 929's teaching of "printed and/or embossed" (Ex. 1006 at [0027]) symbols having "magnetic field, induced magnetic field, resistivity, [or] capacity." Pet. at 75. But Petitioner makes no showing that such symbols disclose, expressly or inherently, electrical conductivity.

194. A POSITA would have understood that these characteristics in [0027] apply to insulators. Moreover, Petitioner fails to identify any teaching to suggest for the obviousness of an individualization identifier that is electrically conductive.

EX2020 '910, ¶¶193-194

POR:

G. The Art Fails To Teach or Render Obvious the Individualization Identifier Is Electrically Conductive (Claims 2-7)

Claims 2-7 require "the individualization identifier is electrically conductive." The Petition fails to identify any teaching or suggestion of such an identifier. Petitioner contends that Yoakim's capsule is aluminum but identifies no teaching that the aluminum there is an "individualization identifier," as claimed. Pet., 74-75. Petitioner then identifies Jarisch929's teaching of "printed and/or embossed" (Ex.1006, [0027]) symbols having "magnetic field, induced magnetic field, resistivity, [or] capacity." Pet., 75. But Petitioner makes no showing that such symbols disclose, expressly or inherently, having electrical conductivity. A POSITA would have understood that these characteristics in [0027] apply to insulators. Moreover, Petitioner fails to identify any teaching to suggest for the obviousness of an individualization identifier that is electrically conductive. Ex.2020, ¶¶193-194.

POR '910, 69-70
Reply '910, 28-29.

'910

Identifier with Concavity/Convexity

’910 Patent

DEMONSTRATIVE – NOT AN EXHIBIT

Identifier Exhibiting Concavity/Convexity Limitations

’910 Patent

Claim 6: “The portion capsule according to claim 3, wherein the individualization **identifier exhibits a concavity and/or a convexity**.”

’910

Pet. ’910, 78-79.

IPR2024-00299
Nespresso USA, Inc. Ex. 1075
Page 211 of 265

K-Fee's Interpretation of an Identifier Exhibiting Concavity: an Overprinted Code

K-Fee interprets the transition of the code from the rim to the body of the below shown capsule as a "concavity."

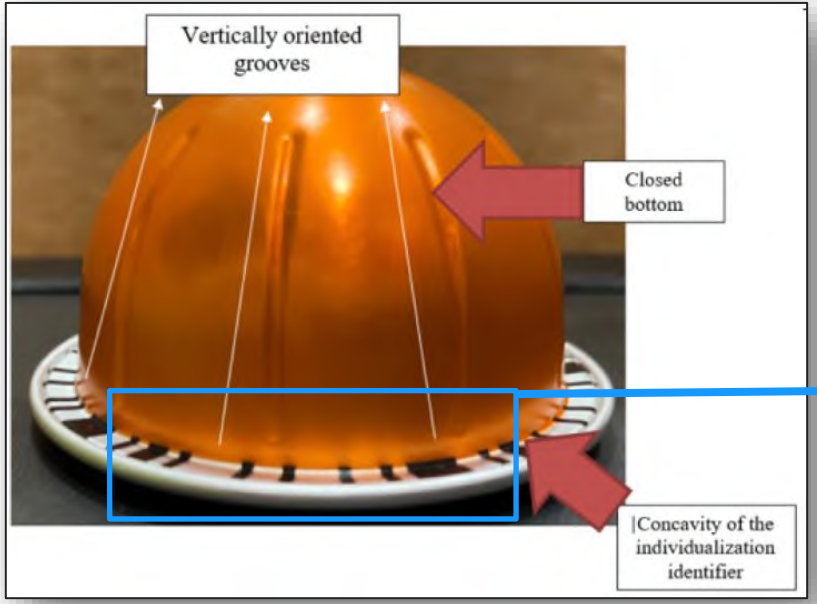

EX1049, Infringement Contentions '910 Patent, 479-480.

'910

Pet. '910, 78-79; Reply to POR '910, 29-30.

Jarisch 929 Discloses Locating a Code on Both the Capsule Rim and Body

[0063] In an embodiment, the support can be a part of the capsule itself. In particular, the support may be spread along the circumference or a part of the circumference of the capsule. The support can be further located close to the peripheral edge of the capsule, the peripheral edge being defined as the outermost circular line of the capsule. These locations are

[0064] The support can be part of, or be formed directly on, the body of the capsule. The support can also be disposed on the bottom side of the rim of the capsule. Typically, the

[0090] The capsule **7** may comprise a support mounted having at least one sequence **70**, and mounted on the bottom side **72** of the rim **73** of the capsule. The symbols are repre-

EX1006, [0063], [0064], and [0090]

'910

Pet. '910, 74, 78-79, Reply to POR 910, 29-30.

IPR2024-00299
Nespresso USA, Inc. Ex. 1075
Page 213 of 265

EX2021 – a Later Issued Jarisch Patent – Confirms the Capsule Rim Could be Formed With a Bend

The rim is not necessarily horizontal as illustrated. It can be slightly bended. The rim **23** of the capsules preferably

EX2021, 9:28-29

'910

Reply to POR '910, 30.

Overprinting the Code on the Rim and Body is an Obvious Design Choice

Jobin:

396. As set forth in element [1.t], Jarisch 929 discloses locating the code on both the bottom of the flange and the capsule body wall. Accordingly, it would have been obvious to a POSITA based on Jarisch 929 to arrive at this limitation, and it also would have been an obvious design choice.

EX1003, '910, ¶396.

'910

Pet. '910, 78-79; Reply to POR '910, 29-30.

An Overprinted Code Would Improve Code Reading Reliability

Glucksman:

If you were designing a capsule that had an identifier both on the bottom of the flange and on the outside surface of the wall, is there any benefit you can see to having it in both places?

A I would say there might be a benefit where, if for some unique reason, the identifier cannot be read in one of those two locations, then the opportunity for it to be read on the other location would enhance the -- you know, the experience.

'910

EX1071, 112:21-113:30.

Reply to POR '910

Groove Laterally Offset from Chamfered Mandrel

’829 Patent

DEMONSTRATIVE – NOT AN EXHIBIT

Groove Laterally Offset from Chamfered Mandrel Limitations

’829 Patent

Claim 4: “The beverage system according to claim 3, wherein the beverage machine comprises **a groove that is laterally offset** from the chamfered mandrel, and the seat is at least partially seated in the groove.”

EX1001 ’829, claim 4

’829

Pet. ’829, 69-70.

"Laterally Offset"

K-Fee argues that the Board's prior decision involving "laterally offset" from IPR2022-01574 (Paper 29) should be controlling.

- However:
  - At the time of the '829 Petition, the PTAB had not issued its Decision in IPR2022-01574;
  - K-Fee never argued that this term should be construed; and
  - The Board's prior construction did not include evidence regarding the meaning of "offset" because in IPR2022-01574 the parties only disputed the *direction* (i.e., laterally)—not the *extent of*—offset.

A proper interpretation is "**a groove that is *at least partially* off to the side of any part of the chamfered mandrel**," which is consistent with both the intrinsic and extrinsic evidence.

'829

POR/829, 55-58; Reply to POR/829, 26.

Intrinsic Evidence Supports Petitioner's Interpretation

Nothing in the '829 Patent's claim language requires the groove to be entirely to the side of the mandrel:

> **4**. The beverage system according to claim **3**, wherein the beverage machine comprises a groove that is laterally offset from the chamfered mandrel, and the seal is at least partially seated in the groove.

EX1001, '829 Patent, claim 4.

If K-Fee had intended a narrow interpretation, it could have drafted the claim to recite "entirely laterally offset" or a groove "that does not overlap at all" with the chamfered mandrel.

'829

Additionally, the '829 Patent's specification:

- Never states that the groove should be "entirely" offset from the chamfered mandrel;
- Provides no reasoning or benefit of such a configuration; and
- Provides no lexicography or disavowal that could limit the full scope of the claim.

In fact, the specification never even describes the "groove" in words.

IPR2024-00299
Nespresso USA, Inc. Ex. 1075
Page 220 of 265

Intrinsic Evidence: Figure 16 Does Not Number or Identify any Groove

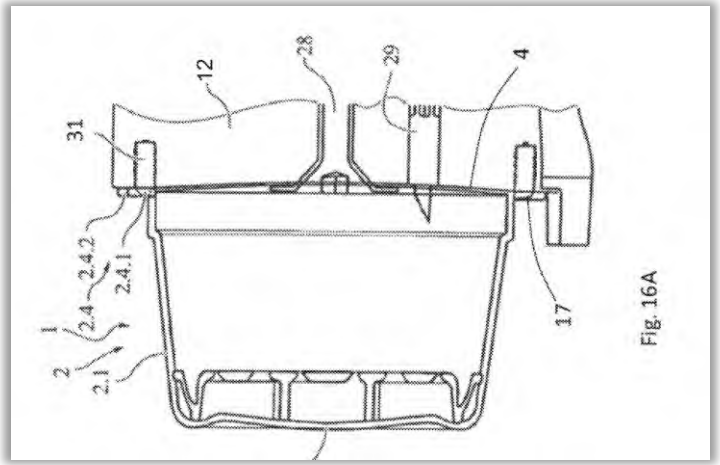

EX1001, '829 Patent, FIG. 16A.

'829

LIST OF REFERENCE NUMERALS

1 portion capsule
2 base element
2.1 wall region
2.2 bottom area
2.3 ring
2.4 edge region
2.4.1 sealing surface
2.4.2 means for friction locking and/or detection
3 cavity
4 membrane, cover foil
5,6 unequal sections
7 recess
8 raised area, bulge
10 electrically conductive coat
11 metallic ring
12 brewing chamber
13 detector, mean for detection
14 beam
16 border
17 flange
20 ferromagnetic material
21 reflective section
22 mat section
23 insertion shaft housing
24 mean for fit locking
25 inner wall
26 insertion shaft
28 water inlet
29 mandrel
30 holding arms
31 seal
32 grooves
34 convexities
36 gearwheel shaped contour

EX1001, '829 Patent, 12:57-13:26.

Reply to POR '829, 27.

IPR2024-00299
Nespresso USA, Inc. Ex. 1075
Page 221 of 265

Extrinsic Evidence Supports Petitioner's Interpretation

"Offset" means two things that are not perfectly aligned:

EX1075: Random House Dictionary, "**Offset**"	"**14.** printed by, or suitable for printing by offset. **15.** placed away from a center line; off-center"
EX1076: Dictionary.com, "**Offset**"	"**3.** placed away from the center line; off-center."
EX1077: Oxford American College, "**Offset**"	"**n.**/…**1.** a consideration or amount that diminishes or balances the effect of a contrary one. **2.** the amount or distance by which something is out of line…"
EX1078: Webster's New World (1980), **"Offset"**	"**adj. 1.** of, relating to, or being an offset; **2.** that is offset, off center, or at an angle…"
EX1079: Webster's New World (1984), "**Offset**"	"**adj. 1.** of, relating to, or being an offset **2.** that is offset, off center, or at an angle…"

'829

"Lateral" confirms that the mis-alignment is sideways in either direction:

EX1080: Concise Oxford Dictionary, "**Lateral**"	" **adj. 1** of, at, towards, or from the sides or sides…"
EX1081: Merriam-Webster's Dictionary, "**Lateral**"	"**1:** of or relating to the side **2:** situated on, directed toward, or coming from the slide **3:** extending from side to side…"
EX1082: Random House Webster, "**Lateral**"	" **adj. 1.** of or pertaining to the side; situated at, proceeding from, or directed to a side: *a lateral view…*"

IPR2024-00299
Nespresso USA, Inc. Ex. 1075
Page 222 of 265

K-Fee Improperly Reads Limitations from a Preferred Embodiment

To the extent FIG16 depicts the claimed groove, it is a single embodiment:

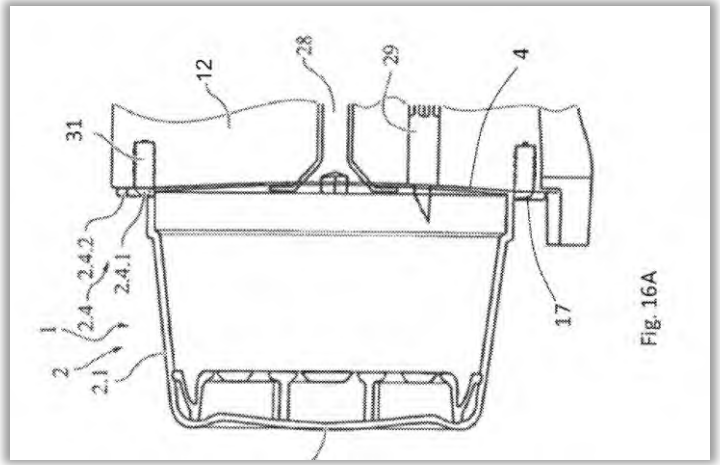

EX1001 '829, FIG. 16A.

'829

"It is improper to read limitations from a preferred embodiment—into the claims absent a clear indication in the intrinsic record that the patentee intended the claims to be so limited."

GE Lighting Solutions, LLC v. AgiLight, Inc., 750 F.3d 1304, 1309 (Fed. Cir. 2014)

"While we read claims in view of the specification, of which they are a part, we do not read limitations from the embodiments in the specification into the claims."

Hill-Rom Servs., Inc. v. Stryker Corp., 755 F.3d 1367, 1371 (Fed. Cir. 2014)

Yoakim Discloses the Claimed Groove/Seal Limitation

Yoakim discloses the claimed groove, as shown in FIG35, depicting the amount of misalignment between the groove (red) and chamfered mandrel with yellow arrows.

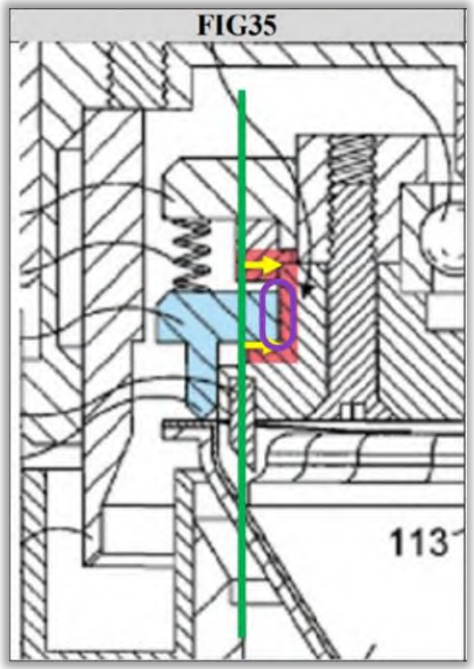

EX1004, FIG. 35 (annotated)

The groove (red), and the area where the seal (blue) sits in the groove, is out of alignment, and at least partially off to the side of the chamfered mandrel.

force of the elastic loading means. The surface **159** can form a cone or "V" for increasing the sealing pressure in a localized area. The engaging portion **157** further comprise an internal base portion **160**. The elastic loading means **158** is thus inserted in a space located between the base portion **160** and a counter-force portion **161** of the engaging part **149**. Therefore, at a rest position, the engaging portion **157** of the valve system keeps closing on the rim of the capsule under the compressive effect of the resilient means **158**.

EX1004, Yoakim, [0436].

'829

Reply to POR '829, 29-30.

Yoakim's Groove/Seal Meets K-Fee's Unclaimed Requirements

Yoakim's groove (red) limits the movement of the seal (blue), providing stability:

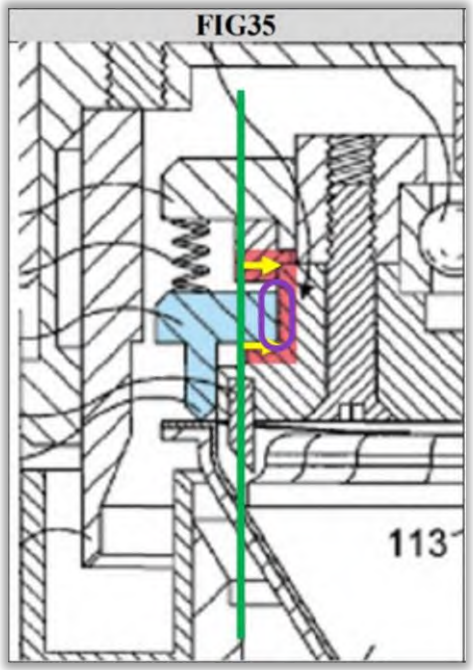

EX1004, FIG. 35 (annotated)

'829

[0385] As a result, the system of the invention provides a solution for preparing a food liquid wherein a controlled release of the food liquid can be carried out. For example, the release of liquid can be delayed until a certain pressure is exerted on the valve means which is sufficient to form a passage for flow of liquid. A delayed opening of the valve means enables to improve the interaction between water and the substance contained in the capsule. For coffee, for example, it may be advantageous to optimize interaction of water and the ground coffee particles to obtain a good extraction of the coffee and aroma compounds. Moreover, the valve means provides a restriction which may improve the creation of foam or coffee crema.

[0386] The valve means can be formed by at least one engaging portion of the device which moves relatively to an engaging portion of the capsule under the effect of the pressurized liquid for making a thin annular laminating passage for the liquid. The engaging portion of the capsule can be, for instance, a radial portion of edge of the capsule. The laminating passage also enables to create a liquid jet of relatively high velocity that impacts on a wall of the device. As a result, a relatively high amount of foam can be created both due to the restriction that is created by the valve means and by the impact of the liquid on the impact surface of the device at a relatively high velocity during centrifugation. Depending on the amount of pressure exerted on the valve means by the centrifuged liquid, the restriction caused by the valve means can differ in amplitude.

[0387] According to an aspect of the invention, at least one of said engaging portions of the valve means is spring loaded to move away relatively to the other engaging portion under the force of the centrifuged liquid. In particular, the engaging portion of the device can be associated to a spring loading member. For instance, the spring loading member is a rubber elastic member or a mechanical spring. The spring loading member can be an O-ring, an helicoidal or blade-type spring or any equivalent means.

[0388] For example, the engaging portion of the valve means can also comprise an annular pressing edge which is arranged to seal on the engaging portion of the capsule. The pressing edge may take different forms such as a V, W or U shape in order to exert a sufficient sealing pressure on the capsule when the pressure of liquid is still under a predetermined threshold.

[0436] According to one aspect of the invention, the water injection subassembly **129** further comprises a valve system **156** for controlling the flow of liquid that is discharged from the device. The valve system **156** can be arranged on the capsule rotary engaging part **149** in the form of an annular engaging portion **157** which is biased under the force of elastic loading means **158** such as springs. The annular engaging portion **157** includes a pressing peripheral surface **159** which applies a closing force on the peripheral rim **104** of the capsule to be able to restrict the flow of liquid under the force of the elastic loading means. The surface **159** can form

EX1004, Yoakim, [0385]-[0386],[0436].

Reply to POR 829, 30.

Yoakim's Groove/Seal Meets K-Fee's Unclaimed Requirements

Despite K-Fee's arguments, Yoakim's groove/seal provides the same purported benefit that K-Fee identifies—improving the interaction between the water and the capsule substance.

[0251] As a result, the system of the invention provides a solution for preparing a food liquid wherein a controlled release of the food liquid can be carried out. For example, the release of liquid can be delayed until a certain pressure is exerted on the valve means. A delayed opening of the valve means enables to improve the interaction between water and the substance contained in the capsule and reduces the risk of the flow blocking in the capsule.

EX1004, Yoakim, [0251]

[0385] As a result, the system of the invention provides a solution for preparing a food liquid wherein a controlled release of the food liquid can be carried out. For example, the release of liquid can be delayed until a certain pressure is exerted on the valve means which is sufficient to form a passage for flow of liquid. A delayed opening of the valve means enables to improve the interaction between water and the substance contained in the capsule. For coffee, for example, it may be advantageous to optimize interaction of water and the ground coffee particles to obtain a good extraction of the coffee and aroma compounds. Moreover, the valve means provides a restriction which may improve the creation of foam or coffee crema.

EX1004, Yoakim, [0385]

'829

PGR '829, 39-60; Reply to PGR '829, 30.

IPR2024-00299
Nespresso USA, Inc. Ex. 1075
Page 226 of 265

226 | DEMONSTRATIVE – NOT AN EXHIBIT

Any Minor Differences in the Groove/Seal Configuration of Yoakim Would be Trivial

"The Board, in reversing the examiner's rejections, relied only on minor distinctions between the prior art and the claimed invention."

"But such a distinction reads the teaching of [the prior art] too narrowly."

PlaSmart, Inc. v. Kappos, 482 F. App'x 568, 573 (Fed. Cir. 2012)

'829

Reply to POR '829, 30.

The Claimed Groove Configuration Would also be Obvious

307. It would have been obvious to one skilled in the art to position a sealing member in a groove to solidify the placement of the seal and improve its sealing stability and strength. Furthermore, it would have been obvious to one skilled in the art to utilize a groove and seal configuration in the brewing head of the centrifugal brewing unit in order to achieve "the advantage of a control of the pressure of liquid exerted in the capsule at the level of the device," as well as "optimize interaction of water and the ground coffee particles to obtain a good extraction of the coffee and aroma compounds," and "improve the creation of foam or coffee crema." (Ex. 1004 at [0384]-[0385].

EX1003 '829, ¶ 307

'829

Reply to POR '829, 30.

Ledge

’830 Patent

DEMONSTRATIVE – NOT AN EXHIBIT

“Ledge” Limitations

’830 Patent

Claim [1.g]: “**a ledge** formed at the inside surface of the wall and projecting towards the central longitudinal axis, **the ledge** is spaced below the open end of the base element”

EX1001 ’830 claim [1.g]

Claim 9: “The portion capsule according to claim 8, wherein the inside surface of the wall comprises **a ledge** projecting towards the central longitudinal axis, and the optically detectable individualization identifier is circumferentially arranged around the central longitudinal axis.”

EX1001 ’830 claim 9

’830

Pet. ’830, 53-54, 78.

“Ledge” Is Illustrated, Not Described, in Specification

‘830 Patent :

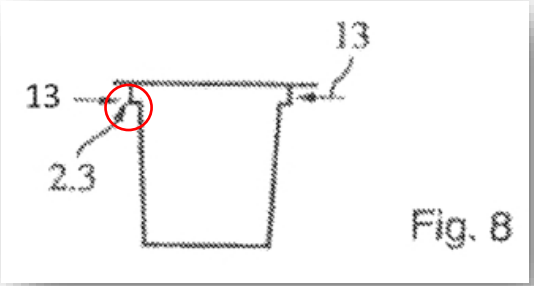

EX1001 ’830, Fig. 8

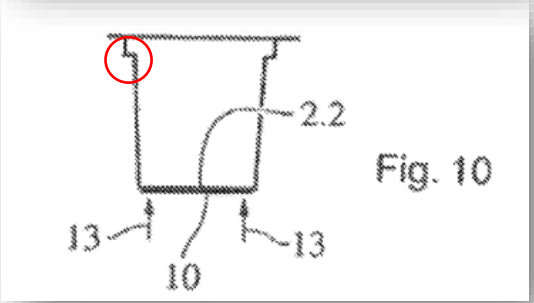

EX1001 ’830, Fig. 10

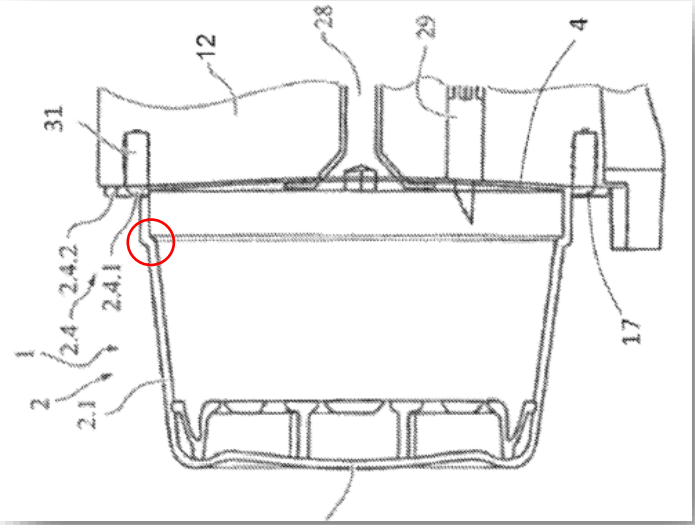

EX1001 ’830, Fig. 16A

’830

Reply to POR 830, 22-30.

The "Ledge" Protrudes Toward the Central Axis and Is Below the Open End, as Claimed

Rim at open end of base element (1h)
See EX1004, [0414]

Ledge formed on the inside surface of the wall (1g)
See EX1004, [0420]

Inside surface of side wall faces the beverage material (1e)
See EX1004, [0414]-[0415]

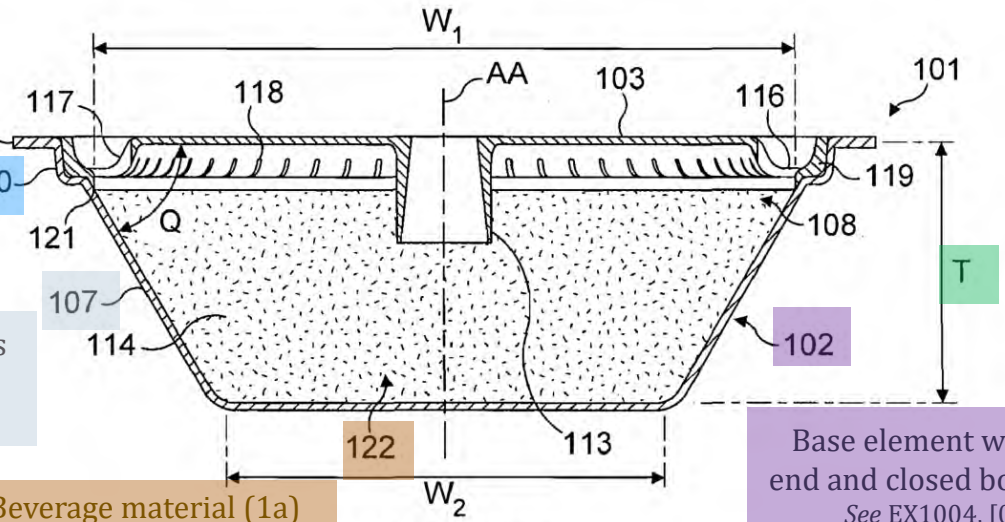

FIG. 28

Height of base element defined between open end and closed bottom
See EX1004, [0417]

Base element with open end and closed bottom (1c)
See EX1004, [0414]

Beverage material (1a)
See EX1004, [0415]

EX1004, Fig. 28 (annotated)

'830

Pet. '830, 50-51, 53-54; Reply [illegible] 27.

Yoakim's Ledge Is Configured Like Those in the '830 Patent

Yoakim:

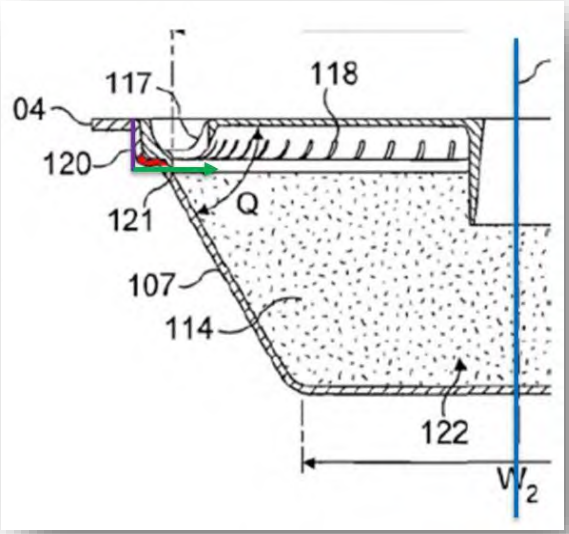

EX1004, Fig. 28 (close up and annotated)

'830 Patent :

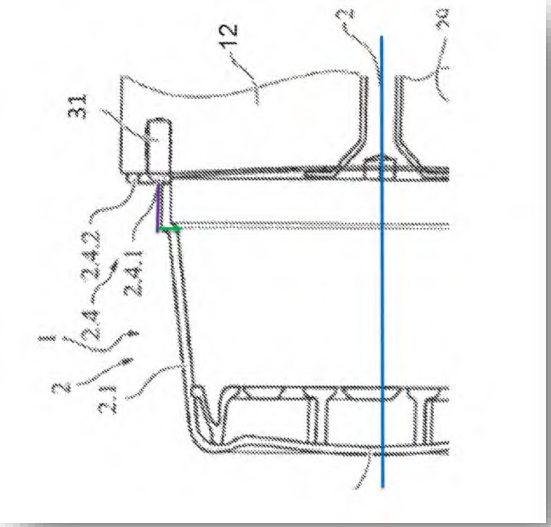

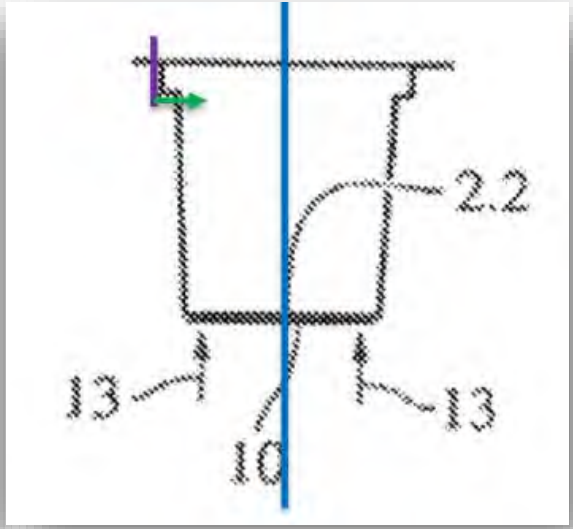

EX1001 '830, Figs. 10 and 16A (both annotated)

Capsule wall(purple)
Direction of ledge projection from the wall (green)
Central axis (blue)

'830

Reply to POR '830, 27-28.

Yoakim Discloses the Claimed "Ledge"

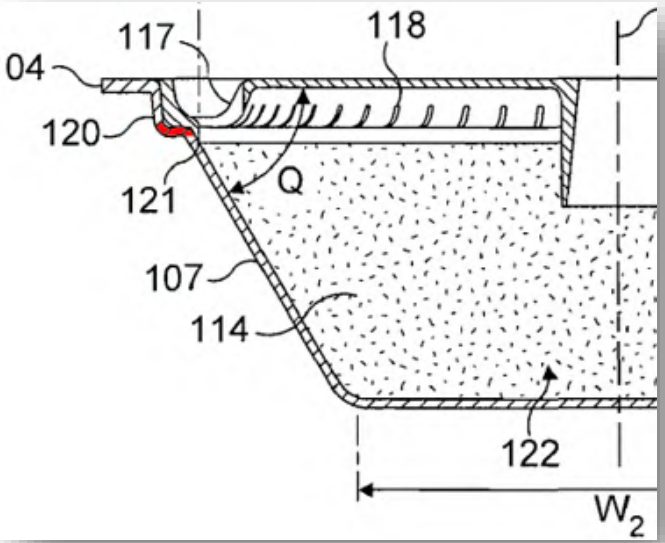

EX1004, Fig. 28 (annotated and close up)

[0420] The collecting recess **116** forms a peripheral annular groove of small depth, e.g., between 2 and 10 mm to allow the introduction of piercing members through the sealing foil to produce outlets for the brewed liquid which is produced in the capsule as will explained later in the description. The collecting recess is open upwardly toward the sealing membrane which seals it. The collecting recess **116** further comprises an outer peripheral portion **119** forming an edge bearing onto a seat portion **120** of the dished body. The outer portion **119** can be engaged in the seat portion **120** by a more or less tight fit engagement. An additional sealing portion **121** extending

EX1004, [0420]

The “Ledge” Is Inside the Capsule, as Defined by the Membrane

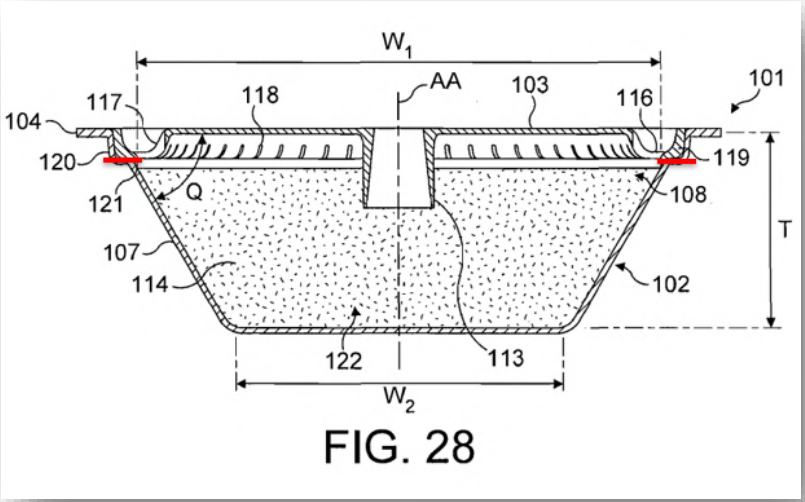

FIG. 28

EX1004, Fig. 28 (annotated)

[0414] As shown in FIGS. **26** and **27**, a preferred capsule **101** of the invention generally comprises a dished body **102** onto which is sealed a sealing foil **103**. The sealing foil **103** is sealed onto a peripheral rim **104** of the body at a sealing annular portion **105**. The rim **104** can extend outwards form-

EX1004, [0414]

’830

The “Ledge” Projects Toward the Central Axis

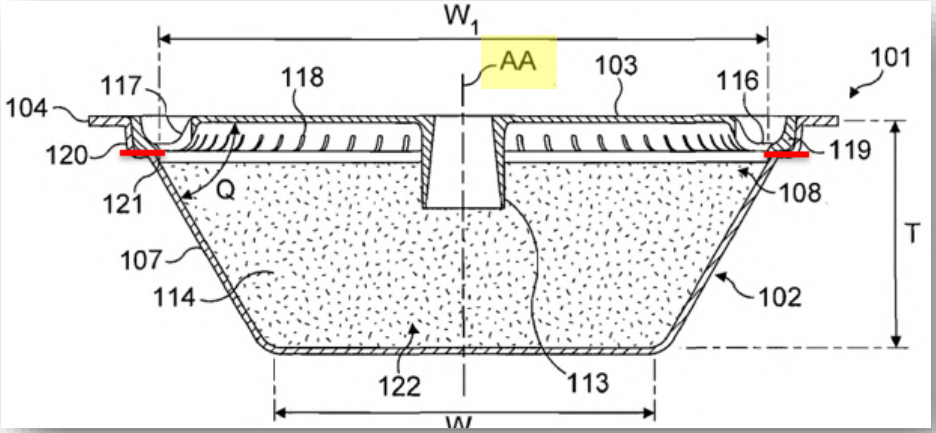

EX1004, Fig. 28 (annotated)

Jobin:

Q. So looking at Figure 28, how do you know that the ledge is projecting towards the line that is AA?

[...]

So this ledge feature would be starting at the inside wall and then projecting toward the access. So in this section view on the left side, it's projecting right towards the axis, and then as you circulate around, it's always pointing towards the axis. So that's attempting to describe the feature that is formed starting at the inside wall and projecting inward.

EX2025, 194:25-197:17

’830

A POSITA Would Be Aware of the Benefits of a "Ledge"

Jobin:

243. Furthermore, it would have been obvious to a person of ordinary skill in the art to utilize the claimed ledge configuration in a centrifugal brewing capsule to provide a space for brewed coffee to gather before exiting the capsule into the user's cup, which advantageously promotes homogeneous flow of the beverage out of the capsule in the space. (Ex. 1004 at [0332] ("Preferably, a collecting recess is provided

EX1003 '830, ¶243

[0332] Preferably, a collecting recess is provided downstream of the outlet openings of the enclosure to collect the liquid exiting the enclosure in a homogeneous flow. The collecting recess is also preferably an annular portion placed at the periphery of the capsule. The collecting recess is preferably closed on one side by the internal portion of wall and at another side by the sealing foil.

EX1004,[0332]

'830

Capsules Utilizing a Ledge Were Well-Known to a POSITA

Jobin:

244. It would also have been obvious to a person of ordinary skill in the art to utilize the claimed ledge configuration as an obvious design choice, as capsules utilizing a ledge were well-known to those skilled in the art. *See* Ex. 1010, FIGs. 14-15; Ex. 1021, FIG. 7; Ex. 1033, FIGs. 1-8.

EX1003 '830, ¶244

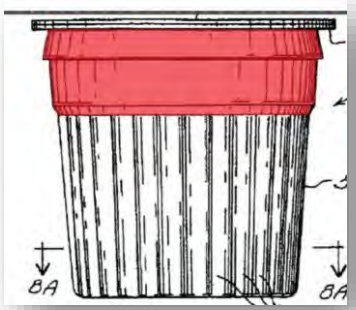

EX1033, Fig. 8A (annotated)

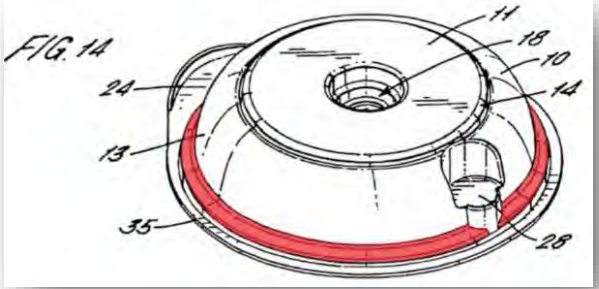

EX1010, Fig. 14 (annotated)

'830

K-Fee Mischaracterizes What Petitioner Identifies as a "Ledge"

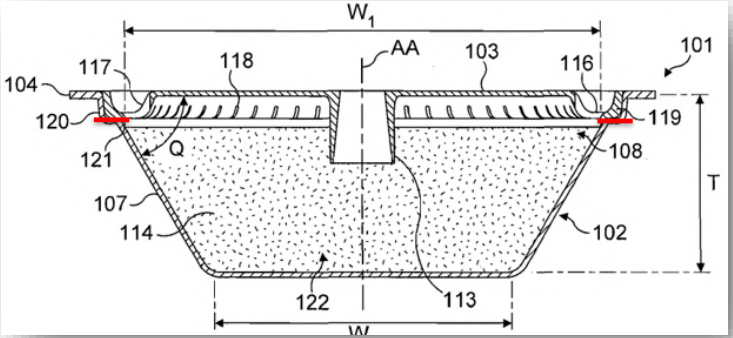

EX1004, Fig. 28 (annotated)

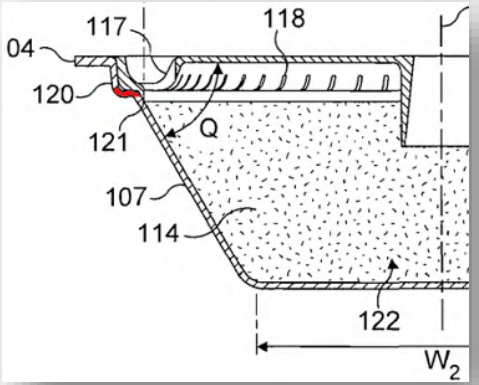

EX1004, Fig. 28 (annotated and close up)

From annotated Fig. 28 above, it is clear that 119 (the outer peripheral portion described in Ex.1004 at [0420] and that is relied on by Petitioner for the ledge) as well as 117 are not part of the inside wall of the capsule and instead are part of the lid of the capsule. Mr. Jobin confirmed that the outer peripheral region 119 is located

NOT THE PETITION'S MAPPING

POR '830, 65.

'830

Pet. '830, 53-54, 70; Replies to POR '830, 25-32

K-Fee's Inconsistent Frame of Reference for "Ledge"

K-fee's "ledge" infringement interpretation

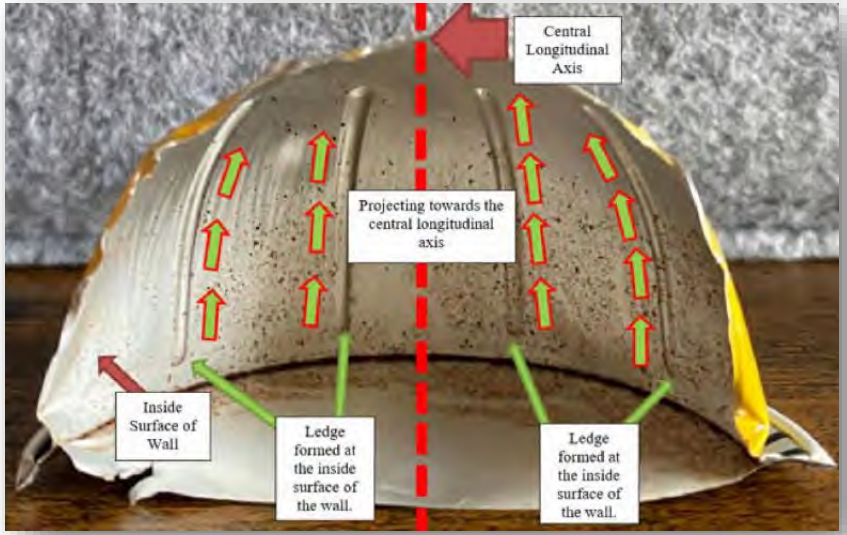

EX1049 '830, 144-146.

K-fee's POR

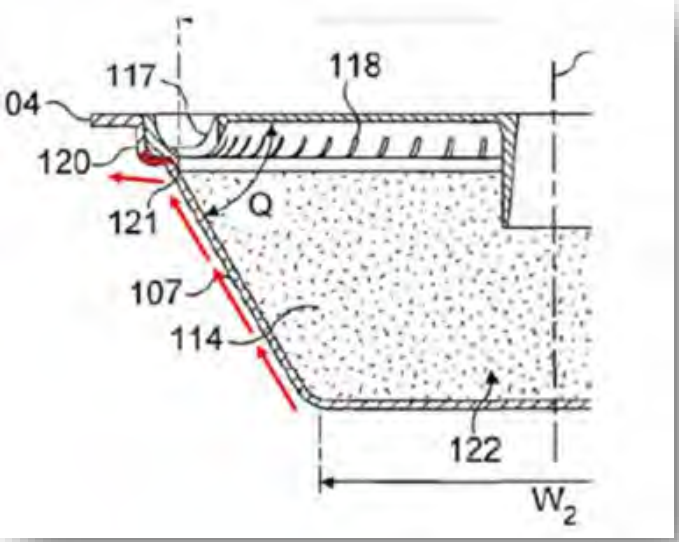

POR '830, 69.

'830

Reply to POR '830, 29.

Yoakim's Ledge is Formed on the Capsule Wall's "Inside Surface"

- Yoakim's discloses deep drawn capsules, which are stamped from a sheet of material into a cup-shaped body with side walls **(107)** having an inner surface facing beverage material (**122)** and an outer surface facing away from it.

- It is the membrane (103) which delineates the interior of the capsule from the outside, not the lid (108) – which is optional.

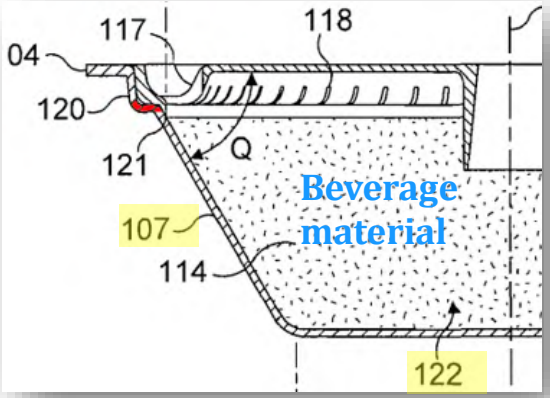

EX1004, Fig. 28 (annotated and close up)

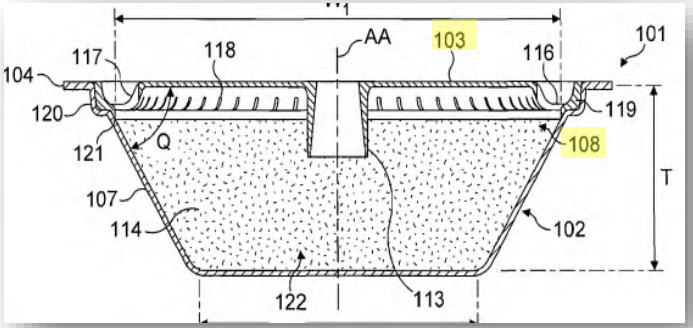

EX1004, Fig. 28 (annotated)

'830

IPR2024-00299
Nespresso USA, Inc. Ex. 1075
Page 241 of 265
241 | DEMONSTRATIVE – NOT AN EXHIBIT

Parts of the “Inside Surface” May Not Contact Beverage Material

Coffee capsules can be filled with different beverage material amounts

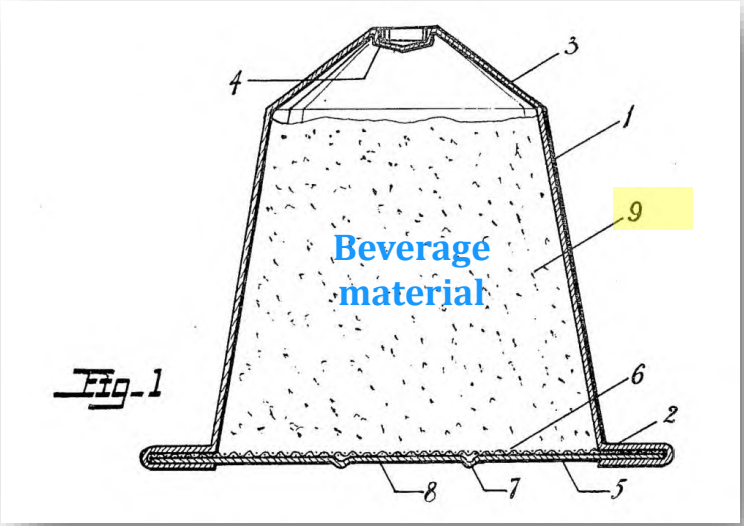

EX1018, Fig. 1 (annotated)

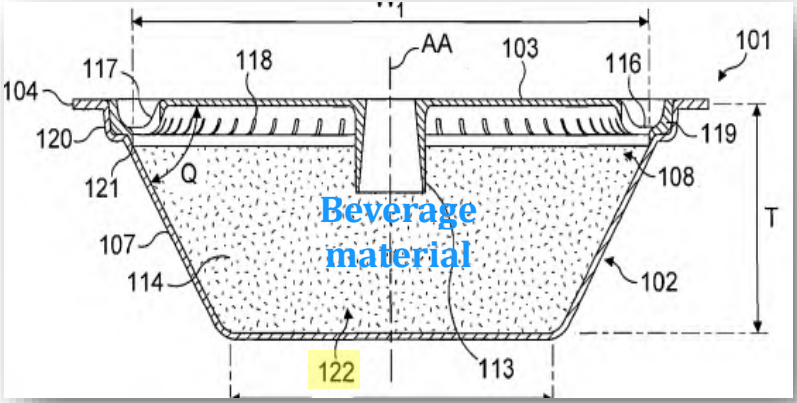

EX104, Fig. 28 (annotated)

’830

Level of Skill of the POSITA

’722, ’829, ’830, and ’910 Patents

DEMONSTRATIVE – NOT AN EXHIBIT

Level of Skill of the POSITA

Level of Skill for Prior Related IPRs, K-Fee Agreed

IPR2022-01574, POR (Paper 17), 9; IPR2023-00485, POPR (Paper 6), 18;IPR2023-00502, FWD, 9; IPR2023-00485, FWD, 8.

POSITA

- Bachelor's degree in engineering
- Five years of experience in design of mechanical beverage systems, or similar products
- Experience with sensors for recognizing an identifier

’722	’829
’830	’910

Reply to POR ’722, 3; Reply to POR ’829, 3; Reply to POR ’830, 3; Reply to POR ’910, 2-3.

K-Fee Now Advocates to Re-Define Level of Skill

POSITA

- Five years of experience in design of mechanical beverage systems, or similar products
- Experience with sensors for recognizing an identifier
- Bachelor's degree in engineering

Pet. '722, 15-16; Pet. '829, 17; Pet. '830, 16-17; Pet. '910, 16

K-Fee's New POSITA Proposal

- Five years of technical experience
- One year of experience in designing, testing, and/or evaluating single-serve coffee/beverage makers
- Working knowledge of identifying means such as barcodes, sensors, etc.

POR '722, 3-4; POR '829, 4-5; POR '830, 4; POR '910, 4.

'722	'829
'830	'910

Reply to POR '722, 3; Reply to POR '829, 3; Reply to POR '830, 3; Reply to POR '910, 2-3

IPR2024-00299
Nespresso USA, Inc. Ex. 1075
Page 245 of 265

There is No Support for Changing the POSITA Definition

K-fee Offers No Basis to Justify Departure—Both Experts' Opinions Remain Unchanged

11. Accordingly, I disagree with Mr. Glucksman and K-fee's proposed level of ordinary skill in the art. I have seen nothing presented by K-fee or Mr. Glucksman in this proceeding that justifies the level of ordinary skill they now propose or a departure from the level of ordinary skill in the art the Board adopted in its institution decision.

12. Notwithstanding anything above, I have considered the prior art cited and opinions provided in my original declaration (Ex. 1003) in view of K-fee's new proposed level of ordinary skill in the art, and, like Mr. Glucksman, my opinions would not change and would apply equally should the Board adopt this new proposed level of skill. (Ex. 2020 at ¶ 47). Additionally, I would qualify as a person

EX1072, ¶¶11-12 (same in all four IPRs)

47. Nevertheless, my opinions below regarding the understanding of a POSITA in this proceeding would not change based on the level of ordinary skill offered by Petitioner or Patent Owner and would apply equally under both proposed levels of ordinary skill.

EX2020, ¶47.

Reply to POR '722, 3; Reply to POR '829, 3; Reply to POR '930, 3; Reply to POR '910, 2-3.

Jobin Is a POSITA Under Either Definition

Prior POSITA Definition

40. Based on these factors together with my experience, it is my opinion that a person of ordinary skill in the art relevant to the '829 Patent would be a person with at least a bachelor's degree in engineering plus five years of experience in design of mechanical beverage systems, or similar products. I understand that in IPR2022-01574 (over U.S. Patent 11,254,491), the Board adopted this definition in its Institution Decision, but also included "experience with sensors for recognizing an identifier" in the definition. I agree with the Board that a POSITA would also have this experience. I had those capabilities myself as of the July 22, 2010 filing date of K-fee's earliest filing in the '829 Patent family. In particular, I met the educational requirement and was actively designing beverage systems and other types of fluid systems and consumer products with comparable elements to the subject matter of the '829 Patent. As detailed above, I also have experience with sensors for recognizing an identifier. I consider myself a person having skill in the art as of before July 22, 2010. Accordingly, my opinions contained herein are based on this level of ordinary skill in the art at the time of the invention.

EX1003, '829, ¶40;
see also EX1003, '722, ¶40, EX1003, '830, ¶40, EX1003, '910, ¶40.

K-Fee's New Proposal

proposed level of skill. (Ex. 2020 at ¶ 46). Additionally, I would qualify as a person of ordinary skill in the art under K-fee's new proposal because I have the relevant technical experience, including with respect to designing single-serve beverage makers (such as wine, water, beer, chilled alcohol, and frozen drink dispensing machines) and product identifiers (such as barcodes and optical sensors) and based on my extensive experience testing and evaluating single-serve coffee capsules and machines.

EX1072 '710, ¶12
See also EX1072 '829, ¶12; EX1072 '830, ¶12; EX1072 '829, ¶12.

'722	'829
'830	'910

Pet. '722, 15-16; Pet. '829, 17; Pet. '[illegible] 16;
Reply to POR '722, 3; Reply to POR '829, 3; Reply to POR '830, 3; Reply to POR '910, 2-3

IPR2024-00299
Nespresso USA, Inc. Ex. 1075
Page 247 of 265

Glucksman's Testimony Should be Afforded Little Weight

'722, '829, '830, and '910 Patents

DEMONSTRATIVE – NOT AN EXHIBIT

Glucksman's Testified That He Did Not Understand the Terms "Enable" or "Enablement" After Providing Enablement Opinions

Q Do you understand this patent to be enabled?

MR. BROOKS: Objection.

A I don't understand the term "enable," I apologize.

Q You don't understand the term enablement?

A No.

EX1071, 65:17-66:2

Accordingly, Glucksman's prior art enablement opinions should be given little to no weight.

'722	'829
'830	'910

Reply to POR '722, 2; Reply to POR '829, 2; Reply to POR '830, 2; Reply to POR '910, 1-2

Glucksman's Obviousness Analysis Improperly Required Element-by-Element Motivations Within a Reference

Q When evaluating the complete disclosure of Yoakim, in combination with Jarisch or another reference, are you saying there needs to be a motivation to combine Yoakim's embodiments with one another?

A I believe so. I believe that a person skilled in the art would have to be convinced that there is a motivation to combine different -- different embodiments and it would be the -- the patent -- you know, the -- the -- the drafter of the patent to explain why such have to be -- are combinable.

EX1071, 87:17-88:4

"**This analysis unduly dissects prior art references into collections of individual elements**, requiring a party showing obviousness to **re-do the work already done in the prior art reference.** The claimed invention and **an invention in the prior art must both be analyzed as a whole** for the same reason: an invention is more than the sum of its individual elements"

Gen. Elec. Co. v. Raytheon Tech. Corp., 983 F.3d 1334 (Fed. Cir. 2020)

'722	'829
'830	'910

Glucksman Did Not Apply the *Phillips* Claim Construction Standard

Glucksman testified that his understanding of claim terms was not informed by anything other than his reading of the claim language

Q How did you determine the meaning of the words in the claim across the four patents?

A Well, the meaning was -- you know, the meaning was clear to me when I read -- when I read the claim language.

Q And what did you use to inform yourself as to whether those -- the meaning was clear?

A My understanding of the words.

Q Did you consider anything else to determine the meaning of the claims?

A No. I didn't.

EX1071, 89:11-22 (objection omitted)

Q Were you using the plain and ordinary meaning of the terms when you were evaluating the claims?

A Was I using the plain?

Q And ordinary meaning of the terms when you were evaluating the claims?

A Yes.

Q Okay. And what informed your understanding of the plain and ordinary meaning of the terms? Anything?

A No.

EX1071, 90:10-20

’722	’829
’830	’910

Reply to POR ’722, 2; Reply to POR ’829, 2; Reply to POR ’830, 2; Reply to POR ’910, 1-2

Glucksman's Analyses Based on Incorrect Claim Construction and Obviousness Legal Standards Should Be Disregarded

*"The testimony of a patent expert based on an **obviously incorrect legal analysis is not evidence** adequate to support [K-fee's non-obviousness arguments]"*

Texas Instruments Inc. v. Cypress Semiconductor Corp.
5 F. 3d 1504 (Fed. Cir. 1993) (emphasis added)

In contrast to Glucksman, Jobin applied the correct obviousness standard and interpreted the challenged claims under *Phillips*

'722	'829
'830	'910

Glucksman Could Not Answer Basic Questions About K-fee's Patents During His Deposition

Questions like:

Q So, is it your opinion that the '910 patent discloses a coffee capsule that is free of a filter inside of the cavity?

A I was not asked to opine on that. I only -- I was shown the claim and the claim clearly requires that the capsule be free of a filter.

Q Have you read the specification?

A I have -- I read the specification.

Q Did you evaluate, in the specification, whether or not the coffee system disclosed in the '910 patent discloses a capsule that's free of a filter?

A I -- I can't -- I do not -- I do not recall whether it does or does not.

EX1071, 105:14-22

Q Do you understand how the coffee system disclosed in the '910 patent operates?

MR. BROOKS: Object to form.

A Okay. So, my understanding of the '910 patent is that it is particularly directed to a identifier on the capsule. You know, a capsule identifier.

Q Uh-huh. Okay.

So, what I want to understand is, in using the system disclosed in the '910 patent, how would it operate with a capsule that's free of a filter inside of the cavity?

MR. BROOKS: Object to form.

A I really didn't -- I did not form an opinion in that respect.

EX1071, 112:5-16

'722	'829
'830	'910

Reply to POR '722, 2; Reply to POR '829, 2; Reply to POR '830, 2; Reply to POR '910, 1-2

Glucksman Could Not Answer Basic Questions About K-fee's Patents During His Deposition

Questions like:

Q Which is, do the claims require a capsule that has an identifier both on the bottom of the flange and on the side wall? It's a yes-or-no question.

A And I truly understand it's a yes-or-no question. And it requires that I understand the -- it -- I'm -- I'm really -- I don't feel qualified to answer that question because I can see where these two things are mentioned in a claim, and I -- I'm not qualified -- I don't feel myself being qualified to answer this question in a yes-or-no manner. Sorry.

EX1071, 112:5-16

'722	'829
'830	'910

Reply to POR '722, 2; Reply to POR '829, 2; Reply to POR '830, 2; Reply to POR '910, 1-2

Additionally, Glucksman Has Repeatedly Taken Positions Plainly Inconsistent with the Teachings in the Art in these Proceedings

*"However, we **must disregard** the testimony of an expert that is **plainly inconsistent with the record**…or 'based on **incorrect understanding of the claim[s.]**'"*

Houseware LLC v. Whirlpool Corp., 865 F.3d 1372, 1378 (Fed. Cir. 2017) (emphasis added)(internal citations omitted)

'722	'829
'830	'910

Reply to POR '722, 2; Reply to POR '829, 2; Reply to POR '830, 2; Reply to POR '910, 2

POSITA Has Experience Developing Beverage and Fluid Systems With Sensors For Recognizing an Identifier

POSITA

- Bachelor's degree in engineering
- Five years of experience in design of mechanical beverage systems, or similar products
- Experience with sensors for recognizing an identifier

’722	’829
’830	’910

Reply to POR ’722, 3; Reply to POR ’829, 2-3; Reply to POR ’830, 2-3; Reply to POR ’910, 2

Glucksman Lacks Experience with Beverage Systems Integrating Identifiers

The only specific sensor experience Glucksman describes:

22. In addition, I have years of experience with sensors for recognizing identifiers, including RFID interrogation devices or other machine readable indicia readers (such as those used to read and recognize alphanumeric text, barcodes, security inks, etc.). I utilized such sensors and identifiers to develop a smartphone-based beverage system, which I patented. US Pat. No. 11,565,930 (issued January 11, 2023).

Yet, when he was asked about his own patent:

Q But this system does not have any kind of optical sensor for reading a code integrated into the device; is that right?

A This system does not. I believe that it does not because the claimed aspect of it was that the sensor is remote.

Q Who developed the capsule identification system?

A The capsule identification system was really not developed, per se.

Q What do you mean by that?

A What I meant to say is barcodes and sensors are known, and, therefore, the -- at the time that this patent was drafted and submitted, we did not focus on the specific development of the barcode or the sensor.

’722	’829
’830	’910

EX2020 ’710, ¶22
See also EX2020 ’829, ¶22; EX2020 ’830, ¶22; EX2020 ’829, ¶22

EX1071, 61:19-62:6, 63:20-64:3
Reply to POR ’722, 2-3; Reply to POR ’829, 2-3; Reply to POR ’830, 2-3; Reply to POR ’910, 2

IPR2024-00299
Nespresso USA, Inc. Ex. 1075
Page 257 of 265

In Contrast, Jobin Has Ample Experience with Sensors for Recognizing an Identifier

proposed level of skill. (Ex. 2020 at ¶ 46). Additionally, I would qualify as a person of ordinary skill in the art under K-fee's new proposal because I have the relevant technical experience, including with respect to designing single-serve beverage makers (such as wine, water, beer, chilled alcohol, and frozen drink dispensing machines) and product identifiers (such as barcodes and optical sensors) and based on my extensive experience testing and evaluating single-serve coffee capsules and machines.

EX1072, ¶12 (same for all four IPRs)

24. For a major beer company, I worked on many aspects of a home-based beer dispenser system, with a special focus on identification technologies to prevent counterfeit or unlicensed beer cartridges. A range of solutions were analyzed, including cartridge shapes, ribs, grooves, bosses, receptacles, barcodes, RFID tags, and associated sensors like switches, optical sensors and antennas.

25. In 2012, I cofounded 908 Devices Inc. to develop portable chemical detection instrumentation. Here I have developed various instruments with applications in pharmaceutical research, forensics and hazardous material identification at the point of need. These instruments include complex fluid handling systems, custom pumps, fluid cartridges, custom heaters for sample heating and an integrated bar code scanner for reagent and cartridge identification. *See* U.S. Pat. Nos. D703,074;

EX1003, ¶¶24 & 25 (same for all four IPRs)

'722	'829
'830	'910

Reply to POR '722, 3; Reply to POR '829, 2-3; Reply to POR '830, 2-3; Reply to POR '910, 2

Jobin's Opinions Should Be Afforded Greater Weight

	Glucksman	Jobin
Properly analyzed the prior art in view of the claims, applying the correct legal standards	✗	✓
Interpreted claims under *Phillips*	✗	✓
Taken positions that are consistent with the prior art	✗	✓
Has experience with beverage and fluid systems integrating identifiers	✗	✓

'722	'829
'830	'910

Reply to POR '722, 3; Reply to POR '829, 2-3; Reply to POR '830, 2-3; Reply to POR '910, 2

IPR2024-00299
Nespresso USA, Inc. Ex. 1075
Page 259 of 265

District Court Claim Construction

’722 Patent, ’829 Patent, ’830 Patent and ’910 Patent

DEMONSTRATIVE – NOT AN EXHIBIT

District Court Proposed Claim Constructions

"an identifier"

K-fee's Construction	Nespresso's Construction
Plain and ordinary meaning	"feature that individualizes the portion capsule"

"to individualize the portion capsule"

K-fee's Construction	Nespresso's Construction
Plain and ordinary meaning	"to determine whether the respective portion capsule is suitable for use with the beverage machine such that the use of unsuitable capsules is prevented"

EX1070, 5-7

'722	'829
'830	'910

Reply to POR '722, 1 fn. 1; Reply to POR '829, 1 fn. 1; Reply to POR '830, 1 fn. 1; Reply to POR '910, 1 fn. 1

The District Court Construed the Terms Consistent with Nespresso's Proposals

For the foregoing reasons, the Court would construe both "identifier" and "individualization identifier" to mean "an element used to determine whether portion capsules are suitable for the machine." This construction gives purpose to the claimed invention. '829 Patent at 1:22-24 ("The object of the present invention is therefore to provide a portion capsule which only is suitable for a specific coffee machine.") Constructions should be consistent with the purpose of the claimed invention. *See Virnetx, Inc. v. Cisco Sys., Inc.*, 767 F.3d 1308, 1318 (Fed. Cir. 2014). The construction is somewhat consistent with Nespresso's proposal; however, the

EX1070, 6

'722	'829
'830	'910

Reply to POR '722, 1 fn. 1; Reply to POR '829, 1 fn. 1; Reply to POR '830, 1 fn. 1; Reply to POR '910, 1 fn. 1

The Petitions Demonstrated the Prior Art Disclosed the Limitations Under These Constructions

In district court, Nespresso proposed that "identifier" be construed as a "feature that individualizes the portion capsule" and "individualize" be construed as "to determine whether the portion capsule is suitable for use with the beverage machine such that the use of unsuitable capsules is prevented." K-fee proposed "plain and ordinary meaning." As explained below, the prior art discloses and/or renders obvious this limitation under either construction.

Pet. '829, 21
See also Pet. '722, 21; Pet. '830, 22-23; Pet. '910, 20

The Patent Owner Responses do not address Petitioner's arguments under the alternative constructions and, as such, any arguments are now waived

'722	'829
'830	'910

Reply to POR '722, 1 fn. 1; Reply to POR '829, 1 fn. 1; Reply to POR '830, 1 fn. 1; Reply to POR '910, 1 fn. 1

No Terms Require Construction

The Board determined that no claims require express construction. Institution Decision ("ID"), 18-19. Under *Phillips v. AWH Corp.*, claim terms "are generally given their ordinary and customary meaning." 415 F.3d 1303, 1312 (Fed. Cir. 2005).

POR '910, 3
See also POR '722, 3; POR '829, 3; POR '830, 3

'722	'829
'830	'910

Reply to POR '722, 3; Reply to POR '829, 3; Reply to POR '830, 3; Reply to POR '910, 2

The District Court's Construction of "Identifier" and "Individualize"

Limitation	K-fee's Proposed Construction	Nespresso's Proposed Construction	Judge Wu's Construction
"Identifier" / "Individualization identifier"	Plain and ordinary meaning	"feature that individualizes the portion capsule"	"an element used to determine whether portion capsules are suitable for the machine"
"to individualize the portion capsule"	Plain and ordinary meaning	"to determine whether the respective portion capsule is suitable for use with the beverage machine such that the use of unsuitable capsules is prevented"	"associating portion capsules with a group of portion capsules that are suitable for the machine"

EX1070, 5-8, 14

'722	'829
'830	'910

Reply to POR '722, 1 fn. 1; Reply to POR '829, 1 fn. 1; Reply to POR '830, 1 fn. 1; Reply to POR '910, 1 fn. 1
PO Sur-Reply '722, 1 fn. 2; PO Sur-Reply '829, 1 fn. 2; PO Sur-Reply '830, 1 fn. 2; PO Sur-Reply '910, 1 fn. 2

IPR2024-00299
Nespresso USA, Inc. Ex. 1075
Page 265 of 265