UNITED STATES PATENT AND TRADEMARK OFFICE

BEFORE THE PATENT TRIAL AND APPEAL BOARD

Intelligent Wellhead Systems, Inc.
Petitioner,

v.

Downing Wellhead Equipment, LLC
Patent Owner

IPR2024-00300
Patent No. 11,560,770

PETITION FOR *INTER PARTES* REVIEW OF U.S. PATENT NO. 11,560,770

TABLE OF CONTENTS

I. INTRODUCTION 1

II. MANDATORY NOTICES 1

A. REAL PARTIES-IN-INTEREST 1

B. RELATED MATTERS 1

C. LEAD AND BACKUP COUNSEL 2

D. SERVICE INFORMATION 2

III. PAYMENT OF FEES 3

IV. GROUNDS FOR STANDING 3

V. INDENTIFICATION OF CHALLENGE 3

VI. TECHNOLOGY BACKGROUND AND PRIOR ART 4

A. *KRUPA* 4

B. *CARR* 6

C. *BEUTERBAUGH* 7

D. *JACKSON* 8

E. *TOLMAN* 8

VII. PERSON OF ORDINARY SKILL IN THE ART 8

VIII. OVERVIEW OF THE ’770 PATENT 9

A. SUMMARY 9

B. ’770 PROSECUTION SUMMARY 9

C. CLAIM CONSTRUCTION 12

IX. THE CHALLENGED CLAIMS’ PRIORITY DATE IS MAY 17, 2021 12

X. DETAILED EXPLANATION OF THE GROUNDS 16

A. GROUNDS 1 AND 2-KRUPA ANTICIPATES OR RENDERS OBVIOUS ALL CLAIMS 17

1. INDEPENDENT CLAIMS 1, 14, 27 20

2. CLAIMS 2, 15, 28 26

3. CLAIMS 3, 16, 29 30

4. CLAIMS 4, 17, 30-"wherein the one or more conditions include one or more flow rate conditions." 35

5. CLAIMS 5, 9, 18, 22, 31-"wherein the fluid communicated via the manifold has satisfied the one or more flow rate conditions when …" and "determining" same 37

6. CLAIMS 6, 19, 32-"wherein the fluid communicated via the manifold has not satisfied the one or more flow rate conditions when a flow rate of the fluid is above an upper threshold or below a lower threshold." 38

7. CLAIMS 7, 20-"pumping the fluid into the manifold." 39

8. CLAIMS 8, 21-"determining that the fluid communicated via the manifold has satisfied the one or more conditions." 41

9. CLAIMS 10, 13, 23, 26, 35, AND 38-"wherein the fluid communicated via the manifold is hydraulic fracturing fluid." 42

10. CLAIMS 11, 24, 36-"wherein: the first valve is a first zipper valve; and/or the second valve is a second zipper valve." 43

11. CLAIMS 12, 25, 37 44

12. CLAIM 33-"further comprising the manifold." 45

13. CLAIM 34-"further comprising one or more pumps; wherein the one or more controllers are further configured to cause the one or more pumps to pump the fluid into manifold." 46

B. GROUNDS 3 AND 4-CARR ANTICIPATES OR RENDERS OBVIOUS ALL CLAIMS 47

1. INDEPENDENT CLAIMS 1, 14, AND 27 48

2. CLAIMS 2, 15, 28 53

3. CLAIMS 3, 16, 29 54

4. CLAIMS 4, 17, 30 54

5. CLAIMS 5, 9, 18, 22, AND 31 55

6. CLAIMS 6, 19, AND 32 56

7. CLAIMS 7, 20 56

8. CLAIMS 8, 21 57

9. CLAIMS 10, 13, 23, 26, 35, 38 58

10. CLAIMS 11, 24, 36 59

11. CLAIMS 12, 25, 37 59

12. CLAIM 33 60

13. CLAIM 34 61

C. GROUND 5-CARR IN VIEW OF BEUTERBAUGH 62

1. INDEPENDENT CLAIMS 1, 14, 27 62

2. CLAIMS 2, 15, 28 67

3. CLAIMS 3, 16, 29 68

D. GROUND 6-CARR IN VIEW OF BEUTERBAUGH AND JACKSON RENDERS CLAIMS 5, 6, 9, 18, 19, 22, 31 AND 32 OBVIOUS 69

E. GROUNDS 7 AND 8-TOLMAN ANTICIPATES/RENDERS OBVIOUS ALL CLAIMS 70

1. INDEPENDENT CLAIMS 1, 14, 27 70

2. CLAIMS 2, 15, 28 79

3. CLAIMS 3, 16, 29 80

4. CLAIMS 4, 17, 30 81

5. CLAIMS 5, 9, 18, 22, 31 81

6. CLAIMS 6, 19, AND 32 82

7. CLAIMS 7, 20 83

8. CLAIMS 8, 21 84

9. CLAIMS 10, 13, 23, 26, 35, 38 84

10. CLAIMS 11, 24, 36 86

11. CLAIMS 12, 25, 37 86

12. CLAIM 33 88

13. CLAIM 34 88

XI. SECONDARY CONSIDERATIONS 89

XII. THE OFFICE HAS NOT PREVIOUSLY CONSIDERED THESE GROUNDS 89

XIII. CONCLUSION 89

TABLE OF AUTHORITIES

Cases

Arthrex, Inc. v. Smith & Nephew, Inc.,
35 F.4th 1328 (Fed. Cir. 2022), *cert. denied*, 143 S. Ct. 2493 (2023) 15

In re Harza,
274 F.2d 669 (CCPA 1960) 53, 68

In re Van Lagenhoven,
458 F.2d 132 (CCPA 1972) 14

Lizardtech, Inc. v. Earth Res. Mapping, Inc.,
424 F.3d 1336 (Fed. Cir. 2005) 13

Perfect Web Techs., Inc. v. InfoUSA, Inc.,
587 F.3d 1324 (Fed. Cir. 2009) 53, 68

Phillips v. AWH Corp.,
415 F.3d 1303 (Fed. Cir. 2005) 12

Purdue Pharma L.P. v. Faulding Inc.,
230 F.3d 1320 (Fed. Cir. 2000) 13

Research Corp. Techs., Inc. v. Microsoft Corp.,
627 F.3d 859 (Fed. Cir. 2010) 14

Toyota Motor Corp. v. Cellport Sys., Inc.,
IPR2015-00633, Paper No. 11 (P.T.A.B. Aug. 14, 2015).....12

Other Authorities

35 U.S.C. § 102 3

35 U.S.C. § 103 3

35 U.S.C. § 102(a)(1).....6, 8

35 U.S.C. § 120 14

37 C.F.R. § 42.100(b) 12

TABLE OF EXHIBITS

Exhibit	Description
Exhibit 1001	U.S. Patent No. 11,560,770 ("770")
Exhibit 1002	Dr. Robert Durham's Declaration
Exhibit 1003	U.S. Patent Publication No. 2022/0268141 ("*Krupa*")
Exhibit 1004	U.S. Patent Publication No. 2019/0233275 ("*Carr*")
Exhibit 1005	International Patent Publication No. WO2020145978 ("*Beuterbaugh*")
Exhibit 1006	U.S. Patent No. 8,490,685 ("*Tolman*")
Exhibit 1007	U.S. Patent Publication No. 2007/0023184 ("*Jackson*")
Exhibit 1008	First Amended Complaint for Patent Infringement, Permanent Injunctive Relief Requested and Demand for Jury Trial, (ECF No. 29); *Downing Wellhead Equipment, LLC v. Intelligent Wellhead Systems, Inc., et al.*, No. 1:23-cv-01180 (D. Colo.) ("the Litigation")
Exhibit 1009	Jacobs, Trent. "The Shale Evolution: Zipper Fracture Takes Hold," J Pet Technol 66 (2014): 60–67. doi: https://doi.org/10.2118/1014-0060-JPT
Exhibit 1010	'770 Prosecution History
Exhibit 1011	Patent Family Priority Diagram
Exhibit 1012	Patent Family Specification Comparisons
Exhibit 1013	'779 Prosecution History
Exhibit 1014	Downing's Objections and Responses to IWS's First Set of Interrogatories in the Litigation
Exhibit 1015	Michael Morton, "Unlocking the Earth: A Short History of Hydraulic Fracturing," GEO ExPro, Vol. 10, No. 6, December

	2013 (https://geoexpro.com/unlocking-the-earth-a-short-history-of-hydraulic-fracturing/) (last accessed November 30, 2023)
Exhibit 1016	B.A. Wells and K.L. Wells. "Shooters – A "Fracking" History." American Oil & Gas Historical Society, (https://aoghs.org/technology/hydraulic-fracturing) (last accessed November 30, 2023)
Exhibit 1017	Carl T. Montgomery and Michael B. Smith, "Hydraulic Fracturing: History of an Enduring Technology," *Journal of Petroleum Technology*, Vol. 62, Issue 12 (Dec. 2010).
Exhibit 1018	Bourgoyne, A. T., Jr., K. K. Millheim, M. E. Chenevert and F. S. Young, Jr. (1986). Applied Drilling Engineering, Society of Petroleum Engineers.
Exhibit 1019	Vassiliou, M. S. (2018), Historical dictionary of the petroleum industry, Rowman & Littlefield
Exhibit 1020	U.S. Patent Application Publication No. 2013/0306322 to Sanborn *et al.* entitled "System and Process for Extracting Oil and Gas by Hydraulic Fracturing" ("*Sanborn*")
Exhibit 1021	U.S. Patent Publication No. 2012/0255734 to Coli *et al.* ("*Coli*") entitled "Mobile, Modular, Electrically Powered System for Use in Fracturing Underground Formations"
Exhibit 1022	Waters, George, Dean, Barry, Downie, Robert, Kerrihard, Ken, Austbo, Lance, and Bruce McPherson. "Simultaneous Hydraulic Fracturing of Adjacent Horizontal Wells in the Woodford Shale." Paper presented at the SPE Hydraulic Fracturing Technology Conference, The Woodlands, Texas, January 2009. doi: https://doi.org/10.2118/119635-MS ("*Waters*")
Exhibit 1023	Pearson, C.M., Bond, A.J., Eck, M.E., and J.H. Schmidt. "Results of Stress-Oriented and Aligned Perforating in Fracturing Deviated Wells." J Pet Technol 44 (1992): 10–18. doi: https://doi.org/10.2118/22836-PA
Exhibit 1024	Mutalik, P N, and Bob Gibson. "Case History of Sequential and Simultaneous Fracturing of the Barnett Shale in Parker County." Paper presented at the SPE Annual Technical Conference and Exhibition, Denver, Colorado, USA, September 2008. doi:

	https://doi.org/10.2118/116124-MS ("*Mutalik*")
Exhibit 1025	Mayerhofer, M. J., Lolon, E. P., Warpinski, N. R., Cipolla, C. L., Walser, D., and C. M. Rightmire. "What is Stimulated Reservoir Volume (SRV)?" Paper presented at the SPE Shale Gas Production Conference, Fort Worth, Texas, USA, November 2008. doi: https://doi.org/10.2118/119890-MS ("*Mayerhofer*")
Exhibit 1026	Roussel, Nicolas P., and Mukul M. Sharma. "Optimizing Fracture Spacing and Sequencing in Horizontal-Well Fracturing." SPE Prod & Oper 26 (2011): 173–184. doi: https://doi.org/10.2118/127986-PA ("*Roussell*")
Exhibit 1027	K. R. Webster, W. C. Goins, Jr., and S. C. Berry, "A Continuous Multistage Tracing Technique," *Journal of Petroleum Technology,* vol. 17, no. 06, pp. 619-625, 1965, doi: 10.2118/977-pa. ("*Webster*")
Exhibit 1028	A. Casero, G. Pace, B. Malone, F. Cantaloube, L. Tealdi, H. Malonga, and R. Seale, "Continuous Pumping, Multistage, Hydraulic Fracturing in Kitina Field, Offshore Congo, West Africa," in *SPE International Symposium and Exhibition on Formation Damage Control*, 2008, vol. All Days, SPE-112442-MS, doi: 10.2118/112442-ms. [Online]. Available: https://doi.org/10.2118/112442-MS ("*Casero*").
Exhibit 1029	S. Rassenfoss, "A Look Into What Fractures Really Look Like," *Journal of Petroleum Technology,* vol. 70, no. 11, pp. 28-36, 2018, doi: 10.2118/1118-0028-jpt. at 6 ("*Rassenfoss*").
Exhibit 1030	R. Oberhofer, "Application of Ball-Drop Technology to Improve Efficiency and Stimulation of Limited Entry Completion Systems," in *Abu Dhabi International Petroleum Exhibition & Conference*, 2016, vol. Day 2 Tue, November 08, 2016, D021S052R004, doi: 10.2118/183427-ms. [Online]. Available: https://doi.org/10.2118/183427-MS ("*Oberhofer*").
Exhibit 1031	Tolman, R. C., et al. (2009). Method and Apparatus for Simultaneous Stimulation of Multi-Well Pads. SPE Hydraulic Fracturing Technology Conference ("*Tolman*").

Exhibit 1032	G. R. Holzhausen and R. P. Gooch, "Impedance of Hydraulic Fractures: Its Measurement and Use for Estimating Fracture Closure Pressure and Dimensions," in *SPE/DOE Low Permeability Gas Reservoirs Symposium*, 1985, vol. All Days, SPE-13892-MS, doi: 10.2118/13892-ms. [Online]. Available: https://doi.org/10.2118/13892-MS ("*Holzhausen*").
Exhibit 1033	R. W. Paige, L. R. Murray, and J. D. M. Roberts, "Field Application of Hydraulic Impedance Testing for Fracture Measurement," *SPE Production & Facilities,* vol. 10, no. 01, pp. 7-12, 1995, doi: 10.2118/26525-pa ("*Paige*").
Exhibit 1034	L. V. Massaras, A. Dragomir, and D. Chiriac, "Enhanced Fracture Entry Friction Analysis of the Rate Step-Down Test," in *SPE Hydraulic Fracturing Technology Conference*, 2007, vol. All Days, SPE-106058-MS, doi: 10.2118/106058-ms. [Online]. Available: https://doi.org/10.2118/106058-MS ("*Massaras*").
Exhibit 1035	S. Mondal, "Pressure transients in wellbores: Water hammer effects and implications for fracture diagnostics," 2010 ("*Mondal*").

TABLE OF CLAIMS

CLAIM / LIMITATION	CLAIM LANGUAGE
CLAIM 1	
1.1	1. A method, comprising: communicating fluid to a first well via a manifold and a first valve, the first valve being associated with both the manifold and the first well; and
1.2	in response to determining that the fluid communicated via the manifold has satisfied one or more conditions:
1.3	opening a second valve; communicating fluid to a second well via the second valve; and
1.4	closing the first valve after opening the second valve.
CLAIM 2	
2.1	2. The method of claim 1, further comprising: communicating fluid to a third well via the manifold and a third valve, the third valve being associated with both the manifold and the third well; and
2.2	in response to determining that the fluid communicated via the manifold has satisfied the one or more conditions:
2.3	opening a fourth valve;
2.4	communicating fluid to a fourth well via the fourth valve; and
2.5	closing the third valve after opening the fourth valve.
CLAIM 3	
3.1	3. The method of claim 2, wherein the first valve is closed after opening both the second valve and the fourth valve; and/or
3.2	the third valve is closed after opening both the second valve and the fourth valve.

CLAIM / LIMITATION	CLAIM LANGUAGE
CLAIM 4	
	4. The method of claim 1, wherein the one or more conditions include one or more flow rate conditions.
CLAIM 5	
	5. The method of claim 4, wherein the fluid communicated via the manifold has satisfied the one or more flow rate conditions when a flow rate of the fluid is below an upper threshold, above a lower threshold, or both.
CLAIM 6	
	6. The method of claim 4, wherein the fluid communicated via the manifold has not satisfied the one or more flow rate conditions when a flow rate of the fluid is above an upper threshold or below a lower threshold.
CLAIM 7	
	7. The method of claim 1, further comprising: pumping the fluid into the manifold.
CLAIM 8	
	8. The method of claim 1, further comprising: determining that the fluid communicated via the manifold has satisfied the one or more conditions.
CLAIM 9	
	9. The method of claim 8, wherein determining that the fluid communicated via the manifold has satisfied the one or more flow rate conditions comprises determining that a flow rate of the fluid is below an upper threshold, above a lower threshold, or both.
CLAIM 10	

CLAIM / LIMITATION	CLAIM LANGUAGE
	10. The method of claim 1, wherein the fluid communicated via the manifold is hydraulic fracturing fluid.
CLAIM 11	
	11. The method of claim 1, wherein: the first valve is a first zipper valve; and/or the second valve is a second zipper valve.
CLAIM 12	
12.1	12. The method of claim 1, wherein the second valve is associated with both the manifold and the second well; and
12.2	wherein communicating fluid to the second well via the second valve comprises communicating fluid to the second well via the manifold and the second valve.
CLAIM 13	
	13. The method of claim 12, wherein the fluid communicated via the manifold is hydraulic fracturing fluid.
CLAIM 14	
14.1	14. An apparatus, comprising: a non-transitory computer readable medium; and a plurality of instructions stored on the non-transitory computer readable medium and executable by one or more processors, wherein, when the instructions are executed by the one or more processors, the following steps are executed:
14.2	communicating fluid to a first well via a manifold and a first valve, the first valve being associated with both the manifold and the first well; and
14.3	in response to determining that the fluid communicated via the manifold has satisfied one or more conditions:
14.4	opening a second valve;

CLAIM / LIMITATION	CLAIM LANGUAGE
	communicating fluid to a second well via the second valve; and
14.5	closing the first valve after opening the second valve.
CLAIM 15	
15.1	15. The apparatus of claim 14, wherein, when the instructions are executed by the one or more processors, the following steps are also executed: communicating fluid to a third well via the manifold and a third valve, the third valve being associated with both the manifold and the third well; and
15.2	in response to determining that the fluid communicated via the manifold has satisfied the one or more conditions:
15.3	opening a fourth valve;
15.4	communicating fluid to a fourth well via the fourth valve; and
15.5	closing the third valve after opening the fourth valve.
CLAIM 16	
16.1	16. The apparatus of claim 15, wherein: the first valve is closed after opening both the second valve and the fourth valve; and/or
16.2	the third valve is closed after opening both the second valve and the fourth valve.
CLAIM 17	
	17. The apparatus of claim 14, wherein the one or more conditions include one or more flow rate conditions.
CLAIM 18	
	18. The apparatus of claim 17, wherein the fluid communicated via the manifold has satisfied the one or more

CLAIM / LIMITATION	CLAIM LANGUAGE
	flow rate conditions when a flow rate of the fluid is below an upper threshold, above a lower threshold, or both.
CLAIM 19	
	19. The apparatus of claim 17, wherein the fluid communicated via the manifold has not satisfied the one or more flow rate conditions when a flow rate of the fluid is above an upper threshold or below a lower threshold.
CLAIM 20	
	20. The apparatus of claim 14, wherein, when the instructions are executed by the one or more processors, the following step is also executed: pumping the fluid into the manifold.
CLAIM 21	
	21. The apparatus of claim 14, wherein, when the instructions are executed by the one or more processors, the following step is also executed: determining that the fluid communicated via the manifold has satisfied the one or more conditions.
CLAIM 22	
	22. The apparatus of claim 21, wherein determining that the fluid communicated via the manifold has satisfied the one or more flow rate conditions comprises determining that a flow rate of the fluid is below an upper threshold, above a lower threshold, or both.
CLAIM 23	
	23. The apparatus of claim 14, wherein the fluid communicated via the manifold is hydraulic fracturing fluid.
CLAIM 24	
	24. The apparatus of claim 14, wherein:

CLAIM / LIMITATION	CLAIM LANGUAGE
	the first valve is a first zipper valve; and/or the second valve is a second zipper valve.
CLAIM 25	
25.1	25. The apparatus of claim 14, wherein the second valve is associated with both the manifold and the second well; and
25.2	wherein communicating fluid to the second well via the second valve comprises communicating fluid to the second well via the manifold and the second valve.
CLAIM 26	
	26. The apparatus of claim 25, wherein the fluid communicated via the manifold is hydraulic fracturing fluid.
CLAIM 27	
27.1	27. A system, comprising: a first valve via which fluid is communicated from a manifold to a first well;
27.2	a second valve via which fluid is adapted to be communicated to a second well; and
27.3	one or more controllers, configured to:
27.4	open the second valve to thereby communicate fluid to the second well via the second valve; and
27.5	close the first valve after opening the second valve,
27.6	in response to: determining that the fluid communicated via the manifold has satisfied one or more conditions.
CLAIM 28	
28.1	28. The system of claim 27, further comprising: a third valve via which fluid is communicated from the manifold to a third well;
28.2	a fourth valve via which the fluid is adapted to be communicated to a fourth well; and

CLAIM / LIMITATION	CLAIM LANGUAGE
28.3	the one or more controllers, configured to: open the fourth valve to thereby communicate fluid to the fourth well via the fourth valve; and
28.4	close the third valve after opening the fourth valve,
28.5	in response to: determining that the fluid communicated via the manifold has satisfied the one or more conditions.
CLAIM 29	
29.1	29. The system of claim 28, wherein the one or more controllers are further configured to: close the first valve after opening both the second valve and the fourth valve; and/or
29.2	close the third valve after opening both the second valve and the fourth valve.
CLAIM 30	
	30. The system of claim 27, wherein the one or more conditions include one or more flow rate conditions.
CLAIM 31	
	31. The system of claim 30, wherein the fluid communicated via the manifold has satisfied the one or more flow rate conditions when a flow rate of the fluid is below an upper threshold, above a lower threshold, or both.
CLAIM 32	
	32. The system of claim 30, wherein the fluid communicated via the manifold has not satisfied the one or more flow rate conditions when a flow rate of the fluid is above an upper threshold or below a lower threshold.
CLAIM 33	
	33. The system of claim 27, further comprising the manifold.

CLAIM / LIMITATION	CLAIM LANGUAGE
CLAIM 34	
	34. The system of claim 27, further comprising one or more pumps;
	wherein the one or more controllers are further configured to cause the one or more pumps to pump the fluid into the manifold.
CLAIM 35	
	35. The system of claim 27, wherein the fluid communicated via the manifold is hydraulic fracturing fluid.
CLAIM 36	
	36. The system of claim 27, wherein: the first valve is a first zipper valve; and/or the second valve is a second zipper valve.
CLAIM 37	
37.1	37. The system of claim 27, wherein the second valve is associated with both the manifold and the second well; and
37.2	wherein communicating fluid to the second well via the second valve comprises communicating fluid to the second well via the manifold and the second valve.
CLAIM 38	
	38. The system of claim 37, wherein the fluid communicated via the manifold is hydraulic fracturing fluid.

I. INTRODUCTION

Petitioner Intelligent Wellhead Systems, Inc. ("IWS"/"Petitioner") requests *inter partes* review (IPR) of claims 1-38 ("Claims") of U.S. Patent No. 11,560,770 ("'770 Patent"/"'770") (Ex. 1001), assigned to Downing Wellhead Equipment, LLC ("Downing"/"Patent Owner"). The Claims are unpatentable and should be cancelled.

The Claims merely recite steps operators have long performed to communicate fluid to wells: determining a condition of fluid communicated to a well and opening/closing valves in response. Either a generic computer or controller performs the steps, or, alternatively, no computer is required at all. Thus, the Claims merely cover the well-known abstract idea of determining fluid conditions to decide when to open/close valves in multi-well operations. This Petition shows how certain prior art anticipates and/or renders the Claims obvious.

II. MANDATORY NOTICES

A. REAL PARTIES-IN-INTEREST

Intelligent Wellhead Systems, Corp. and IWS USA Corp. are real parties-in-interest.

B. RELATED MATTERS

Downing asserted the Claims against IWS, Intelligent Wellhead Systems, Corp. and IWS USA Corp., in *Downing Wellhead Equipment, LLC v. Intelligent Wellhead Systems, Inc.*, *et al.*, No. 1:23-cv-01180-RMR-SP (D. Colo.) ("the

Litigation"). Ex. 1008. The Litigation is in its early stages. IWS has not yet filed an answer because IWS's Motion to Dismiss under 35 U.S.C. § 101 (ECF No. 34) is pending. A claim construction hearing has not been set; related briefing does not occur until April/May 2024. Expert discovery does not close until March 28, 2025, and dispositive motions are not due until April 30, 2025. A trial date has not yet been set.

C. LEAD AND BACKUP COUNSEL

Lead Counsel:	Backup Counsel:
Tammy J. Terry (Reg. No. 69,167) OSHA BERGMAN WATANABE & BURTON LLP 1100 Louisiana Street, Suite 4900 Houston, TX 77002 Telephone: 713.228.8600 Email: terry@obwb.com	Lisa E. Margonis (Reg. No. 57,123) Califf T. Cooper (*Pro Hac Vice* to be requested) Laura J. Witbeck (Reg. No. 59,766) Peter C. Schechter (Reg. No. 31,662) OSHA BERGMAN WATANABE & BURTON LLP 1100 Louisiana Street, Houston, TX 77002 Tel. | Fax: 713.228.8600 | 713.228.8778 Emails: margonis@obwb.com; cooper@obwb.com; witbeck@obwb.com; schechter@obwb.com; and, OBWB-IWS-Downing@obwb.com

D. SERVICE INFORMATION

Papers concerning this matter should be served on Lead and Back-up counsel. Petitioner consents to service by email at OBWB-IWS-Downing@obwb.com.

III. PAYMENT OF FEES

Charge all IPR-associated fees to Deposit Account 50-0591.

IV. GROUNDS FOR STANDING

Petitioner certifies that '770 is available for IPR and Petitioner is not barred/estopped from requesting IPR on the identified grounds.

V. INDENTIFICATION OF CHALLENGE

The Claims should be cancelled as unpatentable under post-AIA[1] 35 U.S.C. §§ 102/103 on these grounds:

GROUND(S)	CHALLENGED CLAIMS (1-38)	35 U.S.C. §	REFERENCE(S)
1	All	102	*Krupa*
2	All	103	*Krupa*
3	All	102	*Carr*
4	All	103	*Carr*
5	All	103	*Carr* and *Beuterbaugh*
6	5, 6, 9, 18, 19, 22, 31, 32	103	*Carr, Beuterbaugh,* and *Jackson*
7	All	102	*Tolman*
8	All	103	*Tolman*

[1] The earliest effective filing date of '770 is after 2013.

Grounds are explained below, including where prior art discloses/teaches/suggests each limitation.

VI. TECHNOLOGY BACKGROUND AND PRIOR ART

Since oil and gas operations began, operators have been opening and closing valves on wells in response to conditions. Ex. 1002, ¶¶ 60-98; *see also*, Exs. 1009, 1015-1035. Monitoring and determining conditions and responsively sequencing valves, as the '770 Patent purportedly claims, was therefore well known long before the '770 Patent, and is disclosed/taught/suggested in at least the following prior art.

A. *KRUPA*

U.S. Patent Pub. No. 2022/0268141 ("*Krupa*," Ex. 1003) was filed on February 18, 2022, published on August 25, 2022, and claims priority to U.S. Provisional App. No. 63/153,607, filed February 25, 2021. Because *Krupa*'s effective filing date is February 25, 2021—before '770's priority date (May 17, 2021)—*Krupa* is 35 U.S.C. § 102(a)(2)-prior art.

Krupa discloses continuous pumping ("CP") systems and methods on multiple wells using a software application that includes instructions for a sequence of valve operations to direct fluid flow into selected wells. *Krupa*, Abstract, ¶ [0038]. Figures 2A-E show an exemplary valve sequence/flow path through wellhead assemblies 201 (wells):

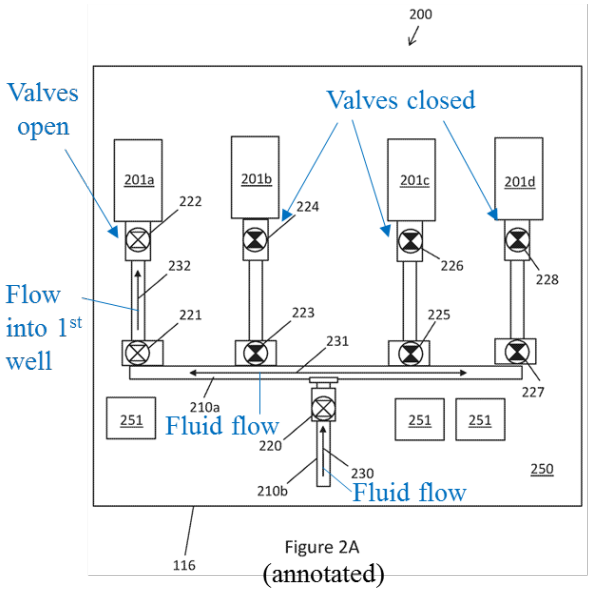

Figure 2A
(annotated)

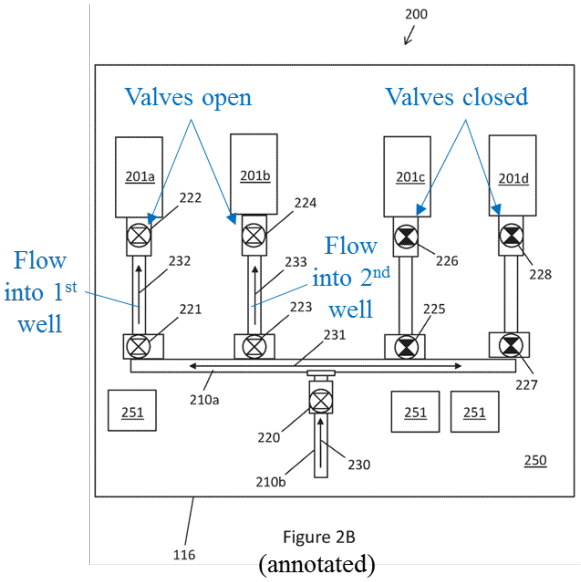

Figure 2B
(annotated)

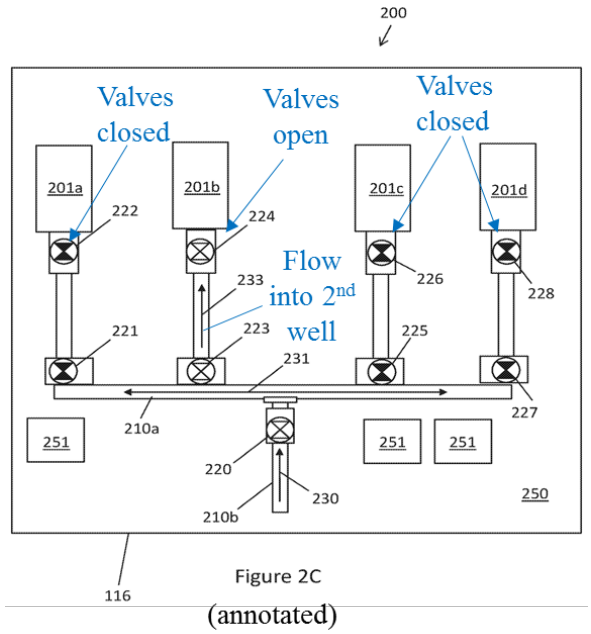

Figure 2C
(annotated)

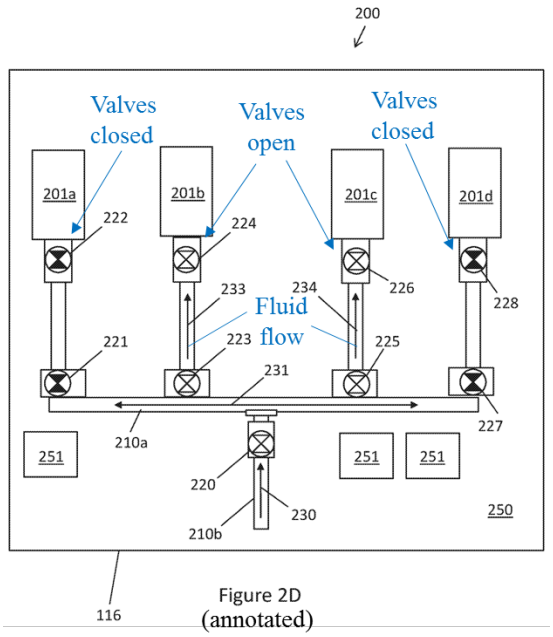

Figure 2D
(annotated)

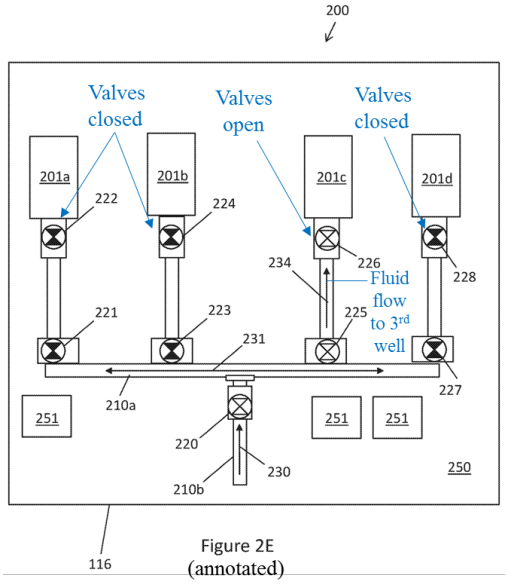

Figure 2E (annotated)

B. *CARR*

U.S. Patent Pub. No. 2019/0233275 ("*Carr*," Ex. 1004), filed January 31, 2018, published on August 1, 2019, before '770's priority date (May 17, 2021). *Carr* is § 102(a)(1)-prior art.

Carr is directed to methods and systems for controlling and "monitoring fluid flow from a centralized location to multiple wells." *Carr*, [0015]. The fluid may be fracturing fluid. *Carr*, [0019]. Fluid is pumped from a centralized location (105) to multiple wells (first well 140, second well 142) through associated valves (first valve 470, second valve 472), a manifold 120, and piping/tubing:

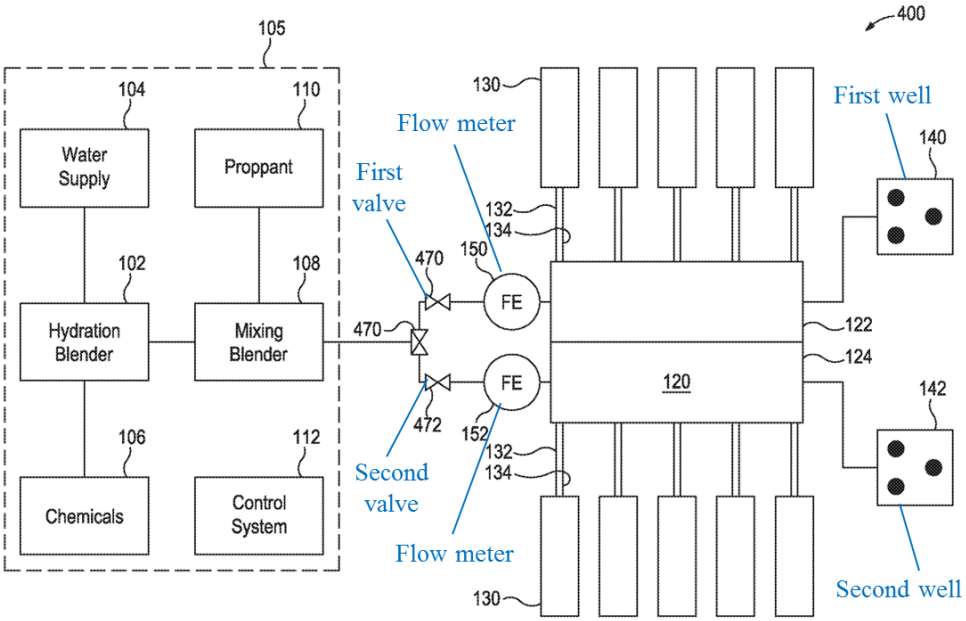

FIG. 5
(annotated)

Carr, [0016]-[0017]. The valves can be "disposed within" manifold 120, which itself "can allow multiple wells to be fractured or treated simultaneously." *Carr*, [0021], [0033].

C. *BEUTERBAUGH*

WO2020145978 ("*Beuterbaugh*," Ex. 1005), filed January 10, 2019, published on July 16, 2020, before the '770's priority date. *Beuterbaugh* is § 102(a)(1)-prior art.

Beuterbaugh discloses fracking multiple wells by alternatingly opening and closing valves to the wells using switching and plug valves to divert high pressure "fracturing fluid near instantaneously from one well to the other well." *Beuterbaugh*, Abstract, [0018], [0022], [0027].

D. *JACKSON*

U.S. Publication No. 2007/0023184 ("*Jackson*," Ex. 1007), filed May 30, 2006, published on February 1, 2007—years before '770's priority date. *Jackson* is § 102(a)(1)-prior art.

Jackson discloses fracturing processes using gas (fluid) injections at different flowrates within set thresholds for set durations. *Jackson*, Abstract, ¶¶ [0012], [0017], [0045]-[0046], [0053], [0056]-[0059].

E. *TOLMAN*

U.S. Patent 8,490,685 ("*Tolman*," Ex. 1006) issued July 23, 2013—years before '770's priority date. *Tolman* is § 102(a)(1)-prior art.

Tolman discloses a system "enabling simultaneous or concurrent operations in the stimulation of multiple wells," where a "manifold is configured to provide a flow path from the stimulation fluid pumping system into at least one selected well…and to isolate at least one non-selected well…from the stimulation fluid pumping system." *Tolman*, 3:60-62.[2]

VII. PERSON OF ORDINARY SKILL IN THE ART

A POSITA as of '770's priority date would have had an engineering degree and two or more years' well-related operations experience, or equivalent education/experience.

[2] Citations to Tolman/Ex. 1006 are [column]:[line] format.

VIII. OVERVIEW OF THE '770 PATENT

A. SUMMARY

The '770's claims broadly purport to cover opening and closing valves on wells in response to "one or more conditions." Ex. 1001[3], 22:34-25:23. The valves can be on any two wells that may be anywhere relative to each other (including different sites), and the "one or more conditions" can be any condition of a fluid communicated via a manifold to a first well, at least according to the claims. *Id.* Meanwhile, the only "condition" '770's specification describes is flowrate (also referred to as frac or idle rate), including merely determining if there is/isn't fluid flow. *Id.*, 13:36-54; 18:25-29, 60-62; 19:12-14, 50-51; 20:11-21; 21:9-18; Fig. 12.

B. '770 PROSECUTION SUMMARY

'770 issued January 24, 2023, from Application No. 17/878,493 ("'493 Application"), filed August 1, 2022, as a continuation application of Application No. 17/388,716 ("'716 Application," issued as the '779 Patent). Only one office action issued during prosecution.

The '770 claims issued without amendment, *i.e.*, in their original form as filed in the '493 Application. These claims recited many of the same limitations as its parent '716 Application's claims, except the '716 Application included "allowable" "flowrate" limitations, as shown below (differences between claims underlined):

'770's/'493 Application's Claim 1:	**'779's/'716 Application's Claim 1:**
1. A method, comprising: communicating fluid to a first well via a manifold and a first valve, the first valve being associated with both the manifold and the first well; and	1. A method, comprising: (a) permitting performance of a first hydraulic fracturing operation on a first well, which first hydraulic fracturing operation comprises pumping fluid into the first well via a first valve associated with the first well, and
	measuring a flow rate of the fluid being pumped into the first well;
in response to determining that the fluid communicated via the manifold has satisfied one or more conditions:	(b) determining that the flow rate of the fluid being pumped into the first well is below a flow rate threshold and has been below the flow rate threshold for a threshold amount of time;
opening a second valve;	(c) during pumping of the fluid into the first well via the first valve, opening a second valve associated with a second well;
communicating fluid to a second well via the second valve; and	(d) permitting performance of a second hydraulic fracturing operation on the second well, which second hydraulic fracturing operation comprises pumping fluid into the second well via the second valve; and
closing the first valve after opening the second valve.	(e) during pumping of the fluid into the second well via the second valve, closing the first valve associated with the first well;
	wherein, during each of steps (a), (b), (c), (d),

	and (e), fluid is continuously pumped to the first valve, the second valve, or both the first valve and the second valve.

During ’779’s prosecution, the Examiner allowed claims over US20170275980A1 (“*Kajaria*”) only once they recited measuring flowrate and meeting/satisfying flowrate thresholds/conditions. Ex. 1013, p. 47, 53, 111-115. Meanwhile, a different Examiner allowed ’770’s claims (which did not recite such elements) over *Kajaria* without requiring such flowrate-based limitations. Thus, although the ’779-Examiner found that *Kajaria* disclosed ’779’s broader claim limitations, the ’770-Examiner did not (allowing the same much broader limitations over *Kajaria*).

Contrary to the ’779-Examiner’s conclusions about *Kajaria*, the ’770-Examiner concluded that *Kajaria* fails to disclose “the key features of ‘in response to determining that the fluid communicated via the manifold has satisfied one or more conditions: opening a second valve.’” Ex. 1010, p. 19.

’770’s sole office action rejected the claims as unpatentable over ’779’s claims, finding the claims “not patentably distinct from each other because the claims of the present application merely remove limitations and/or have minor obvious changes in claim language….” *Id*., p. 61-62. ’770 issued after Downing filed a terminal disclaimer.

C. CLAIM CONSTRUCTION

The Board only construes claims when necessary to resolve the underlying controversy. *Toyota Motor Corp. v. Cellport Sys., Inc.*, IPR2015-00633, Paper No. 11 at 16 (P.T.A.B. Aug. 14, 2015). Claim construction is not necessary in this IPR.[4] If necessary, however, the *Phillips* standard applies (37 C.F.R. § 42.100(b)), *i.e.*, claim terms are typically given their ordinary and customary meanings, as understood by a POSITA at the time of the invention, having considered the claims, specification, and prosecution history. *Phillips v. AWH Corp.*, 415 F.3d 1303, 1312-16 (Fed. Cir. 2005).

IX. THE CHALLENGED CLAIMS' PRIORITY DATE IS MAY 17, 2021

When recently asked in the Litigation to state '770's priority date, Downing refused, surprisingly stating it would first need to see IWS's invalidity contentions. Ex. 1014, 5-7. Petitioner therefore addresses priority here.

'770 is a continuation of '779, which claims priority to Provisional Application No. 63/189,663 ("'663 Provisional"), filed May 17, 2021. '770 also claims priority to seven non-provisional and nine other provisional applications, collectively referred to as "the CIP Family," as each application is related to '770 through at least one CIP relationship (*see* Exhibit 1011).

[4] Claim construction may be necessary in the Litigation for invalidity, noninfringement, and/or unenforceability purposes.

Significantly, '770's specification is identical to '779's specification but completely different from every prior application in the CIP family, except for a few "boilerplate" passages and generic descriptions of computing components. *See* Ex. 1012 (merge-comparisons between '770/'779 and related specifications). Thus, '770's claims must be analyzed against the '663 Provisional and the CIP Family to determine whether '770 is entitled to any earlier filing dates. As discussed below, May 17, 2021 is the earliest priority date to which any of '770's claims are entitled.[5]

For a later-filed claim to be entitled to an earlier-filed application's filing date, the earlier-filed application must comply with § 112's written description requirement with respect to the later-filed claim. 35 U.S.C. § 120; *Lockwood v. Am. Airlines, Inc.*, 107 F.3d 1565, 1571-72 (Fed. Cir. 1997). Specifically, the specification "must describe the invention sufficiently to convey to a [POSITA] that the patentee had possession of the claimed invention at the time of the application, *i.e.*, that the patentee invented what is claimed." *Lizardtech, Inc. v. Earth Res. Mapping, Inc.*, 424 F.3d 1336, 1345 (Fed. Cir. 2005). Put another way, "one skilled in the art, reading the original disclosure, **must immediately discern the limitation at issue** in the [later-filed] claims." *Purdue Pharma L.P. v. Faulding Inc.*, 230 F.3d 1320, 1323 (Fed. Cir. 2000) (emphasis added).

[5] If '770 is afforded an earlier priority date, *Carr*, *Beuterbaugh*, *Tolman*, and *Jackson* are still § 102(a)(1) prior art.

"Entitlement to a[n] [earlier] filing date extends only to the subject matter that is disclosed; not to that which is obvious…[t]herefore the parent application must actually or inherently disclose the elements of the later-filed claims." *Research Corp. Techs., Inc. v. Microsoft Corp*., 627 F.3d 859, 870 (Fed. Cir. 2010).

The CIP Family lacks written description support for the claimed valve sequence of opening/closing a first and second valve associated with a first and second well "in response to…one or more conditions," as recited in each of '770's independent claims.

Further, the only written description support for the claimed "one or more conditions" of fluid communicated via the manifold is found in the specifications of '770, '779, and the '663 Provisional, each of which only refer to using "frac rate," "idle rate," or "flow rate."

Priority is granted on a claim-by-claim, not a limitation-by-limitation, basis. Thus, a later-filed claim that includes *any* new matter (not properly supported by an earlier-filed § 112-compliant application) is not entitled to the earlier-filed application's filing date. *In re Van Lagenhoven,* 458 F.2d 132, 136-137 (CCPA 1972). Because '770's independent claims have limitations containing new matter introduced into the chain of applications via the '663 Provisional, those claims, as a whole, and dependent claims can only benefit from the '663 Provisional's filing date and no other earlier-filed application.

Also, in a chain of CIPs, "each application in the chain leading back to the earlier application must comply with [§ 112's] written description requirement … to gain the benefit of the filing date of an earlier application under 35 U.S.C. § 120." *Lockwood*, 107 F.3d at 1571. "That means each application in the chain must 'reasonably convey[ ] to those skilled in the art that the inventor had possession of the [later-claimed] subject matter as of the filing date.'" *Arthrex, Inc. v. Smith & Nephew, Inc.,* 35 F.4th 1328, 1343 (Fed. Cir. 2022), *cert. denied*, 143 S. Ct. 2493 (2023). Here, many applications of the CIP Family do *not* comply with the written description requirement as to '770's Claims, instead disclosing subject matter entirely different from '770's fluid conditional valve swaps, such as:

1) Remotely operating valves to control well systems (Apps. 17/319,854, 16/855,749, and Prov. App. 62/836,761, entitled "Intelligently controlled fluid systems");
2) Greasing valves (App. 16/248,648, "Delivering and metering grease to process valves," and Prov. App. 62/617,443, "Grease system for valves used in oil and gas operations");
3) Launching objects into well via frac stack (App. 16/803,156, "Launching objects into a wellbore," App. 16/248,633, "Object launching apparatus and related methods," Prov. App. 62/617,438, "Object launching apparatus," App. 16/100,741, "Subterranean formation fracking and well

workover," Prov. App. 62/638,688, "Unibody valve and methods of using the valve," Prov. App. 62/638,681, "Method of operating a valve and extending an object through the valve and into a well," Prov. App. 62/637,220, "Unibody valve and methods of using the valve," Prov. App. 62/637,215, "Method of operating a valve and extending an object through the valve and into a well," and Prov. App. 62/598,914, "Valve apparatus"); and,

4) Well stack connectors (App. 16/436,623 and Prov. App. 62/755,170, "Subterranean formation fracking and well stack connector").

Because '770's Claims do not have § 112-compliant support in the CIP Family, they do not benefit from those earlier applications' filing dates.

Therefore, '770's Claims' earliest priority date is May 17, 2021 ('663 Provisional's filing date).

X. DETAILED EXPLANATION OF THE GROUNDS

Post-AIA rules apply in this Petition because the '770 Patent and its entire application family were filed after 2013.

The '770 Claims are grouped by method (Claims 1-13), apparatus (Claims 14-26), and system claims (Claims 27-38). Independent Claim 1 and its dependent claims are methods that a person/computer may execute. Independent Claim 14 and its dependent claims recite an apparatus with standard computer language that

executes Claim 1's and its progeny's steps. Claim 27 and its dependent claims recite a system that recites "one or more controllers" "configured to" perform Claim 1's method with Claim 1's wording slightly re-arranged. Because of the similarities across groupings (though grammatically different, functionally the same), claims are discussed together accordingly.

Further, as discussed in Section VIII.A, '770's independent claims are broader than '770's description. Although the independent claims do not require hydraulic fracturing, continuous pumping, or even that the second well/valve is associated with the same manifold as the first well/valve, prior art discussed herein nevertheless include such applications.

The Claims are considered as a whole but broken down into discrete subparts for ease of discussion. Dependent claim discussions incorporate their respective independent and intervening claim discussions.

A. GROUNDS 1 AND 2-KRUPA ANTICIPATES OR RENDERS OBVIOUS ALL CLAIMS

The Claims of the '770 Patent relate to a method, apparatus, and system with overlapping valve sequences and communicating fluid to two or more wells onsite. This is exactly what *Krupa* discloses. For example, *Krupa's* Figure 1 shows a system for hydraulically fracturing multiple wells:

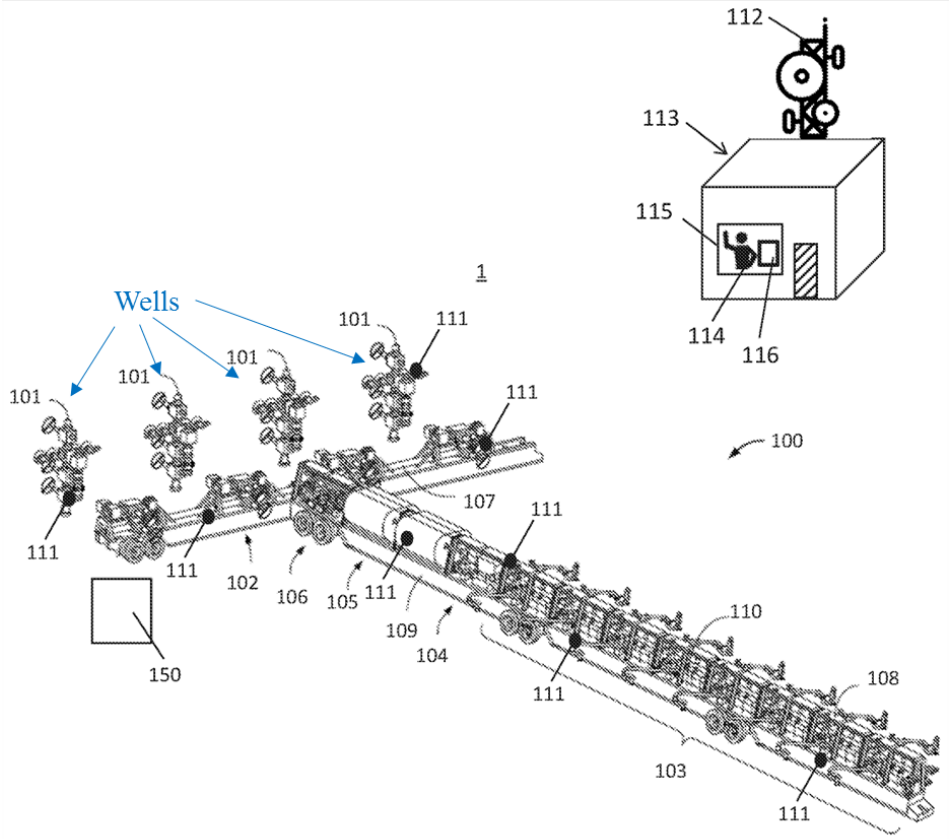

Figure 1
(annotated)

As shown in Figures 2A-C, *Krupa* discloses valves (221-224) associated with each well (201a-d) operated in overlapping valve sequences to communicate fluid to different wells:

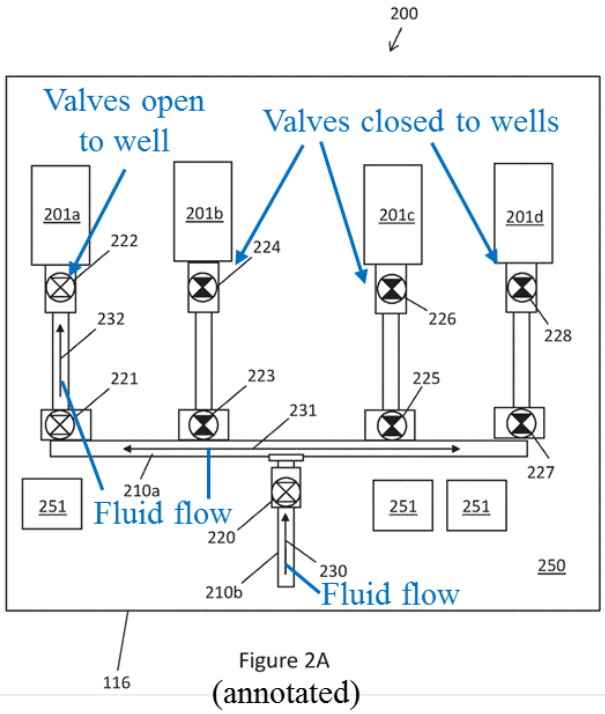

Figure 2A
(annotated)

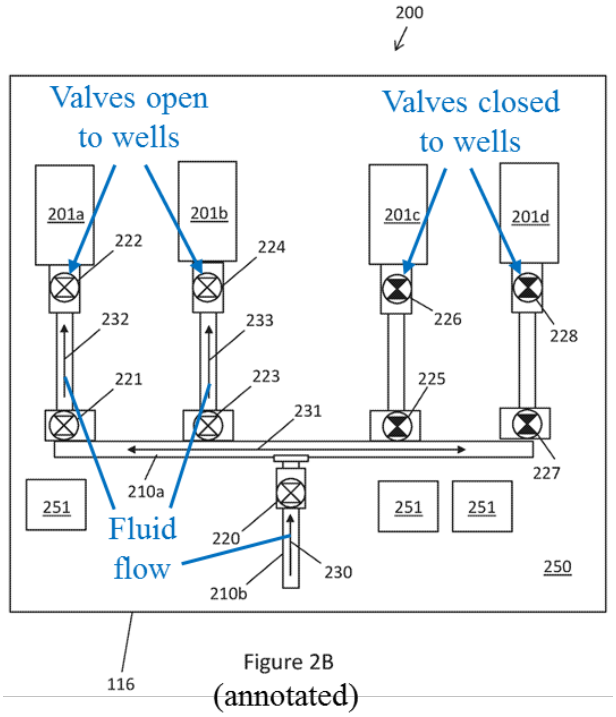

Figure 2B
(annotated)

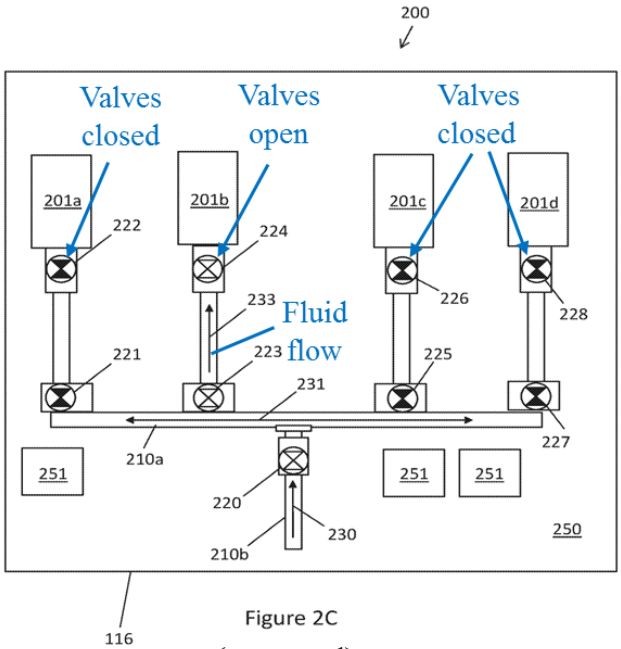

Figure 2C
(annotated)

Krupa also considers various operational conditions, including flowrate, for determining when to switch flow to the wells, as claimed in ’770.

As discussed below, *Krupa* anticipates and/or renders obvious all Claims.

1. INDEPENDENT CLAIMS 1, 14, 27

Krupa discloses all these Claims' limitations:

Claim	Krupa[6]
[14.1]-"An apparatus, comprising: a non-transitory computer readable medium; and a plurality of instructions stored on the non-transitory computer readable medium and executable by one or more processors, wherein, when the instructions are executed by the one or more processors, the following steps are executed:"	"Software instructions in the form of computer readable program code to perform embodiments of the disclosure may be stored, in whole or in part, temporarily or permanently, on a non-transitory computer readable medium such as a … storage device, … flash memory, physical memory, or any other computer readable storage medium." [0032]. "[S]oftware instructions may correspond to computer readable program code, that when executed by a processor(s), may perform one or any" of *Krupa*'s "automated hydraulic fracturing systems features …including that associated with data interpretation and automated hydraulic fracturing pumping systems." [0032].
[1.1]/[14.2]-"A method, comprising: communicating fluid to a first well via a manifold and a first valve, the first valve being	Figure 1 shows a hydraulic fracturing system having four wells (101), including a first well, coupled to a zipper manifold (102) via flow lines (not shown):

[6] All bracketed 4-digit numbers in *Krupa* claim charts refer to *Krupa's* numbered paragraphs.

Claim	Krupa[6]
associated with both the manifold and the first well; and” **[27.1]**-“A system, comprising: a first valve via which fluid is communicated from a manifold to a first well;”	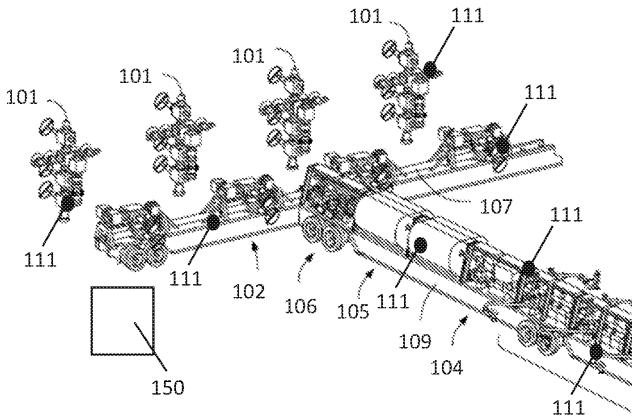 Figure 1 [0019]. Figure 2A shows first-fourth wells (201a-d), where valves positioned between each well and the manifold connection (210a) (*e.g.*, manifold connection to a zipper manifold 102 in Figure 1) are adapted to control the flow of fluid to each well. [0020], [0023]. 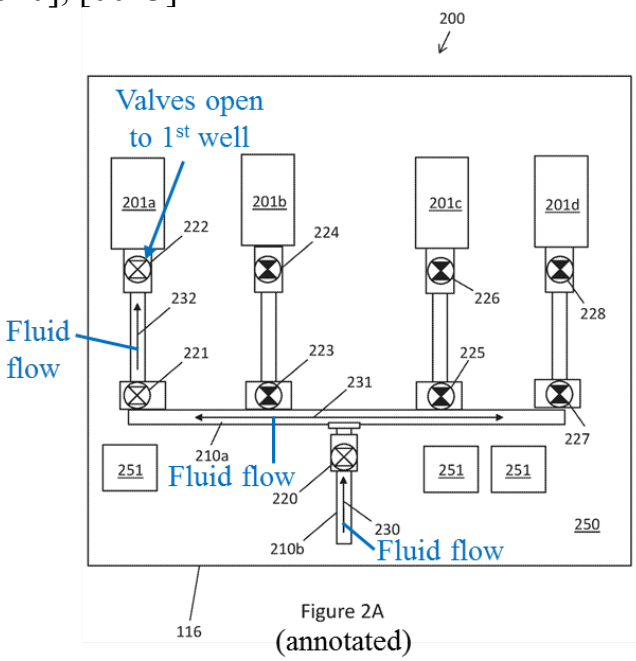 Figure 2A (annotated)

Claim	Krupa[6]
	Fluid is pumped (fluid flow 231, 232) to a first well (201a) via a manifold (e.g., zipper manifold 102 or manifold connection 210a) and first valves (221/222) by opening the first valves. [0005], [0019], [0038], [0040].
[27.2]-"a second valve via which fluid is adapted to be communicated to a second well; and"	In Figure 2B, fluid is pumped into a second well 201b when second valves 223/224 are open: 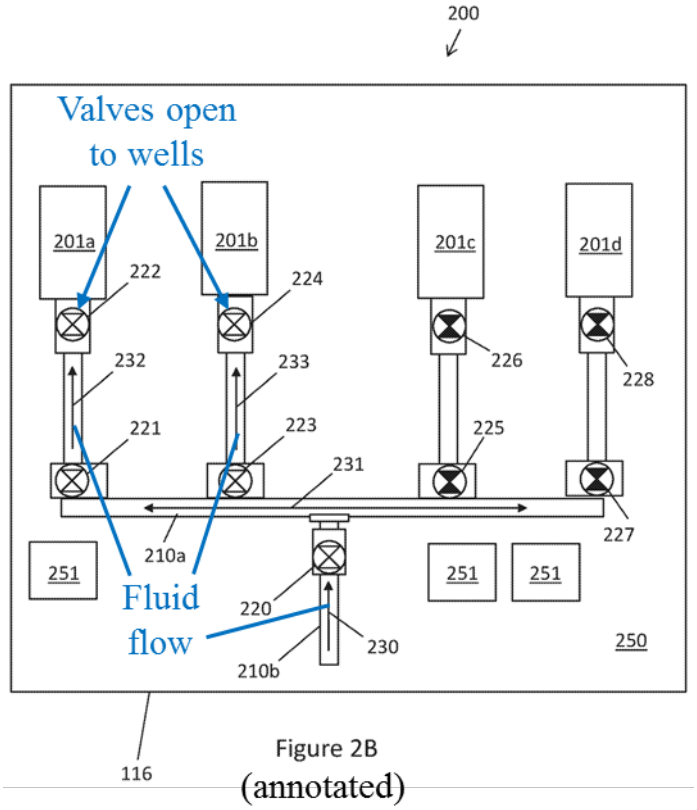 Figure 2B (annotated) [0005], [0043].
[27.3]-"one or more controllers, configured to:"	*Krupa* discloses fracturing pumping plan instructions including "a sequence of valve operations to direct fluid flow through a selected path in one or more…wellhead assemblies and manifolds on the frac pad, with the sequence of valve operations being automatically controlled by the software through a valve control system associated with the valves." [0036]. The valve positions "may be fed into a controller" for operating the system's valves. [0021], [0053].

Claim	Krupa[6]
	Krupa also discloses "a primary controller of the hydraulic fracturing pumping system." [0022]. In *Krupa*, a human machine interface (HMI) of the computer system executing instructions of a fracturing plan may be a "control panel" and/or other hardware component that allows "the operator 114 to interact through the HMI 116 with the built hydraulic fracturing pumping system." [0027]. For example, the HMI allows an operator "to monitor, change, or shut down fracturing operations," *e.g.*, "send permission requests to the operator 114 to perform various instructions from the fracturing pumping plan." [0027].
[1.2]/[14.3]-"in response to determining that the fluid communicated via the manifold has satisfied one or more conditions:" **[27.6]**-"in response to: determining that the fluid communicated via the manifold has satisfied one or more conditions."	Fracturing operations include "many gauges and meters for flow rate, fluid density, treating pressure, etc." [0014]. "[S]ensors work[] in conjunction with built hydraulic fracturing system [for] automating fracturing operations for [CP] in one or more wells." [0016]. Further, sensors may aid in carrying out a fracturing plan, *e.g.*, by using collected data "to create real-time logging of operational metrics, such as duration between various stages and determining field efficiency." [0026]. Krupa's sensors provide information about the state of the fracturing operation and help provide choices for possible stages. [0026]. In one example, a next stage in a fracturing operation is triggered when determined flowrate conditions are met: "When a frac stage of the first wellhead assembly…is at an end, a flush fluid may be pumped to flow…at a full pump rate, such as a rate of about 50-150 bbl/min, into the first wellhead assembly…. Once a total volume of the flush fluid is pumped, a pump rate may be reduced from the full pump rate… to 5-15 bbl/min. Once a pressure has stabilized at the reduced pump rate, the software application may move the fracturing pumping plan to the next step." [0042].
[1.3]/[14.4]-"opening a second valve;	Methods "include pumping the fluids into a second well via the… manifold while continuously pumping the fluids into the first well by opening a second set of valves." [0005].

Claim	Krupa[6]
communicating fluid to a second well via the second valve; and" **[27.4]-**"open the second valve to thereby communicate fluid to the second well via the second valve; and"	In an example, the second valves are opened after determining a frac stage of the first well is at an end, *e.g.*, when the flow rate is reduced to 5-15 bbl/min and the pressure has stabilized at the reduced pump rate. [0042]-[0043]. This set of valve operations is shown in Figure 2B, where second "valves 223, 224 may be opened while the first…valves 221, 222 remain open during" pumping to allow fluid flow 233 into the second well 201b ([0043]): 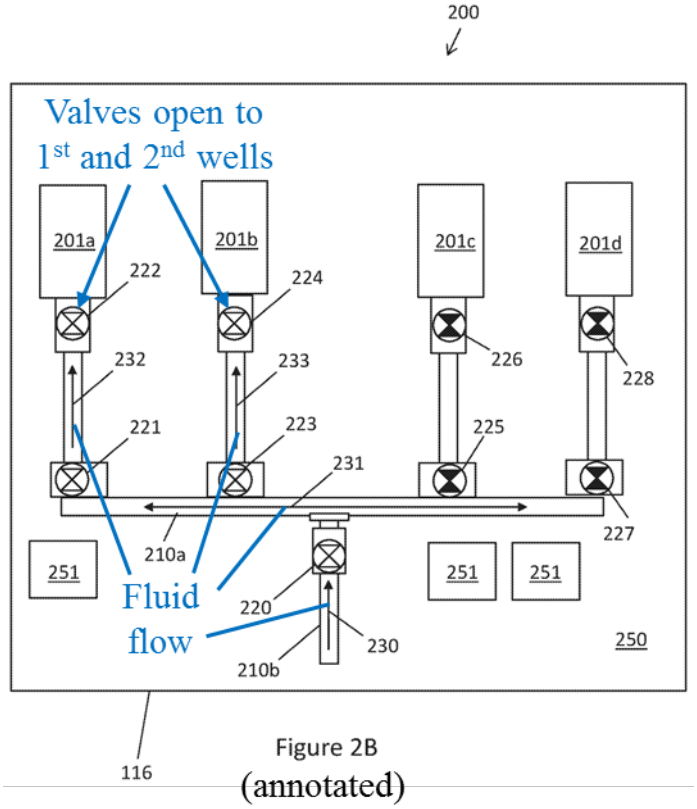 Figure 2B (annotated) The Claims do not specify the "fluid." Nevertheless, *Krupa* uses fluids for hydraulic fracturing operations, including fracturing fluid with proppant and flush fluid. [0018].
[1.4]/[14.5]- "closing the first valve after opening	*Krupa's* methods include opening second valves to pump fluid into a second well while fluid is being pumped through open first valves into a first well. [0043]. After fluid flow into the two wells has stabilized, Figure 2C

Claim	Krupa[6]
the second valve." **[27.5]**-"close the first valve after opening the second valve,"	shows the first valves to the first well 201a are closed after the second valve (223 or 224) of the second well 201b is opened ([0005], [0043]): 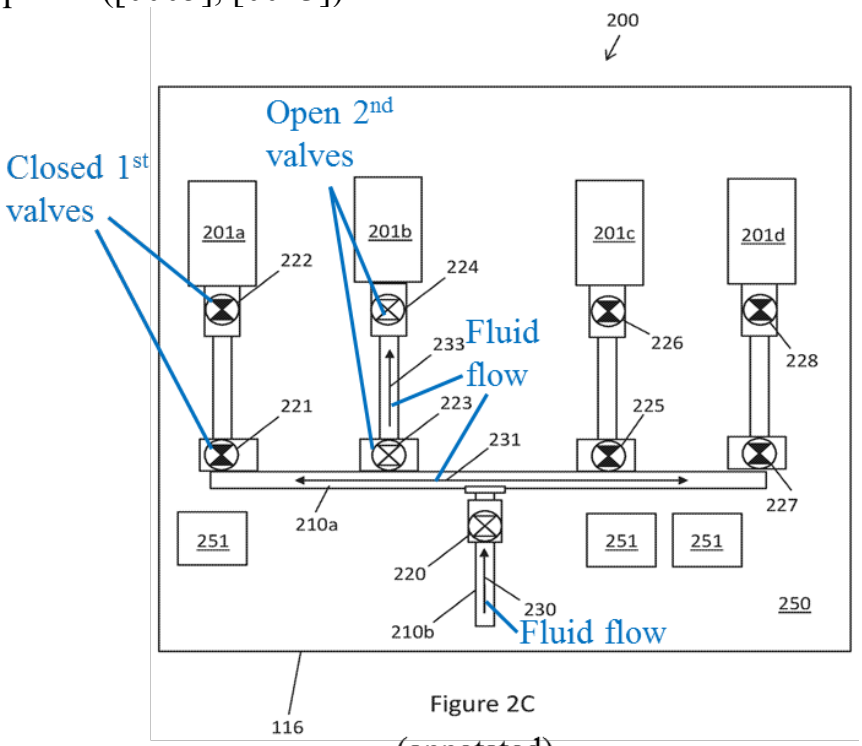 Figure 2C (annotated)

As shown, *Krupa* discloses every limitation of Claims 1, 14, and 27 as arranged in the claims. Thus, *Krupa* anticipates Claims 1, 14, and 27. Even if differences exist between *Krupa*'s disclosure and these Claims, they are clearly insubstantial, and *Krupa* would still render obvious these Claims' subject matter "as a whole." Ex. 1002, ¶¶ 122-136, 208-219, 252-269.

2. CLAIMS 2, 15, 28

Dependent claims 2(1)[7], 15(14), and 28(27) are discussed together. *Krupa* discloses their limitations:

Claim	Krupa
[2.1]/[15.1]-"The method of claim 1, further comprising:" / "The apparatus of claim 14, wherein, when the instructions are executed by the one or more processors, the following steps are also executed:" "communicating fluid to a third well via the manifold and a third valve, the third valve being associated with both the manifold and the third well; and" **[28.1]**-"The system of claim 27, further comprising: a	*Krupa's* systems include first-fourth wells (201a-d) coupled to a manifold, where valves positioned between each well and the manifold connection (210a) are adapted to control the flow of fluid into and out of each well. [0020]. In Figure 2D, when third valves (225/226) to the third well (201c) are open, fluid flows (234) from the manifold (210a) to the third well (201c) ([0044]): 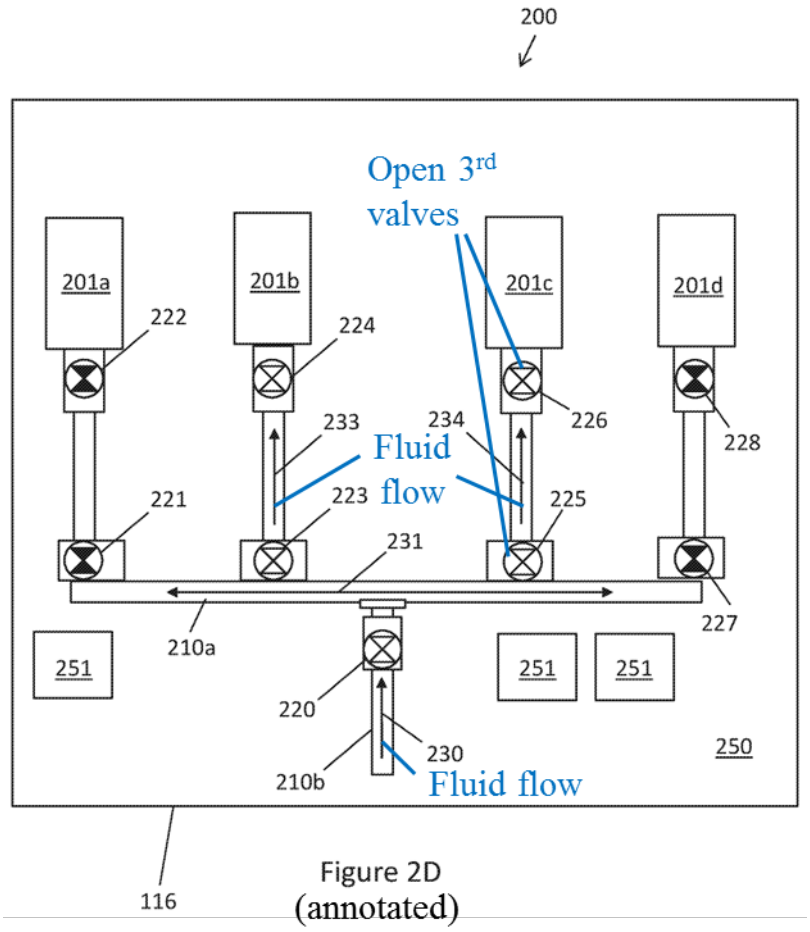 Figure 2D (annotated)

[7] Dependent claims are identified in the format "[dependent claim]([independent claim])" or "[dependent]([independent],[intervening dependent claim])".

Claim	Krupa
third valve via which fluid is communicated from the manifold to a third well;"	*Krupa*'s methods, including valve positioning, "may be executed on a computer processor" using "software instructions." [0030], [0032]-[0033].
[2.2]/[15.2]-"in response to determining that the fluid communicated via the manifold has satisfied the one or more conditions:" **[28.5]**-"in response to: determining that the fluid communicated via the manifold has satisfied the one or more conditions."	*Krupa* discloses that sensors are used to aid in carrying out a fracturing plan, for example, by using collected data "to create real-time logging of operational metrics, such as duration between various stages" and "to determine current job state and provide[] choices for possible stages." [0026]. For example, "[a]fter hydraulic fracturing operations are conducted on the third wellhead assembly 201c, flush fluids may be pumped into the third wellhead assembly 201c and the pump rate may be reduced once a total volume of the flush fluid has been pumped." [0045]. After reducing flowrate into the third well, and making sure the reduced flowrate is stable, the fracturing pumping plan is moved to the next step. [0042], [0045]. A POSITA would understand *Krupa's* flowrate limits and other metrics as examples of fluid conditions indicating when to move to a next step in a fracturing operation, which would include opening a fourth valve before closing the third valve. Ex. 1002, ¶¶ 141-143, 279-280.
[2.3]-[2.4]/[15.3]-[15.4]-"opening a fourth valve; communicating fluid to a fourth well via the fourth valve; and" **[28.2]**-"a fourth valve via which the fluid is adapted to be communicated to	In Figure 2F, fourth valves 227, 228 are opened while the third valves 225, 226 are still open to allow fluid to be pumped from the manifold 210a to the third and fourth wells ([0045]):

Claim	Krupa
a fourth well; and” **[28.3]**-“the one or more controllers, configured to: open the fourth valve to thereby communicate fluid to the fourth well via the fourth valve; and”	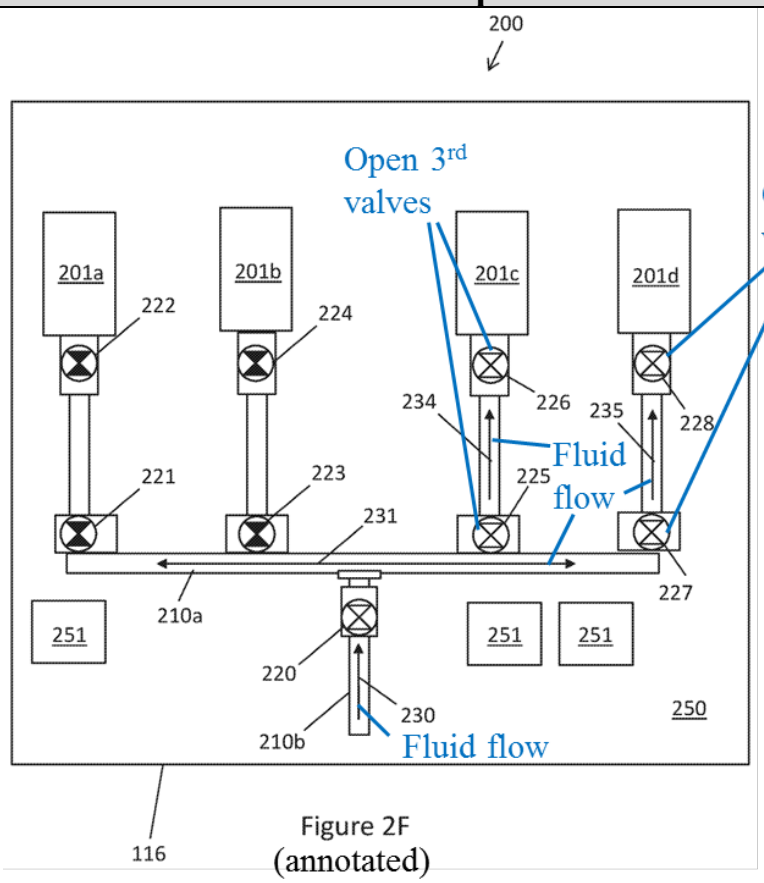 Figure 2F (annotated) *Krupa* discloses a controller or HMI of a computer system may be used to monitor and control the system’s valves according to a sequence of valve operations in a pumping plan, including opening/closing third and fourth valves. [0021], [0027], [0036], [0053].
<u>[2.5]/[15.5]-</u> “closing the third valve after opening the fourth valve.” **[28.4]**-“close the third valve after opening the fourth valve,”	“Once injection is established and pressure has stabilized in both the third wellhead assembly 201c and the fourth wellhead assembly 201d, the third… valves 225, 226 may be closed remotely to shut in the third wellhead assembly 201c” ([0045]):::

Claim	Krupa
	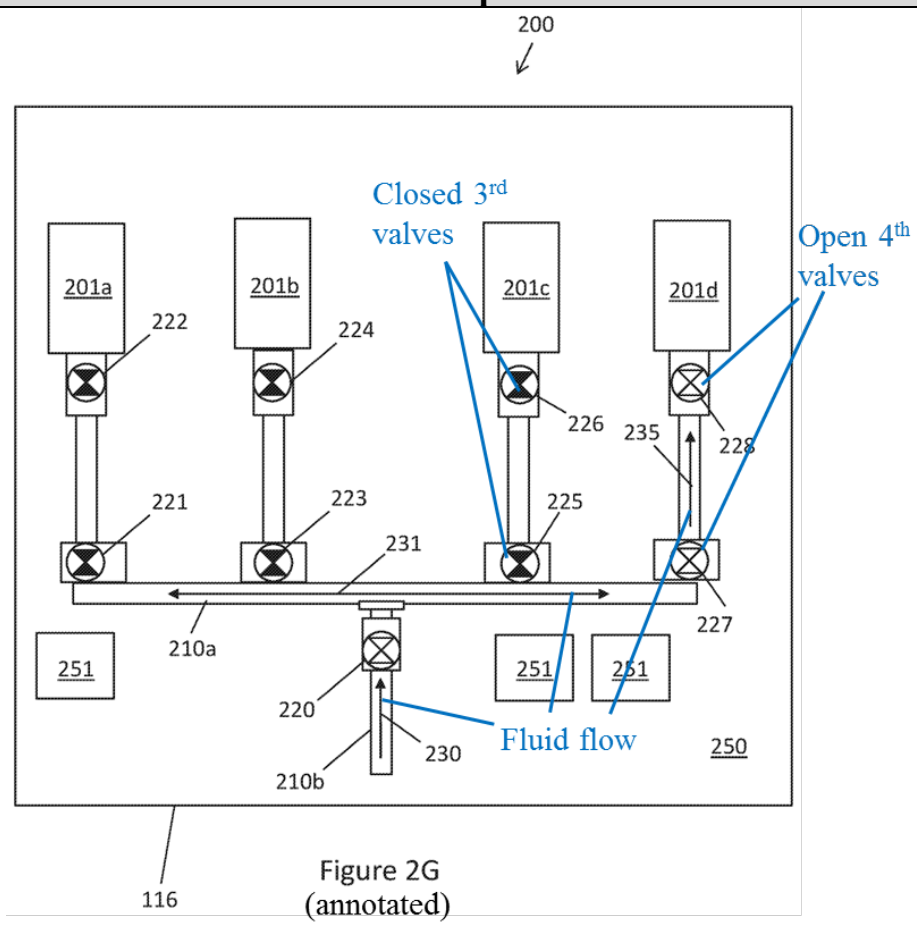 Figure 2G (annotated)

As shown, *Krupa* discloses every limitation of Claims 2, 15, and 28, as arranged in the claims. Thus, *Krupa* anticipates/renders obvious Claims 2, 15, and 28. Ex. 1002, ¶¶ 137-151, 220-225, 270-281.

3. CLAIMS 3, 16, 29

Claims 3(2,1), 16(15,14), and 29(28,27) are discussed together. Krupa discloses their limitations:

a. [3.1]/[16.1]-"The method of claim 2"/ "The apparatus of claim 15" "wherein the first valve is closed after opening both the second valve and the fourth valve; and/or"

[29.1]-"The system of claim 28, wherein the one or more controllers are further configured to: close the first valve after opening both the second valve and the fourth valve; and/or"

Krupa discloses operations between first-fourth wells 201a-201d, where fracturing plans "include automating valves within the hydraulic fracturing system to have a valve sequencing (e.g., opening and closing) to direct fluids (e.g., frac fluid) in a selected path and/or control pressure and pump rates within the system." *Krupa*, [0018]. A controller or HMI of a computer system may be used to control the system's valves according to the valve sequence. *Id*., [0021], [0027], [0036], [0053]. Figures 2A-2G's valve sequence includes opening/closing valves associated with the first-fourth wells in an overlapping sequence to hydraulically fracture the wells in an order from the first well 201a to the fourth well 201d. However, "the sequence may be conducted between any of the wellhead assemblies 201a-201d in any order," and "the sequence may be conducted from one wellhead assembly to a plurality of wellhead assemblies." *Id*., [0046]. Opening/closing valves "in any

order" to move fracturing operations from one well to many wells includes and therefore discloses closing a first valve to a first well after opening second and fourth valves to second and fourth wells.

If the Board determines *Krupa* does not explicitly disclose this limitation, a POSITA would find it obvious to close a first valve to a first well after opening second and fourth valves to second and fourth wells based on *Krupa's* disclosure that the valve sequences may be conducted "in any order" from one well to multiple wells. Ex. 1002, ¶¶ 153-154, 283-284.

b. [3.2]/[16.2]-"the third valve is closed after opening both the second valve and the fourth valve." [29.2]-"close the third valve after opening both the second valve and the fourth valve."

Krupa discloses an example valve sequence for operations for first-fourth wells 201a-d in Figures 2D-2G that includes:

1) opening third valves 225/226 to third well 201c while second valves 223/224 to second well 201b are opened (Figure 2D):

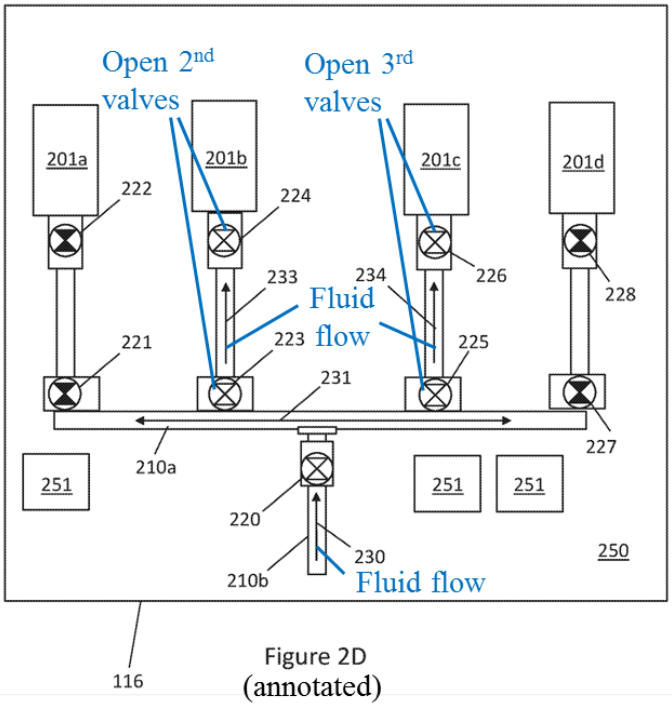

Figure 2D
(annotated)

2) closing second valves 223/224 to isolate and conduct fracturing operations on third well 201c (Figure 2E):

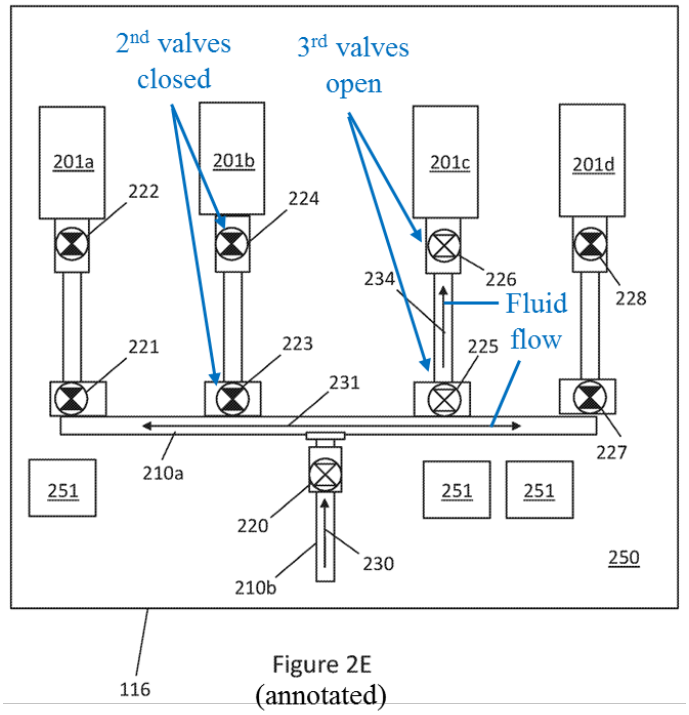

Figure 2E
(annotated)

3) next, opening fourth valves 227/228 while third valves 225/226 are still open (Figure 2F):

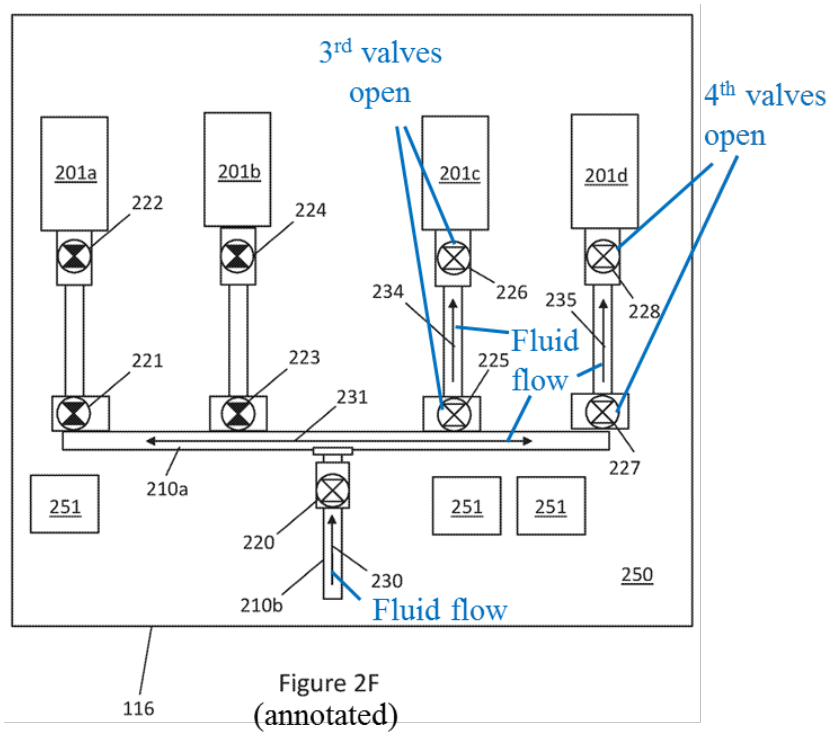

Figure 2F (annotated)

4) next, closing third valves 225/226 to isolate and conduct fracturing operations on fourth well 201d (Figure 2G):

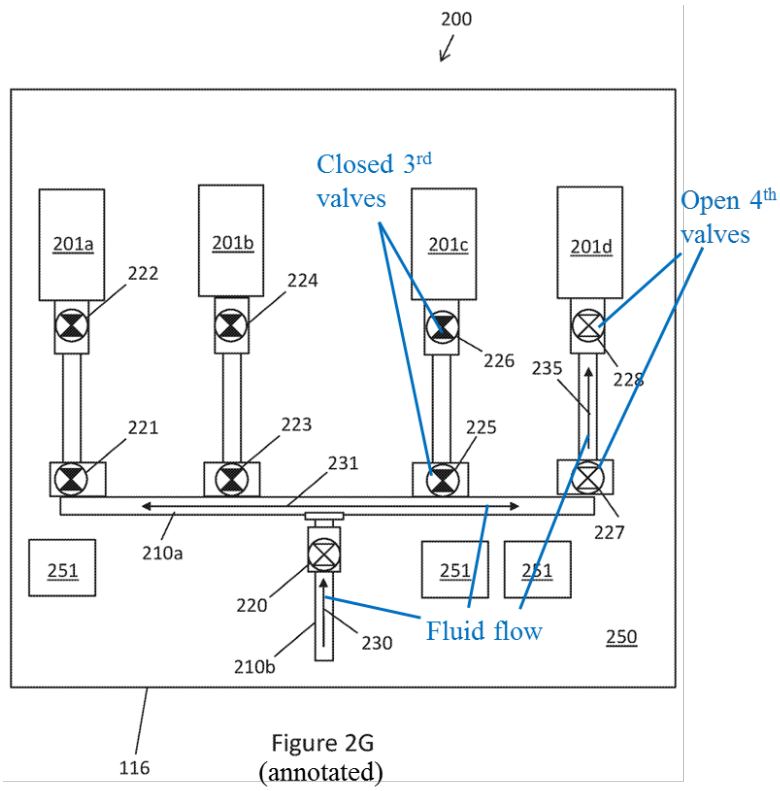

Figure 2G
(annotated)

Krupa, [0044], [0045].

Although the second valves (223/224) are also closed before closing the third valves (225/226), Limitations 3.2/16.2/29.2 do not require the second valves remain open when the third valves (225/226) are closed.

Further, as discussed above, Figures 2D-2G's example sequence is not limited. Instead, *Krupa* discloses "the sequence may be conducted between any of the wellhead assemblies 201a-201d *in any order*," (emphasis added) and "the

sequence may be conducted from one wellhead assembly to a plurality of wellhead assemblies." *Id*., [0046].

Thus, regardless of whether this limitation requires the second valves (223/224) remain open, *Krupa* discloses closing a third valve (225/226) after opening both a second valve (223/224) and a fourth valve (227/228).

Therefore, *Krupa* anticipates/renders obvious Claims 3, 16, and 29. Ex. 1002, ¶¶ 152-161, 226-229, 282-291.

4. CLAIMS 4, 17, 30-"wherein the one or more conditions include one or more flow rate conditions."

Claims 4(1), 17(14), and 30(27) are addressed together. Although these Claims purport to add a "flowrate" limitation, they are superfluous over Claims 1, 14, and 27 because flowrate is the only condition the specification describes.

As discussed in Section X.A.1, Krupa discloses the Claims' preambles ("method," "apparatus," and "system"). *Krupa* also discloses one or more conditions including flowrate. *Krupa* discloses using sensors, such as "gauges and meters for flow rate," "to determine a real-time condition of [system] devices, such as a valve." *Krupa*, [0014], [0048]. Sensors may be used for pump monitoring and flow-line monitoring and "may provide information such that a current state of the hydraulic fracturing operation…is obtained." *Id*., [0024], [0026].

In an example using flowrate parameters to indicate the state of a hydraulic fracturing operation and when to move to the next steps in the operation, *Krupa* discloses pumping fluid into a well "at a full pump rate, such as a rate of about 50-150 bbl/min," then reducing the fluid flow to a reduced rate of 5-15 bbl/min, and when it's determined that the reduced rate is stable, moving the "pumping plan to the next step." *Id*., [0042]. A POSITA would have known monitoring the pump rate was a common form of monitoring flowrate, as the pump rate is proportional to the flowrate and because using dedicated flow meters may be more costly. Ex. 1002, ¶ 165.

A POSITA would have understood *Krupa*'s flowrate limits as examples of flowrate conditions indicating when to move to a next step in a fracturing operation. *Id*., ¶¶ 164-166. For example, when the flowrate is reduced to 5-15 bbl/min (as measured using *Krupa's* sensors) and pressure is "stabilized at the reduced pump rate," "one or more conditions" of fluid pumped through a manifold are satisfied, and the pumping plan moves to the next step. *Krupa*, [0042]. Thus, *Krupa* discloses determining if fluid communicated via a manifold has satisfied one or more flowrate conditions.

Further, if the Board finds *Krupa* does not explicitly disclose "flow rate" as a condition, a POSITA would have found this limitation "obvious from the teachings of *Krupa* regarding measuring flowrates, a reduction in flow indicating the end of

the stage, and the subsequent 'move to the next step'" and "based on the general engineering knowledge of a POSITA." Ex. 1002, ¶¶ 154-162-167, 230-231, 292-293.

Thus, *Krupa* anticipates and/or renders obvious Claims 4, 17, and 30.

5. CLAIMS 5, 9, 18, 22, 31-"wherein the fluid communicated via the manifold has satisfied the one or more flow rate conditions when …" and "determining" same

Claims 5(1,4), 18(14,17), and 31(27,30) each recite, "wherein the fluid communicated via the manifold has satisfied the one or more flow rate conditions when a flow rate of the fluid is below an upper threshold, above a lower threshold, or both." Claims 9(8,1)[8] and 22(21,14) each recite, "determining that the fluid communicated via the manifold has satisfied the one or more flow rate conditions comprises determining that a flow rate of the fluid is below an upper threshold, above a lower threshold, or both." Thus, Claims 9/22 recite that the conditional limitation in Claims 5/18/31 has occurred. Accordingly, these claims are discussed together.

Krupa discloses using flowrate parameters to indicate the state of a fracturing operation and when to move to the next steps in the operation. *Krupa*, [0026], [0042]. In an example, a system pumps fluid into a well at a higher rate of "about 50-150 bbl/min," then reduces fluid flow to a lower rate of "5-15 bbl/min," and when

[8] Claim 9 lacks antecedent basis for "the…flow rate conditions," but is addressed anyways.

it's determined that the lower rate is stable, "the fracturing pumping plan [moves] to the next step." *Id*., [0042]. In this example, when the flowrate is stable between an upper flowrate threshold of 15 bbl/min and above a lower flowrate threshold of 5 bbl/min, flowrate conditions are satisfied, and the next step in the fracturing pumping plan may be initiated. Thus, *Krupa* discloses these limitations.

If the Board finds *Krupa* does not explicitly disclose this limitation, a POSITA would have found it obvious from the teachings of *Krupa* to use the measured flowrates to indicate flowrate conditions during a reduced flow sub-stage of pumping are satisfied, which may indicate the end of the stage, to "move to the next step" in the fracturing plan. Ex. 1002, ¶¶ 168-172, 183-185, 232-233, 240-241, 294-295.

Thus, *Krupa* anticipates and/or renders obvious Claims 5, 9, 18, 22, and 31.

6. CLAIMS 6, 19, 32-"wherein the fluid communicated via the manifold has not satisfied the one or more flow rate conditions when a flow rate of the fluid is above an upper threshold or below a lower threshold."

Claims 6(1,4), 19(14,17), and 32(27,30) are discussed together.

Krupa discloses monitoring flowrate conditions to determine a current state of the fracturing operation and when to move to the operation's next steps. *Krupa*, [0026], [0036], [0042]. A "fracturing pumping plan" includes "a sequence of valve operations to direct fluid flow through a selected path in one or more of the wellhead

assemblies and manifolds on the frac pad." *Id.*, [0036]. The instructions "have certain steps automatically proceed upon meeting certain system parameters." *Id.*, [0050]. Sensors communicate with the software application and the fracturing operation may be monitored and/or changed using sensor data. *Id.*, [0036]-[0037], [0054].

For example, when flowrate conditions of pumping fluid into a well between an upper threshold of 15 bbl/min and a lower threshold of 5 bbl/min are met, "the software application may move the fracturing pumping plan to the next step." [0042]. Conversely, when the flowrate is above the upper threshold of 15 bbl/min (e.g., "at a full pump rate…of about 50-150 bbl/min"), these flowrate conditions are not met.

A POSITA would understand that "this is standard practice for any flow system – if a measured flow rate is outside the required flow rate, then a flow rate condition is not met." Ex. 1002, ¶¶ 173-175, 234-235, 296-297.

Thus, *Krupa* anticipates/render obvious Claims 6, 19, and 32.

7. CLAIMS 7, 20-"pumping the fluid into the manifold."

Claim 20(14) recites "when the instructions are executed by the one or more processors, the [pumping step recited in 7(1)] is also executed." Thus, Claims 7(1) and 20(14) are discussed together.

Krupa discloses pumping "pressurized fracking fluid from one or more high pressure pumps," through a pump manifold 103 and a zipper manifold 102, via manifold connections, to multiple wells 101:

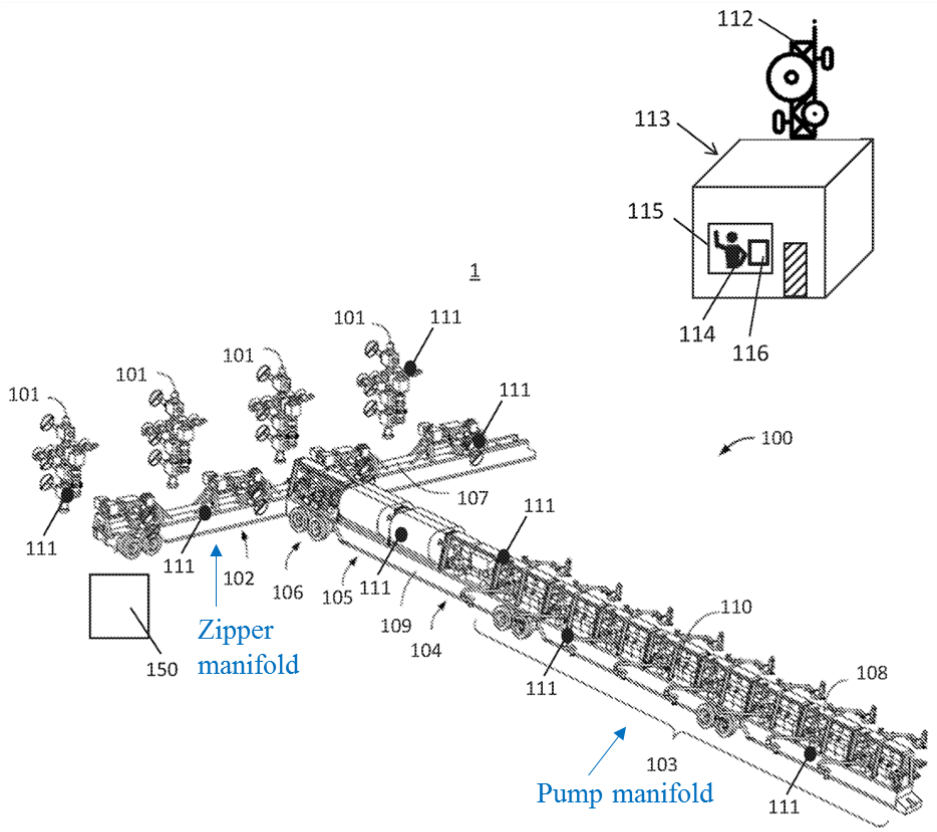

Figure 1
(annotated)

Krupa, [0019], [0023].

Krupa also discloses this "pumping" step is executed when the instructions are executed by processor(s) as recited in Claim 20. *Krupa* discloses "software instructions…executed by a processor(s), may perform" *Krupa*'s methods, including

those "associated with… automated hydraulic fracturing pumping systems." *Id.*, [0032].

Thus, *Krupa* anticipates/renders obvious Claims 7 and 20. Ex. 1002, ¶¶ 176-179, 236-237.

8. CLAIMS 8, 21-"determining that the fluid communicated via the manifold has satisfied the one or more conditions."

Claims 8(1) and 21(14) are addressed together and merely recite that the conditional limitation in the corresponding independent claims (Limitations 1.2/14.3) has occurred. *Krupa* also discloses this "determining" step is executed when the instructions are executed by processor(s) as recited in Claim 14. *Krupa* discloses "software instructions…executed by a processor(s), may perform one or any" of *Krupa*'s "systems features …including that associated with data interpretation and automated hydraulic fracturing pumping systems." *Krupa*, [0032].

In one example, a next stage in a fracturing operation is triggered when determined flowrate conditions are met:

> "When a frac stage of the first wellhead assembly…is at an end, a flush fluid may be pumped to flow…at a full pump rate, such as a rate of about 50-150 bbl/min, into the first wellhead assembly…. Once a total volume of the flush fluid is pumped, a pump rate may be reduced from the full pump rate…to 5-15 bbl/min. Once a pressure has stabilized at

the reduced pump rate, the software application may move the fracturing pumping plan to the next step." *Id*., [0042].

Thus, *Krupa* anticipates/renders obvious Claims 8 and 21. Ex. 1002, ¶¶ 180-182, 238-239.

9. CLAIMS 10, 13, 23, 26, 35, AND 38-"wherein the fluid communicated via the manifold is hydraulic fracturing fluid."

Claims 13(1,12), 26(14,25), and 38(27,37) recite the same Limitation as Claims 10(1), 23(14), and 35(27), except Claims 13(1,12), 26(14,25), and 38(27,37) depend from base claims reciting the fluid is also communicated via the manifold and the second valve. Thus, these Claims are discussed together.

Krupa discloses pumping "pressurized fracking fluid from one or more high pressure pumps," through a pump manifold and a zipper manifold, via manifold connections, to multiple wells, including first and second wells. *Krupa*, [0019]. Further, *Krupa*'s "fracturing plans may include automating valves within the hydraulic fracturing system to have a valve sequencing (e.g., opening and closing) to direct fluids (e.g., frac fluid) in a selected path and/or control pressure and pump rates within the system." *Id*., [0018].

Thus, *Krupa* anticipates/renders obvious Claims 10, 13, 23, 26, 35, and 38. Ex. 1002, ¶¶ 186-188, 206-207, 242-243, 250-251, 307-308, 315-316.

10. CLAIMS 11, 24, 36-"wherein: the first valve is a first zipper valve; and/or the second valve is a second zipper valve."

Claims 11(1), 24(14), and 36(27) are identical and merely label the first/second valves differently without imparting any distinguishable functionality or structure over what the Independent Claims recite.

Nor does the '770 Patent specification define or describe "zipper" valves as having any distinguishable feature from any other valve capable of allowing fluid flow into a well. Instead, the specification merely describes "zipper valves 170a-b (such as, for example, gate valves)" can "communicate fluid between," a zipper manifold and a well, and in some embodiments, may be part of the zipper manifold. '770, 7:60-8:1, 14:9-11, 23-26, 30-34, and 43-48, and associated figures.

Accordingly, *Krupa* discloses "zipper valves" for the same reasons *Krupa* discloses the claimed first and second valves.

Krupa's system's first/second valves are also zipper valves because they are coupled to a zipper manifold (102) and "may be closed to isolate wellhead assembly 101 from the flow of pressurized fluid within the zipper manifold 102 and pump manifold 103." *Krupa*, [0019], Figure 1. Therefore, *Krupa*'s first/second valves operate in the same manner as the zipper valves described in '770. Ex. 1002, ¶¶ 189-196, 244-245, 309-310.

Therefore, *Krupa* anticipates/renders obvious Claims 11, 24, and 36.

11. CLAIMS 12, 25, 37

Claims 12(1), 25(14), and 37(27) are discussed together. *Krupa* discloses each of their limitations:

a. [12.1]/[25.1]/[37.1]-"wherein the second valve is associated with both the manifold and the second well; and"

Krupa's system for fracturing first-fourth wells (201a-d) includes second valves 223/224 associated with and positioned between the second well 201b and the manifold connection 210a (*e.g.*, manifold connection to zipper manifold 102 in Figure 1), where the second valves are adapted to control the flow of fluid to the second well. *Id*., [0020], [0023], [0043].

b. [12.2]/[25.2]/[37.2]-"wherein communicating fluid to the second well via the second valve comprises communicating fluid to the second well via the manifold and the second valve."

Krupa's second valves 223/224 "are adapted to control the flow of fluid into and out of the wellhead." *Id*., [0020]-[0021]. In Figure 2B, fluid is pumped through a manifold 210a and through open second valves 223/224 into the second well 201b (*Id*., [0043)]:

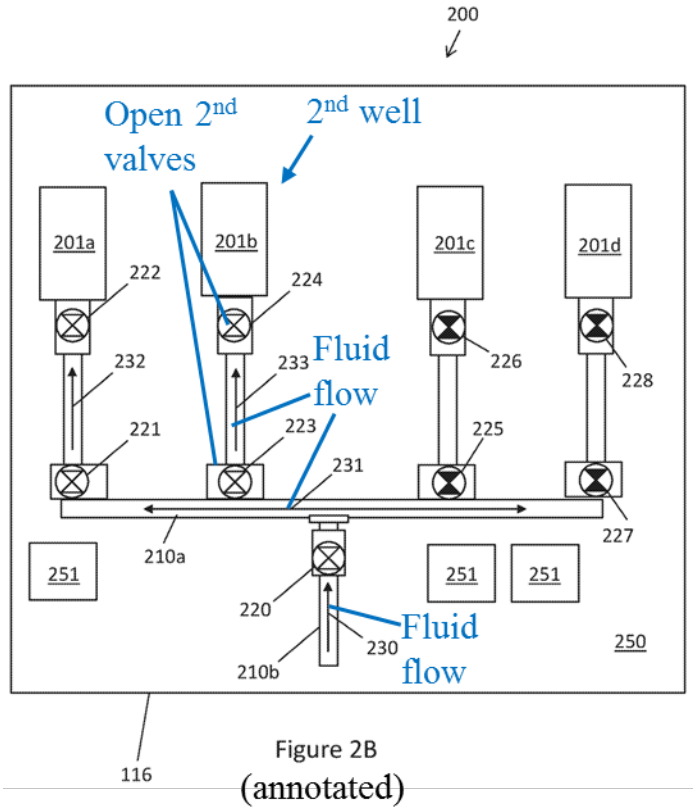

Figure 2B
(annotated)

Thus, *Krupa* discloses communicating fluid (*e.g.*, fluid flow 231, 233) to a second well (201b) via a manifold (210a) and an associated second valve (223 or 224). Ex. 1002, ¶¶ 197-205, 246-249, 311-314.

Thus, *Krupa* anticipates/renders obvious Claims 12, 25, and 37.

12. CLAIM 33-"further comprising the manifold."

Claim 33(27) superfluously recites the manifold recited in Claim 27 and is thus disclosed by *Krupa* for the same reasons discussed in Section X.A.1. See also, *Id*. ¶¶ 298-300.

Thus, *Krupa* anticipates and/or renders obvious Claim 33.

13. CLAIM 34-"further comprising one or more pumps; wherein the one or more controllers are further configured to cause the one or more pumps to pump the fluid into manifold."

Krupa discloses Claim 34(27). As shown in *Krupa*'s Figure 1, a "pump manifold 103 [is] fluidly connected to and receive[s] pressurized fracking fluid from one or more high pressure pumps (not shown), and direct[s] that pressurized fracking fluid to the zipper manifold 102," where the fluid is then directed to a selected well 101. *Krupa*, [0019].

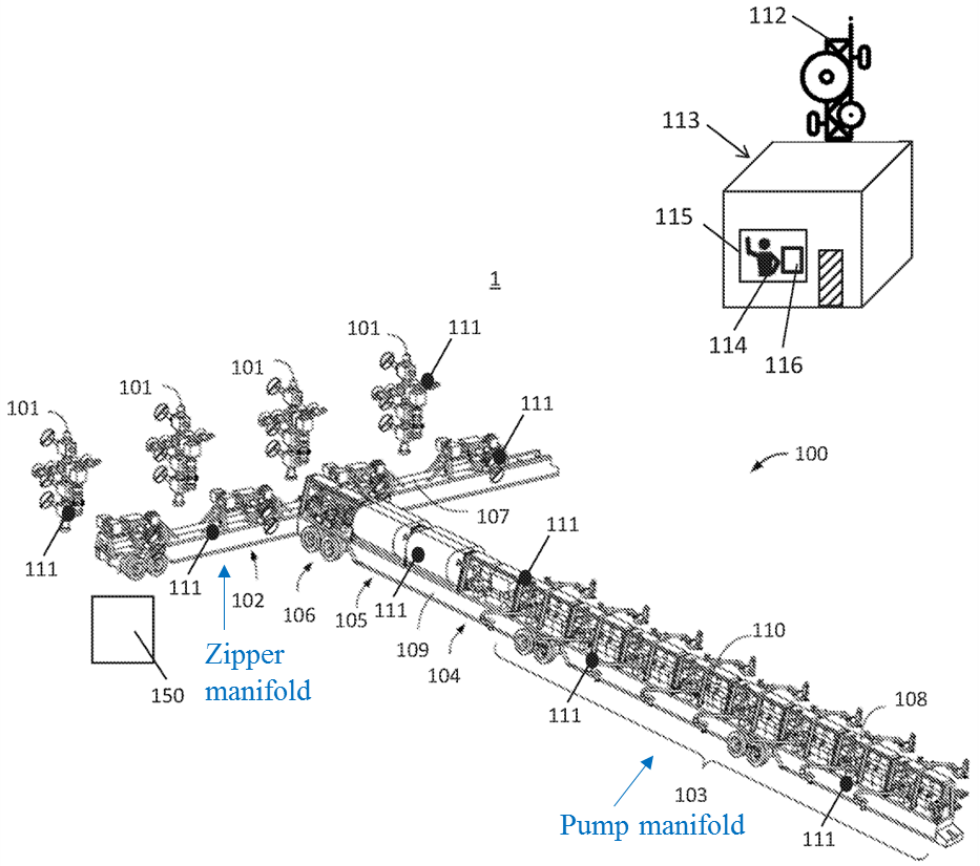

Figure 1
(annotated)

Krupa also discloses this "pumping" step is executed by controller(s). *Krupa* discloses a computer system HMI executing instructions of a hydraulic fracturing plan may be a "control panel" and/or other hardware component that allows "the operator 114 to interact through the HMI 116 with the built hydraulic fracturing pumping system." *Id*., [0027]. For example, the HMI allows an operator "to monitor, change, or shut down fracturing operations," e.g., "send permission requests to the operator 114 to perform various instructions from the fracturing pumping plan." *Id*., [0027], [0036].

Thus, *Krupa* discloses using a controller to operate pump(s), as claimed. Ex. 1002, ¶¶ 301-306. *Krupa* anticipates/renders obvious Claim 34.

B. GROUNDS 3 AND 4-CARR ANTICIPATES OR RENDERS OBVIOUS ALL CLAIMS

'770's Claims recite overlapping valve sequences for two or more wells in response to determining condition(s) of fluid communicated to a well. This is exactly what *Carr* discloses. For example, *Carr*'s Figure 5 shows a system for communicating fluid from a manifold 120 to multiple wells 140, 142 by operating valves 470, 472 associated with each well:

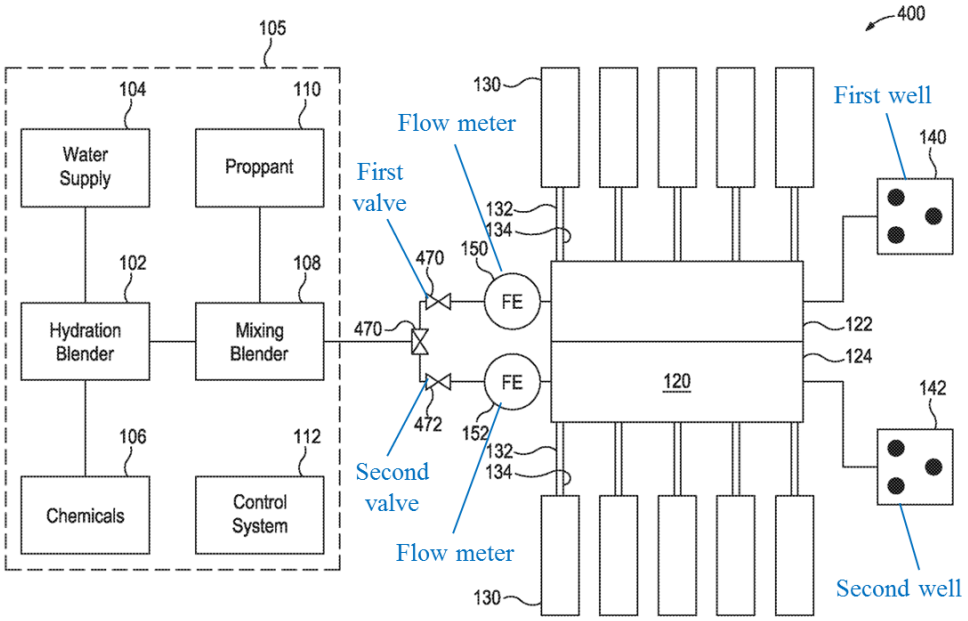

FIG. 5
(annotated)

Carr, Abstract. The manifold 120 may be a single integrated body with the valves 470, 472 located inside. *Id*., [0033], [0036].

Carr discloses "monitoring fluid flow from a centralized location to multiple wells" to "have enhanced control over the multiple wells while operating from a centralized location." *Id*., [0015]. For example, a control system may use flow information from first and second flow meters about fluid flow to the first and second wells "to control the position of the [valves]…in light of fluid flow targets for the first well 140 and/or the second well." *Id*., [0023], [0035].

1. INDEPENDENT CLAIMS 1, 14, AND 27

Carr discloses or suggests all limitations of these claims:

Claim	Carr[9]
[14.1]-"An apparatus, comprising: a non-transitory computer readable medium; and a plurality of instructions stored on the non-transitory computer readable medium and executable by one or more processors, wherein, when the instructions are executed by the one or more processors, the following steps are executed:"	*Carr* discloses a "central control system 112 may utilize sensor data …to identify operation of the well treatment facility." [0025]. *Carr* also discloses that system "information can be transmitted" to a controller, a display, and/or control system 112. [0020], [0024]. Operations in the multi-well system "are controlled, coordinated, and monitored by [the] central control system." [0025]. For example, the control system can "adjust the output of the pumps" and "control the position of" valves "in light of fluid flow targets for the first well 140 and/or the second well 142." [0025], [0035]. A POSITA would understand that a "control system" capable of receiving "transmitted" sensor data and "controll[ing], coordinat[ing], and monitor[ing]" the system, as described, refers to a typical computing system having instructions for the receiving, controlling, coordinating, and monitoring operations, which would be stored on a computer readable medium and executed by a processor. Ex. 1002, ¶¶ 393-396.
[1.1]/[14.2]-"A method, comprising: communicating fluid to a first well via a manifold and a first valve, the first valve being associated with both the manifold and the first well; and"	*Carr* discloses using a first valve 470 to control fluid flow to a first well 140 via a manifold 120:

[9] Bracketed 4-digit numbers in *Carr* claim charts refer to *Carr's* numbered paragraphs.

Claim	Carr[9]
[27.1]-"A system, comprising: a first valve via which fluid is communicated from a manifold to a first well;"	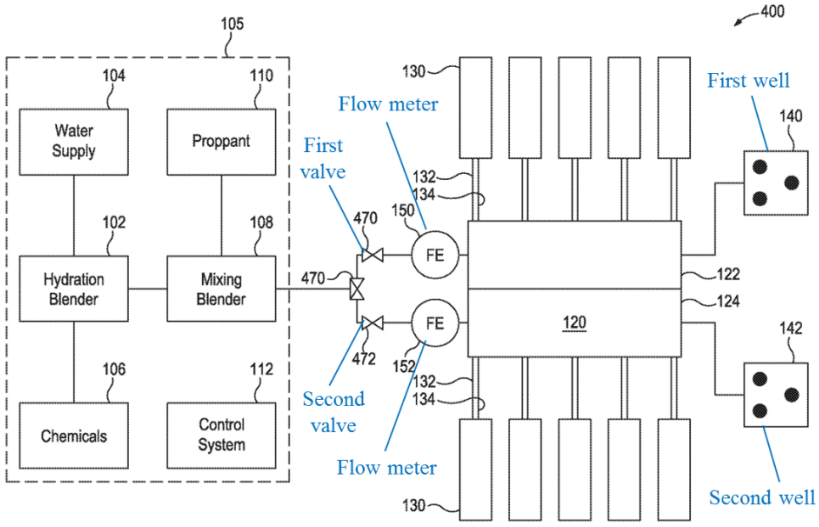 FIG. 5 (annotated) [0033]. *Carr*'s first valve 470 can be "disposed within the manifold 120," and "can be used to control the flow" of fluid from the manifold to the first well 140. [0033]. For example, the first valve 470 "can allow for the first well 140…to…be stimulated…by opening the respective first valve 470." [0033].
[27.2]-"a second valve via which fluid is adapted to be communicated to a second well; and"	*Carr*'s system includes a second valve that "can be utilized to control the flow" of fluid to a second well. [0033]. The second valve "can allow for…the second well 142 to…be stimulated…by opening…the second valve" and "can be used to control the flow rate" to the second well. [0033].
[27.3]-"one or more controllers, configured to:"	*Carr* discloses using "a central control system" to control, coordinate, and monitor system operations for treating the first and second wells, including the fluid source equipment, manifold, and/or pumps. [0025]. "The central control system 112 may utilize sensor data including information from the first flow meter 150 and the second flow meter 152 as well as operating parameters from [fluid source equipment], manifold 120, and pumps 130 to identify operation of the well treatment facility" and to adjust fluid flow to the wells. [0025]. Additionally, "the control system 112 can be utilized to control the position of" valves to the

Claim	Carr[9]
	wells using sensor data "in light of fluid flow targets for the first well 140 and/or the second well 142." [0035]. A POSITA would understand *Carr*'s "control system" used to adjust fluid flow and valve position to be a "controller." Ex. 1002, ¶ 443.
[1.2]/[14.3]-"in response to determining that the fluid communicated via the manifold has satisfied one or more conditions:" **[27.6]**-"in response to: determining that the fluid communicated via the manifold has satisfied one or more conditions."	"Flow measurements for the first well 140 and the second well 142 can" be collected via associated flow meters and transmitted to a control system. [0023]-[0024]. Information from the flow meters "can be utilized to control the production of fluid and the output of fluid to the first well 140 and the second well 142." [0025]. For example, operations of the manifold and/or pumps "are controlled, coordinated, and monitored by a central control system" using the collected sensor data. [0025]. This "allow[s] for enhanced control of treatment or fracturing" of the wells from a centralized well treatment facility. [0023]. Further, the control system can control fluid to the wells by controlling the position of the valves to the wells "utilizing flow data from the first flow meter 150 and the second flow meter 152 in light of fluid flow targets for the first well 140 and/or the second well 142." [0035].
[1.3]/[14.4]-"opening a second valve; communicating fluid to a second well via the second valve; and" **[27.4]-**"open the second valve to thereby	*Carr* discloses using a first valve and a second valve to control fluid flow to an associated well. [0033]. "The first valve 470 and the second valve 472 can allow for the first well 140 and the second well 142 to each be stimulated individually by opening the respective first valve 470 or the second valve 472 and closing the other valve." [0033]. As "fluid flows from a centralized location 105 to…the second well second 142 via the manifold 120…a second flow meter 152 in fluid communication with the second isolated manifold path 124 can provide an operator and/or a control system 112 with flow rate and total flow information." [0023].

Claim	Carr[9]
communicate fluid to the second well via the second valve; and"	
[1.4]/[14.5]- "closing the first valve after opening the second valve." **[27.5]**-"close the first valve after opening the second valve,"	*Carr* discloses pumping fluid alternatingly and/or simultaneously to a first and second well via associated first and second valves. "The first valve 470 and the second valve 472 can allow for the first well 140 and the second well 142 to each be stimulated individually by opening the respective first valve 470 or the second valve 472 and closing the other valve. Further, …the first valve 470 and the second valve 472 can be used to control the flow rate to the first well 140, the second well 142, or to both the first well 140 and the second well 142 simultaneously." [0033]. A POSITA would understand that operating the first and second valves to direct fluid into the associated first and second wells "individually" and/or "simultaneously," as taught by *Carr*, includes closing the valve to one well (e.g., to the first well) after opening the valve to the other well (e.g., to the second well). Ex. 1002, ¶¶ 331-332.

As shown, *Carr* discloses or suggests every limitation of Claims 1, 14, and 27 as arranged in the claims. Ex. 1002, ¶¶ 318-333, 392-401, 434-449.

Carr discloses opening/closing valves associated with wells to "individually" or "simultaneously" stimulate the wells. *Carr*, [0033]. *Carr* further discloses that the valves to each well can be controlled "in light of fluid flow targets" for the wells. [0035]. A POSITA would find it necessary and at least obvious to close a first valve to a first well after opening a second valve to a second well based on the fluid flow

targets to stimulate the first and second wells "individually" and "simultaneously." Ex. 1002, ¶¶ 331-332.

Thus, *Carr* anticipates/renders obvious Claims 1, 14, and 27.

2. CLAIMS 2, 15, 28

Claims 2(1), 15(14), and 28(27) recite already-analyzed limitations that are likewise applied to a third valve/well and fourth valve/well. *Carr* uses monitored flow data to control valve positions for multiple wells "to control the production of fluid and the output of fluid" to each well, individually and/or simultaneously. *Carr*, [0025], [0033], [0035]. Although *Carr* discloses examples with two wells, *Carr* discloses the methods and apparatuses may be used to treat "multiple wells." *Carr*, [0001], [0013]-[0016]. Application of *Carr*'s teachings to third and fourth wells and associated third and fourth valves in a multi-well system would have involved performing the same function in the same manner with predictable results. Ex. 1002, ¶¶ 334-345, 402-407, 450-458. Moreover, mere repetition of elements has no patentable significance unless a new and unexpected result is produced. *See, e.g.*, *In re Harza*, 274 F.2d 669 (CCPA 1960); and *Perfect Web Techs., Inc. v. InfoUSA, Inc.*, 587 F.3d 1324, 1330 (Fed. Cir. 2009).

Thus, *Carr* anticipates/renders obvious Claims 2, 15, and 28.

3. CLAIMS 3, 16, 29

As discussed in Section X.B.2, *Carr* monitors flow data to control valve positions for multiple wells, which may include first-fourth wells, to selectively control the output of fluid based on fluid flow targets to each well, individually and/or simultaneously. *Carr*, [0025], [0033], [0035]. Selectively directing fluid to first-fourth wells would include closing the first valve to a first well after opening both the second and fourth valves to their associated wells and/or closing the third valve to a third well after opening both the second and fourth valves to their associated wells. Ex. 1002, ¶¶ 346-354, 408-411, 459-462. Further, a POSITA would have found such valve sequencing obvious "in light of fluid flow targets" for each well in the multi-well system. *Id*.; *Carr*, [0035].

Thus, *Carr* anticipates/renders obvious Claims 3, 16, and 29.

4. CLAIMS 4, 17, 30

Carr discloses information collected from flow meters in the multi-well system "can be utilized to control…the output of fluid" to multiple wells. *Carr*, [0025]. For example, operations of the manifold valves and/or pumps "are controlled, coordinated, and monitored by a central control system" using the collected flowrate data. *Id*. This "allow[s] for enhanced control of treatment or fracturing of [the wells] while allowing for the benefits of a centralized well treatment facility." *Id.*, [0023]. Further, the control system can control fluid to the

wells by controlling the position of the valves to the wells "utilizing flow data from" flow meters associated with each well "in light of fluid flow targets." *Id*, [0035]. Thus, the conditions for flowing fluid into the wells include flowrate conditions. Ex. 1002, ¶¶ 355-357, 412-413, 463-464.

Thus, *Carr* anticipates/renders obvious Claims 4, 17, and 30.

5. CLAIMS 5, 9, 18, 22, AND 31

Carr discloses the control system can control fluid flow to multiple wells by controlling pump output and the wells' valves' positions "utilizing flow data from" flow meters associated with each well "in light of fluid flow targets." *Carr*, [0025], [0035]. For example, flow meter data "can be utilized to control desired fluid properties such as…rate." *Id.*, [0025].

A POSITA would understand that "fluid flow targets" would necessarily include an upper threshold, a lower threshold, or both. Ex. 1002, ¶ 359. Thus, by *Carr*'s disclosure of controlling flow to well(s) "in light of fluid flow targets," *Carr* inherently discloses satisfying flow rate conditions when the fluid flow rate is below an upper threshold, above a lower threshold, or both. *Id.*, ¶¶ 358-361, 371-372, 414-415, 422-423, 465-466.

Thus, *Carr* anticipates and/or renders obvious Claims 5, 9, 18, 22, and 31.

6. CLAIMS 6, 19, AND 32

Carr discloses using a control system to control fluid flow to multiple wells by controlling pump output and the wells' valves' positions "utilizing flow data from" flow meters associated with each well "in light of fluid flow targets." *Carr*, [0025], [0035]. A POSITA would understand that controlling fluid flow to wells using fluid flow targets would necessarily include maintaining flow within an upper and/or lower threshold to satisfy fluid flow within the target. Ex. 1002, ¶ 363. Conversely, when the flowrate is outside the target range (above the upper threshold or below the lower threshold of the range), flowrate conditions are not met. *Id*. In other words, if a measured flowrate is outside a target range, then the flowrate condition is not met. *Id*.

Thus, *Carr* anticipates/renders obvious Claims 6, 19, and 32. Id., ¶¶ 362-364, 416-417, 467-468.

7. CLAIMS 7, 20

Carr discloses pumping fluid through a manifold (120), which "can include various valves and sensors," to "allow multiple wells to be fractured or treated simultaneously." *Carr*, [0021], [0031].

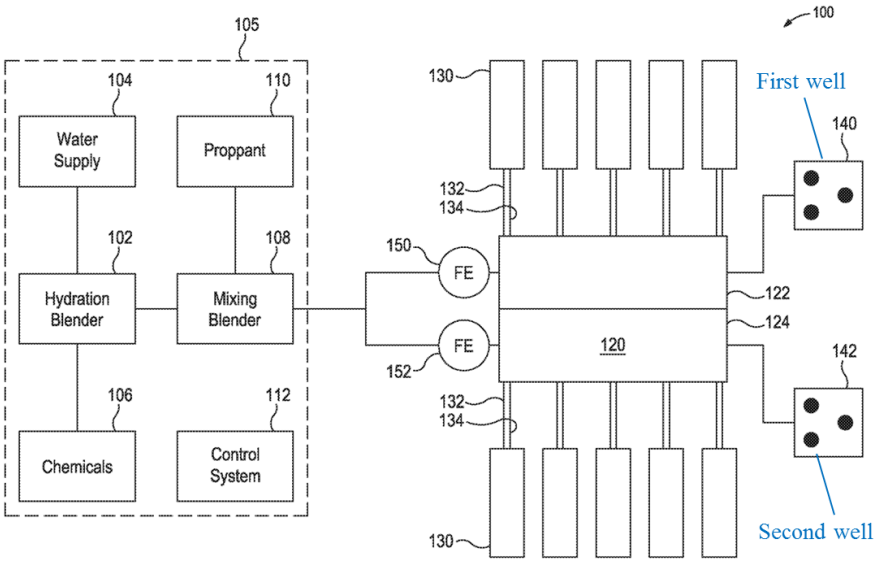

FIG. 1
(annotated)

Carr's control system can control the fluid pumping operations. *Id.*, [0025].

Thus, *Carr* anticipates/renders obvious Claims 7 and 20. Ex. 1002, ¶¶ 365-367, 418-419.

8. CLAIMS 8, 21

Claims 8(1) and 21(14) merely recite that the conditional determining limitation in the corresponding independent claims has occurred. Thus, for the same reasons provided with Independent Claims 1/14, *Carr* discloses determining that the fluid communicated via the manifold has satisfied condition(s). *Id.*, ¶¶ 368-370, 420-421. *Carr* also discloses this step is executed by processor(s) according to instructions as recited in Claim 14. *Carr* discloses a "central control system 112

may utilize sensor data…to identify operation of the well treatment facility," and may generally control, coordinate, and monitor the multi-well system. *Carr*, [0025].

A POSITA would understand that *Carr*'s "control system" refers to a typical computing system having instructions for the controlling, coordinating, and monitoring operations, which would be stored on a computer readable medium and executed by a processor. Ex. 1002, ¶ 421.

Thus, *Carr* anticipates and/or renders obvious Claims 8 and 21.

9. CLAIMS 10, 13, 23, 26, 35, 38

Carr discloses a blender blends "proppant and chemical additives into [a] base fluid" to provide a "fracturing fluid." *Carr*, [0019]. The fracturing fluid is then pumped through a manifold 120 to selected wells, including first and second wells:

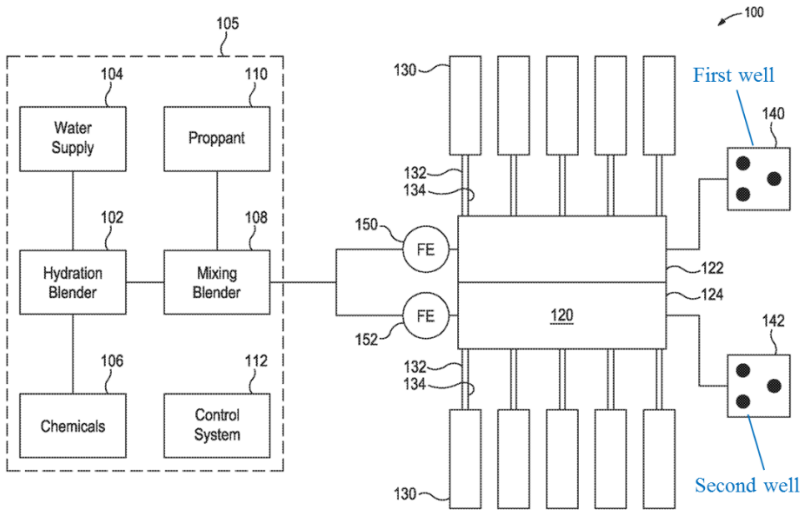

FIG. 1
(annotated)

Id., [0021]-[0022].

Thus, *Carr* anticipates/renders obvious Claims 10, 13, 23, 26, 35, and 38. Ex. 1002, ¶¶ 373-375, 390-391, 424-425, 432-433, 477-478, 485-486.

10. CLAIMS 11, 24, 36

Claims 11, 24, and 36 merely label the first/second valves differently without imparting any distinguishable functionality or structure over what the independent claims recite. Additionally, "zipper valves" are not distinguished from any other valve capable of allowing fluid flow into a well (e.g., a gate valve) by '770's specification (*see* Section X.A.10).

Carr's valves are also capable of controlling fluid flow into individual wells by opening/closing the valves and may be part of the manifold directing flow to the wells. *Carr*, [0033]. Accordingly, *Carr* discloses "zipper valves" for the same reasons *Carr* discloses the claimed first/second valves. Ex. 1002, ¶¶ 376-383, 426-427, 479-480.

Thus, *Carr* anticipates and/or renders obvious Claims 11, 24, and 36.

11. CLAIMS 12, 25, 37

Carr discloses using a first valve to control fluid flow to a first well and a second valve to control fluid flow to a second well via a manifold:

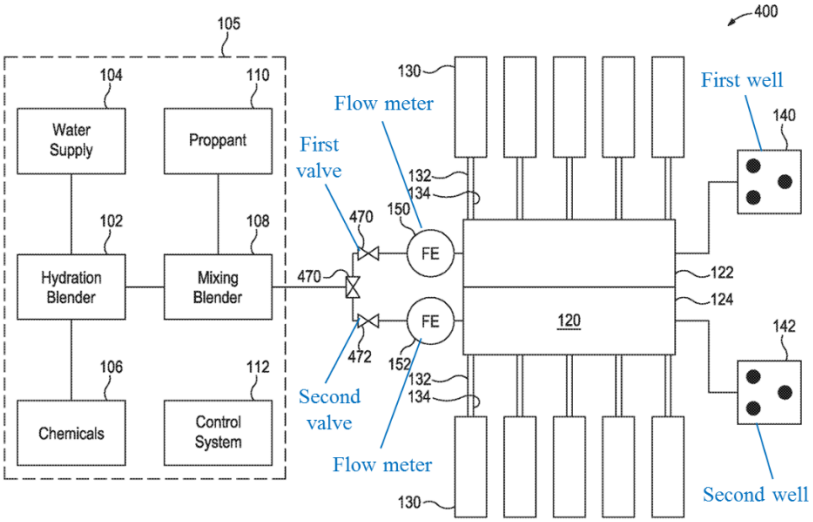

FIG. 5
(annotated)

Carr.

"The first valve 470 and the second valve 472 can be disposed within the manifold 120," and "allow for the first well 140 and the second well 142 to each be stimulated individually by opening the respective first valve 470 or the second valve 472 and closing the other valve." *Id*.

Thus, *Carr* anticipates/renders obvious Claims 12, 25, and 37. Ex. 1002, ¶¶ 384-389, 428-431, 481-484.

12. CLAIM 33

Claim 33(27) superfluously recites Claim 27's manifold and is thus disclosed by *Carr* for the same reasons discussed in Section X.B.1. Ex. 1002, ¶¶ 469-471.

Carr therefore anticipates/renders obvious Claim 33.

13. CLAIM 34

Carr discloses pumps 130 pump fluid through a manifold to "allow multiple wells to be fractured or treated simultaneously" (*Carr*, [0021]-[0022]):

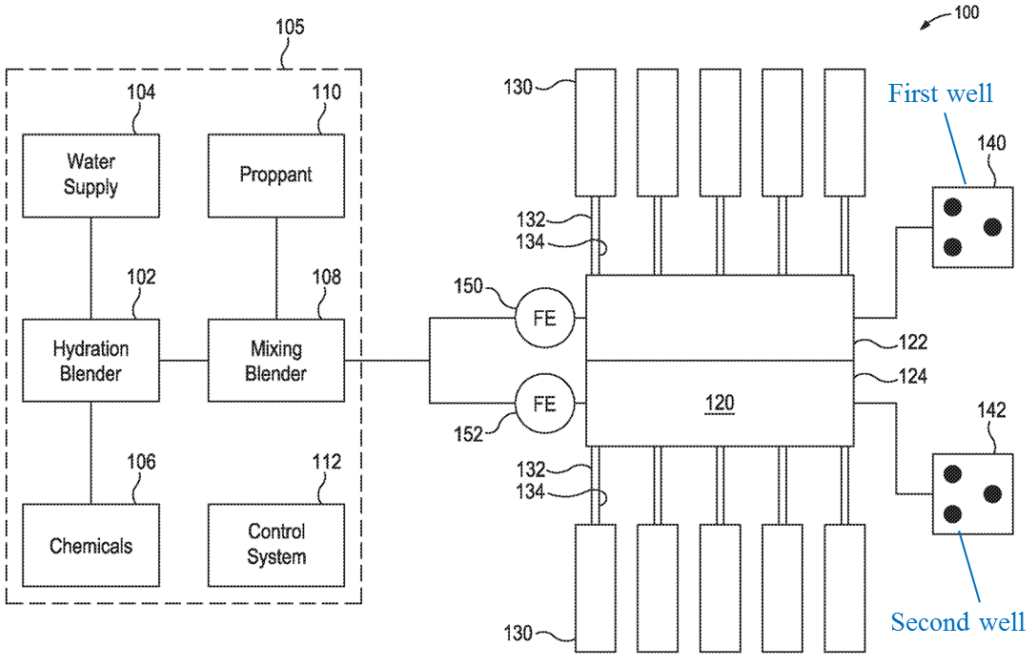

FIG. 1
(annotated)

Carr's "central control system" controls, coordinates, and monitors system operations for treating the first and second wells, including the fluid source equipment, manifold, and/or pumps. *Id.*, [0025]. A POSITA would understand *Carr*'s "control system" to be a "controller." Ex. 1002, ¶ 475.

Carr therefore anticipates/renders obvious Claim 34. *Id.*, ¶¶ 472-476.

C. GROUND 5-CARR IN VIEW OF BEUTERBAUGH

As discussed in Section X.B., *Carr* discloses/suggests every limitation of Claims 1-38. *Carr* also renders obvious Claims 1-38 in view of *Beuterbaugh*.

1. INDEPENDENT CLAIMS 1, 14, 27

a. Limitations 1.1-1.3, 14.2-14.4, 27.1-27.2, 27.4, 27.6

Carr discloses Limitations 1.1-1.3, 14.2-14.4, 27.1-27.2, 27.4, and 27.6 for the reasons discussed in Section X.B.1.

b. Limitations 14.1, 27.3

While *Carr* inherently or obviously discloses Limitations 14.1 and 27.3, *Beuterbaugh* explicitly discloses them. *Beuterbaugh* discloses controlling valves and other components in the system using "a computerized controller:"

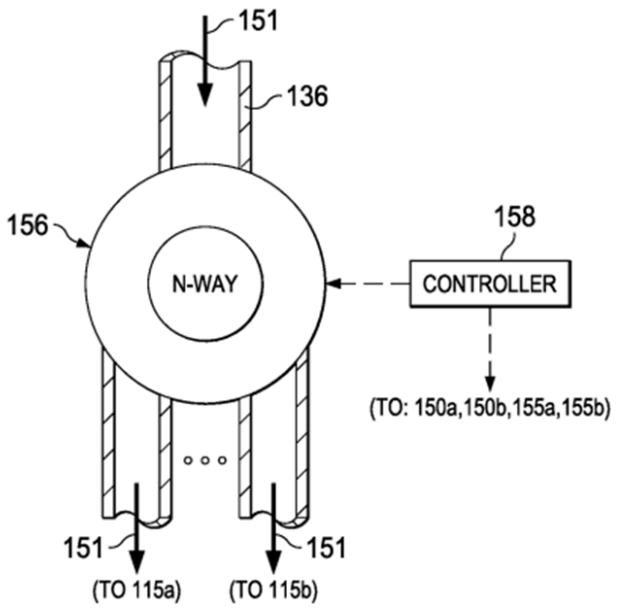

FIG. 4

Beuterbaugh, [0022], [0025].

The controller has "a computer processor connected by a bus to a memory," where the memory includes "a software program for performing the control and operational sequencing of the components, including the sequencing of opening and closing…valves." *Id*., [0025].

It would have been obvious to use *Beuterbaugh*'s computer system and controller in *Carr*'s "central control system" to control the multi-well system taught in either *Carr* or *Beuterbaugh* as a simple substitution of one known element for another, performing the same function with predictable results. Ex. 1002, ¶¶ 488-495.

c. Limitations 1.4, 14.5, 27.5

Alternating valve sequencing for directing fluid into multiple wells was a known technique for stimulating wells individually and/or simultaneously. For example, *Beuterbaugh* teaches methods for treating a plurality of wells that include pumping "fracturing fluid to one or more switching valves and repeatedly opening and closing the one or more switching valves to divert the fracturing fluid…from one well to the other well...for fracturing subterranean formations." *Beuterbaugh*, Abstract. *Beuterbaugh*'s valve sequencing includes:

1) "as a first state, opening [first] switching valve 150a and [first] plug valve 155a such that the flow rate of the fracturing fluid…is directed to the first wellhead 115a, delivering a pulse, while [second] switching valve 150b

and associated [second] plug valve [155b] are closed preventing fluid flow 151 to the second wellhead 115b." *Id.*, [0021].

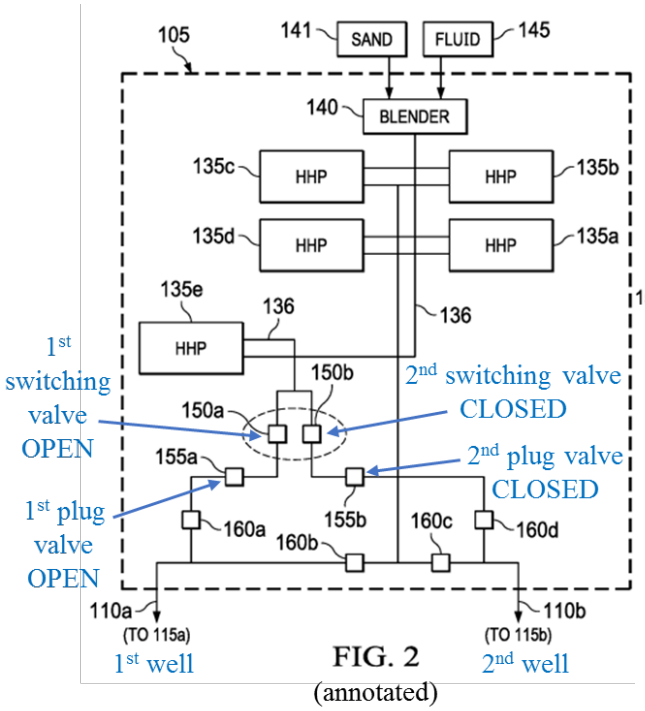

FIG. 2
(annotated)

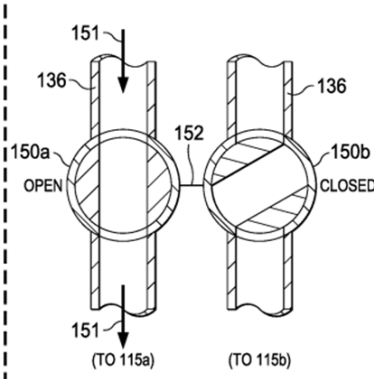

FIG. 3A

2) "[n]ext…opening the [second] plug valve 155b downstream of the [second] switching valve 150b" and "then [second] switching valve 150b is opened as [first] switching valve 150a is being closed." *Id.*

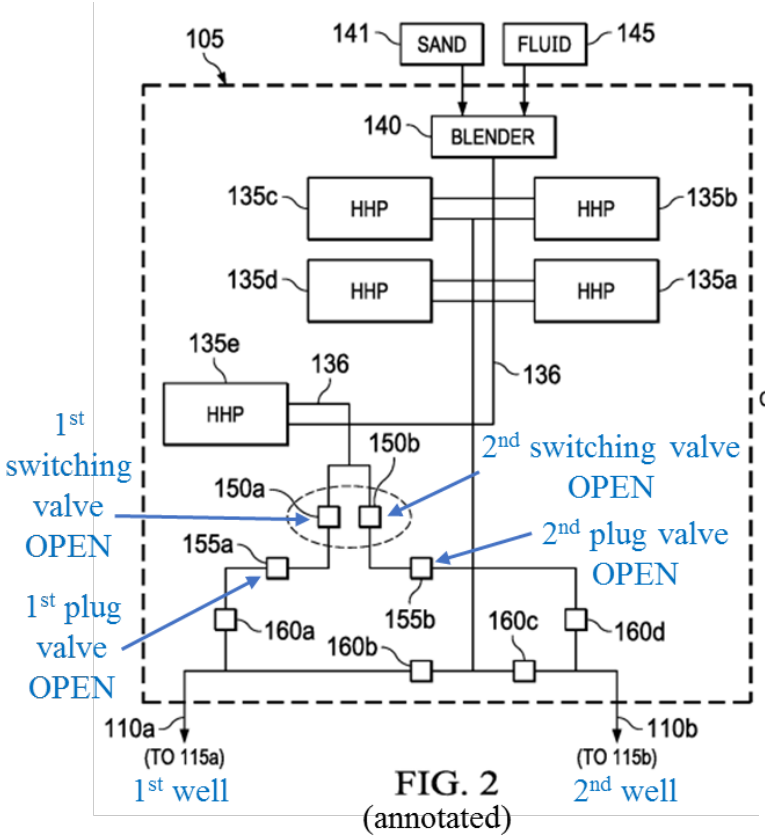

FIG. 2
(annotated)

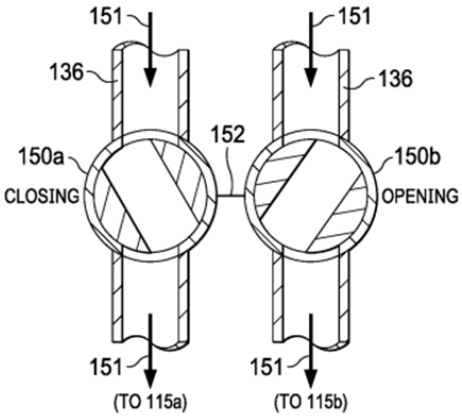

FIG. 3B

3) "After [second] switching valve 150b is fully opened and [first] switching valve 150a is fully closed" and a fluid pulse is sent down second well 120b, "the [first] plug valve 155a downstream of [first] switching valve 155a is closed." *Id*.

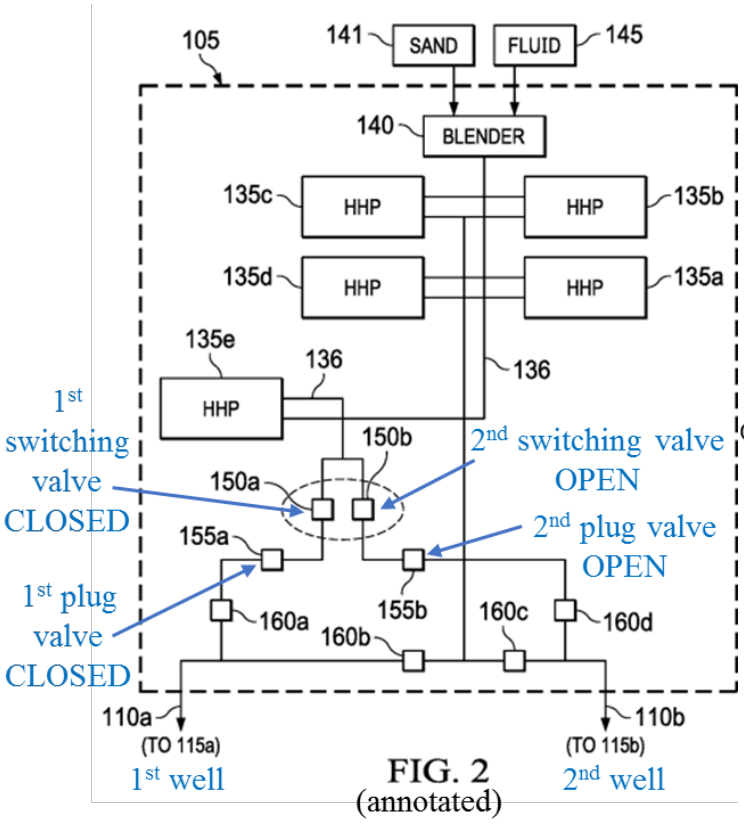

FIG. 2
(annotated)

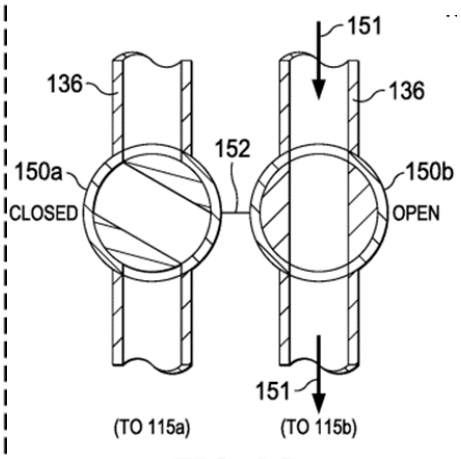

FIG. 3C

A POSITA would have found it obvious to use *Beuterbaugh*'s alternating valve sequences to fracture multiple wells individually and/or simultaneously based on fluid flow targets in *Carr*'s multi-well system. Ex. 1002, ¶¶ 496-512. *Beuterbaugh*'s valve sequencing allows the "overlap of fluid flows to each well [to] be controlled to optimize the downhole pressure waves and minimize the surface impacts." *Beuterbaugh*, [0024]. Further, *Beuterbaugh*'s valve sequencing between alternating switching valves and associated plug valves allows "absolute shut off of fracturing fluid" by the plug valves upon switching wells "in case there is some leakage from the associated switching valve[s]." *Id.*, [0019]. A POSITA would have found it obvious as a simple substitution to use *Beuterbaugh*'s valve

sequencing in *Carr*'s system to perform the same function (opening/closing valves to selectively divert fluid to a well) with predictable results. Ex. 1002, ¶¶ 488-495.

Further, it would have been obvious to use *Beuterbaugh*'s computer system and controller for operating the valve sequencing in *Carr*'s multi-well system to individually and/or simultaneously treat wells based on fluid flow targets. *Id*.

Therefore, *Carr* in view of *Beuterbaugh* renders Claims 1, 14, and 27 obvious.

2. CLAIMS 2, 15, 28

Claims 2(1), 15(14), and 28(27) recite already-analyzed limitations that are likewise applied to a third valve/well and fourth valve/well. *Carr* uses monitored flow data to control valve positions for multiple wells "to control the production of fluid and the output of fluid" to each well, individually and/or simultaneously. *Carr*, [0025], [0033], [0035]. *Beuterbaugh* also discloses an alternating and overlapping valve sequence used to deliver fluid to multiple wells. *Beuterbaugh*, [0048]. A POSITA would have found it obvious to use *Beuterbaugh*'s valve sequencing on third and fourth wells and associated valves in the same manner as described with the first and second wells and associated valves, as *Beuterbaugh* teaches valves may be operated "in similar sequential fashion" to selectively deliver fluid pulses to more than two wells. *Beuterbaugh*, [0028], [0048]-[0049]. Further, it has been held that mere repetition of elements has no patentable significance unless a new and

unexpected result is produced. *See, e.g.*, *In re Harza*, 274 F.2d 669, (CCPA 1960); and *Perfect Web*, 587 F.3d at 1330.

Carr in view of *Beuterbaugh* therefore renders Claims 2, 15, and 28 obvious. Ex. 1002, ¶¶ 513-517.

3. CLAIMS 3, 16, 29

Carr monitors flow data to control valve positions for multiple wells to selectively control the output of fluid based on fluid flow targets to each well, individually and/or simultaneously. *Carr*, [0025], [0033], [0035]. *Beuterbaugh* discloses an alternating valve sequence, which may be controlled using "a computerized controller," for directing fluid into multiple wells individually and/or simultaneously. *Beuterbaugh*, Abstract, [0021]-[0022]. *Beuterbaugh* also discloses valves may be operated "in similar sequential fashion" and synchronized to deliver fluid pulses selectively and alternatingly to more than two wells. *Id.*, [0028], [0048]-[0049]. Applying *Beuterbaugh*'s alternating and overlapping valve sequence to first-fourth wells and associated valves would have included closing a first valve and/or a third valve to associated well(s) after opening second and fourth valves to associated second and fourth wells with the predictable results of alternatingly delivering fluid pulses to selected wells in the multi-well system. Ex. 1002, ¶ 518-524.

Thus, *Carr* in view of *Beuterbaugh*, renders Claims 3, 16, and 29 obvious.

Because *Carr* discloses all remaining claims (*see* Section X.B), *Carr* in view of *Beuterbaugh* renders all claims obvious.

D. GROUND 6-CARR IN VIEW OF BEUTERBAUGH AND JACKSON RENDERS CLAIMS 5, 6, 9, 18, 19, 22, 31 and 32 OBVIOUS

These claims include similar flowrate-conditions limitations and concern flowrate thresholds either being met (Claims 5, 9, 18, 22, and 31) or not met (Claims 6, 19, and 32). If the Board determines that *Carr*, with or without *Beuterbaugh*, lacks sufficient disclosure/teaching of flowrate thresholds as a fluid condition, *Jackson* explicitly discloses flowrate thresholds as a condition monitored in controlling valves for injecting fluid into a wellbore and associated formation. *Jackson* describes "introducing a supply of fracturing fluid to the formation until a first threshold is reached, adjusting the flow…to reach a second threshold, adjusting the flow to reach a third threshold, and ceasing…of the fracturing fluid to the formation…." Ex. 1007, [0003]. *Jackson* further discloses the use of upper and lower thresholds (*e.g.*, "first threshold may be…a flow rate…of at least 300 scm"; "second threshold may be…flow rate…less than 300 scm…."). Ex. 1007, [0020]-[0021].

A POSITA would have been motivated to combine, with a reasonable expectation of success, *Jackson*'s teachings of flowrate thresholds as a condition to move to the next step of a fluid handling operation with *Carr*'s and *Beuterbaugh*'s method/apparatus/system. Ex. 1002, ¶¶ 526-529. An operator obviously would have

included *Jackson*'s thresholds in the systems/methods of *Carr*, or *Carr* and *Beuterbaugh*, for example, to determine when to move to the next fluid handling operation step (as in *Jackson*) and when to operate the valves (as in *Carr*). *Id.*, ¶¶ 531-533.

Because *Jackson* discloses meeting certain flowrate thresholds, *Jackson* also discloses that when the flowrate upper/lower thresholds are not met, the measured flowrate "has not satisfied the one or more flow rate conditions." Ex. 1002, ¶¶ 534-537. Indeed, "this is standard practice for any flow system—if a measured flowrate is outside the required flowrate, then a flowrate condition is not met." Ex. 1002, ¶ 537.

Accordingly, *Carr*, *Beuterbaugh*, and *Jackson* render Claims 5, 6, 9, 18, 19, 22, 31 and 32 obvious. *Id.*, ¶¶ 525-538.

E. GROUNDS 7 AND 8-TOLMAN ANTICIPATES/RENDERS OBVIOUS ALL CLAIMS

1. INDEPENDENT CLAIMS 1, 14, 27

Tolman discloses or suggests all limitations in these claims:

Claim	Tolman[10]
[14.1]-"An apparatus, comprising: a non-transitory computer	*Tolman* discloses "automated devices, such as processor-based devices, which are utilized for…stimulation operations." 14:3-5. For example, systems "may be automated and controlled by a processor-based device, such as a computer system," which may have well "treatment

[10] [column]:[line] citations in *Tolman*'s claim chart refer to *Tolman's* numbered columns and lines.

Claim	Tolman[10]
readable medium; and a plurality of instructions stored on the non-transitory computer readable medium and executable by one or more processors, wherein, when the instructions are executed by the one or more processors, the following steps are executed:"	schedules…pre-programmed into the computer system." 14:6-12. "The computer system…may include mechanisms to adjust the valves…between the open and closed positions[] and communicate with the various gauges" in a multi-well system. 14:13-16, 20-21. A POSITA would understand that the processor-based computer system having pre-programmed well-treatment schedules would necessarily include the pre-programmed instructions stored on a non-transitory computer readable medium executable by the computer system's processor(s). Ex. 1002, ¶ 629.
[1.1]/[14.2]-"A method, comprising: communicating fluid to a first well via a manifold and a first valve, the first valve being associated with both the manifold and the first well; and" **[27.1]**-"A system, comprising: a first valve via which fluid is communicated from a manifold to a first well;"	*Tolman* discloses a multi-well system including a manifold "configured to provide a flow path from the stimulation fluid pumping system into at least one selected well." 2:46-50. The flow paths are selected/managed by operating valves, such as manifold well valves 214, 216, 218 associated with each well's tree 106a-106c:

Claim	Tolman[10]
	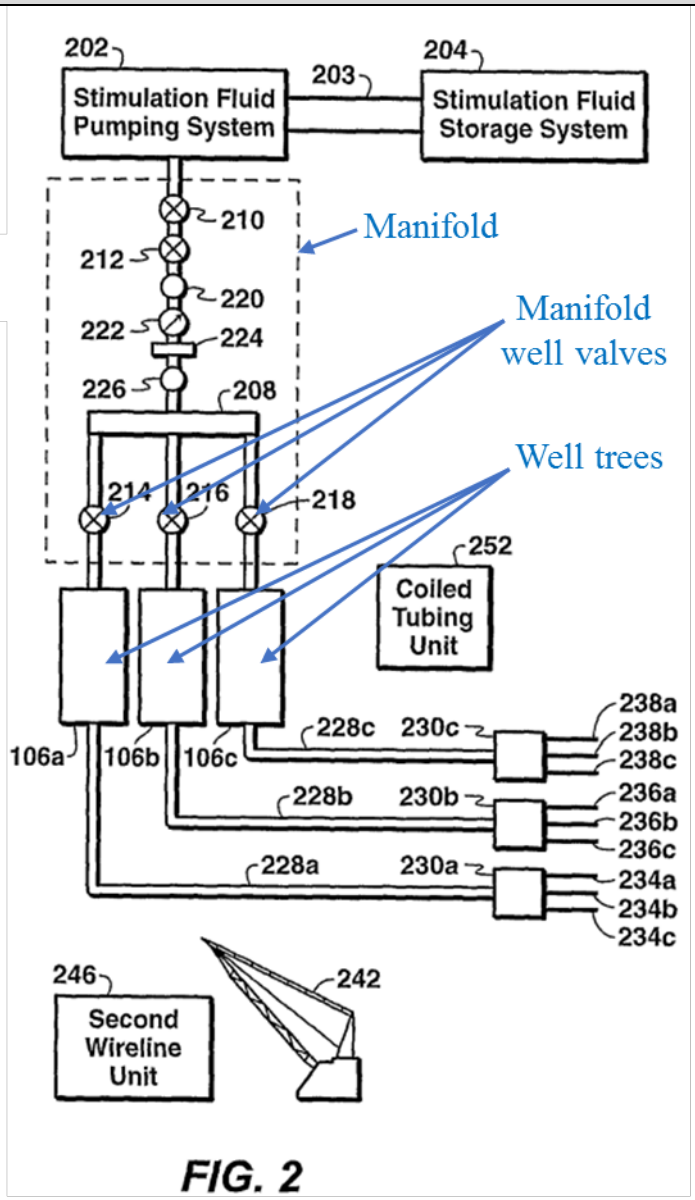 (annotated) . 6:50-65. A first manifold well valve 214 and a tree valve (not shown) installed on the first well's tree 106a may be opened to inject fluid into the first well. 6:19-33.
[27.2]-"a second valve via which fluid is adapted to be communicated	The "manifold contains multiple valves to enable stimulation fluid to be pumped into any selected well," including a second manifold well valve 216 that may be set to an open position to allow fluid injected into the second well 106b:

Claim	Tolman[10]
to a second well; and"	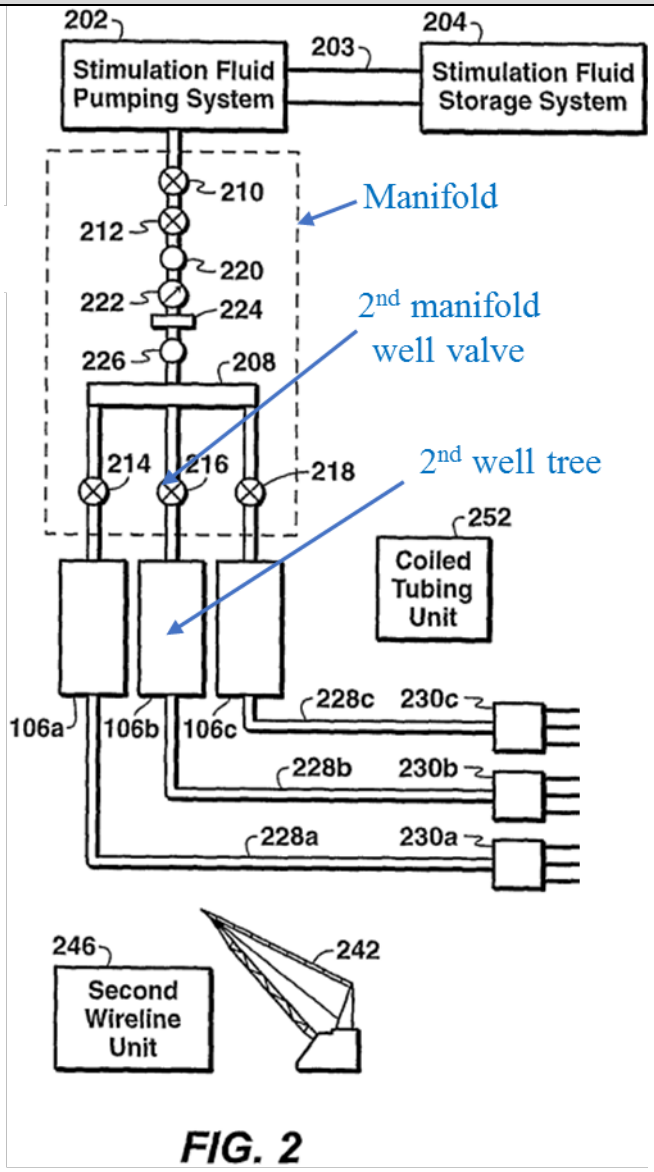 (annotated) 4:8-10; 7:21-25.
[27.3]-"one or more controllers, configured to:"	*Tolman* discloses "it may be beneficial to have automated devices, such as processor-based devices, which are utilized for…stimulation operations." 14:3-5. For example, systems "may be automated and controlled by a processor-based device, such as a computer system," which may have well "treatment schedules…pre-programmed into the computer system." 14:6-12. "The computer system…may include mechanisms to adjust the valves…between the open and

Claim	Tolman[10]
	closed positions[] and communicate with the various gauges" in a multi-well system. 14:13-16, 20-21. A POSITA would understand *Tolman*'s processor-based computer system used to control the multi-well system to be a "controller." Ex. 1002, ¶ 667.
[1.2]/[14.3]-"in response to determining that the fluid communicated via the manifold has satisfied one or more conditions:" **[27.6]**-"in response to: determining that the fluid communicated via the manifold has satisfied one or more conditions."	*Tolman* discloses "various operations may be performed on [multiple] wells…in a concurrent or substantially simultaneous manner to reduce…time associated with stimulating wells." 7:53-55. For example, in Figure 3, the manifold is "adjusted to prepare a specific well to receive…stimulation treatment," e.g., by moving the well's valves to "the open position" (8:52-59): 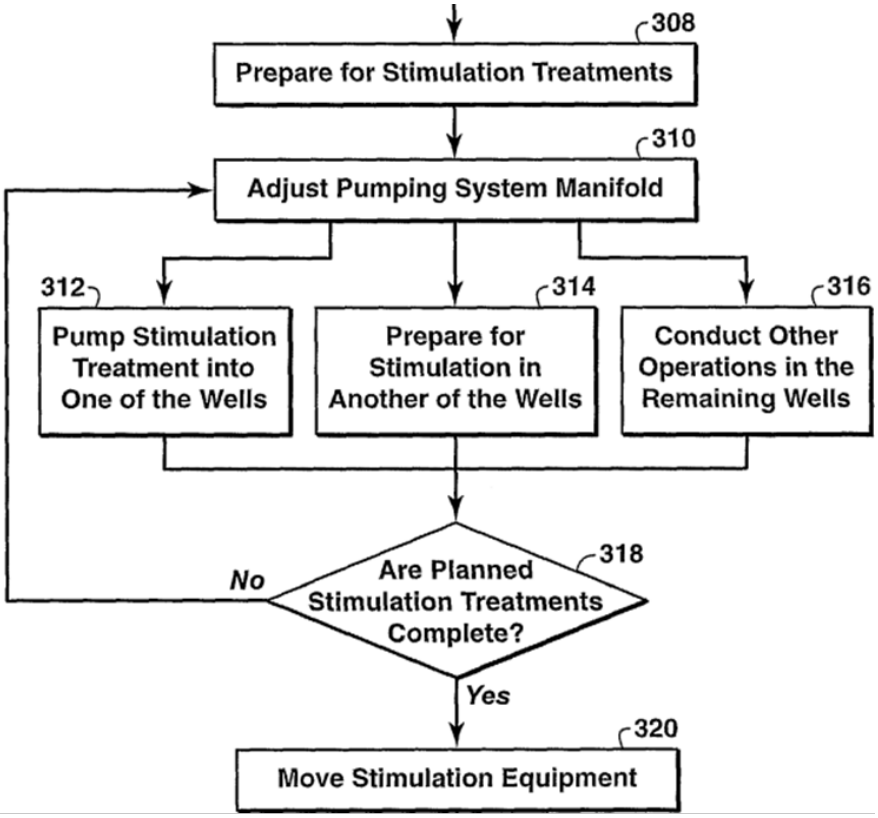 Annotated FIG. 3 While the stimulation treatment is pumped into the well

Claim	Tolman[10]
	(block 312), "another well may be prepared for stimulation treatments" (block 314), and "other operations may be conducted in the remaining wells" (block 316), such as "injecting fluids." 8:64-9:6. "By preparing another well concurrently with the stimulation of a first well, the other well may be ready for…stimulation" to "reduce 'non-pumping' time between the first stimulation treatment of the first well and a second stimulation treatment of another well." 9:8-15. After pumping stimulation fluid into a first well, "a determination is made whether the planned stimulation treatments…are completed." 9:17-19. A POSITA would have understood that determining if a stimulation treatment is complete would necessarily include determining a fluid condition of the treatment fluid to the well. Ex. 1002, ¶¶ 546-549, 631, 670. "If the planned stimulation treatments for the wells are not complete, then the…manifold…may be adjusted to prepare for the next well. That is, the valves…are positioned in the appropriate open or closed positions to enable stimulation fluid injection into another of the wells, which is to receive the second stimulation treatment." 9:17-26.
[1.3]/[14.4]-"opening a second valve; communicating fluid to a second well via the second valve; and" **[27.4]-**"open the second valve to thereby communicate	*Tolman* discloses preparing a second well while pumping stimulation fluid down the first well, so the second well is ready for fracturing when fracturing is completed in the first well. 9:9-11; 10:41-45. After fracturing the first well, fluid is "flowed back" through the first well's tree to a flowback system. 6:23-26; 11:8-10. During first well flowback, the second well's valves are opened and stimulation fluid is pumped down the second well to fracture the second well. 11:15-30. *Tolman* discloses well tree valves are closed during isolation and open during stimulation. 7:27-33. A POSITA would understand that a well tree valve would also need to be open

Claim	Tolman[10]
fluid to the second well via the second valve; and"	while fluid is being flowed back to allow fluid into/out of the well. Ex. 1002, ¶¶ 554, 631, 669. Thus, during flowback from the first well, while a first well tree valve is open, a second well valve is opened to allow stimulation fluid to be pumped into the second well. 11:15-30. *Tolman* discloses when a main manifold valve 210 and a second manifold well valve 214 are open "to create a second well flow path," "stimulation fluid [may be] pumped down the [second] well" to fracture the second well: 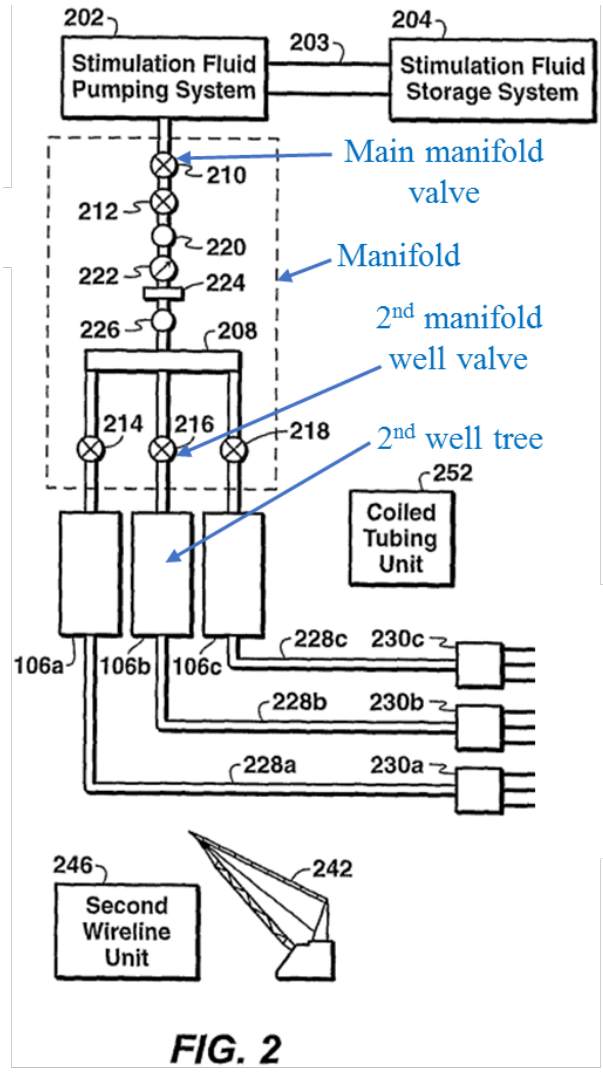 FIG. 2 (annotated) 11:15-30.

Claim	Tolman[10]
	Additionally, *Tolman* discloses using two or more of the systems of Figure 2 at a site, each system having a pumping system and manifold configured to treat different groups of wells. 15:55-65. Such configuration allows wells from the different groups to "be stimulated concurrently or simultaneously," which would include opening a valve to one well before closing a valve to another well. 15:65-66. Because the Claims do not require "the second valve" to be associated with the same manifold as "the first valve," this disclosure of *Tolman* also meets the Claim limitations.
[1.4]/[14.5]- "closing the first valve after opening the second valve." **[27.5]**-"close the first valve after opening the second valve,"	When fracturing operations are completed in the second well and fluids are flowed back through the second well, the first well is shut-in. 11:63-67, 46-49. A POSITA would understand that "shutting in" the first well necessarily includes closing first well's valves. Ex. 1002, ¶¶ 559, 631, 669.

As shown, *Tolman* discloses or suggests every limitation of Claims 1, 14, and 27 as arranged in the claims.

Claims 1, 14, and 27 do not recite any particular fluid condition to be satisfied to conduct the claimed valve sequencing and could include merely determining if there is/isn't fluid flow to a well. *'770*, 13:45-54. Regardless, *Tolman* also discloses valve sequencing that is conducted upon determining a condition of fluid to a first well. In *Tolman*, after stimulation fluid is determined to be delivered to a first well and fluid flowback is directed through the first well's tree to a flowback system,

second valves to a second well are opened to pump stimulation fluid to the second well. *Tolman*, 11:15-30. Subsequently, after flowback operations in the first well is complete, and after the second well's valve were opened, the first well is shut-in, which requires closing the first well's valves. *Id*., 11:48-49; Ex. 1002, ¶ 559.

In addition to making a determination if a planned stimulation is complete, *Tolman* discloses if "operations on the first well involve high pressure pumping… manipulating the manifold well valves and wellhead tree valves should not be concurrently performed." *Tolman*, 13:36-40. Accordingly, a POSITA would have found it obvious to determine if high pressure fluid was flowing to the first well prior to operating well valves. Ex. 1002, ¶ 549. A POSITA would have also found it obvious to determine the fluid's condition(s) using flow measurement devices (e.g., flow meters), which Tolman discloses as being associated with the wells' valves. Ex. 1002, ¶ 546; *Tolman*, 2:59-62, 7:10-14.

Further, *Tolman* discloses that during stimulation of a first well (where the first well's valves are open and stimulation fluid is pumped down the first well), preparation operations on the second well may include "injecting fluids." 8:63-65; 9:2-6. A POSITA would have found it obvious, if not necessary, to open the second well's valve to "inject[] fluids" into the second well. Ex. 1002, ¶ 557. Thus, *Tolman* also discloses or suggests a valve sequencing including opening the first well's valves to allow stimulation fluid pumped down the first well; then opening a second

well's valve during the first well's stimulation to allow fluid injected into the second well; and then closing the first well's valve after its stimulation. *Tolman*, 8:63-9:6; 11:15-21.

Tolman anticipates and/or renders obvious Claims 1, 14, and 27. Ex. 1002, ¶¶ 540-561, 627-632, 661-671.

2. CLAIMS 2, 15, 28

Tolman discloses a manifold "may be coupled to any number of wells with the appropriate valves, flow measurements devices, flow control devices." *Tolman*, 8:50-52. *Tolman* discloses that the "process of sequentially manipulating" valves to multiple wells "and pumping stimulation treatments in the wells, while simultaneously performing operations to prepare other wells for further stimulation treatments may be repeated." *Id*., 9:33-37. *Tolman* also discloses using the methods for "simultaneous or concurrent operations involving stimulation of two or more wells" in multi-well systems, where in an example, a multi-well system includes nine wells. *Id*., 5:43-44, 6:2-5. A POSITA would have found it obvious to "repeat[]" the "process of sequentially manipulating" valves to the third and fourth wells in the nine-well system to achieve the predictable results of applying Tolman's methods for simultaneous or concurrent operations to the first through fourth wells in the nine-well system. Ex. 1002, ¶ 563-565, 568-569. Further, such operations may be

"controlled by a processor-based device, such as a computer system," as taught by *Tolman*. *Tolman*, 14:6-12.

Tolman therefore anticipates and/or renders Claims 2, 15, and 28 obvious. Ex. 1002, ¶ 562-576, 633-636, 672-678.

3. CLAIMS 3, 16, 29

Tolman discloses methods for "simultaneous or concurrent operations involving stimulation of two or more wells" include repeating a "process of sequentially manipulating" valves to multiple wells "and pumping stimulation treatments in the wells, while simultaneously performing operations to prepare other wells for further stimulation treatments." *Id.*, 6:2-5, 9:33-37. *Tolman*'s operations may be "controlled by a processor-based device" (controller). *Id*, 14:6-12. Applying *Tolman*'s sequential valve sequencing to first-fourth wells' valves would have included closing a first valve and/or a third valve to associated well(s) after opening second and fourth valves to associated second and fourth wells with the predictable results of performing concurrent pumping and preparation operations to selected wells in the multi-well system. Ex. 1002, ¶ 579. Further, a POSITA would have found it obvious to perform such valve sequencing in *Tolman*'s methods of "sequentially manipulating" valves for simultaneous and concurrent operations in first-fourth wells to "reduc[e] and/or eliminat[e] the non-productive time and

resource utilization for…stimulating[] and completing [the] wells." *Id.*, ¶ 581-581; *Tolman*, 3:55-65, 4:8-15.

Therefore, *Tolman* anticipates and/or renders Claims 3, 16, and 29 obvious. Ex. 1002, ¶ 577-586, 637-639, 679-681.

4. CLAIMS 4, 17, 30

Tolman discloses an example stimulation treatment includes pumping fluid in multiple stages into a selected well "at an average rate of 20 barrels/minute." *Tolman*, 10:6-23. After pumping fluid into a selected well, "a determination is made whether the planned stimulation treatments…are completed." *Id.*, 9:17-19, Figure 3. A POSITA would have found it obvious, if not necessary, that determining whether a stimulation treatment is complete includes determining the flowrate to the selected well has stopped. Ex. 1002, ¶ 588. And, *Tolman*'s flow meters could obviously make such a determination. *Id.*; *Tolman*, 2:59-62.

Tolman thus anticipates and/or renders Claims 4, 17, and 30 obvious. Ex. 1002, ¶ 587-589, 640-641, 682-683.

5. CLAIMS 5, 9, 18, 22, 31

Tolman discloses a stimulation treatment includes pumping fluid into a selected well "at an average rate of 20 barrels/minute," and after pumping, "a determination is made whether the planned stimulation treatments…are completed." *Id.*, 9:17-19, 10:6-23, Figure 3. A POSITA would have found it obvious, if not

necessary, that determining whether a stimulation treatment is complete includes determining the flowrate to the selected well is below the average rate for stimulation, e.g., the flowrate has stopped/is zero. Ex. 1002, ¶ __.

Tolman anticipates and/or renders Claims 5, 9, 18, 22, and 31 obvious. Ex. 1002, ¶ 590-592, 604-605, 642-643, 650-651, 684-685.

6. CLAIMS 6, 19, AND 32

In *Tolman*'s example stimulation treatment of pumping fluid into a selected well "at an average rate of 20 barrels/minute," "a determination [that] the planned stimulation treatments…are completed" would necessarily and obviously include determining the flowrate to the selected well is below the average rate for the stimulation, *e.g.*, the flowrate has stopped/is zero. *Tolman*, 9:17-19, 10:6-23, Figure 3; Ex. 1002, ¶ 594. Conversely, when the flowrate is within a range for the "average rate" of the stimulation treatment or when the flowrate is above "an upper threshold" for the average rate of the stimulation treatment, *i.e.*, when the stimulation treatment is not complete, the flowrate conditions are not met. *Id.*, ¶ 595.

Further, it is standard practice for any flow system that if a measured flowrate is outside a flow target range, then a flowrate condition is not met. *Id.*.

Tolman therefore anticipates and/or renders claims 6, 19, and 32 obvious. Ex. 1002, ¶ 593-596, 644-645, 686-687.

7. CLAIMS 7, 20

In *Tolman*'s methods and systems, fluid is pumped through a manifold 206 to multiple wells 106a-106c:

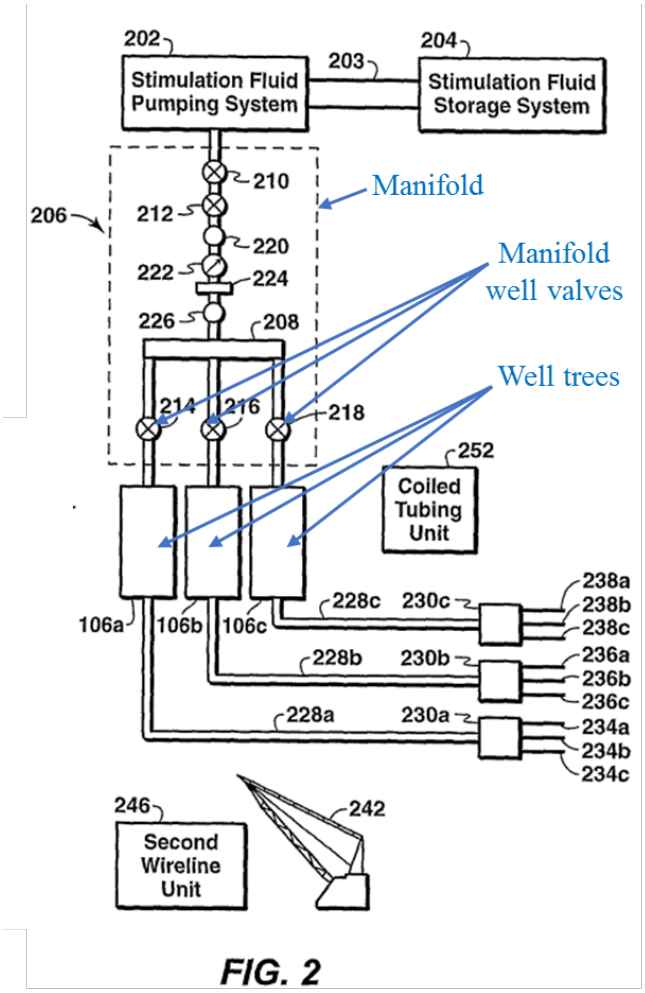

(annotated)

Tolman, Abstract, Figure 2. Further, such operations may be "controlled by a processor-based device, such as a computer system," as taught by *Tolman*. *Id.*, 14:6-12.

Therefore, *Tolman* anticipates and/or renders obvious Claims 7 and 20. Ex. 1002, ¶ 597-601, 646-647.

8. CLAIMS 8, 21

Claims 8(1) and 21(14) merely recite that the conditional determining limitation in the corresponding independent claims has occurred. Further, as discussed with Claim 14, "processor-based device[s], such as a computer system," may execute Tolman's methods, including "adjust[ing] the valves…between the open and closed positions[] and communicat[ing] with the various gauges" in the multi-well system. *Tolman*, 14:6-16, 20-21. Therefore, for the same reasons as with the Independent Claims 1 and 14, *Tolman* anticipates and/or renders obvious Claims 8 and 21. Ex. 1002, ¶ 602-603, 648-649.

9. CLAIMS 10, 13, 23, 26, 35, 38

Tolman discloses stimulation treatments that includes hydraulic fracturing pumping stimulation fluid (*i.e.*, hydraulic fracturing fluid) through a manifold 206 to selected wells, including a first well 106a and a second well 106b, by sequentially manipulating valves to the wells to perform the concurrent and simultaneous operations to the wells. *Tolman*, Abstract, 9:33-38, Figure 2. The fluids are injected "into a formation at high pressures and rates…to hold the fracture(s) open." *Id.*, 15:25-31.

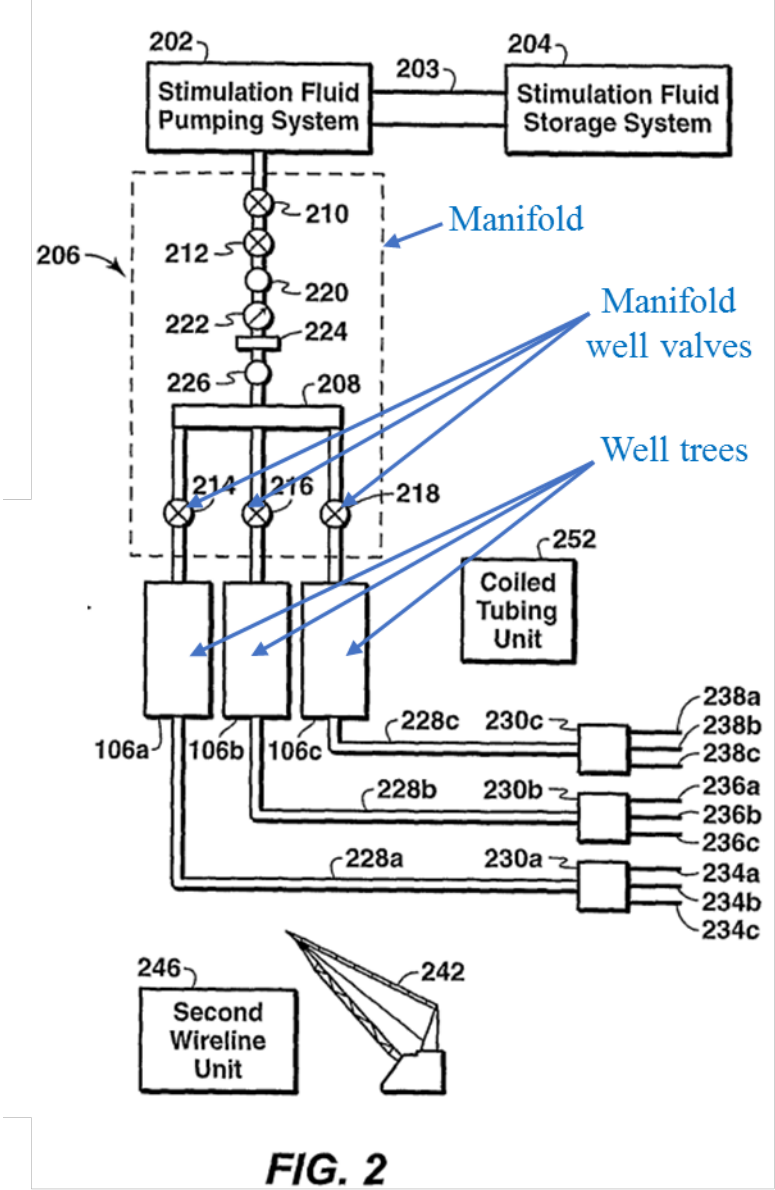

(annotated)

Tolman anticipates and/or renders obvious Claims 10, 13, 23, 26, 35, and 38. Ex. 1002, ¶ 606-608, 625-626, 652-653, 659-660, 700-701, 707-708.

10. CLAIMS 11, 24, 36

Claims 11, 24, and 36 merely label the first/second valves as "zipper" valves without imparting any distinguishable functionality or structure over the independent claims.

Additionally, as discussed in Section X.A.10., '770's specification does not distinguish "zipper valves" from any other valve capable of allowing fluid flow into a well (*e.g.*, a gate valve).

Tolman's valves are capable of controlling fluid flow into individual wells by opening/closing the valves and may be part of the manifold directing flow to the wells. *Tolman*, 4:8-12. For example, the valves "may be any type of valve, including those routinely used in oil-field applications, such as gate valves." *Id.*, 6:65-67. Accordingly, *Tolman* discloses "zipper valves" for the same reasons *Tolman* discloses the claimed first and second valves.

Thus, *Tolman* anticipates and renders obvious Claims 11, 24, and 36. Ex. 1002, ¶ 609-617, 654-655, 702-703.

11. CLAIMS 12, 25, 37

Tolman discloses that after a stimulation treatment is performed on a first well, and while the first well "is being flowed back," the second well is stimulated, which includes opening the second manifold well valve 216 and pumping stimulation fluid

down the second well to fracture the second well. *Tolman*, 10:41-42, 11:4-9, 15-30, Figure 2.

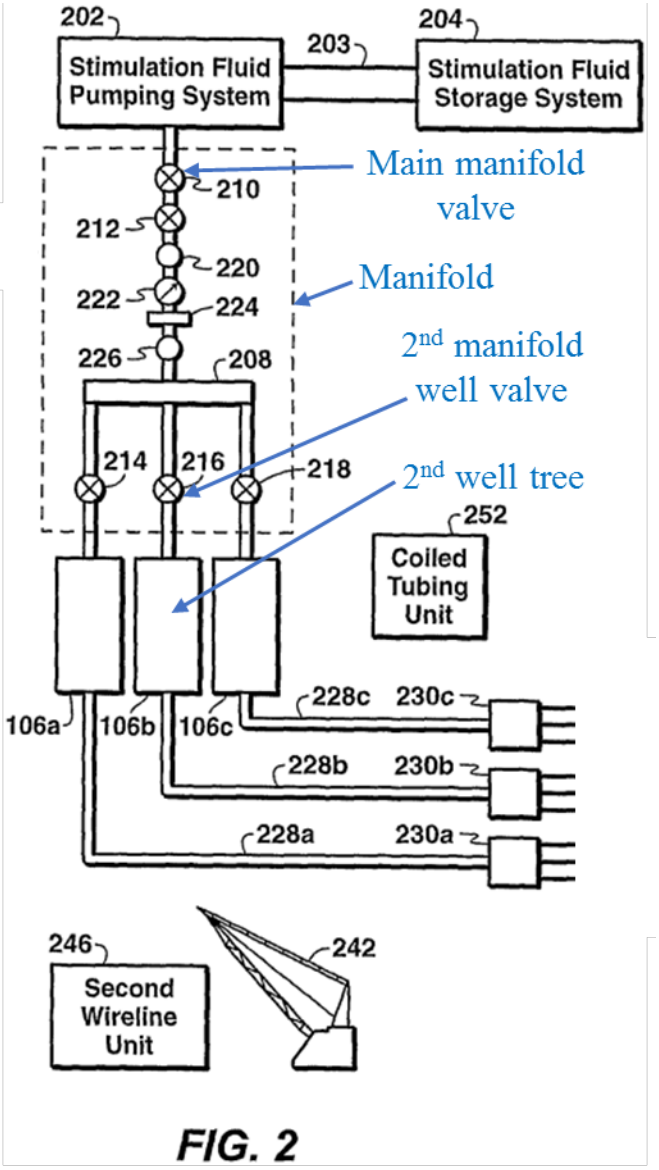

(annotated)

Tolman therefore anticipates and/or renders obvious Claims 12, 25, and 37. Ex. 1002, ¶ 618-622, 656-658, 704-706.

12. CLAIM 33

Claim 33(27) superfluously recites the manifold recited in Claim 27 and is thus disclosed by *Tolman* for the same reasons discussed in Section X.E.1.

Tolman thus anticipates and/or renders obvious Claim 33. Ex. 1002, ¶ 688-690.

13. CLAIM 34

Tolman discloses a pumping system pumps fluid through a manifold 206 to multiple wells 106a-106c:

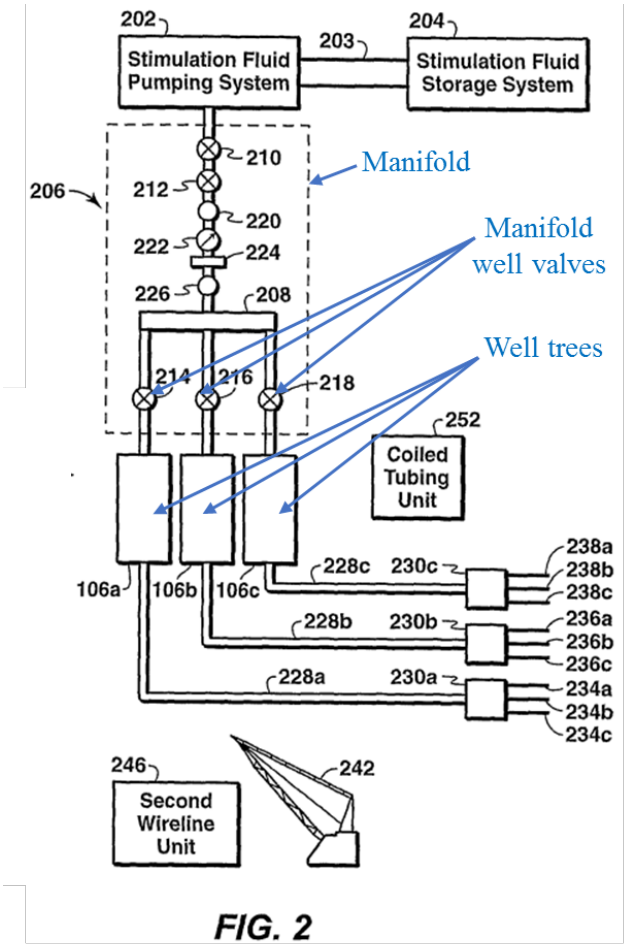

(annotated)

Tolman, Abstract, Figure 2.

Tolman discloses the "pumping system 202 may be automated and controlled by a processor-based device" (controller), "such as a computer system." *Id*., 14:6-12; Ex. 1002, ¶ 696.

Tolman therefore also anticipates and/or renders obvious Claim 34. Ex. 1002, ¶¶ 691-699.

XI. SECONDARY CONSIDERATIONS

There are none. *Id.*, ¶ 709.

XII. THE OFFICE HAS NOT PREVIOUSLY CONSIDERED THESE GROUNDS

The Office has not considered any ground in this Petition. Denial of institution under 35 U.S.C. § 325(d) is unwarranted.

XIII. CONCLUSION

All Claims are unpatentable.

Dated: December 15, 2023

Respectfully submitted,

/*Tammy J. Terry*/
Tammy J. Terry (Reg. No. 69,167)
Peter C. Schechter (Reg. No. 31,662)
Lisa E. Margonis (Reg. No. 57,123)
Califf T. Cooper (*Pro Hac Vice* to be requested)
OSHA BERGMAN WATANABE & BURTON LLP
1100 Louisiana St., Suite 4900
Houston, Texas 77002
Tel. | Fax. 713.228.8600 | 713.228.8778
Email: OBWB-IWS-Downing@obwbip.com

Counsel for Petitioner Intelligent Wellhead Systems, Inc.

CERTIFICATE OF COMPLIANCE

The undersigned hereby certifies that the foregoing Petition contains 13,999 words, excluding those portions identified in 37 C.F.R. § 42.24(a), as measured by the word-processing system used to prepare this Petition.

Dated: December 15, 2023

By: */Tammy J. Terry/*

Tammy J. Terry (Reg. No. 69,167)
OSHA BERGMAN WATANABE & BURTON LLP
1100 Louisiana St., Suite 4900
Houston, Texas 77002
Tel. | Fax. 713.228.8600 | 713.228.8778
Email: OBWB-IWS-Downing@obwbip.com

Counsel for Petitioner Intelligent Wellhead Systems, Inc.

CERTIFICATE OF SERVICE

Pursuant to 37 C.F.R. §§ 42.6(e) and 42.105(a), the undersigned hereby certifies that on December 15, 2023, a true and correct copy of the foregoing **Petition for *Inter Partes* Review of U.S. Patent No. 11,560,770** and copies of all supporting materials and exhibits was served by Federal Express on the following correspondence address of record as listed on USPTO's Patent Center (formerly PAIR):

Zachary A. Halbur
HAYNES AND BOONE, LLP
2323 Victory Avenue, Suite 700
Dallas, Texas 75219

Pursuant to 37 C.F.R. § 42.105(a), the undersigned hereby certifies that on December 1, 2023, a true and correct copy of the foregoing **Petition for *Inter Partes* Review of U.S. Patent No. 11,560,770** and copies of all supporting exhibits was served by Federal Express on the Patent Owner at the following address known to the Petitioner as likely to effect service:

Lee F. Johnston
HAYNES AND BOONE, LLP
675 15th St., Suite 2200
Denver, Colorado 80202

John R. Emerson
Tiffany M. Cooke
HAYNES AND BOONE, LLP
2323 Victory Avenue, Suite 700
Dallas, Texas 75219

Dated: December 15, 2023

Respectfully submitted,

/Tammy J. Terry/

Tammy J. Terry (Reg. No. 69,167)
OSHA BERGMAN WATANABE & BURTON LLP
1100 Louisiana St., Suite 4900
Houston, Texas 77002
Tel. | Fax. 713.228.8600 | 713.228.8778
Email: OBWB-IWS-Downing@obwbip.com

Counsel for Petitioner Intelligent Wellhead Systems, Inc.