UNITED STATES PATENT AND TRADEMARK OFFICE

PATENT TRIAL AND APPEAL BOARD

Intelligent Wellhead Systems

Petitioner

v.

Downing Wellhead Equipment, LLC

Patent Owner

Case No. IPR2024-00300
Patent No. 11,560,770

DECLARATION OF DR. ROBERT DURHAM

TABLE OF CONTENTS

INTRODUCTION 1

I. EXPERIENCE AND QUALIFICATIONS.....1

II. TASK SUMMARY AND MATERIALS REVIEWED 6

III. LIST OF EXHIBITS.....6

IV. SUMMARY OF CONCLUSIONS AND GROUNDS FOR CHALLENGE 10

V. LEGAL STANDARDS 11

A. Level of Ordinary Skill in the Art 11

B. Legal Standard for Claim Construction 12

C. Anticipation 13

D. Obviousness.....14

E. Priority Date 17

F. Independent and Dependent Claim Analysis 19

VI. OVERVIEW OF THE CHALLENGED PATENT.....19

A. The Subject Matter of the Challenged Patent 19

B. The Challenged Claims of the ’770 Patent 20

C. Prosecution History of the ’770 Patent 27

D. Priority Date of the ’770 Patent.....28

E. Comparison of Asserted References to Prior Art Discussed During Prosecution.....31

VII. LEVEL OF ORDINARY SKILL IN THE ART.....32

VIII. CLAIM CONSTRUCTION 32

IX. TECHNOLOGY BACKGROUND AND STATE OF THE ART 33

A. Well Drilling, Completion, and Production 33

B. History of Hydraulic Fracturing 34

C. Types of Pumps – Fracturing Pump Chain 38

D. Simultaneous or Sequential Fracturing (Simulfrac or zipper frac).....41

E. Continuous Pumping Fracturing 50

F. Operation Parameters for Fracturing.....52

G. Testing 56

X. OVERVIEW OF THE PRIOR ART 63

A. Krupa 63

B. Carr 71

C. Beuterbaugh.....73

D. Tolman.....75

E. Jackson 78

XI. GROUNDs 1 & 2: Anticipated by and/or Obvious over *Krupa* 81

A. Independent Claim 1 81

B. Dependent Claim 2 90

C. Dependent Claim 3 98

D. Dependent Claim 4 101

E. Dependent Claim 5 105

F. Dependent Claim 6 106

G. Dependent Claim 7 108

H. Dependent Claim 8 110

I. Dependent Claim 9 111

J. Dependent Claim 10 112

K. Dependent Claim 11 114

L. Dependent Claim 12 119

M. Dependent Claim 13 123

N. Independent Claim 14 124

O. Dependent Claim 15 127

P. Dependent Claim 16 129

Q. Dependent Claim 17 130

R. Dependent Claim 18 131

S. Dependent Claim 19 131

T. Dependent Claim 20 132

U. Dependent Claim 21 133

V. Dependent Claim 22 134

W. Dependent Claim 23 135

X. Dependent Claim 24 135

Y. Dependent Claim 25 136

Z. Dependent Claim 26 137

AA. Independent Claim 27 137

BB. Dependent Claim 28 145

CC. Dependent Claim 29 152

DD. Dependent Claim 30 155

EE. Dependent Claim 31 156

FF. Dependent Claim 32 156

GG. Dependent Claim 33 157

HH. Dependent Claim 34 158

II. Dependent Claim 35 160

JJ. Dependent Claim 36 161

KK. Dependent Claim 37 162

LL. Dependent Claim 38 163

XII. GROUNDs 3 and 4: Anticipated by and/or Obvious over *Carr* 163

A. Independent Claim 1 164

B. Dependent Claim 2 173

C. Dependent Claim 3 179

D. Dependent Claim 4 183

E. Dependent Claim 5 184

F. Dependent Claim 6 186

G. Dependent Claim 7 187

H. Independent Claim 8 188

I. Dependent Claim 9 189

J. Dependent Claim 10 190

K. Dependent Claim 11 191

L. Dependent Claim 12 196

M. Dependent Claim 13 198

N. Independent Claim 14 199

O. Dependent Claim 15 203

P. Dependent Claim 16 205

Q. Dependent Claim 17 206

R. Dependent Claim 18 207

S. Dependent Claim 19 207

T. Dependent Claim 20 208

U. Dependent Claim 21 209

V. Dependent Claim 22 210

W. Dependent Claim 23 211

X. Dependent Claim 24 212

Y. Dependent Claim 25 212

Z. Dependent Claim 26 213

AA. Independent Claim 27 214

BB. Dependent Claim 28 222

CC. Dependent Claim 29 225

DD. Dependent Claim 30 226

EE. Dependent Claim 31 227

FF. Dependent Claim 32 228

GG. Dependent Claim 33 228

HH. Dependent Claim 34 229

II. Dependent Claim 35 230

JJ. Dependent Claim 36 231

KK. Dependent Claim 37 231

LL. Dependent Claim 38 232

XIII. Ground 5: Obvious over Carr in view of Beuterbaugh 233

A. Rationale and Motivation to Combine 233

B. Independent Claims 1, 14, 27.....237

C. Dependent Claims 2, 15 and 28 245

D. Dependent Claims 3, 16 and 29 247

XIV. Ground 6: Obvious over Carr in view of Beuterbaugh further in view of Jackson 250

A. Rationale and Motivation to Combine 250

B. Claims 5, 9, 18, 22 and 31.....252

C. Claims 6, 19 and 32.....254

XV. Grounds 7 and 8: Anticipated by and/or Obvious over Tolman 255

A. Independent Claim 1 256

B. Dependent Claim 2.....270

C. Dependent Claim 3.....277

D. Dependent Claim 4.....281

E. Dependent Claim 5.....282

F. Dependent Claim 6.....284

G. Dependent Claim 7.....285

H. Independent Claim 8 287

I. Dependent Claim 9.....288

J. Dependent Claim 10.....289

K. Dependent Claim 11.....290

L. Dependent Claim 12.....295

M. Dependent Claim 13 298

N. Independent Claim 14 299

O. Dependent Claim 15 301

P. Dependent Claim 16 302

Q. Dependent Claim 17 303

R. Dependent Claim 18 304

S. Dependent Claim 19 304

T. Dependent Claim 20 305

U. Dependent Claim 21 306

V. Dependent Claim 22 307

W. Dependent Claim 23 307

X. Dependent Claim 24 308

Y. Dependent Claim 25 309

Z. Dependent Claim 26 309

AA. Independent Claim 27 310

BB. Dependent Claim 28 314

CC. Dependent Claim 29 316

DD. Dependent Claim 30 317

EE. Dependent Claim 31 317

FF. Dependent Claim 32 318

GG. Dependent Claim 33 319

HH. Dependent Claim 34 321

II. Dependent Claim 35 326

JJ. Dependent Claim 36 326

KK. Dependent Claim 37 327

LL. Dependent Claim 38 328

XVI. SECONDARY CONSIDERATIONS 328

XVII. CONCLUSION 329

INTRODUCTION

1. My name is Dr. Robert A. Durham. I make this declaration based upon my own personal knowledge and, if called upon to testify, would testify competently to the matters contained herein.

2. I have been asked to provide technical assistance in the inter partes review of U.S. Patent No. 11,401,779, which I may abbreviate as "the '770 Patent" or refer to as the "Challenged Patent." This declaration is a statement of my opinions on issues related to the unpatentability of claims of the '770 Patent. I am being compensated at my normal rate of $305 per hour for my analysis, plus reimbursement for expenses. My compensation does not depend on the content of my opinions or the outcome of this proceeding.

I. EXPERIENCE AND QUALIFICATIONS

3. In formulating my opinions, I have relied upon my knowledge, training, and experience in the relevant art. My qualifications are stated more fully in my curriculum vitae, which has been provided as Appendix A. My CV also lists publications on which I am a named author and identifies parties on behalf of whom I have previously provided expert testimony within the past four years. Here, I provide a brief summary of my qualifications.

4. I am a consulting engineer with experience in a number of technical areas. I have expertise in the electrification of the oil and gas industry from drilling

and completion to downstream. I have been working with oil field production companies, refining and chemical plants and equipment manufacturers and technology development companies, as a consultant, for nearly twenty years. My work relates to the subject matter of the Challenged Patent, which I describe below in Section VI ("Overview of the Challenged Patent").

5. I received my Bachelor of Science in Electrical Engineering and Master of Engineering and Technology Management degrees, from the University of Tulsa in 1992 and 1997, respectively. After years of professional work and research I received my Ph.D. in Engineering Management from Kennedy Western University in 2004.

6. I have also served in positions of leadership in the Petroleum and Chemical Industry Committee (PCIC) of the Institute of Electrical and Electronics Engineers (IEEE) for nearly twenty years. IEEE is the world's largest technical professional association. The PCIC is the premier forum for the exchange of electrical applications technology related to the petroleum and chemical industry. From 2005 – 2012, I served as secretary, then vice chair and then ultimately chair of the Production Subcommittee of the PCIC. The Production Subcommittee is the primary method for PCIC members to communicate technical papers related to drilling, well head and facilities operations of oil and gas wells. In 2013, I was appointed as Vice-Chair of the Standards Subcommittee of the PCIC, a role which

transitioned to Chair in 2014. I served as Chair until 2022. The Standards subcommittee of the PCIC is the Sponsor of IEEE standards relating to electrification and electrical equipment operations in the Oil and Gas Industry. The PCIC Standards Subcommittees sponsors nearly 50 electrical and oil and gas related standards. In September 2022, I was elected as an Executive Officer of the PCIC. I will serve as an Executive Officer for a total of eight years, serving two-year terms in each of the following positions: Secretary; Vice Chair; Chair; and Chair of Advisory and Awards.

7. My peers have recognized my contributions, particularly in the area of electrical equipment in the oil and gas industry. Because of this recognition, in 2019 I was elevated to the grade of Fellow of the IEEE for "contributions to submersible electrical equipment analysis and multi-point ground methods in hazardous petroleum and chemical environments." The IEEE Fellow grade is limited to the top 0.1% of the membership of IEEE worldwide.

8. I have worked directly in the area of electrification of oil and gas fields both as an employee and as a consulting engineer. From 2000 until the end of 2002, I was employed as Manager of Electric Infrastructure for New Dominion, LLC (NDL). In that capacity I administratively owned and was responsible for all electrical equipment including overhead power lines, transformers, switchgear, drives and motors throughout NDL's production, exploration and drilling areas.

9. After a brief stint as Vice President for EDG Power Group, responsible for Engineering and Project Management of generation and co-generation facilities across the U.S., I transitioned to the role of consulting engineer. In that role I have served as consulting engineer relating to the design, construction, analysis of all kinds of power systems, especially those in the oil and gas industry. This has included not only design and selection of equipment but also analysis of failures of equipment in the oil and gas field from drilling / completion sites to production facilities, midstream and downstream (refinery) locations.

10. In addition, I am a principal of PEDOCS, Inc., an oil and gas production company operating over 50 oil and gas production wells in Oklahoma. As such, I am well versed with operations of oil and gas wells including well stimulation, completion, hydraulic fracturing and production.

11. I have been familiar with oil and gas drilling, fracturing (fracking)[1] and completion operations for nearly twenty years. In addition to being responsible for interfacing with drilling and fracturing operations with regards to electrical needs as an employee of New Dominion, LLC, I have been further educated about drilling, fracturing and operations as I have consulted and investigated incidents on multiple well drilling, fracturing and completion pad sites over my engineering consulting engagements.

[1] "Frac*" and "frack*" are used interchangeably in the industry and herein.

12. I have been familiar with Occupational Safety and Health Administration ("OSHA") and its responsibilities at oil and gas locations. I have consulted and investigated incidents on multiple oil and gas sites where OSHA has also performed investigations with regard to injuries and fatalities that have occurred at oil and gas locations, including drilling, fracturing and completion operations. As Principal Scientist of THEWAY Labs, part of my responsibilities include overseeing the Health Safety and Environmental (HSE) program at THEWAY Labs, including establishing policies and procedures commensurate with OSHA requirements at all locations, including requirement for oil and gas sites.

13. I am the author or co-author of over fifty published papers and five books. A list of publications that I have authored over the last thirty years is included in my professional CV, which is attached as Appendix A.

14. Therefore, based on my education, professional experience of 30 years, and scholarly books and publications, I am an expert in the relevant field of the Challenged Patent at issue here and have been an expert in this field since before the Challenged Patent was filed with the United States Patent and Trademark Office ("USPTO"). I am familiar with how a person having ordinary skill in the art would have understood and used the terminology found in the '770 Patent at the time of its filing.

II. TASK SUMMARY AND MATERIALS REVIEWED

15. I have been asked to review the Challenged Patent and its prosecution history, to provide an understanding of the technology relevant to the Challenged Patent, to review certain prior-art references, and analyze whether or not those references disclose or teach limitations of claims from the Challenged Patent. The opinions stated in this declaration are from the perspective of a person of ordinary skill in the art (POSITA).

III. LIST OF EXHIBITS

16. In forming my opinions, I have reviewed the Challenged Patent, its prosecution history and references cited by the Examiner, the materials cited in the List of Exhibits, and the materials cited throughout my declaration.

Ex.	Description
1001	U.S. Patent No. 11,560,770 by Jordan Kuehn *et al.* entitled "Hydraulic Fracturing Plan and Execution of Same" (the "'770 Patent")
1002	Declaration of Dr. Robert Durham
1003	U.S. Patent Publication 2022/0268141 A1 by Andrew Krupa *et al.* entitled "System and Method for an Automated and Intelligent Frac Pumping" ("Krupa")
1004	U.S. Patent Publication 2019/0233275 A1 by Jared Micheal Carr *et al.* entitled "Method and Apparatus for Metering Flow during Centralized Well Treatment" ("Carr")

1005	PCT International Patent Application Publication WO2020/145978 A1 by Beuterbaugh *et al.* entitled "Simulfrac Pulsed Treatment" ("*Beuterbaugh*")
1006	U.S. Patent 8,490,685 B2 by Randy Tolman *et al.* entitled "Method and Apparatus Associated with Stimulation Treatments for Wells" ("*Tolman*")
1007	U.S. Patent Publication 2007/0023184 A1 by Robert Jackson *et al.* entitled "Well Product Recovery Process" ("Jackson")
1008	First Amended Complaint for Patent Infringement, Permanent Injunctive Relief Requested and Demand for Jury Trial, (ECF No. 29); *Downing Wellhead Equipment, LLC v. Intelligent Wellhead Systems, Inc., et al*., No. 1:23-cv-01180 (D. Colo.) ("the Litigation")
1009	Jacobs, Trent. "The Shale Evolution: Zipper Fracture Takes Hold," J Pet Technol 66 (2014): 60–67. doi: https://doi.org/10.2118/1014-0060-JPT
1010	'770 Prosecution History
1011	Patent Family Priority Diagram
1012	Patent Family Specification Comparisons
1013	'779 Prosecution History
1014	Downing's Objections and Responses to IWS's First Set of Interrogatories in the Litigation
1015	Michael Morton, "Unlocking the Earth: A Short History of Hydraulic Fracturing," GEO ExPro, Vol. 10, No. 6, December 2013 (https://geoexpro.com/unlocking-the-earth-a-short-history-of-hydraulic-fracturing/) (last accessed November 30, 2023)
1016	B.A. Wells and K.L. Wells. "Shooters – A "Fracking" History." American Oil & Gas Historical Society, (https://aoghs.org/technology/hydraulic-fracturing) (last accessed November 30, 2023)

1017	Carl T. Montgomery and Michael B. Smith, "Hydraulic Fracturing: History of an Enduring Technology," *Journal of Petroleum Technology*, Vol. 62, Issue 12 (Dec. 2010).
1018	Bourgoyne, A. T., Jr., K. K. Millheim, M. E. Chenevert and F. S. Young, Jr. (1986). Applied Drilling Engineering, Society of Petroleum Engineers.
1019	Vassiliou, M. S. (2018), Historical dictionary of the petroleum industry, Rowman & Littlefield
1020	U.S. Patent Application Publication No. 2013/0306322 to Sanborn *et al.* entitled "System and Process for Extracting Oil and Gas by Hydraulic Fracturing" ("*Sanborn*")
1021	U.S. Patent Publication No. 2012/0255734 to Coli *et al.* ("*Coli*") entitled "Mobile, Modular, Electrically Powered System for Use in Fracturing Underground Formations"
1022	Waters, George, Dean, Barry, Downie, Robert, Kerrihard, Ken, Austbo, Lance, and Bruce McPherson. "Simultaneous Hydraulic Fracturing of Adjacent Horizontal Wells in the Woodford Shale." Paper presented at the SPE Hydraulic Fracturing Technology Conference, The Woodlands, Texas, January 2009. doi: https://doi.org/10.2118/119635-MS ("*Waters*")
1023	Pearson, C.M., Bond, A.J., Eck, M.E., and J.H. Schmidt. "Results of Stress-Oriented and Aligned Perforating in Fracturing Deviated Wells." J Pet Technol 44 (1992): 10–18. doi: https://doi.org/10.2118/22836-PA
1024	Mutalik, P N, and Bob Gibson. "Case History of Sequential and Simultaneous Fracturing of the Barnett Shale in Parker County." Paper presented at the SPE Annual Technical Conference and Exhibition, Denver, Colorado, USA, September 2008. doi: https://doi.org/10.2118/116124-MS ("*Mutalik*")
1025	Mayerhofer, M. J., Lolon, E. P., Warpinski, N. R., Cipolla, C. L., Walser, D., and C. M. Rightmire. "What is Stimulated Reservoir

	Volume (SRV)?" Paper presented at the SPE Shale Gas Production Conference, Fort Worth, Texas, USA, November 2008. doi: https://doi.org/10.2118/119890-MS ("*Mayerhofer*")
1026	Roussel, Nicolas P., and Mukul M. Sharma. "Optimizing Fracture Spacing and Sequencing in Horizontal-Well Fracturing." SPE Prod & Oper 26 (2011): 173–184. doi: https://doi.org/10.2118/127986-PA ("*Roussell*")
1027	K. R. Webster, W. C. Goins, Jr., and S. C. Berry, "A Continuous Multistage Tracing Technique," *Journal of Petroleum Technology,* vol. 17, no. 06, pp. 619-625, 1965, doi: 10.2118/977-pa. ("*Webster*")
1028	A. Casero, G. Pace, B. Malone, F. Cantaloube, L. Tealdi, H. Malonga, and R. Seale, "Continuous Pumping, Multistage, Hydraulic Fracturing in Kitina Field, Offshore Congo, West Africa," in *SPE International Symposium and Exhibition on Formation Damage Control*, 2008, vol. All Days, SPE-112442-MS, doi: 10.2118/112442-ms. [Online]. Available: https://doi.org/10.2118/112442-MS ("*Casero*").
1029	S. Rassenfoss, "A Look Into What Fractures Really Look Like," *Journal of Petroleum Technology,* vol. 70, no. 11, pp. 28-36, 2018, doi: 10.2118/1118-0028-jpt. at 6 ("*Rassenfoss*").
1030	R. Oberhofer, "Application of Ball-Drop Technology to Improve Efficiency and Stimulation of Limited Entry Completion Systems," in *Abu Dhabi International Petroleum Exhibition & Conference*, 2016, vol. Day 2 Tue, November 08, 2016, D021S052R004, doi: 10.2118/183427-ms. [Online]. Available: https://doi.org/10.2118/183427-MS ("*Oberhofer*").
1031	Tolman, R. C., et al. (2009). Method and Apparatus for Simultaneous Stimulation of Multi-Well Pads. SPE Hydraulic Fracturing Technology Conference ("*Tolman Article*").
1032	G. R. Holzhausen and R. P. Gooch, "Impedance of Hydraulic Fractures: Its Measurement and Use for Estimating Fracture Closure Pressure and Dimensions," in *SPE/DOE Low Permeability Gas Reservoirs Symposium*, 1985, vol. All Days, SPE-13892-MS, doi:

	10.2118/13892-ms. [Online]. Available: https://doi.org/10.2118/13892-MS ("*Holzhausen*").
1033	R. W. Paige, L. R. Murray, and J. D. M. Roberts, "Field Application of Hydraulic Impedance Testing for Fracture Measurement," *SPE Production & Facilities,* vol. 10, no. 01, pp. 7-12, 1995, doi: 10.2118/26525-pa ("*Paige*").
1034	L. V. Massaras, A. Dragomir, and D. Chiriac, "Enhanced Fracture Entry Friction Analysis of the Rate Step-Down Test," in *SPE Hydraulic Fracturing Technology Conference*, 2007, vol. All Days, SPE-106058-MS, doi: 10.2118/106058-ms. [Online]. Available: https://doi.org/10.2118/106058-MS ("*Massaras*").
1035	S. Mondal, "Pressure transients in wellbores: Water hammer effects and implications for fracture diagnostics," 2010 ("*Mondal*").

17. Other than prosecution histories, Exs. 1010 ('770 Prosecution History) and 1013 ('779 Prosecution History), all citations to exhibits reference original page numbers found in the underlying document, and all emphases are added.

IV. SUMMARY OF CONCLUSIONS AND GROUNDS FOR CHALLENGE

18. After reviewing the materials identified in the List of Exhibits, I have concluded that each of the Challenged Claims of the '770 Patent would have been anticipated and/or obvious to a person of ordinary skill in the art, based on the following grounds. I explain and show below why each of the Challenged Claims are unpatentable in the detailed discussion of Grounds 1-6. I've considered each of the claims as a whole, but have addressed each subpart separately for ease of discussion.

Ground	'770 Claims	Basis for Challenge
1	1-38	Anticipated by Krupa
2	1-38	Obvious over Krupa
3	1-38	Anticipated by Carr
4	1-38	Obvious over Carr
5	1-3, 14-16, 27-29	Obvious over Carr in view of Beuterbaugh
6	5, 6, 9, 18, 19, 22, 31, 32	Obvious over Carr in view of Beuterbaugh, further in view of Jackson
7	1-38	Anticipated by Tolman
8	1-38	Obvious over Tolman

V. LEGAL STANDARDS

A. LEVEL OF ORDINARY SKILL IN THE ART

19. When interpreting a patent, I understand that it is important to identify the relevant art pertaining to the patent-in-suit as well as the level of ordinary skill in that art at the time of the claimed invention. The "art" is the field of technology to which the patent is related.

20. I have been instructed by counsel that the person of ordinary skill in the art (**"POSITA"**) is a hypothetical person who is presumed to know the relevant prior art. I understand that the actual inventor's skill is not determinative of the level of ordinary skill. I further understand that the factors that may be considered in determining the level of skill include: the types of problems encountered in the art; prior art solutions to those problems; rapidity with which innovations are made; sophistication of the technology; and educational level of active workers in the field. I understand that not all such factors may be present in every case, and one or more of them may predominate.

B. LEGAL STANDARD FOR CLAIM CONSTRUCTION

21. I understand that the first step in determining whether a patent claim would have been anticipated or obvious is to ascertain how a POSITA would have understood the claim terms.

22. I have been instructed by counsel on the law regarding claim construction and patent claims, and I understand that a patent may include two types of claims: independent claims and dependent claims. An independent claim stands alone and includes only the limitations it recites. A dependent claim can depend from an independent claim, or it can further depend from another dependent claim. I understand that a dependent claim includes all the limitations that it recites, in addition to all the limitations recited in the claim(s) from which it depends.

23. It is my understanding that in proceedings before the USPTO, the claims of a patent are to be construed under what is referred to as the "*Phillips* standard." I understand that this means that claim terms of a patent are given the meaning the terms would have to a POSITA, in view of the description provided in the patent itself and the patent's file history.

24. I understand that to determine how a person of ordinary skill would have understood a claim term, one should look to those sources available that show what a person of skill in the art would have understood the disputed claim language to mean. I understand that, in construing a claim term, one looks primarily to the

intrinsic patent evidence, including the words of the claims themselves, the remainder of the patent, and the patent's prosecution history. I understand that extrinsic evidence, which is evidence external to the patent and the prosecution history, may also be useful in interpreting patent claims when the intrinsic evidence itself is insufficient.

25. I understand that words or terms should be given their ordinary and accepted meaning unless it appears that the inventors were using them to mean something else. In making this determination, the claims, the remainder of the patent, and the prosecution history are of paramount importance. Additionally, the patent and its prosecution history must be consulted to confirm whether the patentee has acted as its own lexicographer (i.e., provided its own special meaning to any disputed terms), or intentionally disclaimed, disavowed, or surrendered any claim scope.

26. In comparing the claims of the Challenged Patent to the prior art, I have considered the Challenged Patent and its file history in light of the understanding of a person of skill at the time of the alleged invention.

C. ANTICIPATION

27. It is my understanding that the claims of a patent are anticipated by a prior art reference if each and every element of the claim is found either explicitly or inherently in a single prior art reference or system. I understand that inherency

requires a showing that the missing descriptive matter in the claim is necessarily or implicitly present in the allegedly anticipating reference, and that it would have been so recognized by a POSITA. In addition, I understand that an enabling disclosure is a disclosure that allows a POSITA to make the invention without undue experimentation. Although anticipation typically involves the analysis of a single prior art reference, I understand that additional references may be used to show that the primary reference has enabling disclosure, to explain the meaning of a term used in the primary reference, and/or to show that a characteristic is inherent in the primary reference.

D. OBVIOUSNESS

28. I understand that the prior art may render a patent claim "obvious." I understand that two or more prior art references (e.g., prior art articles, patents, or publications) that each disclose fewer than all elements of a patent claim may nevertheless be combined to render a patent claim obvious if the combination of the prior art collectively discloses all elements of the claim and one of ordinary skill in the art at the time would have been motivated to combine the prior art in such a way. I understand that this motivation to combine need not be explicit in any of the prior art but may be inferred from the knowledge of one of ordinary skill in the art at the time the patent was filed. I also understand that one of ordinary skill in the art is not an automaton but is a person having ordinary creativity. I further understand that one

or more prior art references, articles, patents or publications that disclose fewer than all of the elements of a patent claim may render a patent claim obvious if including the missing element would have been obvious to one of skill in the art (e.g., the missing element represents only an insubstantial difference over the prior art or a reconfiguration of a known system).

29. I understand that under the doctrine of obviousness, a claim may be invalid if the differences between the invention and the prior art are such that the subject matter as a whole would have been obvious at the time the invention was made to a POSITA to which the subject matter pertains.

30. To assess obviousness, I understand that I am to consider the scope and content of the prior art, the differences between the prior art and the claim, the level of ordinary skill in the art, and any secondary considerations to the extent they exist.

31. I understand that any evidence of secondary indicia of non-obviousness should be considered when evaluating whether a claimed invention would have been obvious to one of ordinary skill at the time of invention. These secondary indicia of non-obviousness may include, for example:

- a long felt but unmet need in the prior art that was satisfied by the claimed invention;
- commercial success of processes claimed by the patent;
- unexpected results achieved by the invention;
- praise of the invention by others skilled in the art;

- the taking of licenses under the patent by others; and
- deliberate copying of the invention.

32. I understand that there must be a nexus between any such secondary indicia and the claimed invention.

33. It is also my understanding that there are additional considerations that may be used as further guidance as to when the above factors will result in a finding that a claim is obvious, including the following:

- the claimed subject matter is simply a combination of prior art elements according to known methods to yield predictable results;
- the claimed subject matter is a simple substitution of one known element for another to obtain predictable results;
- the claimed subject matter uses known techniques to improve similar devices or methods in the same way;
- the claimed subject matter applies a known technique to a known device or method that is ready for improvement to yield predictable results;
- the claimed subject matter would have been "obvious to try" choosing from a finite number of identified, predictable solutions, with a reasonable expectation of success;
- there is known work in one field of endeavor that may prompt variations of it for use in either the same field or a different one based on design incentives or other market forces if the variations would have been predictable to a POSITA;
- there existed at the time of the invention a known problem for which there was an obvious solution encompassed by the patent's claims; and

- there is some teaching, suggestion, or motivation in the prior art that would have led a POSITA to modify the prior art reference or to combine prior art reference teachings to arrive at the claimed subject matter.

34. Finally, I understand that a claim may be deemed invalid for obviousness in light of a single prior art reference, without the need to combine references, if the elements of the claim that are not found in the reference can be supplied by the knowledge or common sense of one of ordinary skill in the relevant art.

E. PRIORITY DATE

35. I understand that, subject to the next paragraph, the asserted "priority date" of a patent is the earlier of: (a) the date on which a patent application is filed; or (b) the date on which an earlier-filed patent application is filed if the patentee claims the benefit of priority to that earlier-filed patent application.

36. I understand that it is not enough for a patent to merely claim the benefit of an earlier-filed application, but that additional criteria must be met. In particular, the prior application itself must describe the claimed invention, and must do so in sufficient detail that one skilled in the art can clearly conclude that the inventor invented the claimed invention as of the filing date sought. First, I understand that a priority-date analysis is on a claim-by-claim basis. Second, I understand that, in order for a patent claim to be entitled to the filing date of an earlier patent application, a "Section 112 analysis" must be conducted. I am informed that a "Section 112" analysis encompasses looking to the earlier patent application, and ascertaining

whether that earlier patent application meets both the written-description and enablement requirements as of the filing date of the earlier application. I understand that it is not enough that the claim would have been obvious from the earlier application, but that the earlier application itself must describe the claimed invention.

37. I understand that in order to satisfy the written description requirement the earlier application must reasonably convey to those skilled in the art that the inventors had possession of the subject matter of the patent as of the filing date of the earlier application. I have been informed that it is the disclosures of the earlier patent application that count, and that while the meaning of terms, phrases, or diagrams in the earlier patent application must be interpreted from the vantage point of one skilled in the art, all of the claimed limitations must appear in the specification. Further, I understand that this analysis is not a question of whether one skilled in the art might be able to construct the claimed invention from the teachings of the disclosure or whether a claimed invention is an obvious variant of that which is disclosed in the specification; rather, I understand that an earlier application must itself describe each of the claim limitations.

38. I also understand that in order to satisfy the enablement requirement, the earlier application must enable a person of ordinary skill in the art to practice the claimed invention without undue experimentation.

F. INDEPENDENT AND DEPENDENT CLAIM ANALYSIS

39. I understand that an independent claim does not refer to any preceding claim. The ’770 Patent includes numerous dependent claims that refer to the independent claims. Further, I understand that each dependent claim depends from an independent claim or from another dependent claim. I understand that, as a result, each dependent claim incorporates all of the elements of the claim(s) that it refers to. Therefore, in my analysis of the dependent claims, my analysis of the claim(s) from which they depend is also incorporated.

VI. OVERVIEW OF THE CHALLENGED PATENT

40. I have reviewed U.S. Patent No. 11,560,770 (“the ‘770 Patent”), which is entitled “Hydraulic Fracturing Plan and Execution of Same” (Ex. 1001). I have also reviewed the prosecution history of the ’770 Patent (Ex. 1010). I understand that the patent was filed on August 1, 2022, and that it issued on January 24, 2023. The ’770 Patent claims priority to several other documents, but as I discuss below in the “Priority Date of the ’770 Patent” section, those earlier documents do not provide support for all claim limitations of the ’770 Patent.

A. THE SUBJECT MATTER OF THE CHALLENGED PATENT

41. The ’770 Patent generally relates communicating fluid to a first well via a first valve and a manifold and a sequence of opening/closing valves in response to determining “one or more conditions” of the fluid has been satisfied. Although

the specification describes hydraulic fracturing operations of subterranean formations, at least the independent claims are not limited to hydraulic fracturing operations. The '770 Patent includes a section entitled "Background" that describes the Patent application as relating "generally to oil and gas hydraulic fracturing applications".[2] The '770 Patent does not describe the Prior Art or State of the Art of Fracturing Systems at the time of the application, nor does it describe how the claimed embodiments improve upon the Prior Art.

B. THE CHALLENGED CLAIMS OF THE '770 PATENT

42. The Challenged Claims of the '770 Patent, which are Claims 1-38, are set forth below. Some of the claim elements have been further sub-divided (and labeled as part "1.1", "1.2" or similar, where the first number indicates the claim number, and the following decimals refer to sub parts of that claim) for ease of reference.

Claim Limitation	Claim Language from '770 Patent
1.1	1. A method, comprising: communicating fluid to a first well via a manifold and a first valve, the first valve being associated with both the manifold and the first well; and
1.2	in response to determining that the fluid communicated via the manifold has satisfied one or more conditions:

[2] Ex. 1001 2:10-14.

Claim Limitation	Claim Language from ’770 Patent
1.3	opening a second valve; communicating fluid to a second well via the second valve; and
1.4	closing the first valve after opening the second valve.
2.1	2. The method of claim 1, further comprising: communicating fluid to a third well via the manifold and a third valve, the third valve being associated with both the manifold and the third well; and
2.2	in response to determining that the fluid communicated via the manifold has satisfied the one or more conditions:
2.3	opening a fourth valve;
2.4	communicating fluid to a fourth well via the fourth valve; and
2.5	closing the third valve after opening the fourth valve.
3.1	3. The method of claim 2, wherein: the first valve is closed after opening both the second valve and the fourth valve; and/or
3.2	the third valve is closed after opening both the second valve and the fourth valve.
4	4. The method of claim 1, wherein the one or more conditions include one or more flow rate conditions.
5	5. The method of claim 4, wherein the fluid communicated via the manifold has satisfied the one or more flow rate conditions when a flow rate of the fluid is below an upper threshold, above a lower threshold, or both.
6	6. The method of claim 4, wherein the fluid communicated via the manifold has not satisfied the one or more flow rate conditions when a flow rate of the fluid is above an upper threshold or below a lower threshold.

Claim Limitation	Claim Language from ’770 Patent
7	**7**. The method of claim 1, further comprising: pumping the fluid into the manifold.
8	8. The method of claim 1, further comprising: determining that the fluid communicated via the manifold has satisfied the one or more conditions.
9	9. The method of claim 8, wherein determining that the fluid communicated via the manifold has satisfied the one or more flow rate conditions comprises determining that a flow rate of the fluid is below an upper threshold, above a lower threshold, or both.
10	10. The method of claim 1, wherein the fluid communicated via the manifold is hydraulic fracturing fluid.
11	11. The method of claim 1, wherein: the first valve is a first zipper valve; and/or the second valve is a second zipper valve.
12.1	12. The method of claim 1, wherein the second valve is associated with both the manifold and the second well; and
12.2	wherein communicating fluid to the second well via the second valve comprises communicating fluid to the second well via the manifold and the second valve.
13	13. The method of claim 12, wherein the fluid communicated via the manifold is hydraulic fracturing fluid.
14.1	14. An apparatus, comprising: a non-transitory computer readable medium; and a plurality of instructions stored on the non-transitory computer readable medium and executable by one or more processors, wherein, when the instructions are executed by the one or more processors, the following steps are executed:
14.2	communicating fluid to a first well via a manifold and a first valve, the first valve being associated with both the manifold and the first well; and

Claim Limitation	Claim Language from ’770 Patent
14.3	in response to determining that the fluid communicated via the manifold has satisfied one or more conditions:
14.4	opening a second valve; communicating fluid to a second well via the second valve; and
14.5	closing the first valve after opening the second valve.
15.1	15. The apparatus of claim 14, wherein, when the instructions are executed by the one or more processors, the following steps are also executed: communicating fluid to a third well via the manifold and a third valve, the third valve being associated with both the manifold and the third well; and
15.2	in response to determining that the fluid communicated via the manifold has satisfied the one or more conditions:
15.3	opening a fourth valve;
15.4	communicating fluid to a fourth well via the fourth valve; and
15.5	closing the third valve after opening the fourth valve.
16.1	16. The apparatus of claim 15, wherein: the first valve is closed after opening both the second valve and the fourth valve; and/or
16.2	the third valve is closed after opening both the second valve and the fourth valve.
17	17. The apparatus of claim 14, wherein the one or more conditions include one or more flow rate conditions.
18	18. The apparatus of claim 17, wherein the fluid communicated via the manifold has satisfied the one or more flow rate conditions when a flow rate of the fluid is below an upper threshold, above a lower threshold, or both.

Claim Limitation	Claim Language from ’770 Patent
19	19. The apparatus of claim 17, wherein the fluid communicated via the manifold has not satisfied the one or more flow rate conditions when a flow rate of the fluid is above an upper threshold or below a lower threshold.
20	20. The apparatus of claim 14, wherein, when the instructions are executed by the one or more processors, the following step is also executed: pumping the fluid into the manifold.
21	21. The apparatus of claim 14, wherein, when the instructions are executed by the one or more processors, the following step is also executed: determining that the fluid communicated via the manifold has satisfied the one or more conditions.
22	22. The apparatus of claim 21, wherein determining that the fluid communicated via the manifold has satisfied the one or more flow rate conditions comprises determining that a flow rate of the fluid is below an upper threshold, above a lower threshold, or both.
23	23. The apparatus of claim 14, wherein the fluid communicated via the manifold is hydraulic fracturing fluid.
24	24. The apparatus of claim 14, wherein: the first valve is a first zipper valve; and/or the second valve is a second zipper valve.
25.1	25. The apparatus of claim 14, wherein the second valve is associated with both the manifold and the second well; and
25.2	wherein communicating fluid to the second well via the second valve comprises communicating fluid to the second well via the manifold and the second valve.
26	26. The apparatus of claim 25, wherein the fluid communicated via the manifold is hydraulic fracturing fluid.
27.1	27. A system, comprising: a first valve via which fluid is communicated from a manifold to a first well;

Claim Limitation	Claim Language from ’770 Patent
27.2	a second valve via which fluid is adapted to be communicated to a second well; and
27.3	one or more controllers, configured to:
27.4	open the second valve to thereby communicate fluid to the second well via the second valve; and
27.5	close the first valve after opening the second valve,
27.6	in response to: determining that the fluid communicated via the manifold has satisfied one or more conditions.
28.1	28. The system of claim 27, further comprising: a third valve via which fluid is communicated from the manifold to a third well;
28.2	a fourth valve via which the fluid is adapted to be communicated to a fourth well; and
28.3	the one or more controllers, configured to: open the fourth valve to thereby communicate fluid to the fourth well via the fourth valve; and
28.4	close the third valve after opening the fourth valve,
28.5	in response to: determining that the fluid communicated via the manifold has satisfied the one or more conditions.
29.1	29. The system of claim 28, wherein the one or more controllers are further configured to: close the first valve after opening both the second valve and the fourth valve; and/or
29.2	close the third valve after opening both the second valve and the fourth valve.
30	30. The system of claim 27, wherein the one or more conditions include one or more flow rate conditions.

Claim Limitation	Claim Language from ’770 Patent
31	31. The system of claim 30, wherein the fluid communicated via the manifold has satisfied the one or more flow rate conditions when a flow rate of the fluid is below an upper threshold, above a lower threshold, or both.
32	32. The system of claim 30, wherein the fluid communicated via the manifold has not satisfied the one or more flow rate conditions when a flow rate of the fluid is above an upper threshold or below a lower threshold.
33	33. The system of claim 27, further comprising the manifold.
34.1	34. The system of claim 27, further comprising one or more pumps;
34.2	wherein the one or more controllers are further configured to cause the one or more pumps to pump the fluid into the manifold.
35	35. The system of claim 27, wherein the fluid communicated via the manifold is hydraulic fracturing fluid.
36	36. The system of claim 27, wherein: the first valve is a first zipper valve; and/or the second valve is a second zipper valve.
37.1	37. The system of claim 27, wherein the second valve is associated with both the manifold and the second well; and
37.2	wherein communicating fluid to the second well via the second valve comprises communicating fluid to the second well via the manifold and the second valve.
38	38. The system of claim 37, wherein the fluid communicated via the manifold is hydraulic fracturing fluid.

C. PROSECUTION HISTORY OF THE '770 PATENT

43. I have reviewed the prosecution history of the '770 Patent. In this section I summarize the prosecution history of the '770 Patent. The '770 Patent was filed as U.S. Application No. 17/878,493 ("the '493 Application") on August 1, 2022, as a continuation application of U.S. Application No. 17/388,716 ("the Parent Application" or "the '716 Application"). The Parent Application issued as U.S. Patent No. 11,401,779 ("the '779 Patent") after its claims were found allowable for including limitations "similar to" or directed to "determining that the flow rate of the fluid being pumped into the first well is below a flow rate threshold and has been below the flow rate threshold for a threshold amount of time."[3]

44. The '493 Application was filed with claims that were similar to the Parent Application claims such that the claims recite a sequence of opening/closing valves, but the '493 Application claims were much broader than the claims presented and/or allowed in the Parent Application. Notably omitted from the '493 Application Independent Claims were the allowable "flow rate thresholds" elements from the Parent Application. Additionally, the '493 Application claims are not limited to hydraulic fracturing, continuous pumping, method/apparatus/system that includes a common manifold, common flowlines, or a common fluid, or thresholds for determining or taking subsequent step. In addition to a broader set of new claims

[3] Ex. 1013, p. 100, 115.

being presented in the ’493 Application, a new Examiner was assigned to examine the claims under an “expedited” examination request.

45. In the only Office Action presented during prosecution of the ’493 Application, the Examiner rejected the claims on a ground of non-statutory double patenting as being “not patentably distinct” from the ’779 Patent.[4] In response, the Applicant filed a terminal disclaimer and added new claims 31-38, each of which depended from one of the indicated allowable independent claims. A Notice of Allowance was then issued. The Examiner stated that the claims were allowable because the prior art of record failed to disclose: “‘in response to determining that the fluid communicated via the manifold has satisfied one or more conditions: opening a second valve’ in combination with the other limitations,” or “close the first valve after opening the second valve, in response to determining that the fluid communicated via the manifold has satisfied one or more conditions” in combination with other limitations.”[5] The ’493 Application issued as the ’770 Patent on January 24, 2023.

D. PRIORITY DATE OF THE ’770 PATENT

46. I have reviewed the filing history of the ’770 Patent and related applications. For the ’770 Patent, the Application Data Sheet (ADS) filed along with

[4] Ex. 1010, p. 62.

[5] Ex. 1010, p. 19.

the ’493 Application indicated that the application was a continuation of the ’716 Application (filed July 29, 2021), claimed the benefit of U.S. Provisional Application No. 63/189,663 (“the ’663 Provisional”), which was filed May 17, 2021, and also indicated that the ’716 Application was a “continuation-in-part”[6] of U.S. Application No. 17/319,854 (“the ’854 Application”), which was filed May 13, 2021.[7] The ADS for the ’463 Application also indicated the ’463 Application claimed the benefit of a long family chain of the ’854 Application.

47. As discussed, the ’770 Patent claims the benefit of the ’663 Provisional”, which was filed May 17, 2021, and is a continuation of the ’716 Application which is a CIP of the ’854 Application,” which was filed May 13, 2021. The ’854 Application purports to claim priority to seven non-provisional applications, each being related through CIP filings. The ’854 Application and the seven parent non-provisional applications are collectively referred to as the “CIP parent applications.” The ’854 Application also claims priority to nine provisional applications, collectively referred to as the “parent provisional applications.”

---

[6] The ADS originally filed with the ’716 Application indicated the ’716 Application was a “continuation” of the ’854 Application. After prosecution of the ’716 Application closed on the merits, Patent Owner filed a corrected ADS to change the ’716 Application from a “continuation” application to a “continuation-in-part” (“CIP”) application and amended the specification to reflect the same.

[7] Ex. 1010, p. 82-85.

48. Except for some generic background language, the ’779 and ’770 Patents does not contain any copied portions of the CIP parent applications or the parent provisional applications. Instead, the specifications of the ’779 and ’770 Patents contain originally drafted descriptions of valve operations for a plurality of wells and fracturing systems and methods, including detailed descriptions of frac legs and associated valves and wells, and operations thereof.

49. The CIP parent applications and the parent provisional applications are not related to and do not disclose valve sequencing for multiple wells or valve sequencing in response to determining that the fluid communicated via the manifold has satisfied one or more conditions. Further, some of the CIP parent applications and parent provisional applications do not even disclose multiple well fracturing systems or operations, such as parent applications titled “Unibody valve and methods of using the valve” and “Method of operating a valve and extending an object through the valve and into a well,” which are instead directed to valve assemblies for passing objects into a well, and parent applications titled “Delivering and metering grease to process valves” and “Grease system for valves used in oil and gas operations,” which are directed to valve greasing systems.

50. I understand that to rely on a parent application’s filing date, the parent application must disclose each element of the claim to an extent where it is clear the inventor had possession of the claimed invention at the time of the parent

application. I have also been instructed that only subject matter which is actually or inherently disclosed in a parent application is entitled to the parent application's filing date. Subject matter that is obvious over the parent application's disclosure is not entitled to the parent application's filing date.

51. Because none of the CIP parent applications or the parent provisional applications disclose all the limitations in claims of the '770 Patent, the claims are not entitled to any of the claimed earlier filing dates of the CIP parent applications or the parent provisional applications. Therefore, the earliest priority date to which any claim of the '770 Patent is entitled is that of the '663 Provisional: May 17, 2021.

E. COMPARISON OF ASSERTED REFERENCES TO PRIOR ART DISCUSSED DURING PROSECUTION

52. I have been asked to analyze the technical references that I understand Petitioner is asserting as prior art (Krupa, Carr, Beuterbaugh, Tolman, and Jackson) and to compare them to the references cited by the USPTO Examiner during prosecution of the '770 Patent.

53. **Primary references:** I have relied upon Krupa, Carr, and Tolman as the base (or primary) references.

54. **Secondary references:** I have relied upon Beuterbaugh and Jackson as secondary references, along with the knowledge of a person of ordinary skill in the art, which are used in combination with the primary references.

55. None of the above references were considered during prosecution of the ’770 Patent. Accordingly, the prior art grounds discussed in this declaration are different from any prior art ground considered by the Examiner.

VII. LEVEL OF ORDINARY SKILL IN THE ART

56. A person of ordinary skill in the art would have a Bachelor of Science in Engineering as well as at least two years of academic or industry experience in the oil and gas industry, including well-related operations experience, such as well drilling, completion, or production. Additional education could offset experience and vice versa.

VIII. CLAIM CONSTRUCTION

57. In the sections below, I have sought to provide the ordinary and customary meaning of claim terms, using the principles I discuss above in the Legal Standards section.

58. I do not believe that any claim terms of the ’770 Patent need to be construed to assess whether the prior art reads on the challenged claims.[8]

[8] I reserve the right to raise or address claim construction of the claims of the ’770 Patent and other arguments in district court. For example, all challenges to the ’770 Patent are not raised in the petition, including, for example, validity under 35 U.S.C. 112, and controversies may arise during litigation that require resolution through claim construction not presented here because of the similarities between the prior art and the ’770 Patent.

IX. TECHNOLOGY BACKGROUND AND STATE OF THE ART

59. In the subsections below, I describe some of the basic principles of engineering that would be used, or at least considered for use, on a well site. While only certain dependent claims relate to hydraulic fracturing ("hydraulic fracturing fluid," and "zipper valve"), I also discuss the basic principles of engineering that would be used, or at least considered for use, on a hydraulic fracturing site. The principles discussed in the subsections below would have been well-known to a POSITA in the 2019-2021 timeframe, and long before.

A. WELL DRILLING, COMPLETION, AND PRODUCTION

60. Generally, well drilling is the process of drilling a hole into the earth to extract natural resources, such as water, oil, or gas, from the earth formation or to inject a fluid downhole to, *e.g.*, stimulate production of a fluid, monitor formations, or store fluids and/or waste. Well completion is the process of preparing a well for production (or injection) after drilling operations. Well completion may include running in production tubing strings, isolation of hydrocarbon producing zones, perforating the tubing, stimulating the well (such as by injecting hydraulic fracturing fluid), or other processes to help facilitate or enhance recovery/injection of fluids. During production, the hydrocarbon resource is sent to the surface and collected for sale.

61. Various surface equipment is used in the processes of drilling, completion, and production. For drilling, a drill bit is attached to a drill pipe. Blowout prevention equipment, which includes one or more valves that may be closed in case of a loss of control event, (along with other emergency equipment) is installed on the well. Mud pumps are configured to pump mud (drilling fluid) from a mud pit into the drill pipe. A derrick is positioned over the well to suspend the drill string and run it into the well.

62. During completion operations, flow lines and valves on the surface are connected to the well to facilitate and control fluid flow into the wells and/or tools run-in into the well. Pumps are connected to the flow lines to pump fluid through the lines and into the well.

63. During production operations, flow lines extending from the well move the produced fluid through a series of valves to direct the production to separators, tanks, and/or processing equipment.

B. HISTORY OF HYDRAULIC FRACTURING

64. Fracturing the hydrocarbon bearing formations is a technique that has been used to increase or speed up oil and gas production for nearly as long as oil and gas production has existed. Fracturing methods as early as the 1850's used

explosives such as gunpowder ignited by red-hot iron or nitroglycerin "torpedoes."[9] Hydraulic fracturing, in its modern form of pumping liquids and proppants (*e.g.*, sand) into the formation, began in the 1940s using a process developed by Stanolind Oil and used by Halliburton in the mid-continent region. Early hydraulic fracturing in the 1940s and 1950s used frac pumps, including pumps that could operate at around 1500 Hp.[10] On March 17, 1949, Stanolind and Haliburton performed the first commercial application of hydraulic fracturing at a location about 12 miles east of Duncan, Oklahoma.[11]

[9] Michael Morton, "Unlocking the Earth: A Short History of Hydraulic Fracturing," GEO ExPro, Vol. 10, No. 6, December 2013 (https://geoexpro.com/unlocking-the-earth-a-short-history-of-hydraulic-fracturing/) (last accessed July 17, 2023) (Ex. 1015).

[10] Carl T. Montgomery and Michael B. Smith, "Hydraulic Fracturing: History of an Enduring Technology," *Journal of Petroleum Technology* vol. 62 issue 12 p. 26 (Dec. 2010) (Ex. 1017).

65. The expansion of directional and horizontal drilling extended the use of hydraulic fracturing into previously underdeveloped "tight" formations, including shale.[12] In oil and gas exploration, directional drilling is a technique for accessing hydrocarbon bearing formations (oil and gas formations) that are not located immediately beneath the surface location, or to increase the amount of formation exposed to the wellbore. Some tool or process is used to cause the wellbore to deviate from the vertical to reach previously inaccessible formation locations, to expose more of the hydrocarbon bearing formation to the wellbore, or to drill several wells from a single surface location, such as an offshore platform or a land-based drilling pad. Like most developments in the oil and gas industry "the early drilling of directional wells was clearly motivated by economics."[13] It was the offshore fields of California that spawned the technology which led to modern directional and horizontal drilling. In the 1930s, directional drilling was being used in the Huntington Beach, California field to reach an offshore oil-bearing formation from a well initiated on an onshore pad.

66. Throughout the 1980s, directional drilling (a technique for accessing hydrocarbon bearing formations (oil and gas formations) that are not located immediately beneath the surface location, or to increase the amount of formation

exposed to the wellbore) increased. Techniques for drilling wells to intersect natural fractures were in particular on offshore pads and in the Austin Chalk trend of central Texas. The Austin Chalk is a soft, loosely cemented, easily pulverized limestone characterized by natural fractures oriented primarily vertically. Horizontally deviated wells were drilled into the chalk to intersect several of the natural fractures, allowing for transport of the hydrocarbons into the wellbore. This was combined with artificial fracturing to increase the flowrate of hydrocarbons into the wellbore.

67. Because more formation is exposed to be fractured, horizontal wells use much higher volumes of fracturing fluid and proppant than do vertical wells. This requires the use of more and bigger blending and pumping systems. As

discussed by *Sanborn*, pumping systems of 32,000 hp were typically used as early as 2012.[14] Other references, such as *Coli*, suggest systems of pumps as large as 2,500 hp each, with total system power as high as 40,000 hp were used in the same time period (four trailers, each with four 2500 hp pumps operating in parallel).[15] These pumps are typically triplex or quintuplex positive displacement (plunger) type pumps.[16] Although some fracturing systems have been converted to electric driven pump motors, the large majority of hydraulic pumping systems "are typically mobilized on skids or tractor-trailers and powered using diesel motors."[17] These diesel engines require large amounts of diesel fuel, along with the requisite extra safeguards to address potential safety concerns.[18]

C. TYPES OF PUMPS – FRACTURING PUMP CHAIN

68. The basics of hydraulic fracturing have not changed significantly since 1949 when Halliburton first commercialized the "hydrafrack" process. Hydraulic

---

[14] U.S. Patent Application Publication No. 2013/0306322 to Sanborn *et al.* entitled "System and Process for Extracting Oil and Gas by Hydraulic Fracturing" ("*Sanborn*") (Ex. 1020), [0005].

[15] U.S. Patent Publication No. 2012/0255734 to Coli *et al.* entitled "Mobile, Modular, Electrically Powered System for Use in Fracturing Underground Formations" ("*Coli*" (Ex. 1021)), [0049], FIG. 2.

[16] *Sanborn* (Ex. 1020), at [0005]; *Coli* (Ex. 1021), at [0011].

[17] *Coli* (Ex. 1021), at [0005]; *see also Id.,* [0007] ("standard fluid pumps require large volumes of diesel fuel and extensive equipment maintenance programs").

[18] *Sanborn* (Ex. 1020), at [0007].

fracturing still involves pumping water (or another liquid) blended with a proppant (*e.g.*, sand) and other chemicals into the downhole reservoir at a sufficient pressure to crack (fracture) the downhole rock. The sand-water mixture is then forced into the cracks, where the sand keeps the cracks (fractures) open to allow hydrocarbons, such as oil and natural gas, to flow out of the formation into the well bore. What has changed are the pressures and flowrate of the fracturing jobs, the sizes of equipment and the particular proppants, chemicals and liquids used.

69. A modern fracturing process requires multiple pumps, operating together as a system to provide fracturing fluid with the right composition, at the right flow rate, and at a pressure sufficient to fracture the formation. At the beginning of the pumping chain are the water transfer pumps. These pumps operate at a relatively low pressure to move water from the storage location (e.g., ponds, tanks) to the blender or the hydration unit. In the blender, ingredients such as a proppant, e.g., sand or resin-coated sand or ceramics, and other optional chemicals, e.g., acids, gels, friction reducers, biocides and the like are mixed with the water to form the fracturing slurry. Dry products, such as sand, are transported into the blender tub using conveyors or augers, while liquid products, such as acids, are typically transported into the blender tub using relatively small horsepower pumps operating at lower pressures, as the blender tub operates at, more or less, ambient pressures. Once the fracturing slurry is blended to the proper makeup and

consistency, it is transferred to the fracturing pumps using a blender discharge pump, which typically operates at a higher pressure than the water or chemical transfer pumps, e.g., in order to ensure flow to the large fracturing pumps requiring a higher suction (input) pressure.

70. A fracturing piston (or plunger) pump works in a similar manner to a car engine, without the step of igniting the fuel to provide energy to the shaft. In a piston (plunger) pump, the shaft is rotated by an external power source, such as an engine or electric motor. Pistons (plungers), typically 3-5, are arranged along the shaft and connected so that the rotational motion of the shaft is translated into linear motion of the pistons. As the shaft rotates, the piston (plunger) moves away from the head, creating suction which draws the slurry into the piston chamber. As the piston (plunger) then moves toward the head, pressure is created which drives the fluid out of the chamber and down the line to and into the wellbore. A key characteristic of these fracturing pumps is that the same amount of liquid is discharged from the pump with every stroke, largely independent of the pressure downstream of the pump. The result is that flow at a particular pump speed is relatively constant, while pressure changes as downstream conditions change. Accordingly, as fracturing begins, reducing downstream impedance of the fluid flow system, pressure tends to drop as flowrate stays relatively constant. Conversely, as downstream impedance increases, pressure rises with a relatively constant flowrate.

As a boundary condition, if a valve is closed downstream of a fracturing pump, flowrate through the pump will remain relatively constant while pressure rises. Pressure will continue to rise until some condition reduces the downstream impedance.

71. Because the pistons (plungers) are so large (~5" in diameter with ~8" stroke), a large amount of fluid must flow into the piston on each stroke. This tends to lower the suction pressure, as the void of the piston (plunger) must be filled by the incoming slurry. If the suction pressure gets too low, then cavitation occurs. Cavitation is the condition where bubbles form in the liquid because the vapor pressure of the liquid is higher than the suction pressure. When the bubbles collapse, such as when as the piston reaches the bottom of its stroke, then noise, vibration and damaging forces are created. In order to avoid cavitation, and the associated problems, the suction pressure must be maintained higher than the vapor pressure of the fluid (e.g., slurry), even during the intake phase of the piston.

D. SIMULTANEOUS OR SEQUENTIAL FRACTURING (SIMULFRAC OR ZIPPER FRAC)

72. For most of the history of hydraulic fracturing, fracturing technology advances have largely been geared towards advancements in chemicals (such as the development of corrosion inhibitors, gels and slickwater fracking), proppants and increasing flow and pressure of the fracturing operations. The goal, as always, was to create fractures that expose the hydrocarbon bearing formation to the wellbore,

allowing the hydrocarbons to flow into the wellbore. For most of its history, hydraulic fracturing has been performed one well at a time, potentially with several stages (zones) being fractured in a single well. With the increased popularity of horizontal drilling in the 1990s and 2000s, the number of fracturing stages in a well increased dramatically as the "pay zone" (the hydrocarbon bearing formation) in which the well exposed increased from tens to hundreds of feet to several thousand feet.

73. In the mid-2000s, operators began experimenting with, and then using a technique dubbed "zipper fracturing," in which multiple wells, closely spaced in the formation, and often drilled from the same pad, were fractured simultaneously, or sequentially. The result was that the fractures formed in one well were affected by the pressures and fractures in another well, leading to so called "zipper fractures" that were longer, multidirectional, and exposed more formation to the wellbores than single well fracturing produced.

74. The image below was captured from *Jacobs*[19] and shows the influence that simultaneous or sequencing fracturing has on the fractures caused by wells. For the fractures nearest the wellbores, the fractures show a typical pattern of being aligned with the perforations, as shown in the below figure where A1-A3 are

[19] Jacobs, Trent. "The Shale Evolution: Zipper Fracture Takes Hold," J Pet Technol 66 (2014): 60–67. doi: https://doi.org/10.2118/1014-0060-JPT (Ex. 1009).

perforations and associated fractures from a first horizontal wellbore and B1-B2 are the perforations/fractures from a second parallel wellbore. However, for those fractures that are near other wellbores, the fracture lengthens and turns, creating a zipper-like pattern to the fracture. This exposes more of the formation to the wellbore, and allows for earlier, and more complete, recovery of hydrocarbons from the formation.

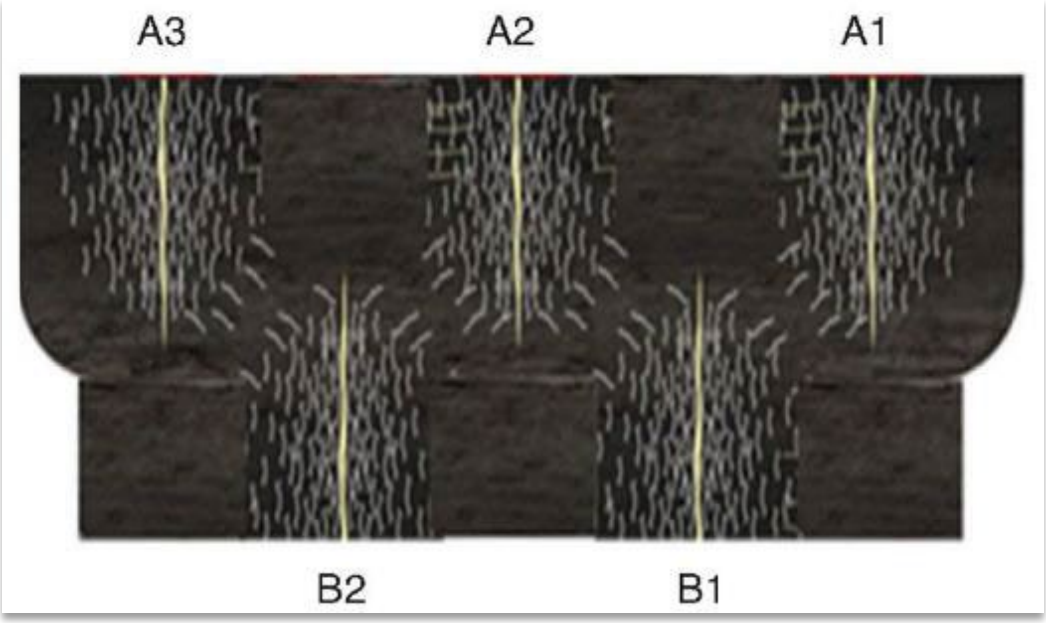

75. The figure below (with the wellbores represented vertically) from *Jacobs* shows various types of fracturing configurations beginning with conventional fracking (to the right) and ending with modified zipper fracturing (MZF) on the left. The changes in location of the perforation and fracturing operations are intended to increase the development of zipper fractures and expand the interface with the hydrocarbon-bearing formation.

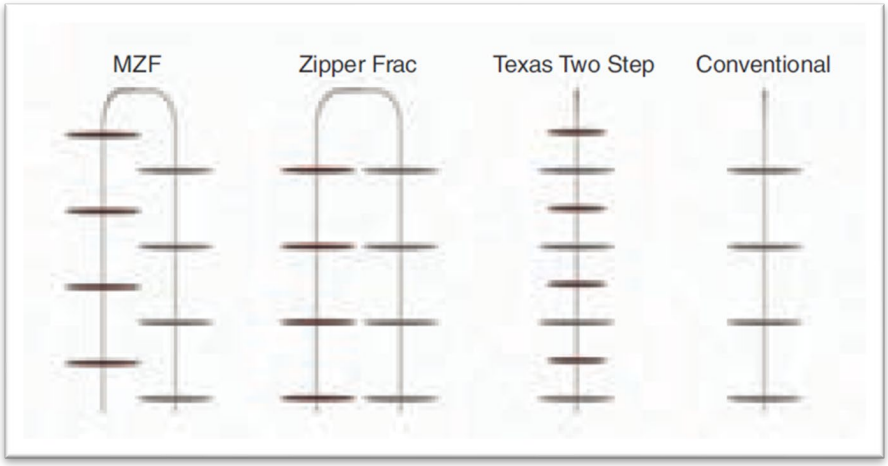

Waters at 5.

76. As described by *Waters*, the process for developing zipper fractures involves maintaining pressure in the formation from one wellbore, while initiating fractures by pressuring up a proximate wellbore. "In ultra-low permeability reservoirs such as shales, the stimulations do not necessarily have to occur concurrently. Since there is little to no fluid leak off into the rock matrix the fracture systems will remain pressurized until flown back. This pressurized system can provide the diversion [zipper fracture] desired when the adjacent lateral is stimulated subsequent to the initial stimulation."[20]

[20] Waters, George, Dean, Barry, Downie, Robert, Kerrihard, Ken, Austbo, Lance, and Bruce McPherson. "Simultaneous Hydraulic Fracturing of Adjacent Horizontal Wells in the Woodford Shale." Paper presented at the SPE Hydraulic Fracturing Technology Conference, The Woodlands, Texas, January 2009. doi: https://doi.org/10.2118/119635-MS (Ex. 1022), p. 8.

77. This allows for one well stage to be pressurized and shut in (such as with a plug or a ball seal), then an adjacent well stage pressurized and gaining the benefits of the stress induced from the other pressurized well. This has advantages not only to the development of fractures downhole but has operational advantages as well. As *Waters* states below, one fracturing crew and one perforating crew can treat multiple wells simultaneously or in an alternating arrangement allowing for faster completion of the fracturing process.[21]

- This "Zipper-Frac" method provides some significant operational efficiencies:
  - When two wells drilled from the same pad are being stimulated only one stimulation crew and perforating crew is required. While the fracturing crew is stimulating one well, the perforating crew is setting the frac plug and perforating the adjacent wellbore. The two crews continue to work back and forth between the two wells to efficiently complete them in a timely manner.
  - If more than two wells are being stimulated at the same time then a completion sequence can be developed to most effectively create a dense fracture network throughout the acreage. For example, if four laterals are being stimulated with two crews the outer wells can be stimulated first, followed by the inner wells where a more dense fracture pattern can be created. The treatment sizes can be adjusted based on the order in which the wells are stimulated. The completion sequence utilized will be a function of the well spacing, the structural geology, surface logistics, and the desire for hydraulic fracture density versus fracture length.

78. The advantages of zipper fractures have been known for decades, as shown by *Pearson*, an article published in the Journal of Petroleum Technology in 1992.[22] While not directly discussing the simultaneous or alternating process, *Pearson* does discuss the results of such a process. "This paper reports the first

[21] *Waters* (Ex. 1022) at 8.

[22] Pearson, C.M., Bond, A.J., Eck, M.E., and J.H. Schmidt. "Results of Stress-Oriented and Aligned Perforating in Fracturing Deviated Wells." J Pet Technol 44 (1992): 10–18. doi: https://doi.org/10.2118/22836-PA (Ex. 1023).

results of stress-oriented and aligned perforating of deviated wells at the Kuparuk River field, Alaska. Preferred perforation alignment and spacing are calculated for each well so the fractures from individual perforations link to produce a single 'zipper' fracture plane along the deviated [horizontal] wellbore."[23] *Pearson* further states that "[d]uring the past 7 years [prior to 1992], more than 600 new development wells have been fracture stimulated in the Kapurak River field. The large number of treatments has provided the opportunity for significant advances in the technical and operational aspects of hydraulically fracturing deviated wells."[24]

79. The Zipper-frac process (alternating perforations and pressurization of adjacent wells) has been well-known in the industry since at least 2008, particularly to those operators and fracturing companies operating in Shale regions such as the Barnett, Woodford and Marcellus shale formations. This contributes to the general engineering knowledge that a fracturing designer (engineer) had when planning operations of fracturing systems. *Waters* is one example of the well-known nature of this process, and dates to 2008.

---

[23] *Pearson* (Ex. 1023) at Summary.

[24] *Pearson* (Ex. 1023) at Introduction.

80. Another example of the well-known nature of the zipper-frac process in shale producing regions is *Mutalik,* a paper published by the SPE in 2008.[25] *Mutalik* discusses multiple case studies of wells using a "simo-frac" process to create more effective downhole formation fractures in the Barnett Shale. "In this paper, the case history of sequential and simultaneous fracturing of four similarly drilled and completed horizontal azimuth wells in Eastern Parker County is discussed."[26] *Mutalik* further describes:[27]

> Simultaneous fracturing (simo-fracs) of paired offset wells is one of the recent trends in Barnett fracturing and is being increasingly used by many operators. In this technique, two or more adjacent wells that are roughly parallel to each other are fractured simultaneously. The goal is to expose the shale to more pressure and produce a more complex, "three-dimensional web" of fractures by increasing the density of the hydraulic fracture network and increasing the surface area created by the frac job.

Mutalik describes the operational benefits of a simultaneous frac process. "Simo-fracs [are] expensive and require[] much more coordination and logistics and a larger location. At the same time, they are cost-effective as the fracturing equipment is being utilized more efficiently and two wells are being completed in one week

---

[25] Mutalik, P N, and Bob Gibson. "Case History of Sequential and Simultaneous Fracturing of the Barnett Shale in Parker County." Paper presented at the SPE Annual Technical Conference and Exhibition, Denver, Colorado, USA, September 2008. doi: https://doi.org/10.2118/116124-MS (Ex. 1024).

[26] *Mutalik* (Ex. 1024) at Abstract.

[27] *Mutalik* (Ex. 1024) at Background.

instead of two weeks."[28] Mutalik further teaches that, as of 2008, "simultaneous fracturing operators are now experimenting with triple fracs ('trifectas') or even quad-fracs in some cases.[29]

81. In addition to the above references, *Mayerhofer*[30] and *Rousell*[31] provide more information of the advantages and benefits of such a process. For example, *Mayerhofer* discusses "it may be more beneficial to drill laterals at closer spacing, with the chance of overlapping SRV's" (Stimulated Reservoir Volume).[32] This is the reason for the so-called "simul-fracs" and "zipper-fracs" in shale reservoirs where multiple parallel wellbores are either stimulated simultaneously or in short alternating sequence from one lateral to the next."[33]

---

[28] *Mutaik* (Ex. 1024) at Background.

[29] *Mutaik* (Ex. 1024) at Background.

[30] Mayerhofer, M. J., Lolon, E. P., Warpinski, N. R., Cipolla, C. L., Walser, D., and C. M. Rightmire. "What is Stimulated Reservoir Volume (SRV)?" Paper presented at the SPE Shale Gas Production Conference, Fort Worth, Texas, USA, November 2008. doi: https://doi.org/10.2118/119890-MS (Ex. 1025).

[31] Roussel, Nicolas P., and Mukul M. Sharma. "Optimizing Fracture Spacing and Sequencing in Horizontal-Well Fracturing." SPE Prod & Oper 26 (2011): 173–184. doi: https://doi.org/10.2118/127986-PA (Ex. 1026).

[32] *Mayerhofer* (Ex. 1025) at 12.

[33] *Mayerhofer* (Ex. 1025) at 12.

82. *Rousell* teaches that "[t]he numerical calculation of the fracture spacing required to avoid fracture deviation during propagation, for all three fracturing techniques, demonstrate the potential advantages of alternate fracture sequencing and zipper-fracs to improve the performance of stimulation treatments in horizontal wells. …. Simultaneous fracturing of two or more parallel adjacent wells, also referred to as simul-fracs or zipper-fracs, aim to generate a more complex fracture network in the reservoir."[34]

83. By at least 2014 the use of the zipper-frac process was widespread in hydraulic fracturing operations. As described by *Jacobs*:

> A horizontal well completion method known as zipper fracturing has been rapidly adopted over the last couple of years by companies in the Eagle Ford shale of south Texas. Instead of drilling and hydraulically fracturing one well at a time, the zipper method involves drilling multiple wells from a pad site and then hydraulically fracturing a stage in one well, while getting ready for the next, as wireline and perforation operations take place in another. The multiwell completion method earns its name from the zipper-like configuration of the fracture stages from wells drilled with relatively tight spacing.

Jacobs at 1. In addition to discussing the production and operational benefits of such a process, *Jacobs* discusses the prevalence of this process by 2014. For example, by 2014 nearly half of Schlumberger's completions in North America were completed with the zipper-fracturing method and "in less than 3 years, the proportion of zipper-

[34] *Rousell* (Ex. 1026) at 1.

fracturing completions … in the Eagle Ford shale of Texas…increased threefold to 85%."[35]

E. CONTINUOUS PUMPING FRACTURING

84. As hydraulic fracturing has increased in number of stages and number of wells treated, various techniques have been employed to meet the overall goal of reducing financial costs and non-productive time (NPT) at the wellsite. At the same time, techniques were developed to reduce wear and damage to the high horsepower pumps, valves and related equipment. One technique which furthers both of these goals is the use of continuous pumping to treat multiple stages in a well or multiple wells simultaneously or sequentially.

85. Early continuous pumping techniques from at least the 1960s were directed toward treating multiple zones (stages) in a well without stopping the pumps. "Wells with multiple producing zones can be fractured one zone at a time during continuous pumping."[36] *Webster* further describes that continuous pumping "is less expensive than treating one zone at a time using isolating packers".[37] By at least 2007, continuous pumping equipment and techniques were well known and

---

[35] *Jacobs* (Ex. 1009) at 3.

[36] K. R. Webster, W. C. Goins, Jr., and S. C. Berry, "A Continuous Multistage Tracing Technique," *Journal of Petroleum Technology,* vol. 17, no. 06, pp. 619-625, 1965, doi: 10.2118/977-pa (Ex. 1027).

[37] *Webster* (Ex. 1027) at Abstract.

practiced internationally. In 2007, Casero describes completion of three wells in the Kitina field of west Africa using a "Continuous Pumping Multi-State System (CPMSS) technique" which "ha[d] been used for six years in North America."[38] The CPMSS technique "allows pumping multiple hydraulic fracturing treatments without the need of intermediate operation such as bridge plugs or proppant plugs". Casero further teaches multiple benefits of a continuous pumping system including:

- With adequate bulk capacity, all stimulation can be done in hours instead of weeks.
- Quicker fluid recovery due to the short time for the injection process.
- Reducing rig costs may encourage additional fracturing treatments for enhanced stimulation of the well.

86. By 2018, *Rasenfross* observed that wells drilled in 2015 in the Permian were fractured using "zipper fracturing" and teaches "Zipper fracturing speed work by allowing continuous pumping and it reduces the risk of frac hits because the method only fractures rock where pressure has not been depleted by production.

[38] A. Casero, G. Pace, B. Malone, F. Cantaloube, L. Tealdi, H. Malonga, and R. Seale, "Continuous Pumping, Multistage, Hydraulic Fracturing in Kitina Field, Offshore Congo, West Africa," in *SPE International Symposium and Exhibition on Formation Damage Control*, 2008, vol. All Days, SPE-112442-MS, doi: 10.2118/112442-ms. [Online]. Available: https://doi.org/10.2118/112442-MS (Ex. 1028).

Now zipper fracturing is used to fracture even more wells at once."[39] *Rasenfross* further observes "Simultaneous fracturing is likely to create stronger connections [between wells] because the time between stages is relatively short."[40]

F. OPERATION PARAMETERS FOR FRACTURING

87. Whether part of a zipper fracturing operation and/or continuous pumping operation, a hydraulic fracturing operation includes operational parameters such as fluid flow and pressure that are specific to the operation. *Casero* further discusses a reduction in flow rate between stages to allow for mechanical execution of the frac job. In using the CPMSS technique, a mechanical operation includes dropping a degradable ball is dropped from the surface where it lands on a packer sleeve. The ball performs two functions. First, it acts as a seal to isolate the stages below the ball (like a valve). After the ball lands, the pump rate is increased again, and the differential pressure across the ball/seat causes activation of a sleeve, opening access to the perforations to be fractured.[41]

---

[39] S. Rassenfoss, "A Look Into What Fractures Really Look Like," *Journal of Petroleum Technology,* vol. 70, no. 11, pp. 28-36, 2018, doi: 10.2118/1118-0028-jpt. (Ex. 1029) at 6.

[40] *Rassenfoss* (Ex. 1029) at 6.

[41] *Casero* (Ex. 1028) at 4; R. Oberhofer, "Application of Ball-Drop Technology to Improve Efficiency and Stimulation of Limited Entry Completion Systems," in *Abu Dhabi International Petroleum Exhibition & Conference*, 2016, vol. Day 2 Tue, November 08, 2016, D021S052R004, doi: 10.2118/183427-ms. [Online]. Available: https://doi.org/10.2118/183427-MS (Ex. 1030).

88. Before the mechanical functions are completed, *Casero* describes "[t]he pumping rate is consistent at 20 bpm until the rate is reduced to have a controlled launch of the frac ball on the surface and then again when the ball is calculated to land at the fracture port".[42] *Casero*'s Figure 3 shows the rate reduction used to complete the mechanical action.[43]

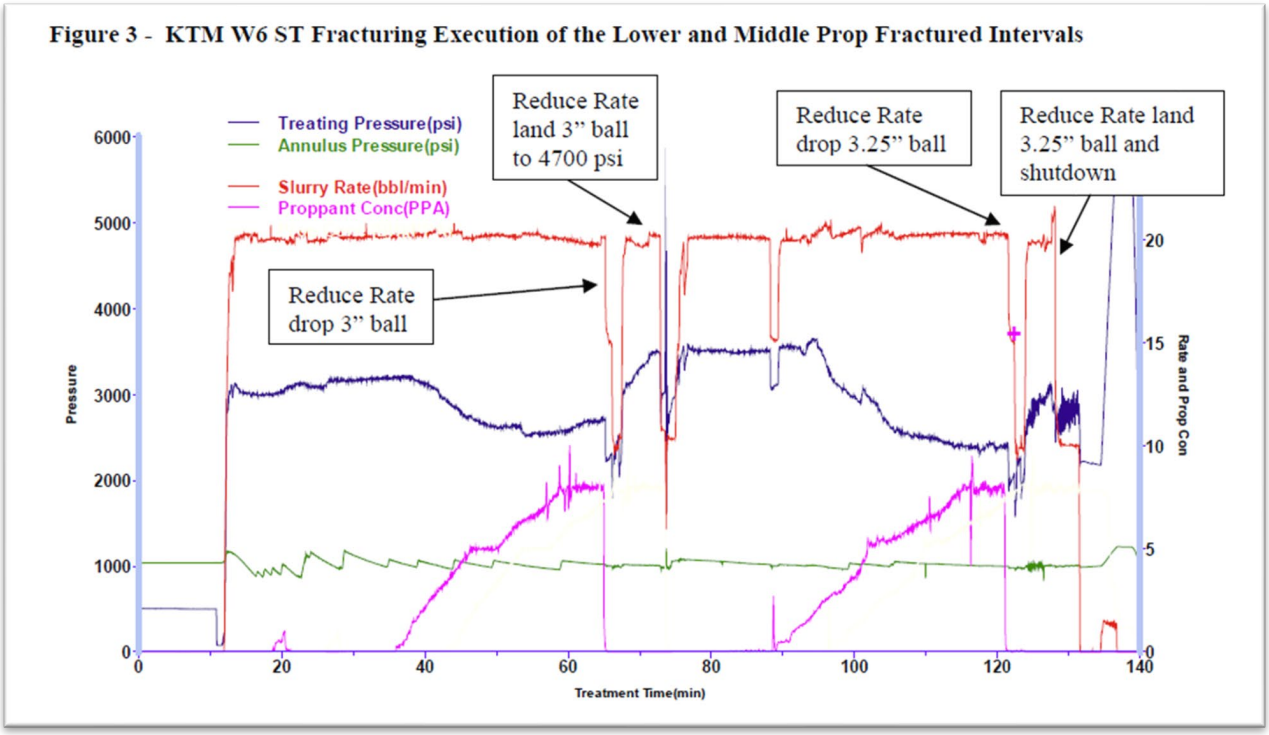

89. Figure 3 shows not only the reduction in rates necessary for controlled mechanical operations, but also the increase and then decaying pressures consistent with a fracturing operation taking place when using positive displacement pumps.

[42] *Casero* (Ex. 1028) at 5.

[43] *Casero* (Ex. 1028)at 16.

As further teaching, Figure 5 of *Casero* shows similar rate reductions in order to undertake mechanical operations.

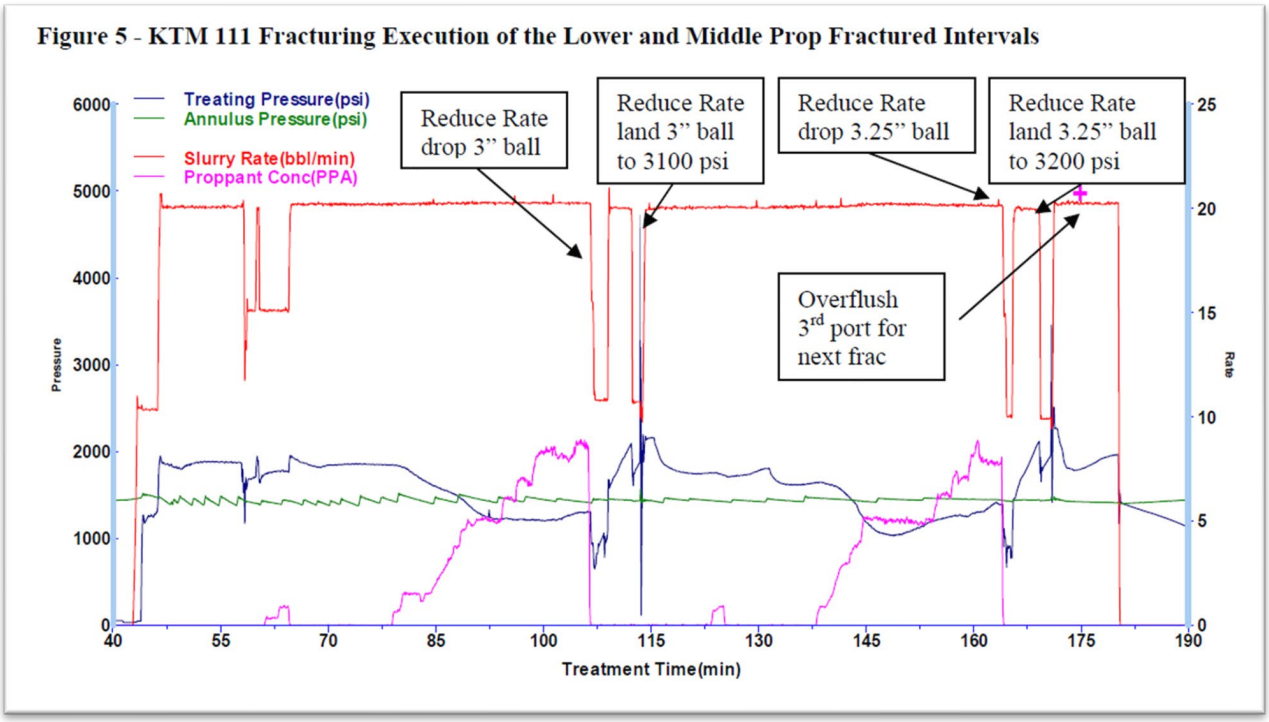

90. The *Tolman Article* describes another "Method and Apparatus Associated for Simultaneous Stimulation of Multi-Well Pads" in which "ExxonMobil has drilled multiple wells from single pads, and new technologies have been developed to efficiently stimulate the multiple pay zones in each well."[44] The technologies described by the *Tolman Article* enable "simultaneous stimulation of multiple wells on the same or different well pads, and while drilling additional

[44] Tolman, R. C., et al. (2009). Method and Apparatus for Simultaneous Stimulation of Multi-Well Pads. SPE Hydraulic Fracturing Technology Conference (Ex. 1031).

wells."[45] Like *Casero*, the *Tolman Article* teaches suspending mechanical operations during high flow (high pressure) operations.[46] In the system described in the *Tolman Article*, where the pumps are continuously operating, the "high pressure pumping" which results in/from high flow pumping, must be reduced in order for mechanical operations, such as valve manipulations, to occur.

91. The restriction on mechanical operations during high flow / high pressure conditions described by at least *Casero* and the *Tolman Article* is because mechanical operations, such as closing a valve or opening a valve, during high flow / high pressure conditions could result in damage to equipment and safety concerns. For example, closing a valve when there is high flow through the valve would result in high fluid velocity through the valve orifice, particularly as the valve neared a full close position. This high velocity increases damage to components such as the valve seats and seals, as well as causing vibrations through the piping system. Additionally, in systems using positive displacement pumps, such as those used for hydraulic fracturing, closing a valve during high flow conditions could create extremely high pressure increases and would result in damage to pumps, seals,

---

[45] *Tolman Article* (Ex. 1031) at 1.

[46] *Tolman Article* (Ex. 1031) at 4.

piping (iron) or other mechanical equipment. This is due to the inherent characteristics of positive displacement pumps. (*See* Sections IX.B and IX.C).

92. The above examples show that it has been well known and documented that operational parameters, including flowrate, are commonly considered during valve and pump mechanical operations for hydraulic fracturing.

G. TESTING

93. It has also long been established to vary operational parameters to conduct performance testing for fracturing operations. For example, since at least the 1980s the value of measuring oscillations in the pressure of a fracturing system to indicate the extent of the fractures downhole has been known. Oscillations in the well are created in two primary ways. First, during flowing conditions, if flow is suddenly changed (reduced) either through shutting a valve or a reduction in rate, the momentum of the flowing fluid creates a natural oscillation called water hammer. Second, during some well tests an intentional pressure transient or spike is created by suddenly opening and then closing a valve, or by the forced oscillations of the positive displacement pumps. The changes in the pressure oscillations, either natural or artificial, provide information about the extent of the fractures downhole.

94. According to *Holzhausen*, "[t]he growth of a hydraulic fracture increases the period of free oscillation in a well. Simultaneously, the decay rate of

free oscillations decreases."[47] *Holzhausen* refers to the "impedance of the hydraulic fracture" as the effect that fractures have on the fluid stream. "Because impedance is a function of fracture dimensions and the elasticity of the surrounding rock, impedance analysis offers a promising new approach for evaluating fracture geometry."[48] *Holzhausen* defines fracture impedance as "the ratio of volume change [in a fracture] to head [pressure] change," and is used to describe the effect that fractures have on the fluid stream.[49] The primary reason that analysis of the fracture impedance is possible is "[t]he configuration of surface and downhole pipe (tubing, casing, etc.) remains constant during a hydraulic-fracturing treatment, whereas the geometry of the fracture changes continuously as it is being created."[50] Accordingly, any change in behavior of the oscillations (decay, period, etc.) can be attributed to the changes in the fracture geometry.[51]

95. *Paige* tested *Holzhausen*'s concepts in field testing. During *Paige*'s tests "a pressure pulse is introduced into a well, and the resulting pressure trace is

---

[47] G. R. Holzhausen and R. P. Gooch, "Impedance of Hydraulic Fractures: Its Measurement and Use for Estimating Fracture Closure Pressure and Dimensions," in *SPE/DOE Low Permeability Gas Reservoirs Symposium*, 1985, vol. All Days, SPE-13892-MS, doi: 10.2118/13892-ms. [Online]. Available: https://doi.org/10.2118/13892-MS (Ex. 1032), at 1.

[48] *Holzhausen* (Ex. 1032) at 1.

[49] *Holzhausen* (Ex. 1032) at 3.

[50] *Holzhausen* (Ex. 1032) at 2.

[51] *Holzhausen* (Ex. 1032) at 4.

interpreted to give fracture dimensions."[52] *Paige* refers to this as "Hydraulic impedance testing (HIT)"[53] Further, "HIT uses the transient response of the fluid in the wellbore and fracture that results from the introduction of a pressure pulse into the well to provide information about the fracture."[54] *Paige* determined, through a series of field tests that "fracture length is obtained from the delay time (tf = 1.8 sec in Fig. 6) and the wavespeed".[55] Thus, as was common in well testing, *Paige's* testing involved varying and monitoring operational parameters over a period of time to assess the effects in the well.

---

[52] R. W. Paige, L. R. Murray, and J. D. M. Roberts, "Field Application of Hydraulic Impedance Testing for Fracture Measurement," *SPE Production & Facilities,* vol. 10, no. 01, pp. 7-12, 1995, doi: 10.2118/26525-pa. (Ex. 1033), at 1.

[53] *Paige* (Ex. 1033) at 1.

[54] *Paige* (Ex. 1033) at 1.

[55] *Paige* (Ex. 1033) at 4.

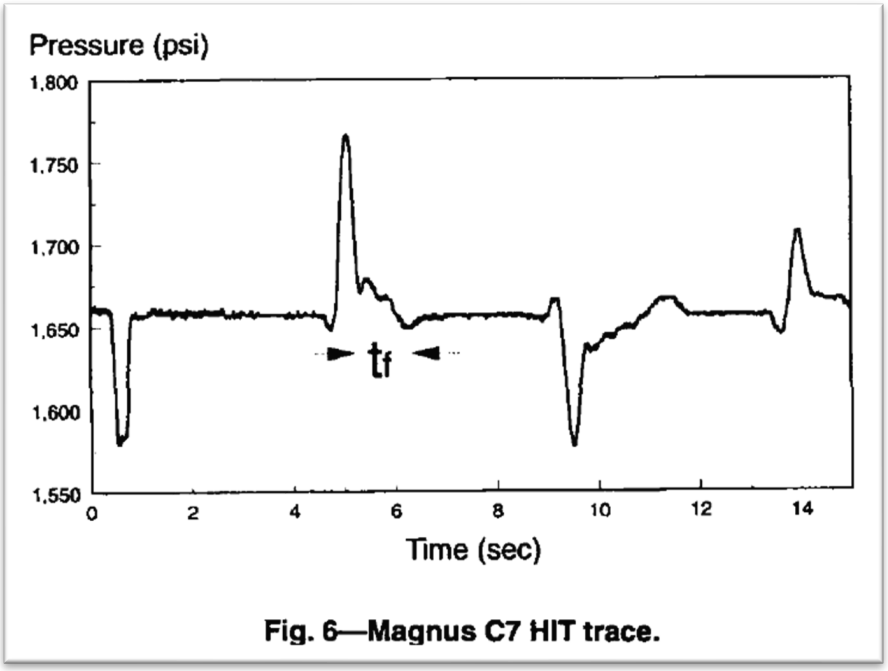

Fig. 6—Magnus C7 HIT trace.

96. *Massaras* describes using the same principles as *Paige* and *Holzhausen* to analyze fracture geometry using a "Rate Step-down Test (RST) also referred to as "Step-Down Test (SDT)" which, by 2007 "have been used worldwide for over 15 years". [56] To properly execute an RST, "a relatively large fluid volume should be injected prior to initiating the RST procedure of abrupt flow rate changes".[57] During a properly designed RST "the fracture geometry will not change dramatically during the very short RST procedure" because of the large volume injected into the fractures prior to the RST. As one example, Figure 9 of Manassas compares conditions where

[56] L. V. Massaras, A. Dragomir, and D. Chiriac, "Enhanced Fracture Entry Friction Analysis of the Rate Step-Down Test," in *SPE Hydraulic Fracturing Technology Conference*, 2007, vol. All Days, SPE-106058-MS, doi: 10.2118/106058-ms. [Online]. Available: https://doi.org/10.2118/106058-MS (Ex. 1034).

[57] *Massaras* (Ex. 1034) at 6.

the friction at the perforations dominates (left side plots) and compares it to conditions where the fracture friction dominates (right side plots). The characteristics of the pressure transients after a flow-rate reduction (often referred to as water hammer) indicate fracture geometry and the relationship between FEF and wellbore friction.

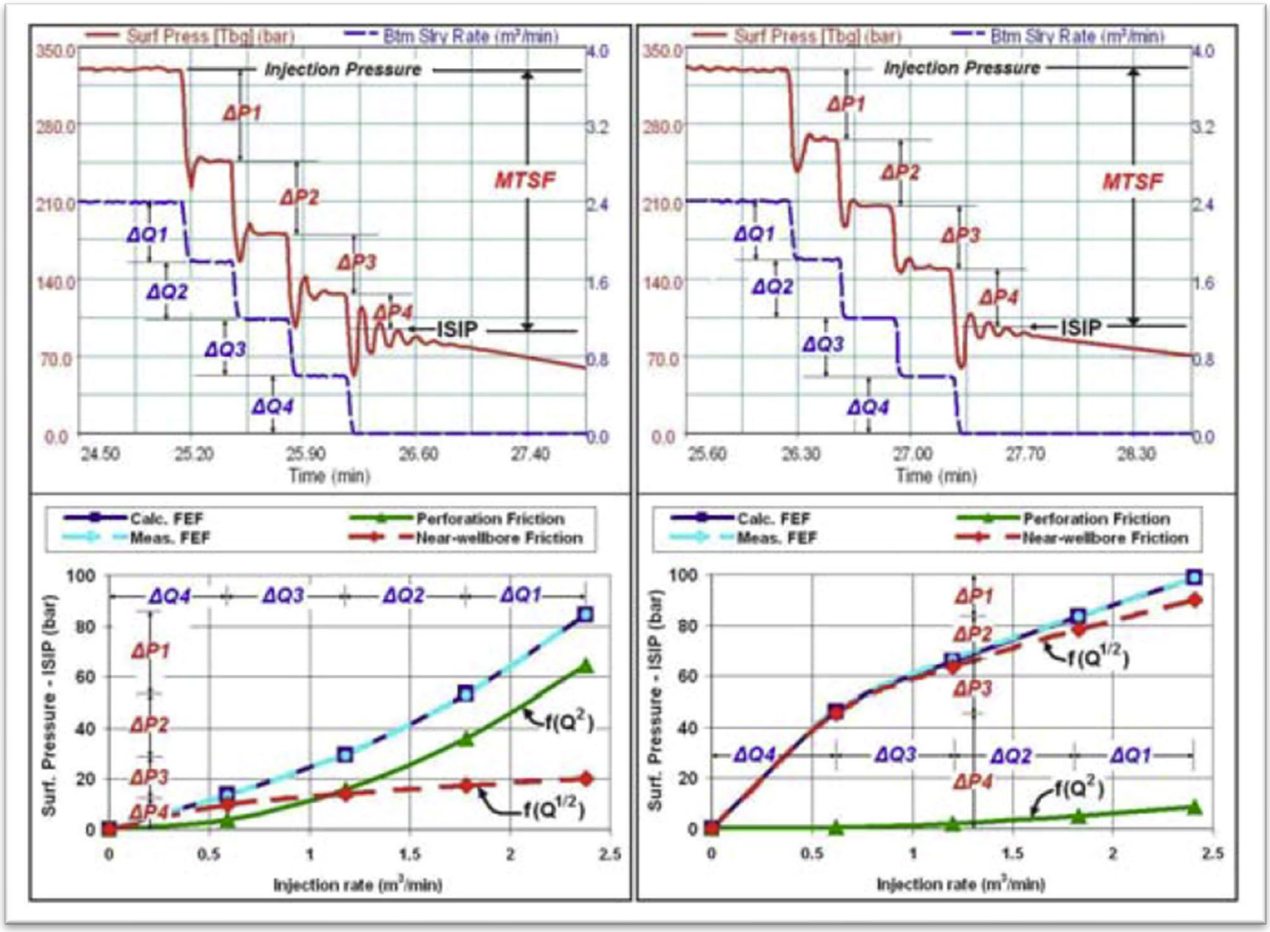

Massaras, Figure 9

97. *Mondal* expanded the understanding of pressure transient analysis, particularly as it relates to measured "water hammer". "Water hammer is a surge or

pressure wave that is created due to a sudden change in flow velocity in a confined system."[58] In a fractured well, however, traditional water hammer analysis is incomplete as "the presence of a porous medium [fractures] at the downstream/upstream end of an injection/production well makes it different from the traditional pipeline water hammer analysis."[59] In *Mondal*, based on work by *Paige* and others, "pressure and rate transients can be calculated at any point in the well or at the bottomhole" based on known well and fluid parameter relationships.[60] In *Mondal*'s analysis, a step change reduction in flowrate was applied to a well, and the resulting pressure oscillations (water hammer) were evaluated and applied using the known well and fluid relationships to determine the geometry of the fractures at the end of the wellbore. The energy storage characteristics of the wellbore and fluid create the resonance, as measured by the period (length of time), of the wellbore, and resistive features of the well bore create a loss of oscillation height over time. The relationships between these yield characteristics of the fractures.

---

[58] S. Mondal, "Pressure transients in wellbores: Water hammer effects and implications for fracture diagnostics," 2010 (Ex. 1035), at 12.

[59] *Mondal* (Ex. 1035) at 21.

[60] *Mondal* (Ex. 1035) at 34.

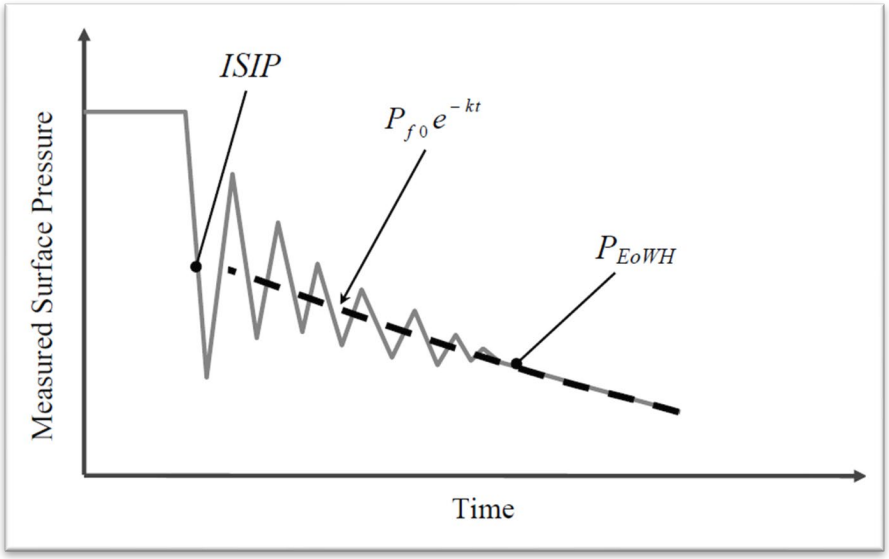

Mondal, Figure 2.9

98. *Mondal* teaches that the period of these oscillations is several seconds (~6-10 seconds, depending on well length). To properly evaluate the characteristics of the well using these oscillations, which can last several seconds, a sufficient number of the oscillations must be captured in order to calculate the period and decay rate, as shown in Figure 2.9 above. This data allows the user to "estimate fracture dimensions from water hammer data".[61] Accordingly, a POSITA would have been well aware of operationally reducing flow at the end of the fracture stage in order to perform a rate step down (RST) or water hammer analysis. Further, a POSITA would have been well aware that the reduction in flow would need to be held steady for a period of time necessary to capture a sufficient number of oscillations in order

[61] *Mondal* (Ex. 1035) at 66.

for the trend described above to be determined. Flow schedules such as the ones in *Massaras* and the *Tolman Article* with intentional reductions in flow rate below a threshold would have been well known to a POSITA long before the '770 Patent application. These data allow the user to "estimate fracture dimensions from water hammer data".[62]

X. OVERVIEW OF THE PRIOR ART

A. KRUPA

99. "Krupa" is a publication of a United States patent application, U.S. Patent Publication No. 2022/0268141A1 (Exhibit 1003). *Krupa* is entitled, "System and Method for an Automated and Intelligent Frac Pumping". *Krupa* was filed February 18, 2022, and claims priority to Provisional Application No. 63/153,607, filed February 25, 2021. *Krupa* is prior art to the '770 Patent because Krupa's effective filing date (February 25, 2021) is before the '770 Patent's priority date (May 17, 2021).

100. *Krupa* describes a "fracturing system with a plurality of devices connected together and in fluid communication with one or more wells."[63] *Krupa* also describes the use of a computer controller for "at least one continuous pumping operations for one or more wells and a fracturing pumping plan provided on a

[62] Mondal (Ex. 1035) at 66.

[63] Ex. 1003, Abstract.

software application."[64] References to continuous pumping for fracturing operations can be found throughout *Krupa*. As one example, Krupa teaches:

> The system may also include at least one continuous pumping operations for one or more wells and a fracturing pumping plan provided on a software application. The fracturing plan may include instructions to perform at least one continuous pumping operations for the one or more wells. The instructions may include a sequence of valve operations to direct fluid flow through a selected path into the one or more wells.[65]

101. Further, *Krupa* discloses sequencing of valves at a multi-well fracturing site in which "fracturing plans may include automating valves within the hydraulic fracturing system to have a valve sequencing (e.g., opening and closing) to direct fluids (e.g., frac fluid) in a selected path and/or control pressure and pump rates within the system." [66] *Krupa* also discloses "a wide variety of hydraulic fracturing equipment is used in oil and natural gas fields"[67], and describes this equipment to include "many gauges and meters for flow rate, fluid density, treating pressure, etc."[68] Further, *Krupa* points out that these "plurality of sensors working in conjunction with built hydraulic fracturing system may streamline and improve efficiency…due, in part, to reducing or eliminating human interaction with the

---

[64] Ex. 1003 at Abstract.

[65] Ex. 1003 at Abstract

[66] Ex. 1003 at [0007].

[67] Ex. 1003 at [0002].

[68] Ex. 1003 (emphasis added); *see also* [0014].

hydraulic fracturing systems by automating fracturing operations for continuous pumping in one or more wells."[69]

102. *Krupa's* continuously pumped hydraulic fracturing system comprises "a first wellhead assembly **201a** of a first well, a second wellhead assembly **201b** of a second well, a third wellhead assembly **20lc** of a third well, and a fourth wellhead assembly **201d** of a fourth well," (wellhead assemblies and wells annotated in red below) along with valves associated with each wellhead and well. Figure 1 of *Krupa* shows one arrangement of the wellheads and valves, each "coupled to at least one time and efficiency (TE) or zipper manifold **102** (annotated in blue) through one or more flow lines".[70]

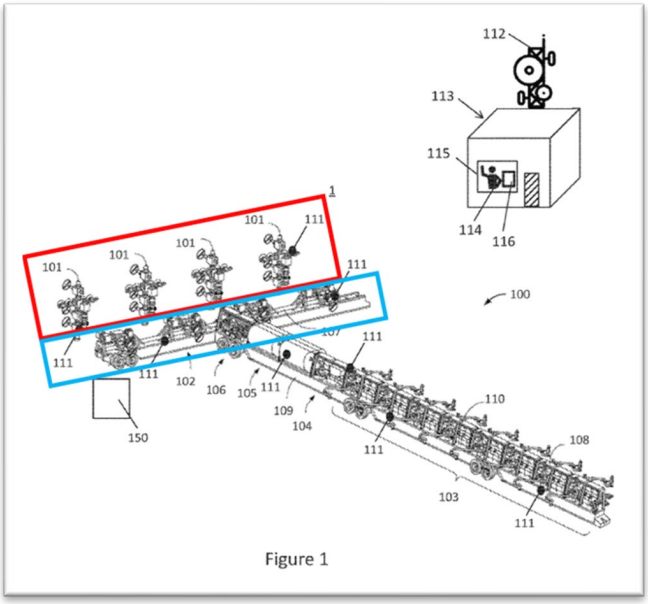

Krupa Figure 1

[69] Ex. 1003 at [0016].

[70] Ex. 1003 at [0019].

103. *Krupa* discloses specific examples of valve switching and sequencing to hydraulically fracture the wells while continuously pumping. As an example, Fig. 2A shows opening a first set of valves **221** and **222** (annotated in green) between a first well and a manifold in a hydraulic fracturing pumping system **200** to allow "fluid flow (see arrow **232**) to the first wellhead assembly **201a** [annotated in red]".[71]

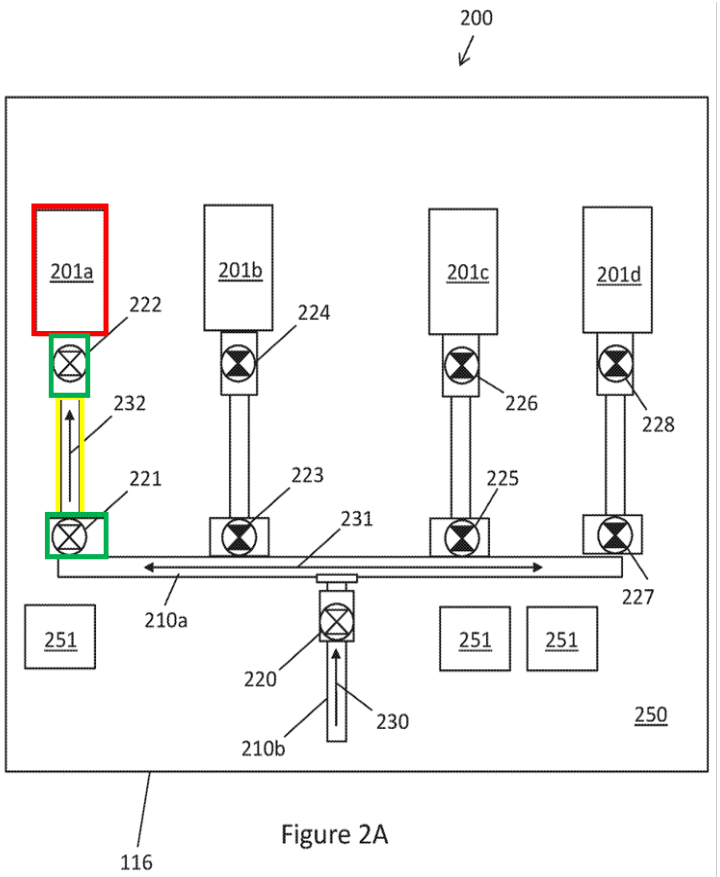

Figure 2A

104. Based, at least partly, on sensing a reduced pump flowrate and that the "pressure has stabilized at the reduced pump rate,"[72] *Krupa*'s system moves to the

[71] Ex. 1003 [0042] *see also* [0040] "for illustration purposes closed valves are shown as blacked out while open valves are shown having no fill, thereby

next step of the continuous pumping fracturing operation, where fluids are pumped "into a second well via the at least one pump manifold while continuously pumping the fluids into the first well by opening a second set of valves [223 and 224],"[73] as shown in Fig. 2B.

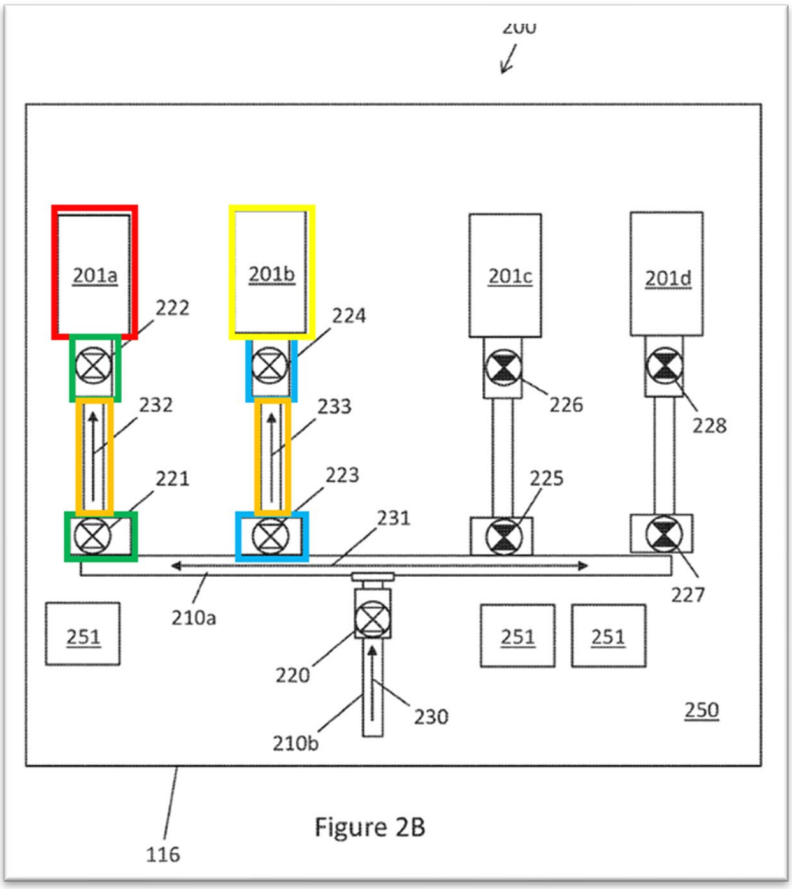

Figure 2B

105. After establishing flow into both wells, "[t]he method further includes closing the first set of valves to stop pumping the fluids into the first well and

---

indicating the available path of fluid flow (see arrows 230-235) through the system."

[72] Ex. 1003 at [0042].

[73] Ex. 1003 at [0005].

isolating and continuously pumping the fluids into the second well."[74] This configuration is shown in Fig. 2C, in which valves **221** and **222** are closed and valves **223** and **224** remain open. In this manner, "automatic hydraulic fracturing pumping may be used for continuous non-stop pumping for one or more wells."[75]

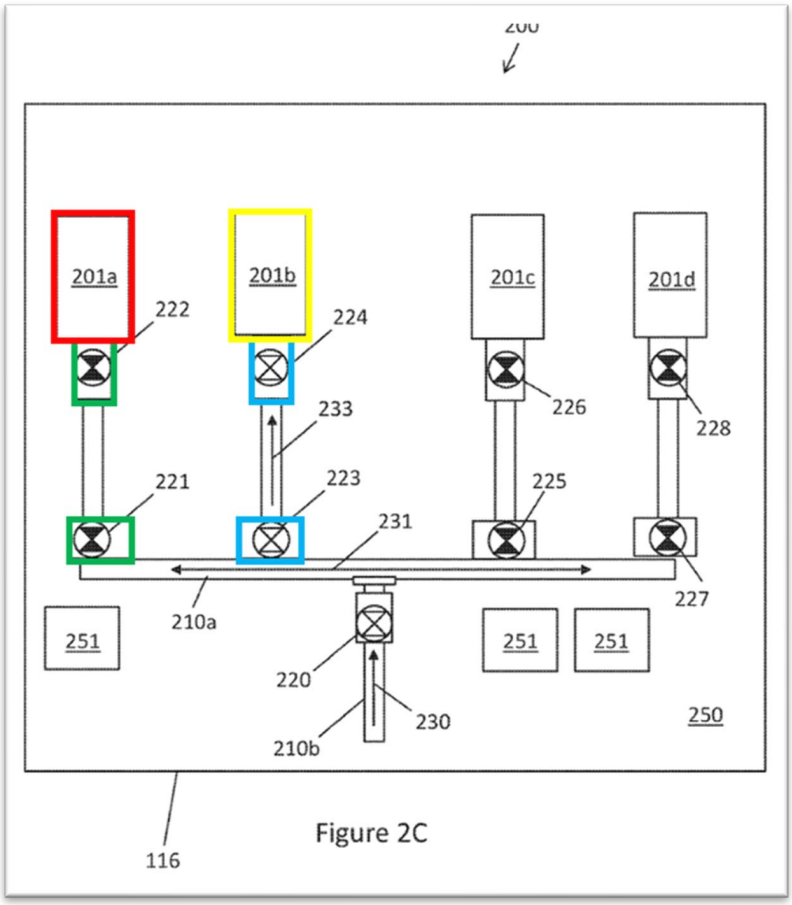

Figure 2C

106. Krupa's teaching of opening and closing (sequencing) valves continues through the third well (**201c**) and fourth well (**201d**) by opening and closing the

[74] Ex. 1003 at [0005].

[75] Ex. 1003 at [0017].

appropriate valves based, at least in part, on sensing flow in specific ranges or thresholds. These switching sequences are further depicted in Fig. 2D – Fig. 2G of Krupa. Although Krupa uses language such as first and second well in order to keep track of the steps of the method, it is clear from the disclosure of Krupa that the teachings of switching from first well to the second well are equally applicable to switching from second well to first well and would further apply to teaching of the third well and fourth well, and vice versa. Krupa discloses in ¶ [0046] "While it is noted that FIGS. 2A-2G describes the sequence of the fracturing pumping plan from the first wellhead assembly **201a** to the fourth wellhead assembly **201d**, the sequence may be conducted between any of the wellhead assemblies **201a-201d** in any order."[76] "Further, the sequence may be conducted from one wellhead assembly to a plurality of wellhead assemblies," or may transition "operations from two wells to two wells, etc. (one or more transitioning to one or more while continuously pumping)."[77]

[76] Ex. 1003 at [0446].

[77] Ex. 1003 at [0046].

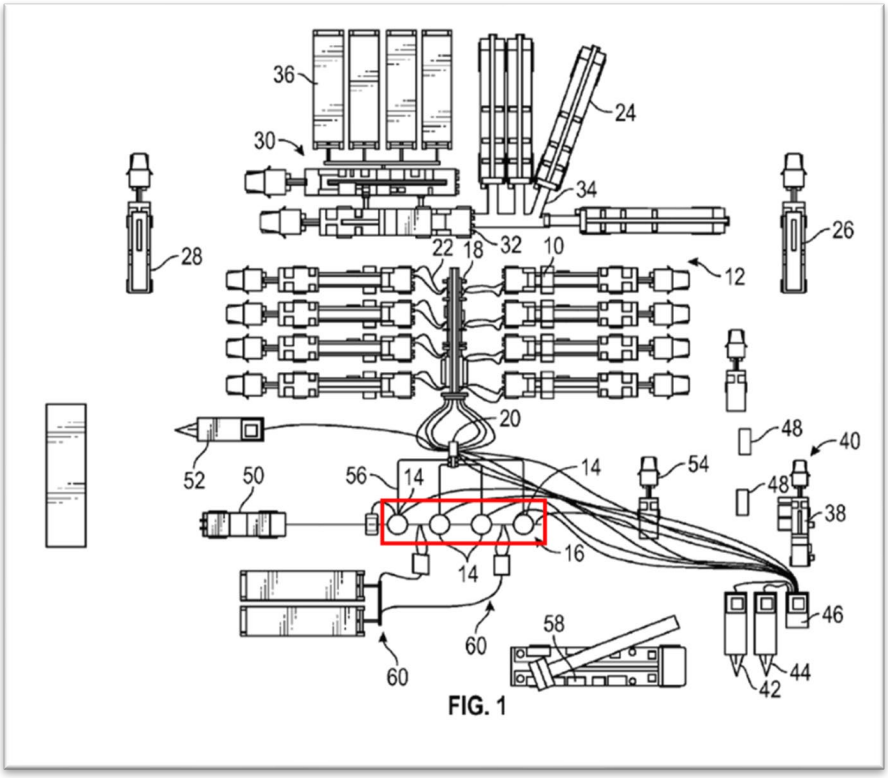
36
30
24
34
28
26
22
18
32
10
12
20
48
40
52
50
56
14
54
48
38
16
14
46
58
60
60
44
42
FIG. 1

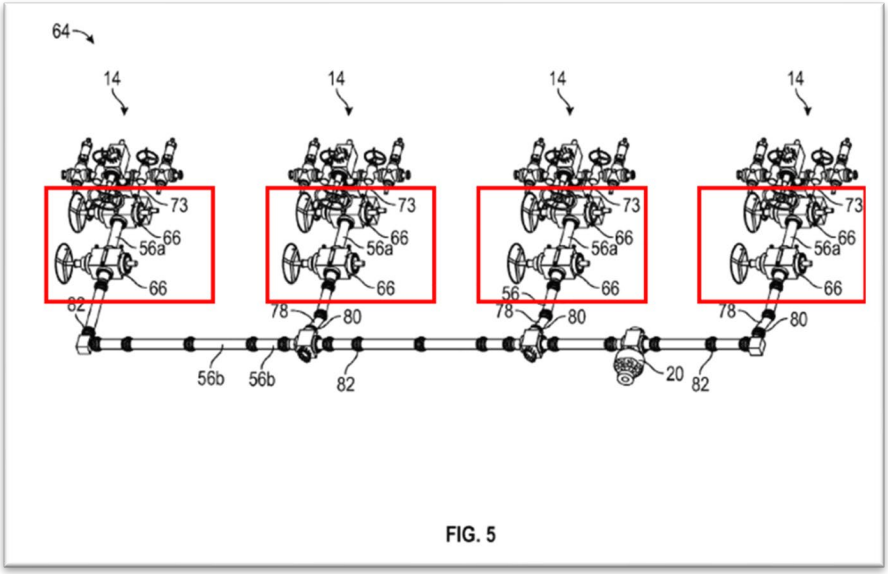
64
14
14
14
14
73
66
56a
66
62
78
80
56b
56b
82
20
82
FIG. 5

B. CARR

107. "Carr" is a publication of a United States patent application, U.S. Patent Publication No. 2019/0233275. (Exhibit 1004). *Carr* is entitled, "Method and Apparatus for Metering Flow during Centralized Well Treatment." *Carr* was filed on January 31, 2018, and published August 1, 2019, before the '770 Patent's priority date (May 17, 2021). Thus, *Carr* is prior art to the '770 Patent.

108. *Carr* discloses a system for providing a well stimulation fluid for "simultaneously treating multiple wells from a centralized location," the system including a manifold, a first flow meter, and a second flow meter.[78] The manifold can define a first isolated manifold path in fluid communication with a first wellhead and a second isolated manifold path in fluid communication with a second wellhead.[79]

109. As shown in FIG. 5 of *Carr*, a first valve 470 is disposed along the first isolated manifold path 122 and a second valve 472 is disposed along the second isolated manifold path.[80] "[T]he first valve 470 and the second valve 472 can allow for the first well 140 and the second well 142 to each be stimulated individually by opening the respective first valve 470 or the second valve 472 and closing the other

[78] Ex. 1004 at Abstract and [0001].

[79] Ex. 1004 at Abstract.

[80] Ex. 1004. at [0033].

valve."[81] According to *Carr*, "the first valve 470 and the second valve 472 can be used to control the flow rate to the first well 140, the second well 142 , or to both the first well 140 and the second well 142 simultaneously."[82]

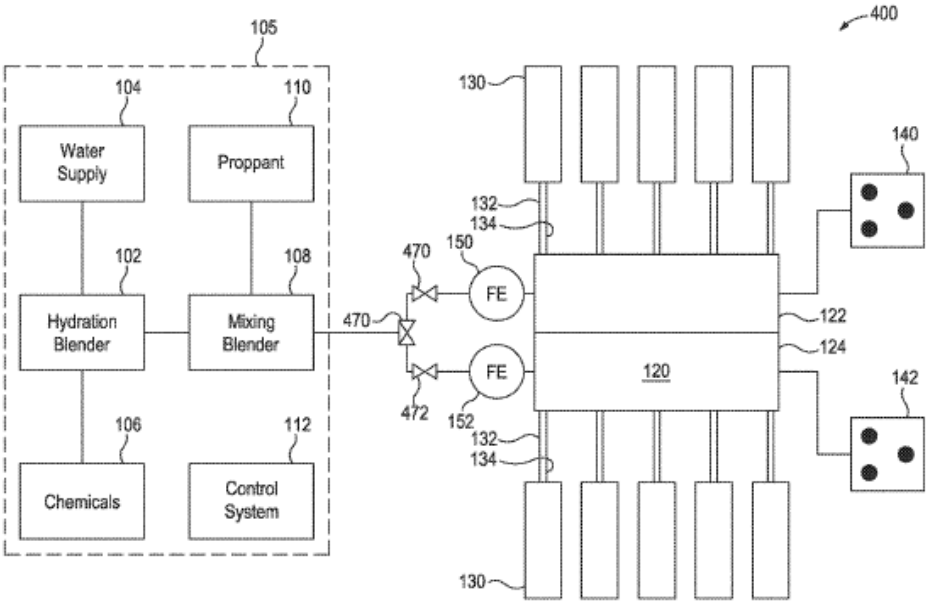

FIG. 5

110. *Carr*'s system may also include a proportioning valve 474 to "control and direct the flow from the mixing blender 108 to the first isolated manifold path 122 and the second isolated manifold path 124" such that flow can be separated or directed completely to either the first or second isolated manifold path 122, 124 or to both at a desired proportion.[83] "[T]he control system 112 can be utilized to control

[81] Ex. 1004 at [0033].

[82] Ex. 1004 at [0033].

[83] Ex. 1004 at [0034].

the position of the first valve 470, second valve 472, and/or the proportioning valve 474 by utilizing flow data from the first flow meter 150 and the second flow meter 152 in light of fluid flow targets for the first well 140 and/or the second well 142."[84]

C. BEUTERBAUGH

111. WO2020/145978 ("Beuterbaugh") was filed January 10, 2019, and published July 16, 2020, before the priority date (May 17, 2021) of the '770 Patent. (Exhibit 1005). Thus, *Beuterbaugh* is prior art to the '770 Patent.

112. *Beuterbaugh* is entitled, "Simulfrac Pulsed Treatment." *Beuterbaugh* discloses fracking multiple wells by alternatingly opening and closing valves to the wells, including switching valves and plug valves, to divert high pressure "fracturing fluid near instantaneously from one well to the other well."[85] High pressure pump(s) "run at a constant rate to provide a substantially constant pressure of … fracturing fluid" to the wells' switching valves.[86] Plug valves, which are positioned downstream from associated switching valves, are operated (opened/closed) before and after switching valves are operated, e.g., to allow absolute fluid flow shut off to associated wells.[87] In an example, a second switching valve **105b** to a second well is opened, while a first switching valve **150a** to a first well is at least partially closed

[84] Ex. 1005 at [0035].

[85] Ex. 1005 at Abstract.

[86] Ex. 1005 at [0018], [0022].

[87] Ex. 1005 at [0019].

or closing, shown in Fig. 3B, and associated plug valves are opened/closed before and after operation of the switching valves.[88]

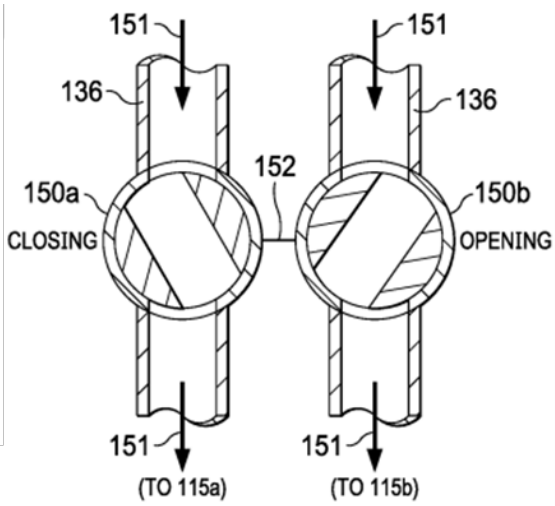

FIG. 3B

113. *Beuterbaugh* teaches "the time duration that a switching valve … is open can vary, or can be maintained of a constant duration from cycle to cycle."[89] Additionally, "[t]he number of high pressure pumps and total flow rate from the one or more high pressure pumps … determine the pulse size of the fracturing fluid that are selectively diverted to the plurality of wells" by time duration between operating the valves.[90]

[88] Ex. 1005 at [0027].

[89] Ex. 1005 at [0022].

[90] Ex. 1005 at [0018].

D. TOLMAN

114. U.S. Patent No. 8,490,685 ("Tolman") is a U.S. National Stage Application of PCT/US06/028608, filed July 24, 2006, and claims priority to U.S. Provisional Application No. 60/709,586, filed August 19, 2005,[91] before the priority date (May 17, 2021) of the '770 Patent. (Exhibit 1006). Thus, *Tolman* is prior art to the '770 Patent.

115. *Tolman* is entitled, "Method and Apparatus Associated with Stimulation Treatment for Wells." *Tolman* describes a method and apparatus for "connecting multiple wells to a stimulation fluid pumping system via a pumping system manifold."[92] *Tolman*'s pumping system provides a system such that a first stimulation treatment may be pumped into the first well concurrently with the preparation of the second well.[93] Figure 3 of *Tolman* (below) shows a flow chart of operations performed on a multi-well site, where "pumping," "preparing," and conducting "other operations" on different wells may be performed "in a concurrent or substantially simultaneous manner."[94] "Pumping operations may include… pumping [and] manipulating pumping manifold valves, wellhead tree valves and/or

[91] Ex. 1006.

[92] Ex. 1006 at Abstract.

[93] Ex. 1006 at Abstract.

[94] Ex. 1006 at 7:48-56.

flowback manifold valves," and "other operations may include … injecting fluid in another well [and] manipulating valves."[95]

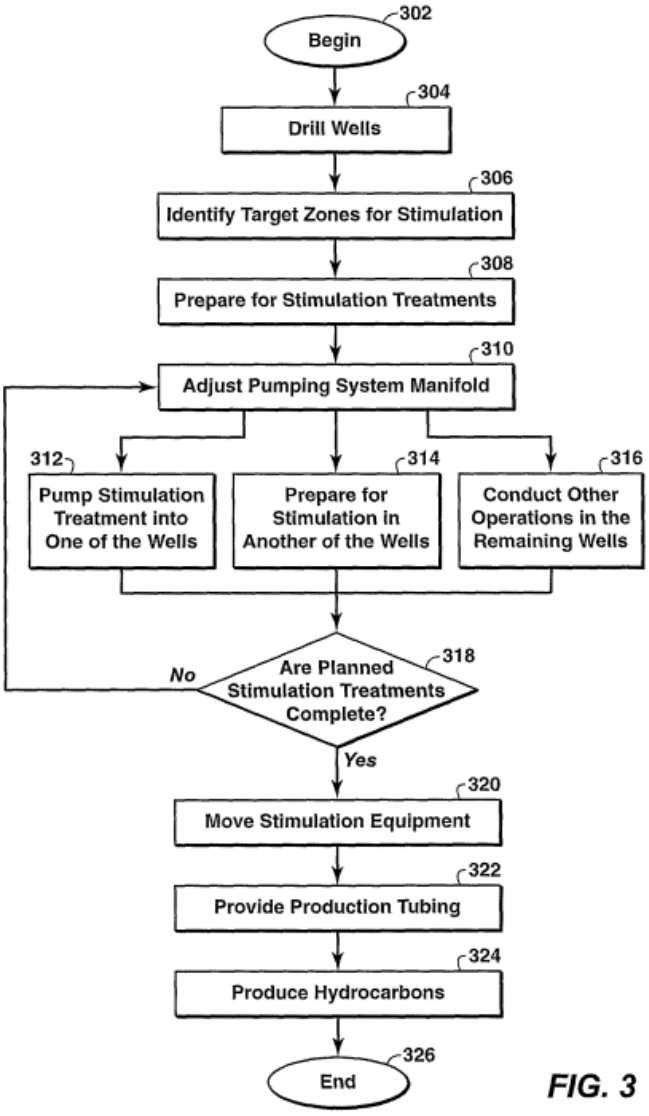

FIG. 3

116. Figure 2 (below) shows an example of *Tolman*'s systems, which includes a "pumping system manifold 206" that includes various components used

[95] Ex. 1006 at 8:10-14 and 31-38.

to manage fluid flow from a stimulation fluid pumping system 202 to multiple well trees 106a-106c, such as valves and measurement devices (e.g., flow meter 226).[96]

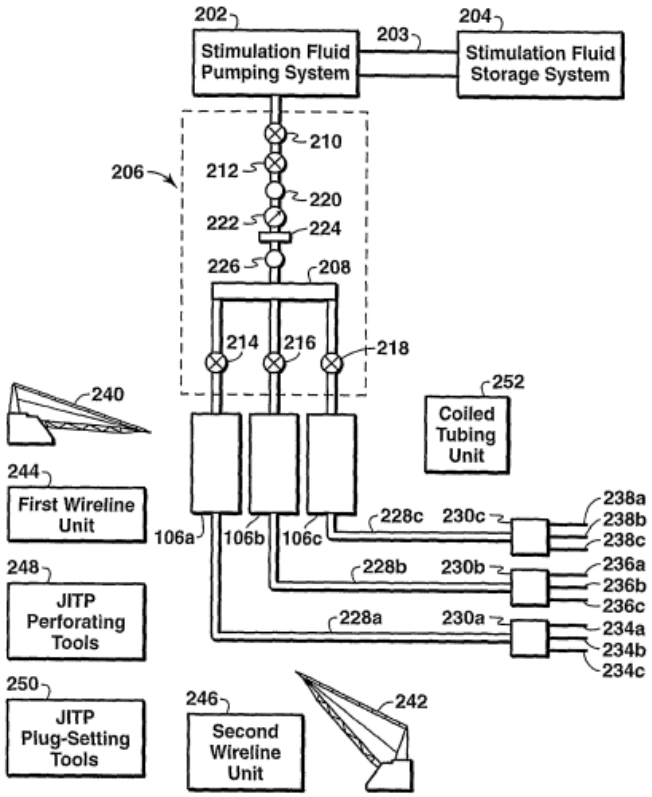

FIG. 2

117. The manifold 206 may be used to "manage the flow paths" from the pumping system 202 to different wells via "a main manifold valve 210" and manifold well valves 214, 216, 218 associated with each well.[97] "These valves 210, 214, 216 and 218 may be actuated or positioned to a full-open or full-closed position to provide [a flow path or] hydraulic isolation between individual wells 104a-104c

[96] Ex. 1006 at 6:48-55, 7:10-14.

[97] Ex. 1006 at 6:55-65.

and the stimulation fluid pumping system 202."[98] "Processor-based devices," such as computer systems, may be used to control the system.[99]

E. JACKSON

118. U.S. Patent Publication No. 2007/0023184 ("Jackson") was filed May 30, 2006 and published February 1, 2007. (Exhibit 1007). Jackson is prior art to the '770 Patent because Jackson's filing date is before the '770's priority date (May 17, 2021) and is even before the filing date of the earliest application in the chain of CIP parent applications to the '770 Patent (December 14, 2017).

119. *Jackson* is directed to "[a] process for fracturing a selected region of a formation including: introducing a supply of fracturing fluid to the region of the formation until a first threshold is reached."[100] *Jackson* describes a fracturing process that includes "introducing a supply of fracturing fluid to the region of the formation until a first threshold is reached, adjusting the flow of the fracturing fluid … to reach a second threshold, adjusting the flow of the fracturing fluid ... to reach a third threshold, and ceasing flow of the fracturing fluid to the region of the formation."[101] *Jackson* teaches that these thresholds "may be defined by at least one criterion selected from a set of criteria consisting of: (a) *a time period threshold*; (b)

---

[98] Ex. 1006 at 7:3-7 and 23-27.

[99] Ex. 1006 at 14:3-21.

[100] Ex. 1007 at Abstract.

[101] Ex. 1007 at Abstract.

a non-participating gas [fracturing fluid] flow rate threshold; (c) a well bore surface or bottom hole pressure threshold; (d) a well bore surface or bottom hole rate of pressure change threshold (e) a gas quantity threshold and (f) a formation condition threshold."[102]

120. *Jackson* teaches that fracturing is conducted in "stages" and using thresholds, such as a flowrate threshold, a time threshold, or a combination of flowrate and time, is used to determine when the stage is complete. As an example, *Jackson* discloses "The first threshold may be reached during a pressurization step and that pressurization may be stopped after a fixed time, such as at least one minute, after a peak pressure is reached, after a fixed quantity of flow (which may be measured either as a mass flow or as a normalized volumetric flow, for example) or after a formation condition is determined."[103] *Jackson* provides an example of the fracturing stages, including the reduced flow that signals the end of the fracturing stage. For example, Fig. 3 shows a reduction in "Nitrogen Rate" and "Proppant", which together form the fracturing fluid, at the end of the fracturing stage.

[102] Ex. 1007 at [0017] see also Claim 20.

[103] Ex. 1007 at [0018].

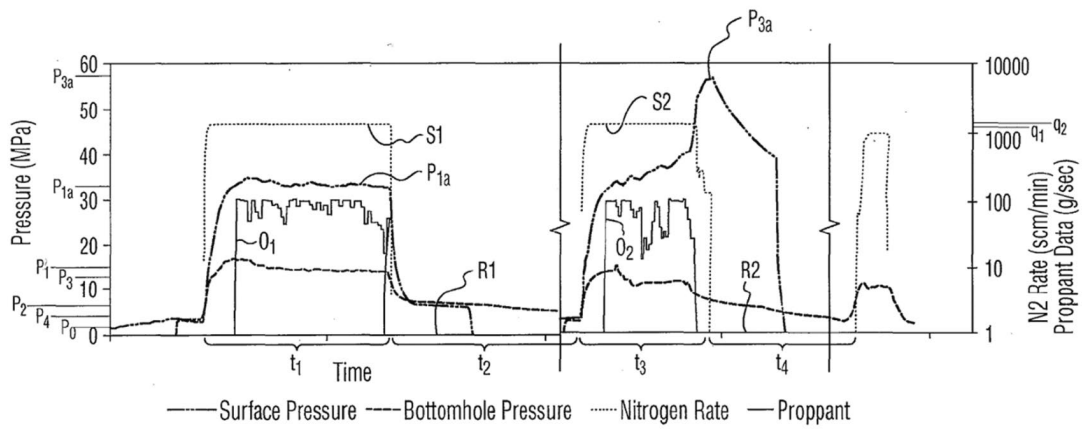

FIG. 3

Jackson Fig. 3

121. Finally, *Jackson* discloses several specific flowrate thresholds as examples including at least "300 scm (standard cubic meters per minute)", "0 scm" and "1000 scm." Further, *Jackson* discloses several specific combined flowrate and time thresholds including "time period of more than 1 minute and less than 24 hours of a flow rate of dilation fluid[104] of less than 300 scm" [105] and "the first threshold may be defined, at least in part, by an introduction of dilation fluid for a period of 30 seconds to 20 minutes at a flow rate of at least 300 scm, the second threshold may be defined as a time period of more than 1 minute and less than 24 hours of a flow

[104] A dilation fluid is a type of fracturing fluid, as Jackson teaches that the disclosed methods include "pressurizing" and "urging a fracture dilation fluid with a proppant" into the well. *See, e.g.*, Ex. 1007 at Claim 30.

[105] Ex. 1007 at [0021]; *see also* Claim 22.

rate of dilation fluid of less than 300 scm, which may include 0 scm, and the third threshold may be defined as an introduction of dilation fluid for a period of 30 seconds to 20 minutes at a flow rate of at least 300 scm."[106]

XI. GROUNDS 1 & 2: ANTICIPATED BY AND/OR OBVIOUS OVER *KRUPA*

122. It is my opinion that *Krupa* discloses each and every element of Claims 1-38 of the '770 Patent. To the extent that the Board determines *Krupa* does not anticipate the claims, it is my opinion that *Krupa* renders Claims 1-38 of the '770 Patent obvious.

A. INDEPENDENT CLAIM 1

123. It is my opinion that *Krupa* discloses (and therefore anticipates), or at least renders obvious, Claim 1 of the '770 Patent. Details regarding the specific disclosures of *Krupa* are contained in the subsections following. To the extent the Board determines that *Krupa* does not explicitly disclose the limitations of Claim 1, a POSITA would have found Claim 1 to be obvious in light of the disclosure and teachings of *Krupa*.

[106] Ex. 1007 at [0021].

a. <u>1.1: "1. A method, comprising: communicating fluid to a first well via a manifold and a first valve, the first valve being associated with both the manifold and the first well; and"</u>

124. To the extent the preamble is limiting, *Krupa* discloses a method of communicating fluid to a plurality of wells. [107] The title of *Krupa* is "System and Method for an Automated and Intelligent Frac Pumping."[108] A POSITA would have recognized "frac pumping" to refer to pumping related to hydraulic fracturing. Krupa further describes "a built hydraulic fracturing system [] in fluid combination with one or more wells" as well as "instructions to perform at least one continuous pumping operations for the one or more wells."[109] Therefore, *Krupa* discloses a method.

125. As part of a fracturing plan, *Krupa* discloses "[t]he method may include pumping fluids into a first well via at least one pump manifold by opening a first set of valves."[110] The disclosure of *Krupa* nearly mirrors the claimed limitation. In order to pump fluids (and therefore communicate the fluid) into a first well (annotated in red) via both the manifold (210a) and a first set of valves (annotated in green), the

---

[107] I understand that the preambles may not be limiting. However, I include analysis of the preamble for Claim 1 out of an abundance of caution.

[108] Ex. 1003 at Title.

[109] Ex. 1003 at Abstract.

[110] Ex. 1003 at [0005].

valves must necessarily be associated with both the manifold and the first well. Fig. 2A of *Krupa* shows this configuration of the hydraulic fracturing system.

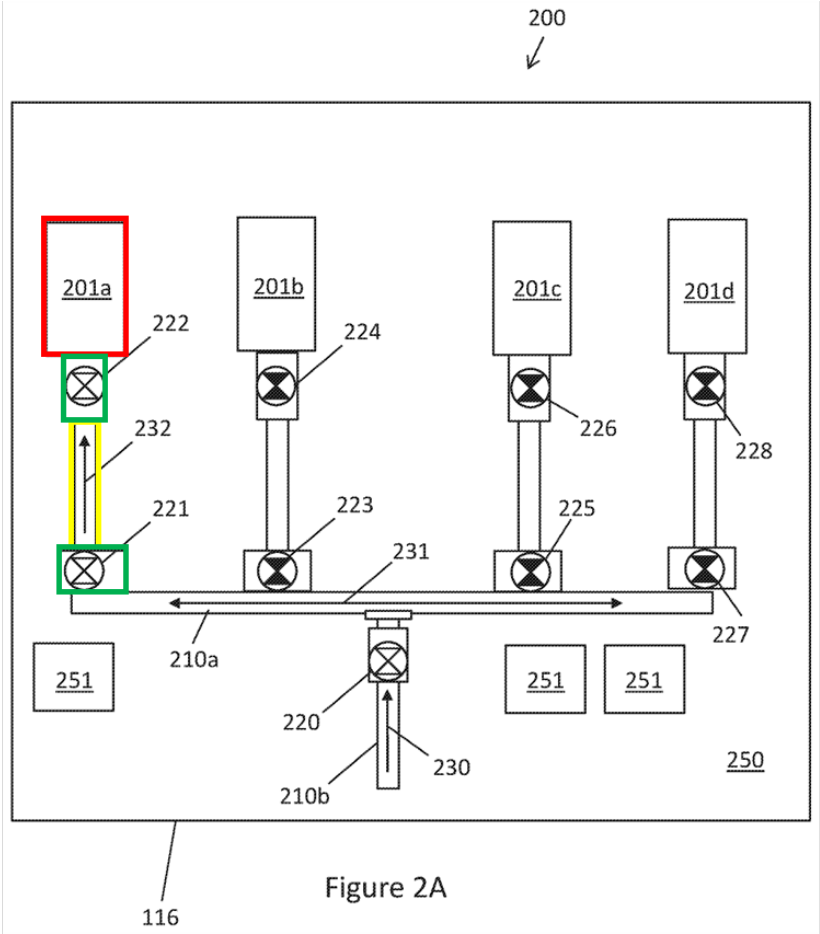

Figure 2A

126. *Krupa* discloses, for illustrative purposes in Figures 2A – 2G "closed valves are shown as blacked out while open valves are shown having no fill, thereby indicating the available path of fluid flow (see arrows **230-235**) through the system."[111] As shown in Fig. 2A, the valves **221** and **222** (annotated in green) which allow flow of fracturing fluid into wellhead **201a** (annotated in red, associated with

[111] Ex. 1003 at [0040].

the first well) are open, allowing fluid flow 232, thus permitting performance of a first hydraulic fracturing operation on a first well.

127. Accordingly, *Krupa* discloses limitation 1.1.

b. <u>1.2: "in response to determining that the fluid communicated via the manifold has satisfied one or more conditions:"</u>

128. *Krupa* discloses this limitation. *Krupa* teaches "[t]he method may also include pumping the fluids into a second well via the at least one pump manifold while continuously pumping the fluids into the first well *by opening a second set of valves* [claimed second valve]."[112] The move to open the second set of valves is triggered by determining the fluid communicated via the manifold has satisfied one or more conditions. As one example of using fluid conditions to determine the state of the fracturing job, *Krupa* teaches pumping fluid into the well "at a full pump rate of about 50-150 bbl./min."[113] Further, *Krupa* teaches "a pump rate may be reduced from the full pump rate. For example, the pump rate may be reduced to 5-15 bbl./min. Once a pressure has stabilized at the reduced pump rate, the software application may move the fracturing pumping plan to the next step."[114] *Krupa* teaches that once the pumping flowrate (as well as associated pressure) have

[112] Ex. 1003 at [0005] (emphasis added).

[113] Ex. 1003 at [0042].

[114] Ex. 1003 at [0042].

stabilized below, for example, 15 bbl./min, the system determines that the fracturing job is at the end of that particular stage, and then "move[s] the fracturing pumping plan to the next step."[115] *Krupa's* disclosure of, at least, "a pump rate may be reduced to 5-15 bbl/min" and "once the pressure has stabilized at the reduced pump rate" is an example of a fluid communicated via the manifold (annotated in pink below) satisfying one or more conditions. Further, other fluid conditions being satisfied are disclosed by *Krupa* including "pressure has stabilized" and "a total volume of the flush fluid is pumped."[116]

[115] Ex. 1003 at [0042].

[116] Ex. 1003 at [0042].

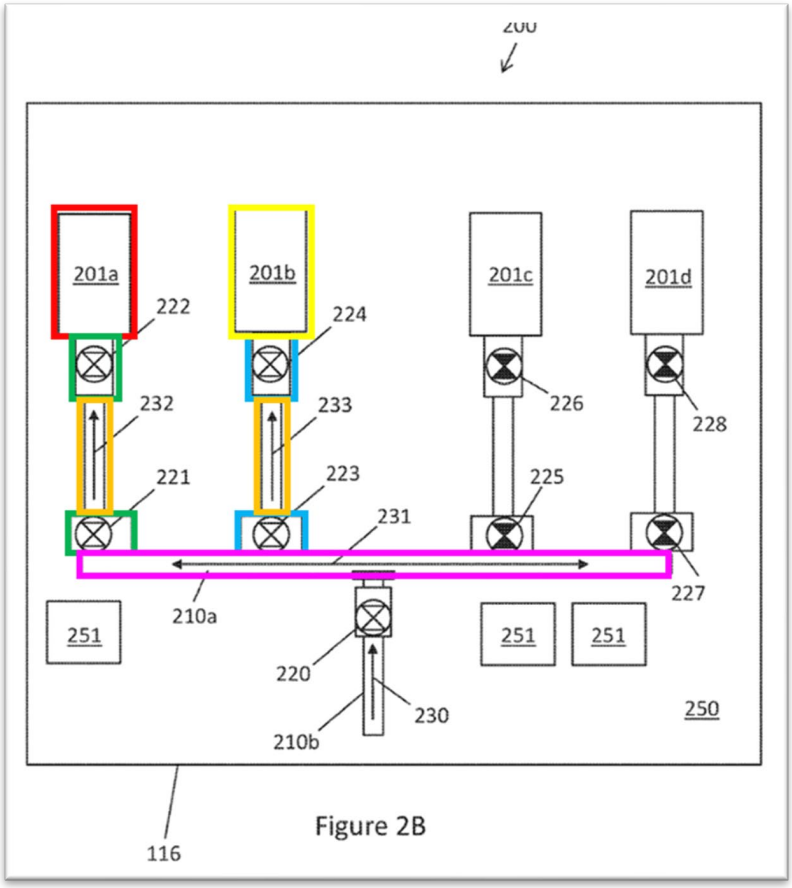

Figure 2B

129. Krupa discloses determining fluid communicated via the manifold (e.g. **210a**) has satisfied one or more conditions (e.g. flowrate reduction, pressure is stabilized, total volume pumped). Thus, *Krupa* discloses the limitations of 1[b]

c. <u>1.3: "opening a second valve; communicating fluid to a second well via the second valve; and"</u>

130. *Krupa* discloses this limitation. *Krupa* teaches "[t]he method may also include pumping the fluids into a second well via the at least one pump manifold

while continuously pumping the fluids into the first well *by opening a second set of valves* [claimed second valve]."[117]

131. This configuration of the hydraulic fracturing system is shown in Fig. 2B.

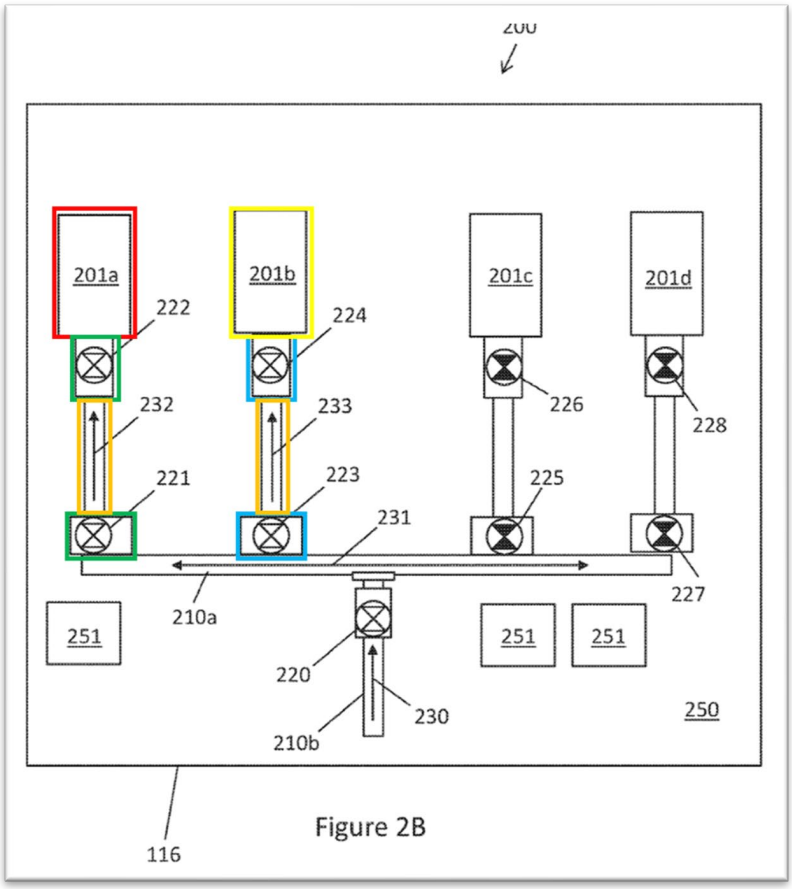

Krupa Figure 2B

132. In Fig. 2B, valves **223**, **224** (annotated in blue) are opened while valves **221**, **222** (annotated in green) are still open. This allows fracturing fluid flow both into wellhead **201a** (annotated in red) and **201b** (annotated in yellow). Further, as

[117] Ex. 1003 at [0005] (emphasis added).

discussed above regarding Claim Limitation 1.2, "With both the first set of valves **221**, **222** and the second set of valves **223**, [claimed second valve] **224** open, the flush fluid flows (see arrows **232**, **233**) [annotated in orange] into both the first wellhead assembly and the second wellhead assembly **201b**."[118] *Krupa* teaches further "[a] hydraulic fracturing system **200** may include a first wellhead assembly **201a** of a first well [annotated in red], [and] a second wellhead assembly **201b** of a second well. [claimed second well, annotated in yellow]."[119] Thus, *Krupa* teaches communicating fluid to a second well via wellhead **201b** and second valve **223**.

133. Accordingly, *Krupa* discloses opening a second valve (e.g., **223**) and communicating fluid to a second well via the second valve as claimed in Claim Limitation 1.3.

d. <u>1.4: "closing the first valve after opening the second valve."</u>

134. *Krupa* discloses this limitation. *Krupa* teaches "[t]he method further includes closing the first set of valves to stop pumping the fluids into the first well and isolating and continuously pumping the fluids into the second well."[120] For example, *Krupa* discloses that after fluid flow into the two wells (*e.g.*, **201a, 201b**) has stabilized, the first valves (**221, 222**) to the first well (**201a**) are closed after the

[118] Ex. 1003 at [0043].

[119] Ex. 1003 at [0038].

[120] Ex. 1003 at [0005].

second valves (**223 or 224**) were opened.[121] This configuration is shown in Figure 2C.

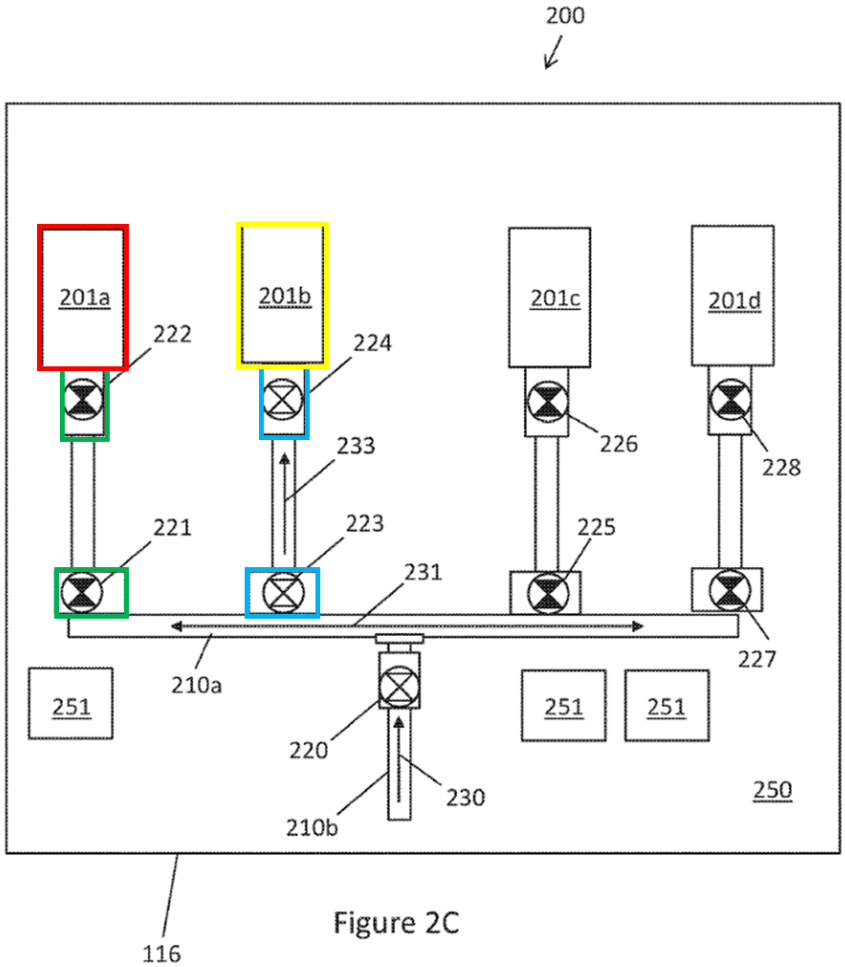

Figure 2C

135. Accordingly, *Krupa* discloses the limitations contained in Claim Limitation 1.4.

136. Because *Krupa* discloses each and every element of Claim 1, Claim 1 is anticipated by *Krupa*. To the extent the Board determines that *Krupa* does not explicitly disclose the limitations of Claim 1, a POSITA would have found the

[121] Ex. 1003 at [0005], [0043].

pumping and switching arrangement of Claim 1 to be obvious considering the disclosure and teachings of *Krupa*, as discussed above.

B. DEPENDENT CLAIM 2

137. Dependent Claim 2 depends from Claim 1. In addition to the disclosure of the limitations of Claim 1 discussed above, *Krupa* discloses the additional limitations of Claim 2:

a. 2.1: "2. The method of claim 1, further comprising: communicating fluid to a third well via the manifold and a third valve, the third valve being associated with both the manifold and the third well; and"

138. *Krupa* teaches "the fracturing pumping plan may next open a third set of valves **225**, [annotated in green, claimed third valve] **226** while the second set of valves **223, 224** are still open. With both the second set of valves **223, 224** and the third set of valves **225, 226** open, the flush fluid flows (see arrows **233, 234**) into both the second wellhead assembly **20lb** and the third wellhead assembly **201c** [annotated in red, associated with third well]."[122] As shown in Figure 2E, the fluid is communicated to the third well via manifold **210a** (annotated in pink).

[122] Ex. 1003 at [0044].

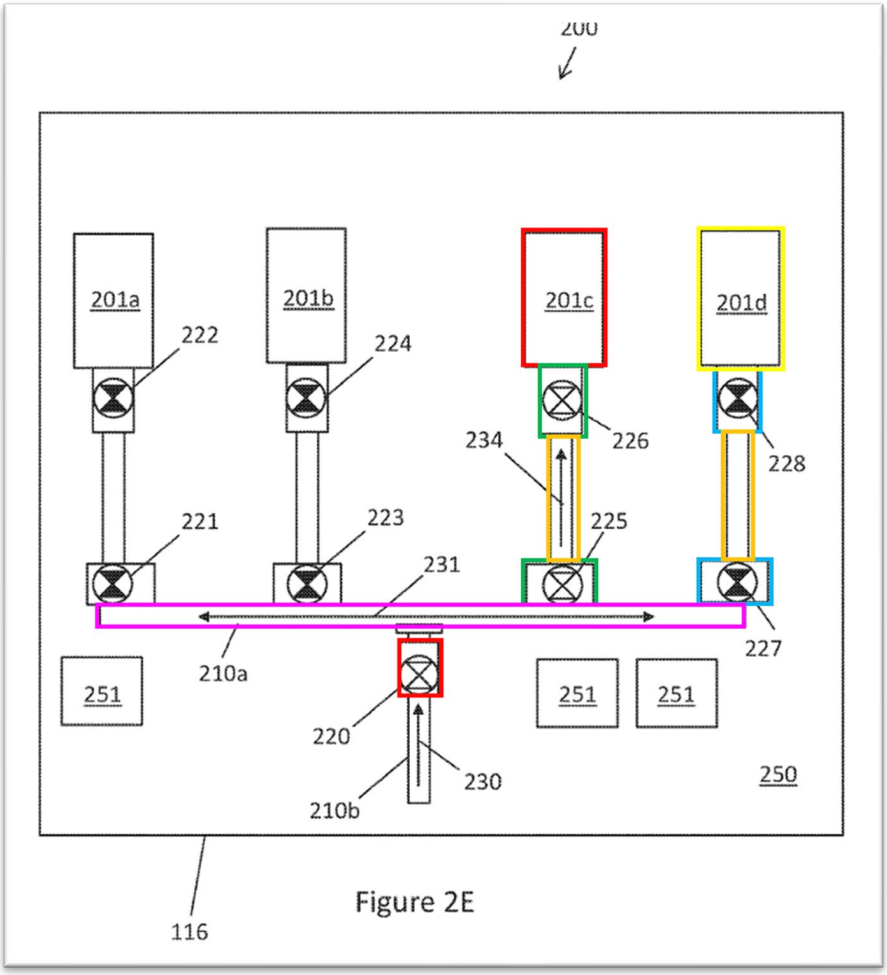

Figure 2E

139. As seen in Figure 2E, fluid is communicated to wellhead **201c** via manifold **210a** and third valve **225**. The third valve **225** is associated with both manifold **210a** and wellhead **201c**.

140. Accordingly, *Krupa* discloses the limitations of 2.1.

b. <u>2.2: "in response to determining that the fluid communicated via the manifold has satisfied the one or more conditions:"</u>

141. *Krupa* describes operations of fracturing control systems as described in Claim Limitation 2.2. *Krupa* teaches "[w]ith reference to FIGS. 2A-2G, FIGS.

2A-2G show a non-limiting example of a fracturing pump plan of a hydraulic fracturing pumping system displayed on the HMI **116**. A hydraulic fracturing pumping system **200** may include [] a third wellhead assembly **201d** of a third well, and a fourth wellhead assembly **201d** of a fourth well,"[123]

142. *Krupa* explains that sensors are used to aid in carrying out a fracturing plan, for example, by using collected data "to create real-time logging of operational metrics, such as duration between various stages" and "*to determine current job state* and provide[] choices for possible stages."[124] *Krupa* also teaches that "[a]fter hydraulic fracturing operations are conducted on the third wellhead assembly **20lc**, flush fluids may be pumped into the third wellhead assembly **201c** and the pump rate may be reduced once a total volume of the flush fluid has been pumped. As shown by FIG. 2F, the fracturing pumping plan may next open a fourth set of valves **227**, [fourth valve] **228** while the third set of valves **225**, **226** are still open."[125] This disclosure of *Krupa* describes two different "conditions" that the fluid has satisfied before the fourth valve [**227**] is open: "pump rate reduced," and "a total volume of the flush fluid has been pumped."[126] Thus, in one example, after the flowrate into

[123] Ex. 1003 at [0038].

[124] Ex. 1003 at [0026] (emphasis added).

[125] Ex. 1003 at [0045].

[126] Ex. 1003 at [0045].

the third well is reduced, and the reduced flowrate is determined to be stable, the fracturing pumping plan is moved to the next step. Accordingly, *Krupa* discloses "in response to determining that the fluid communicated via the manifold has satisfied the one or more conditions."

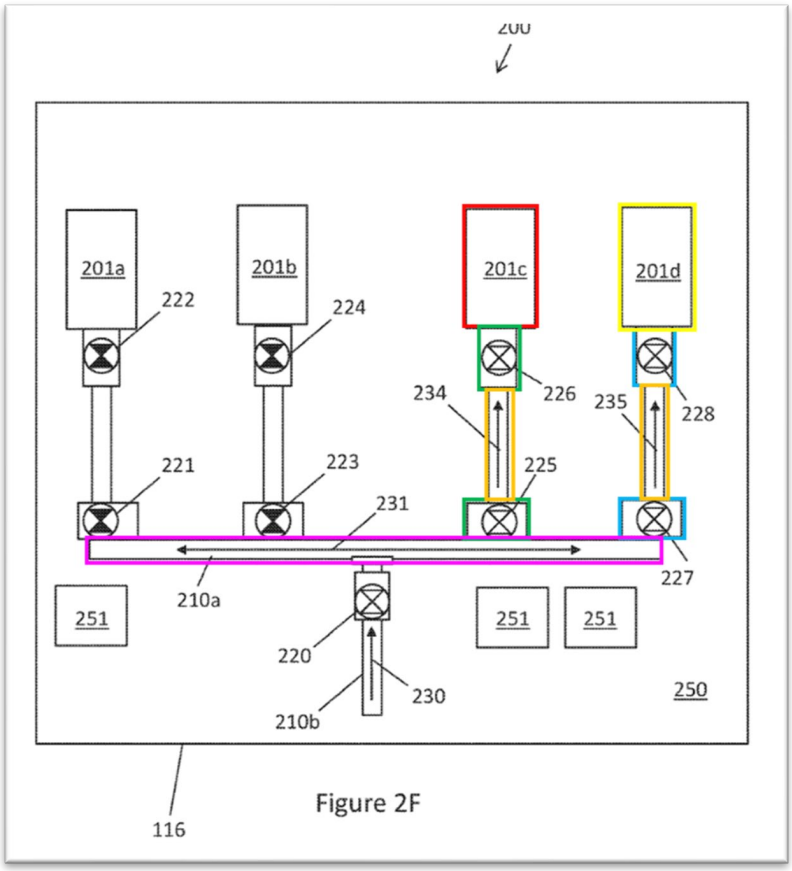

Figure 2F

143. Accordingly, *Krupa* discloses the limitations of 2.2.

c. **2.3: "opening a fourth valve;**

144. *Krupa* discloses this limitation. *Krupa* explains, "[a]s shown by FIG. 2F, the fracturing pumping plan may next open a fourth set of valves **227**, [claimed fourth valve] **228** while the third set of valves **225**, **226** are still open."[127]

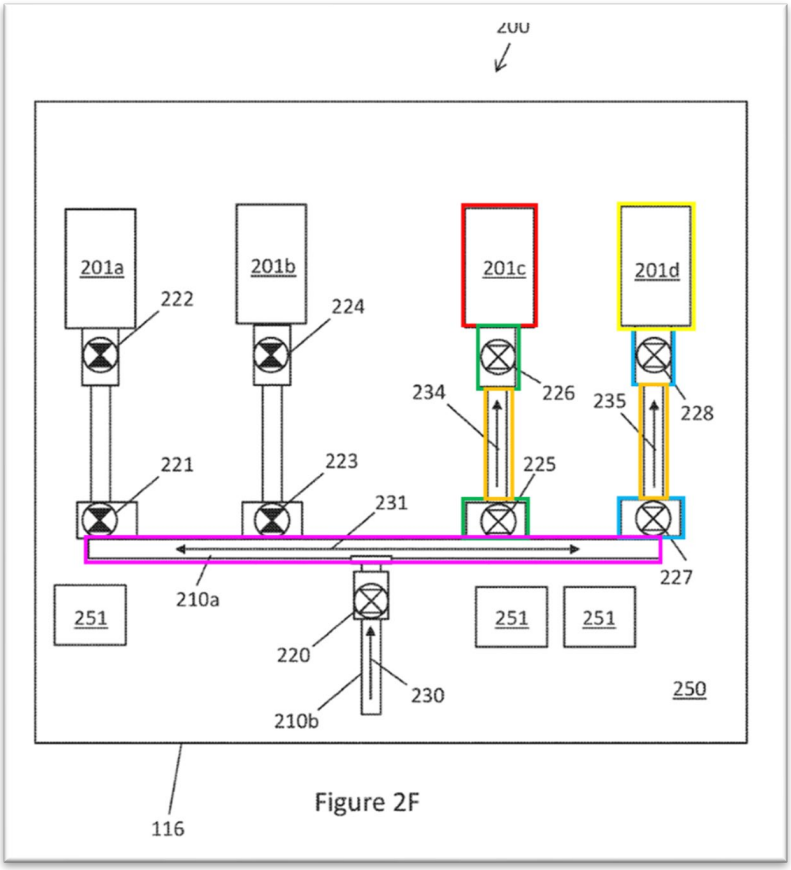

Figure 2F

145. Accordingly, *Krupa* discloses the limitations of 2.3.

[127] Ex. 1003 at [0045].

d. 2.4: "communicating fluid to a fourth well via the fourth valve; and"

146. *Krupa* discloses this limitation. *Krupa* discloses that "the flush fluid flows (see arrows **234**, **235**) into both the third wellhead assembly **201c** and the fourth wellhead assembly **201d** [associated with fourth well]"[128] Fluid is communicated to fourth well **201d** via fourth valve **227**. While Claim Limitations 2.3-2.5 do not require a specific order or timing of "communicating fluid to a fourth well via the fourth valve," *Krupa* discloses that the fluid is communicated to both the fourth well after the fourth valve is opened, before and after the third valve is opened and before and after the third valve is closed.[129]

[128] Ex. 1003 at [0045].

[129] Ex. 1003 at [0045].

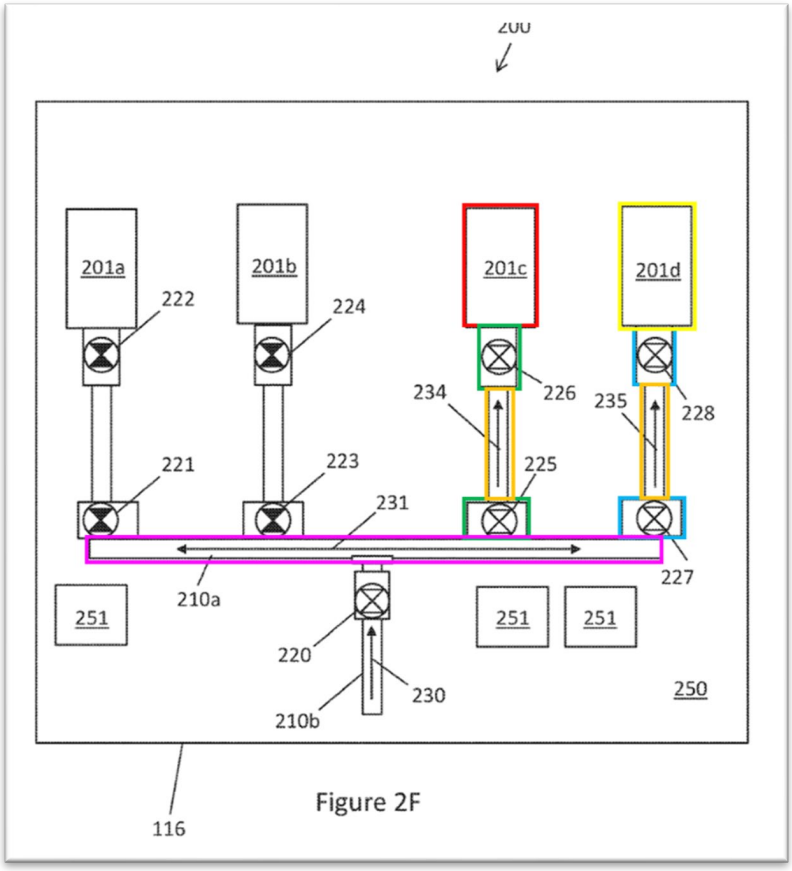

Krupa Figure 2F

147. Accordingly, *Krupa* discloses the limitations of 2.4.

e. <u>2.5: "closing the third valve after opening the fourth valve."</u>

148. *Krupa* discloses this limitation. *Krupa* teaches "[w]ith both the third set of valves **225**, **226** and the fourth set of valves **227**, **228** open, the flush fluid flows (see arrows **234**, **235**) into both the third wellhead assembly **20lc** and the fourth wellhead assembly **201d**. Once injection is established and pressure has stabilized in both the third wellhead assembly **201c** and the fourth wellhead assembly **201d**,

the third set of valves **225**, **226** may be closed remotely to shut in the third wellhead assembly **201c**, as shown by FIG. 2G."[130]

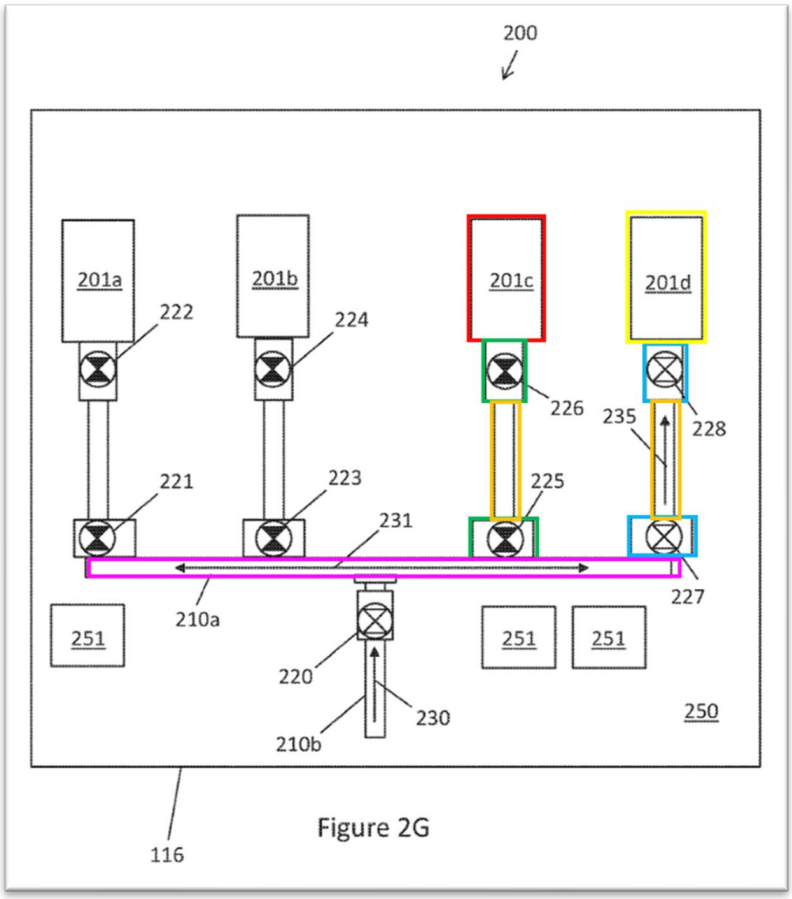

Figure 2G

149. *Krupa* discloses third valve **225** is closed after fourth valve **227** is opened.

150. Accordingly, *Krupa* discloses the limitations of 2.5.

[130] Ex. 1003 at [0045].

151. Because *Krupa* discloses each and every limitation of Claim 2, Claim 2 is anticipated by *Krupa*, or in the alternative, obvious over *Krupa* alone for the reasons discussed above.

C. DEPENDENT CLAIM 3

152. Dependent Claim 3 depends from Claim 2, which depends from Claim 1. In addition to the disclosure of the limitations of Claims 1 and 2 discussed above, *Krupa* discloses the additional limitations of Claim 3:

a. 3.1: "3. The method of claim 2, wherein: the first valve is closed after opening both the second valve and the fourth valve; and/or"

153. As discussed above regarding Claim Limitation 1.4, *Krupa* teaches closing the first valve after opening the second valve. Further, as discussed above regarding claim 2.2, *Krupa* teaches opening the fourth valve. Further, *Krupa* teaches that valve switching operations can occur in any sequence. "In one or more embodiments, FIGS. 2A-2G may provide continuous hydraulic fracturing pumping operations between the wellhead assemblies **201a-201d**. While it is noted that FIGS. 2A-2G describes the sequence of the fracturing pumping plan from the first wellhead assembly **201a** to the fourth wellhead assembly **201d**, the sequence may be conducted between any of the wellhead assemblies **201a-201d** in any order."[131] Therefore, *Krupa* discloses closing the first valve "in any order," which includes

[131] Ex. 1003 at [0046].

closing the first valve after opening both the second valve and the fourth valve as claimed.

154. Accordingly, *Krupa* discloses the limitations of 3.1. To the extent the Board determines that *Krupa* does not explicitly disclose closing the first valve after opening the second and fourth valve, such a sequence of operations would have been obvious to a POSITA based on the teachings of *Krupa* that switching sequences could be conducted "in any order."

155. Additionally, Claim Limitation 3.1 is the first prong in an "and/or" Claim. Thus, because Claim Limitation 3.1 is disclosed by *Krupa*, Claim 3 as a whole is anticipated by *Krupa*, or at least rendered obvious by *Krupa*. Further, as discussed below, *Krupa* also explicitly discloses the second prong of the "and/or" statement contained in Claim Limitation 3.2.

b. <u>3.2: "the third valve is closed after opening both the second valve and the fourth valve."</u>

156. As discussed above regarding 2.5, *Krupa* teaches closing the third valve after opening the fourth valve. In the example sequence of switching described by *Krupa*, the third set of valves is opened after the second set of valves is opened: "Referring to FIG. 2D, in one or more embodiments, the fracturing pumping plan may next open a third set of valves **225, 226** while the second set of valves **223**, **224**

are still open."[132] Later in the sequence, after the third valve is opened the third valve is closed: "[w]ith both the third set of valves **225**, **226** and the fourth set of valves **227**, **228** open, the flush fluid flows (see arrows **234**, **235**) into both the third wellhead assembly **20lc** and the fourth wellhead assembly **201d**. Once injection is established and pressure has stabilized in both the third wellhead assembly **201c** and the fourth wellhead assembly **201d**, the third set of valves **225**, **226** may be closed remotely to shut in the third wellhead assembly **201c**, as shown by FIG. 2G."[133]

157. As the third set of valves are only closed after they are opened, and the third valve is opened after the second valve is opened, and after the fourth well is opened as described above, *Krupa* discloses closing the third valve after opening both the second and fourth valves.

158. Further, as discussed above regarding claim 1.3, *Krupa* teaches opening the second valve. Further still, *Krupa* teaches that valve switching operations can occur in any sequence. "In one or more embodiments, FIGS. 2A-2G may provide continuous hydraulic fracturing pumping operations between the wellhead assemblies **201a-201d**. While it is noted that FIGS. 2A-2G describes the sequence of the fracturing pumping plan from the first wellhead assembly **201a** to the fourth wellhead assembly **201d**, the sequence may be conducted between any of the

[132] Ex. 1003 at [0044].

[133] Ex. 1003 at [0045].

wellhead assemblies **201a-201d** in any order."[134] Accordingly, *Krupa* discloses closing the first valve "in any order," which includes after opening both the second valve and the fourth valve as claimed.

159. I note that Claim 3, while requiring a sequence of valve opening, does not require any sequence of communicating fluid with respect to the various valve opening and closings. To the extent that there is a requirement for fluid flow to all three wells simultaneously, this operation would have been obvious to a POSITA in light of the teaching of *Krupa* regarding continuous pumping and that valve operations can occur in any order.

160. Therefore, *Krupa* discloses claim limitation 3.2.

161. Accordingly, because *Krupa* discloses each and every limitation of Claim 3, Claim 3 is anticipated by *Krupa*, or in the alternative, obvious over *Krupa* alone for the reasons discussed above.

D. DEPENDENT CLAIM 4

162. Dependent Claim 4 depends from Claim 1. In addition to the disclosure of the limitations of Claim 1 discussed above, *Krupa* discloses the limitations of Claim 4:

[134] Ex. 1003 at [0046].

a. 4: "4. The method of claim 1, wherein the one or more conditions include one or more flow rate conditions."

163. *Krupa* discloses this limitation, or at least renders it obvious. As discussed above regarding Claim 1.1, *Krupa* discloses pumping hydraulic fracturing fluid into the first well by opening a first valve. Further, *Krupa* discloses the use of flowmeters, including flowmeters specifically associated with the valve(s) on each wellhead. For example, *Krupa* describes "a wide variety of hydraulic fracturing equipment is used in oil and natural gas fields,"[135] and describes this equipment to include "many gauges and meters for *flow rate*, fluid density, treating pressure, etc."[136] Further, *Krupa* points out that these "plurality of sensors working in conjunction with built hydraulic fracturing system may streamline and improve efficiency[] due, in part, to reducing or eliminating human interaction with the hydraulic fracturing systems by automating fracturing operations for continuous pumping in one or more wells."[137] *Krupa* further explicitly teaches "some of the plurality of sensors **111** may be associated with each of the valves of the wellhead assembly **101**" and "the plurality of sensors **111** may be any sensor or device capable of wireline monitoring, valve monitoring, pump monitoring, flow line monitoring,

[135] Ex. 1003 at [0002].

[136] Ex. 1003 at [0002] (emphasis added); *see also* [0014].

[137] Ex. 1003 at [0016].

accumulators and energy harvesting, and equipment performance and damage."[138] Flowrate sensors, as described by *Krupa*, which are associated with the valves of the wellhead, measure fluid pumped into the well.

164. As one example of using flowrate to determine the state of the fracturing job, *Krupa* teaches pumping fracturing fluid into the well "at a full pump rate of about 50-150 bbl./min."[139] Further, *Krupa* teaches "[o]nce a total volume of the flush fluid is pumped, a pump rate may be reduced from the full pump rate. For example, the pump rate may be reduced to 5-15 bbl./min. Once a pressure has stabilized at the reduced pump rate, the software application may move the fracturing pumping plan to the next step."[140] *Krupa's* system teaches reduced flow below a flowrate threshold (i.e., 15 bbl./min), which would have been measured with at least one of the plurality of sensors disclosed by *Krupa*.

165. It was well-known to a POSITA at the time of the '770 Patent to use pump monitoring as a common form of monitoring flowrate, as the pump rate is proportional to the flowrate, as discussed above in Section IX.C. Additionally, a POSITA may be motivated to use pump monitoring because pump monitoring may

[138] Ex. 1003 at [0024]; *see also* [0028].

[139] Ex. 1003 at [0042].

[140] Ex. 1003 at [0042].

be a lower cost option for monitoring flow rate when compared with using multiple, dedicated flow meters in the system.[141]

166. *Krupa* teaches that in one embodiment once the pumping flowrate have stabilized below, for example, 15 bbl./min, the system determines that the fracturing job is at the end of that particular stage, and then "move[s] the fracturing pumping plan to the next step."[142] The next step, as discussed above regarding Claim Limitation 1.3 includes opening second valve to allow flow into the second well. Accordingly, *Krupa* discloses opening and closing valves in response to determining that the fluid communicated via the manifold has satisfied one or more flow rate conditions.

167. Therefore, *Krupa* discloses the limitations of Claim 4. To the extent that the Board finds that "flow rate" is not explicitly disclosed as a condition by *Krupa,* then such a determination would be obvious from the teachings of *Krupa* regarding measuring flow rates, a reduction in flow indicating the end of the stage, and the subsequent "move to the next step" executed by the software application. Additionally, this element would have been obvious based on the general engineering knowledge of a POSITA regarding flow rates, particularly knowledge of a rate step test (RST), or the measurement of water hammer in order to

---

[141] *See*, *e.g.*, Sections IX.C-IX.G.

[142] Ex. 1003 at [0042].

characterize fractures in the downhole formation, which is performed by reducing flowrate and measuring variations in pressure. *See* Sections IX.C–IX.G. Accordingly, Claim 4 is anticipated by *Krupa*, or in the alternative, obvious over *Krupa* alone for the reasons discussed above.

E. DEPENDENT CLAIM 5

168. Dependent Claim 5 depends from Claim 4 which depends from Claim 1. In addition to the disclosure of the limitations of Claims 1 and 4 discussed above, *Krupa* discloses the additional limitations of Claim 5:

a. 5: "5. The method of claim 4, wherein the fluid communicated via the manifold has satisfied the one or more flow rate conditions when a flow rate of the fluid is below an upper threshold, above a lower threshold, or both."

169. As discussed above regarding Claim 4, *Krupa* teaches that the "next step" (opening next set of valves) occurs after flow rate has been reduced, for example, "[o]nce a total volume of the flush fluid is pumped, a pump rate may be reduced from the full pump rate. For example, the pump rate may be reduced to 5-15 bbl./min. Once a pressure has stabilized at the reduced pump rate, the software application may move the fracturing pumping plan to the next step."[143] *Krupa's* system teaches reduced flow below an upper flowrate threshold (*i.e.*, 15 bbl./min)

[143] Ex. 1003 at [0042].

and above a lower threshold (*i.e*. 5 bbl/min) as the flow rate condition (along with other conditions) before the next step (opening valves) is initiated.

170. Accordingly, *Krupa* discloses the limitations of Claim 5.

171. To the extent that the Board finds that "flow rate" is not explicitly disclosed as a condition by *Krupa,* then such a determination would be obvious from the teachings of *Krupa* regarding measuring flow rate, a reduction in flow indicating the end of the stage, and the subsequent "move to the next step" executed by the software application. Additionally, this element would have been obvious based on the general engineering knowledge of a POSITA, particularly knowledge of a rate step test (RST), or the measurement of water hammer used to characterize fractures in the downhole formation, which is performed by reducing flowrate and measuring variations in pressure. *See* Sections IX.C – IX.G.

172. Accordingly, Claim 5 is anticipated by *Krupa*, or in the alternative, obvious over *Krupa* alone for the reasons discussed above.

F. <u>DEPENDENT CLAIM 6</u>

173. Dependent Claim 6 depends from Claim 4, which depends from Claim 1. In addition to the disclosure of the limitations of Claims 1 and 4 discussed above, *Krupa* discloses the additional limitations of Claim 6:

a. **<u>6. The method of claim 4, wherein the fluid communicated via the manifold has not satisfied the one or more flow rate conditions when a flow rate of the fluid is above an upper threshold or below a lower threshold.</u>**

174. Claim 6 essentially defines the portion excluded by Claim 5. In other words, Claim 6 merely says that if the flow rates conditions in Claim 5 are not met, then the flow rate measured "has not been satisfied." Thus, this Claim does not add anything more technically to Claim 5 other than the use of the phrase "not met." Because *Krupa* discloses meeting certain flow rate thresholds, as discussed above, *Krupa* also discloses that when the flow rate does not meet the desired threshold, whether it's above an upper threshold or lower than a lower threshold, the measured flow rate "has not satisfied the one or more flow rate conditions." Thus, for example, in *Krupa*'s system the next step (*e.g.*, opening valves) in a fracturing plan would not be initiated if the flowrate threshold conditions (*e.g.*, reduced flow below an upper flowrate threshold (i.e., 15 bbl./min) and above a lower threshold (i.e. 5 bbl/min)) are not met.[144] This is consistent with a POSITA's general engineering knowledge that pump rates are reduced before undertaken mechanical operations.[145] Moreover, this is standard practice for any flow system – if a measured flow rate is outside the required flow rate, then a flow rate condition is not met.

---

[144] Ex. 1003 at [0042].

[145] See, e.g. IX.D-G

175. In view of the above, Claim 6 is anticipated by *Krupa*, or in the alternative, obvious over *Krupa* alone for the reasons discussed above.

G. DEPENDENT CLAIM 7

176. Dependent Claim 7 depends from Claim 1. In addition to the disclosure of the limitations of Claim 1 discussed above, *Krupa* discloses the additional limitations of Claim 7:

a. 7: "7. The method of claim 1, further comprising: pumping the fluid into the manifold."

177. *Krupa* discloses this limitation. As discussed regarding Claim 1, fluid is communicated to the first well (and second well) via manifold **210a** (annotated in pink] as shown in Fig. 2B.

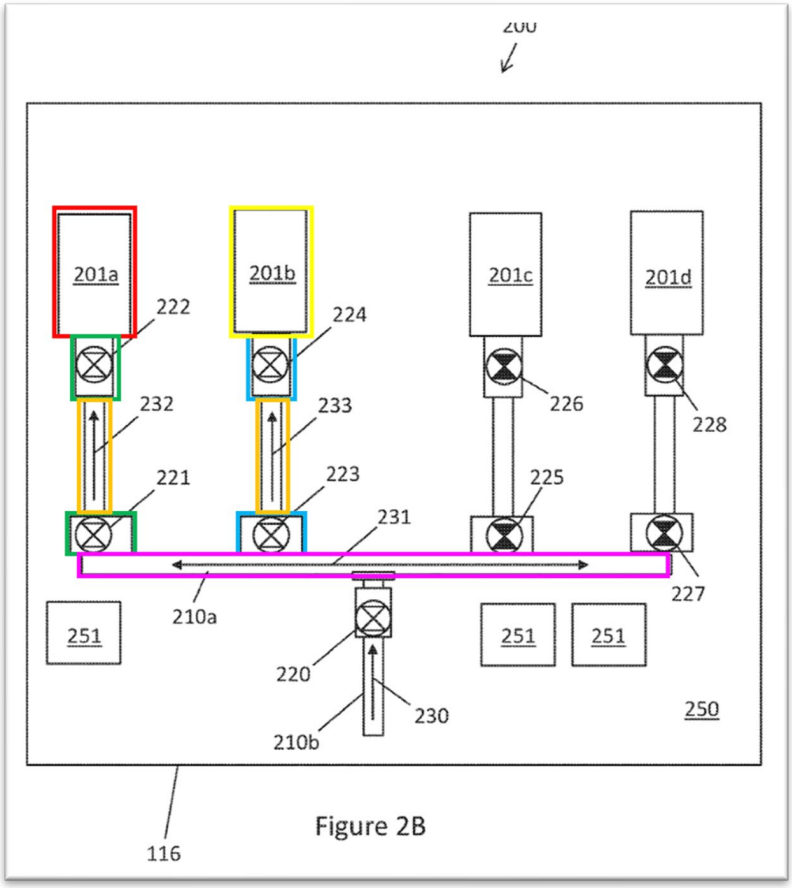

Figure 2B

178. *Krupa* further teaches that the fluid is pumped into the manifold, and accordingly into the wells. The title of *Krupa* is "System and Method for an Automated and Intelligent Frac Pumping."[146] A POSITA would have recognized "frac pumping" to refer to pumping related to hydraulic fracturing. Krupa further describes "[t]he method may include pumping fluids into a first well via at least one pump manifold by opening a first set of valves. The method may also include pumping the fluids into a second well via the at least one pump manifold while

[146] Ex. 1003 at Title.

continuously pumping the fluids into the first well by opening a second set of valves. The method further includes closing the first set of valves to stop pumping the fluids into the first well and isolating and continuously pumping the fluids into the second well."[147]

179. Accordingly, *Krupa* discloses the limitations of Claim 7, and thus Claim 7 is anticipated by *Krupa*, or in the alternative, obvious over *Krupa* alone for the reasons discussed above.

H. DEPENDENT CLAIM 8

180. Dependent Claim 8 depends from Claim 1. In addition to the disclosure of the limitations of Claim 1 discussed above, *Krupa* discloses the limitations of Claim 8:

a. 8: "8. The method of claim 1, further comprising: determining that the fluid communicated via the manifold has satisfied the one or more conditions."

181. *Krupa* discloses this limitation. The limitation is a portion of the limitation claimed in Claim Limitation 1.2. Specifically, Claim Limitation 1.2 recites "in response to determining that the fluid communicated via the manifold has satisfied one or more conditions," where Claim 8 merely recites that the "determining that the fluid communicated via the manifold has satisfied the one or more conditions" has occurred. Accordingly, *Krupa* discloses the limitations of

[147] Ex. 1003 at [0005] (emphasis added).

Claim 8 for at least the same reasons as those discussed above regarding Claim Limitation 1.2 in Section XI.A.b.

Additionally, in one example, *Krupa* describes a next stage in a fracturing operation being triggered when determined fluid conditions are met. Specifically, "[w[hen a frac stage of the first wellhead assembly … is at an end, a flush fluid may be pumped to flow … at a full pump rate, such as a rate of about 50-150 bbl/min, into the first wellhead assembly…. Once a total volume of the flush fluid is pumped, a pump rate may be reduced from the full pump rate… to 5-15 bbl/min. Once a pressure has stabilized at the reduced pump rate, the software application may move the fracturing pumping plan to the next step."[148]

182. Accordingly, *Krupa* discloses the limitations of Claim 8, and thus Claim 8 is anticipated by *Krupa*, or in the alternative, obvious over *Krupa* alone for the reasons discussed above.

I. DEPENDENT CLAIM 9

183. Dependent Claim 9 depends from Claim 8, which depends from Claim 1. In addition to the disclosure of the limitations of Claims 1 and 8 discussed above, *Krupa* discloses the additional limitations of Claim 9:

[148] Ex. 1003 at [0042].

a. **<u>9. The method of claim 8, wherein determining that the fluid communicated via the manifold has satisfied the one or more flow rate conditions comprises determining that a flow rate of the fluid is below an upper threshold, above a lower threshold, or both.</u>**

184. First, Claim 9 lacks antecedent basis for "the one or more flow rate conditions," unless Claim 1 is interpreted as limited to "one or more flow rate conditions." Nevertheless, except for depending from Claim 8, Claim 9 is identical to Claim 5 and the limitations of Claim 9 are disclosed by *Krupa* for the same reasons as those described above regarding Claim 5 in Section XI.E.

185. Accordingly, *Krupa* discloses the limitations of Claim 9, and thus Claim 9 is anticipated by *Krupa*, or in the alternative, obvious over *Krupa* alone for the reasons discussed above.

J. <u>DEPENDENT CLAIM 10</u>

186. Dependent Claim 10 depends from Claim 1. In addition to the disclosure of the limitations of Claim 1 discussed above, *Krupa* discloses the additional limitations of Claim 10:

a. **<u>10: "10. The method of claim 1, wherein the fluid communicated via the manifold is hydraulic fracturing fluid."</u>**

187. *Krupa* discloses the limitations of Claim 10. *Krupa* discloses fracturing fluid and pumping fracturing fluid through the manifold. As an example, *Krupa* discloses "[t]he method may include pumping fluids into a first well via at

least one pump manifold by opening a first set of valves. The method may also include pumping the fluids into a second well via the at least one pump manifold while continuously pumping the fluids into the first well by opening a second set of valves. The method further includes closing the first set of valves to stop pumping the fluids into the first well and isolating and continuously pumping the fluids into the second well."[149] *Kupra* also discloses that the switching "may include automating valves within the hydraulic fracturing system to have a valve sequencing (e.g. opening and closing) to direct fluids (e.g. frac fluid) in a selected path…fluids may refer to slurries, liquids, gases and/or mixtures thereof. In some embodiments, solids may be present in the fluids."[150] A POSITA would have understood the disclosure of a "frac fluid" and "slurries, liquids, gases and/or mixtures thereof", including, in some embodiments, those with solids (*e.g.*, proppants) to teach that a "fracturing fluid" is pumped through the manifold using the switching sequence disclosed and discussed above.

188. Accordingly, *Krupa* discloses the use of a fracturing fluid as claimed in Claim 10, and thus Claim 10 is anticipated by *Krupa*, or in the alternative, obvious over *Krupa* alone for the reasons discussed above.

---

[149] Ex. 1003 at [0005].

[150] Ex. 1003 at [0018].

K. DEPENDENT CLAIM 11

189. Dependent Claim 11 depends from Claim 1. In addition to the disclosure of the limitations of Claim 1 discussed above, *Krupa* discloses the additional limitations of Claim 11:

a. "11. The method of claim 1, wherein: the first valve is a first zipper valve; and/or the second valve is a second zipper valve."

190. *Krupa* discloses this limitation. A POSITA would have understood a "zipper valve" to simply be a valve used in a zipper fracturing operation, often between a discharge manifold (*e.g.*, a zipper manifold) and the wellhead. These valves would be used to swap fracturing operations from one wellhead to another as described above in Section IX.D. Zipper fracturing was well known prior to the '770 Patent. The '770 Patent contains little written description of the structure of a "zipper valve" other than indicating zipper valves may be, for example, gate valves, and communicate fluid between the zipper manifold and a well.[151] The figures of the '770 Patent show a "zipper valve" consistent with the general knowledge of a POSITA.

191. According to the '770 Patent, "[r]eferring to Figs. 2A through 2G, … the zipper valves **170a-b** (such as, for example, gate valves) operably coupled to, and adapted communicate fluid between, the zipper manifold **145** [annotated in blue]

[151] Ex. 1001 at 7:60-63, 14:9-11, 23-26, 30-34, and 43-48.

and the well **105A** [annotated in green]."[152] Fig 2A is duplicated and annotated below.

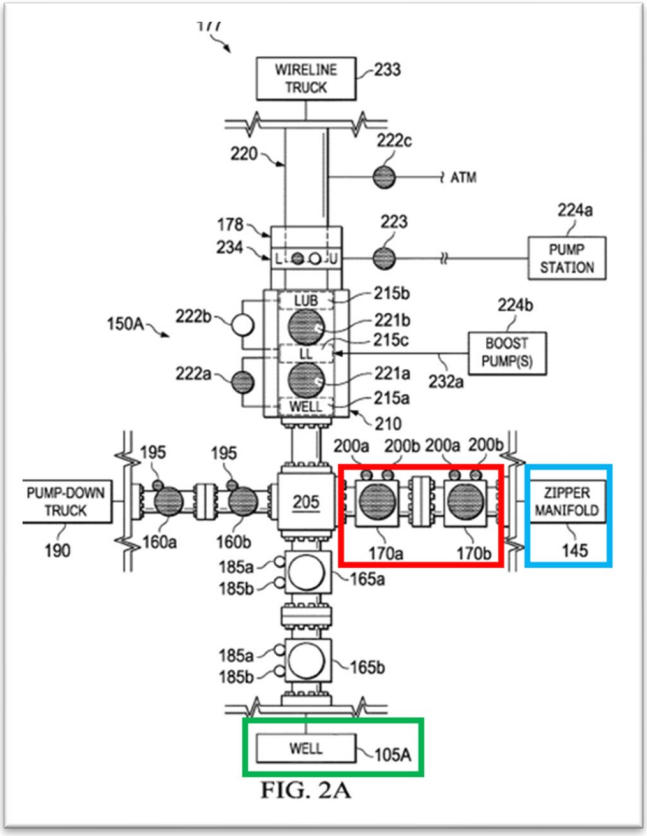

'770 Figure 2A

192. *Krupa* discloses zipper valves (e.g. **221**, **222**) in the same location and with the same function as zipper valves **170a-170b** of the '770 Patent. Fig. 1 of *Krupa* "shows an automated hydraulic fracturing pumping system according to embodiments" of the disclosure of *Krupa*. Further, "[t]he built hydraulic fracturing pumping system **100** may include at least one wellhead assembly **101** [annotated in

[152] Ex. 1001 at 7:47-8:5.

red] (e.g., a Christmas tree) coupled to at least one time and efficiency (TE) or zipper manifold **102** [annotated in blue] through one or more flow lines (not shown)."[153]

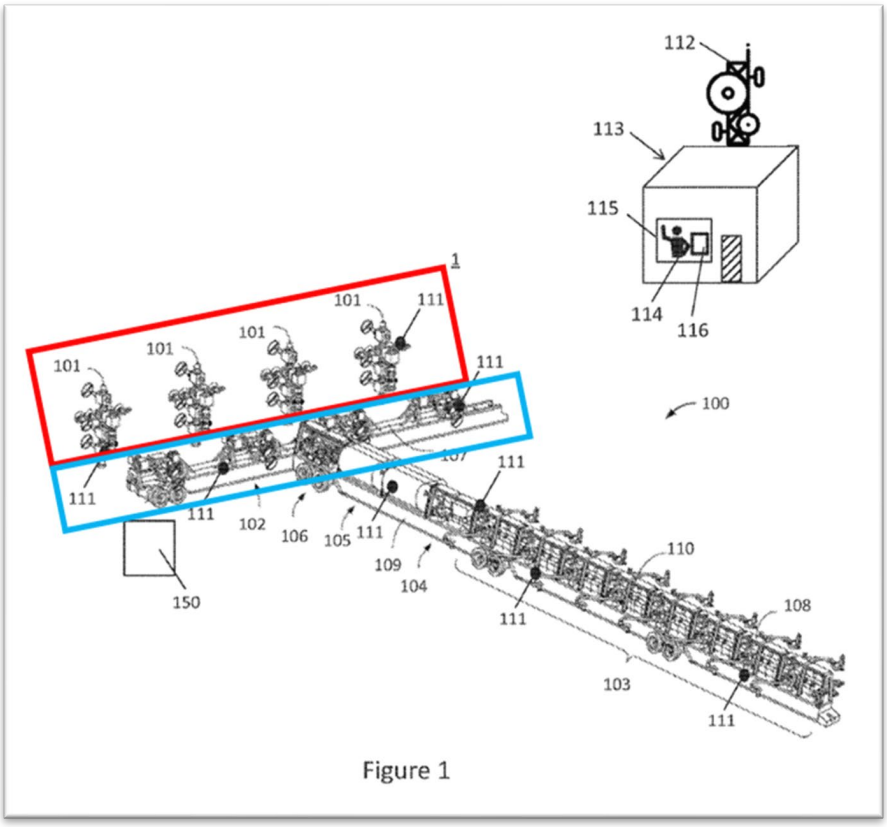

193. Further, *Krupa* discloses valves as part of the zipper manifold, and these valves are used to pump fluid to the wellhead assembly or to isolate the wellhead assembly from the pressurized fluid. "In use, the at least one pump manifold **103** may be fluidly connected to and receive pressurized fracking fluid from one or more high pressure pumps (not shown), and direct that pressurized fracking fluid to the zipper manifold **102**, which may include one or more valves that may be closed to

[153] Ex. 1003 at [0019].

isolate the wellhead assembly **101** from the flow of pressurized fluid within the zipper manifold **102** and pump manifold **103**."[154] These valves are shown in more detail in Fig. 5.

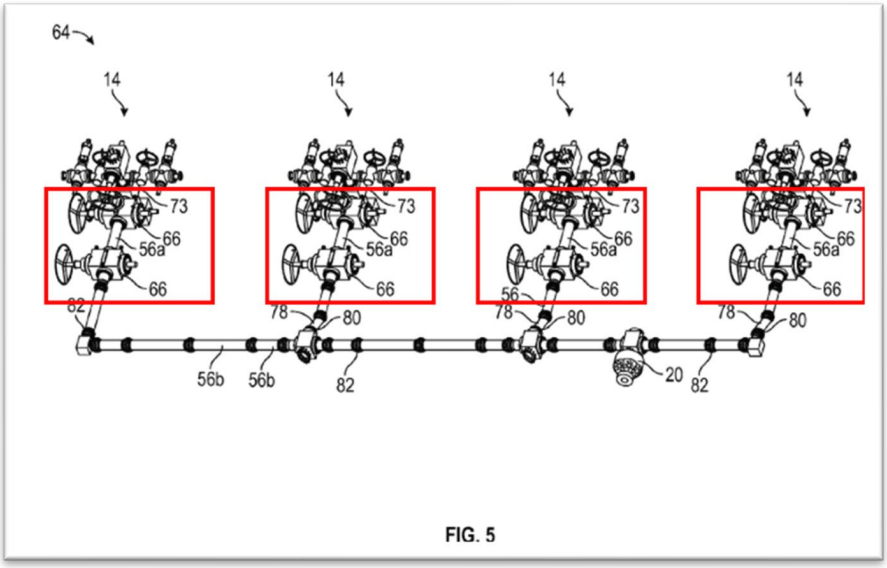

Krupa Fig. 5

194. A POSITA would have immediately recognized the valves on the zipper manifold of *Krupa* to be "zipper valves," or valves used to open or isolate a wellhead during a zipper frac operation.[155] Further, a POSITA would recognize the valves on the zipper manifold to be the valves depicted with the manifold in Figures 2A – 2G as described above regarding Claim 1, *e.g.* valves **221** and **223** shown annotated in green and blue respectively.

[154] Ex. 1003 at [0019].

[155] *See* Section IX.D.

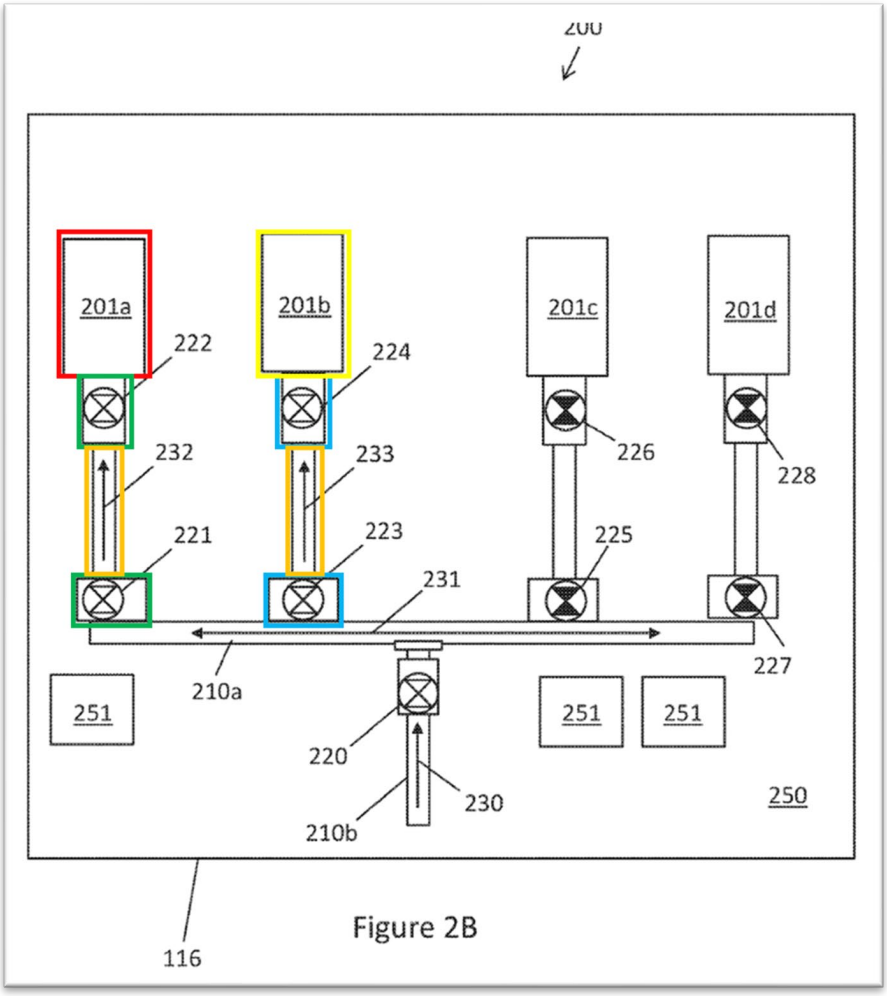

Figure 2B

195. Accordingly, *Krupa* discloses wherein each of the first and second valves is a zipper valve, as claimed in Claim 11. To the extent that the Board finds that a "zipper valve" is not explicitly disclosed by *Krupa,* then it would have been obvious to a POSITA that the valves associated with zipper manifold **102** (and associated with the wells) would have been "zipper valves," based on the teachings

of *Krupa* regarding sequential or simultaneous (i.e., zipper) fracturing operations and the general engineering knowledge of a POSITA regarding such operations.[156]

196. Accordingly, *Krupa* discloses the limitations of Claim 11, and thus Claim 11 is anticipated by *Krupa*, or in the alternative, obvious over *Krupa* alone for the reasons discussed above.

L. DEPENDENT CLAIM 12

197. Dependent Claim 12 depends from Claim 1. In addition to the disclosure of the limitations of Claim 1 discussed above, *Krupa* discloses the additional limitations of Claim 12:

a. 12.1: "12. The method of claim 1, wherein the second valve is associated with both the manifold and the second well; and"

198. *Krupa* discloses, with references to FIGS. 2A – 2G, "FIGS. 2A-2G show a non-limiting example of a fracturing pump plan of a hydraulic fracturing pumping system." Further, *Krupa* teaches "[a] hydraulic fracturing system **200** may include a first wellhead assembly **201a** of a first well [annotated in red], [and] a second wellhead assembly **201b** of a second well. [annotated in yellow]".[157] Further, *Krupa* teaches "a manifold connection **210a** [annotated in pink] may fluidly couple each wellhead assembly **201a-201d** to a primary manifold connection **210b**

[156] *See*, *e.g.*, Sections IX.C-IX.E.

[157] Ex. 1003 at [0038].

[annotated in maroon] of a pump manifold."[158] *Krupa* further teaches, with regard to the manifolds "a main valve **220** may be open to allow fluid flow (see arrow 230) from the primary manifold connection **210b** to the manifold connection **210a**."[159] Figure 2B is shown as an example.

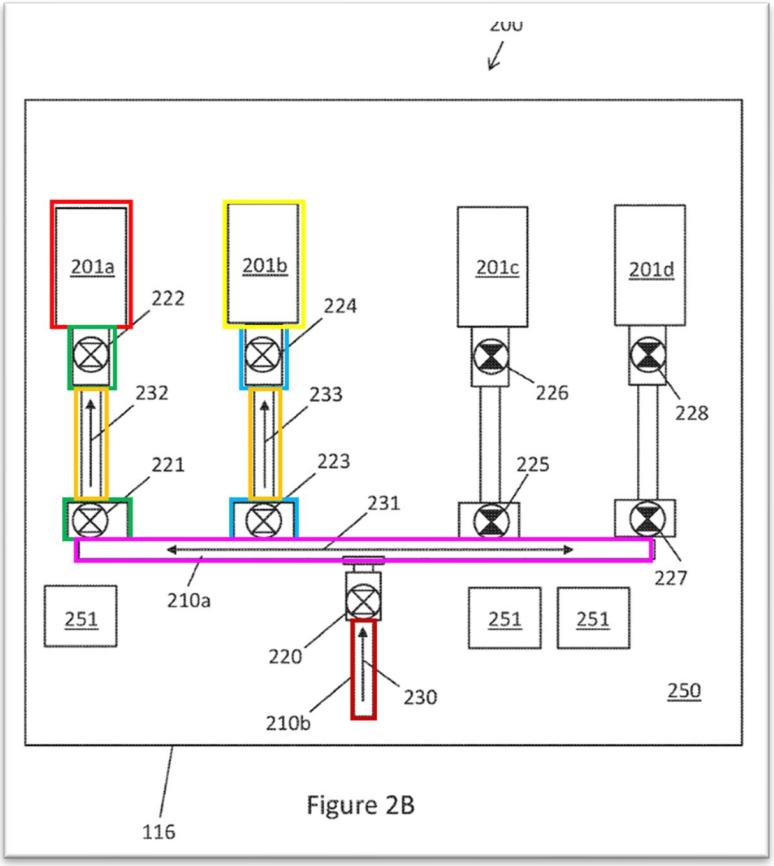

Figure 2B

199. Further, *Krupa* discloses "With both the first set of valves **221, 222** and the second set of valves **223,** [second valve] **224** open, the flush fluid flows (see arrows **232, 233**) into both the first wellhead assembly **201a** and the second wellhead

[158] Ex. 1003 at [0038].

[159] Ex 1003 [0040]

assembly **201b**. [associated with second well]"[160] As shown in Fig, 2B shown above, the "second valve" (valve **223**) is associated with both the manifold **210a** and the wellhead **201b** (and associated second well.)

200. Accordingly, *Krupa* discloses Limitation 12.1.

b. <u>12.2: "wherein communicating fluid to the second well via the second valve comprises communicating fluid to the second well via the manifold and the second valve."</u>

201. *Krupa* discloses this limitation. *Krupa* teaches "[t]he method may also include pumping the fluids into a second well via the at least one pump manifold while continuously pumping the fluids into the first well *by opening a second set of valves* [claimed second valve]."[161]

202. As discussed above regarding 12.1, *Krupa* teaches "[a] hydraulic fracturing system **200** may include a first wellhead assembly **201a** of a first well [annotated in red], [and] a second wellhead assembly **201b** of a second well. [annotated in yellow]."[162] Further, *Krupa* teaches "a manifold connection **210a** [annotated in pink] may fluidly couple each wellhead assembly **201a-201d** to a primary manifold connection **210b** [annotated in maroon] of a pump manifold."[163] *Krupa* further teaches, with regard to the manifolds "a main valve **220** may be open

---

[160] Ex. 1003 at [0042].

[161] Ex. 1003 at [0005] (emphasis added).

[162] Ex. 1003 at [0038].

[163] Ex. 1003 at [0038].

to allow fluid flow (see arrow 230) from the primary manifold connection **210b** to the manifold connection **210a**."[164] Figure 2B is shown as an example.

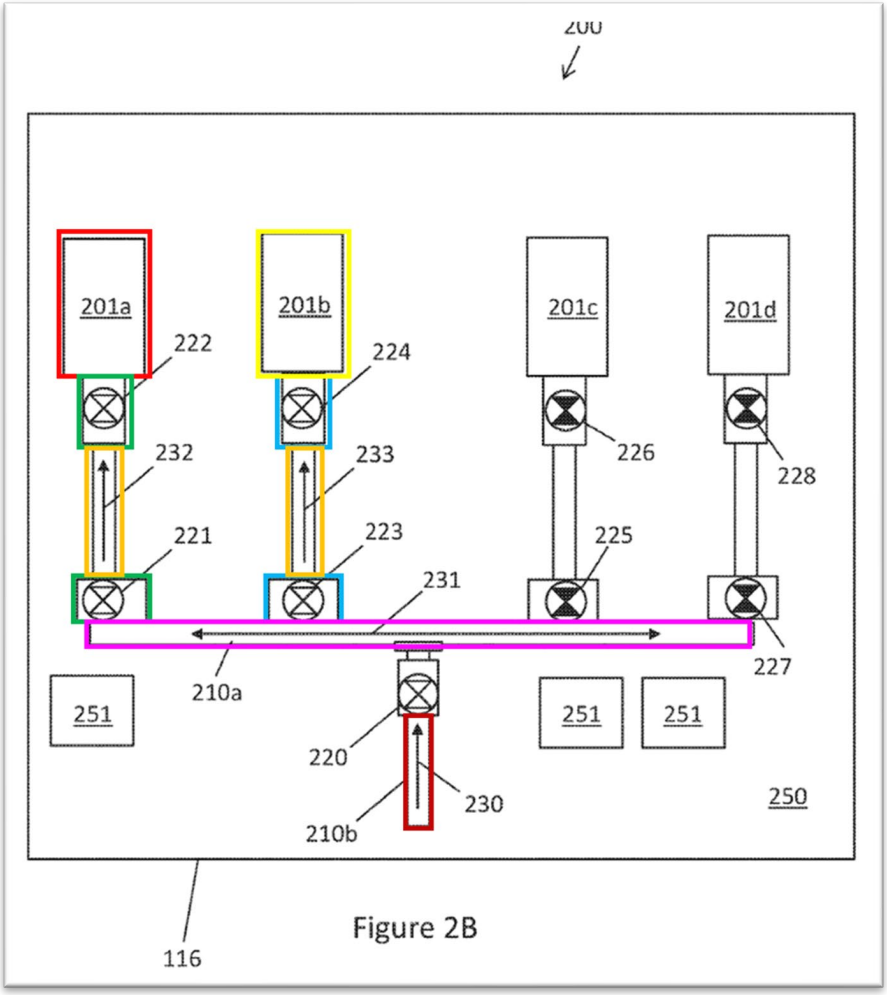

Figure 2B

203. Further, *Krupa* discloses "With both the first set of valves **221, 222** and the second set of valves **223, [second valve] 224** open, the flush fluid flows (see arrows **232, 233**) into both the first wellhead assembly **201a** and the second wellhead

[164] Ex. 1003 at [0040].

assembly **201b**. [associated with second well]"[165] As shown in Fig, 2B shown above, the "second valve" (valve 223) is associated with both the manifold **210a** and the wellhead **201b** (and associated second well.) Further, following the flow arrows fluid flow comes from the pump via flow **230**, then through **231** which is associated with manifold **210** and then flow **233** into wellhead **201b** (and second well). Accordingly, fluid flows into the second well via second valve **223** and manifold **210a**.

204. Accordingly, *Krupa* discloses Claim Limitation 12.2.

205. Because *Krupa* discloses each and every limitation of Claim 12, *Krupa* discloses the limitations of Claim 12, and thus Claim 12 is anticipated by Krupa, or in the alternative, obvious over Krupa alone for the reasons discussed above.

M. DEPENDENT CLAIM 13

206. Dependent Claim 13 depends from Claim 12, which depends from Claim 1. In addition to the disclosure of the limitations of Claims 1 and 12 discussed above, *Krupa* discloses the additional limitations of Claim 13:

a. " 13. The method of claim 12, wherein the fluid communicated via the manifold is hydraulic fracturing fluid."

207. With the exception of depending from Claim 12, the limitation of Claim 13 is identical to that of Claim 10. Accordingly, *Krupa* discloses the limitations of

[165] Ex. 1003 at [0042].

Claim 13 for the same reasons as those discussed regarding Claim 10 in Section XI.J above.

N. INDEPENDENT CLAIM 14

208. It is my opinion that *Krupa* discloses, or at least renders obvious, Claim 14 of the '770 Patent. Details regarding the specific disclosures of *Krupa* are contained in the subsections following. To the extent the Board determines that *Krupa* does not explicitly disclose the limitations of Claim 14, a POSITA would have found Claim 14 to be obvious in light of the disclosure and teachings of *Krupa*.

a. 14.1 : "An apparatus comprising: a non-transitory computer readable medium; and a plurality of instructions stored on the non-transitory computer readable medium and executable by one or more processors, wherein, when the instructions are executed by the one or more processors, the following steps are executed:"

209. *Krupa* discloses "An automated hydraulic fracturing system may include a computing system for implementing methods disclosed herein."[166] *Krupa*'s computing system is an example of the apparatus as described in Claim 14.

210. Specifically, *Krupa* discloses "[s]oftware instructions in the form of computer readable program code to perform embodiments of the disclosure may be stored, in whole or in part, temporarily or permanently, *on a non-transitory computer readable medium such as a CD, DVD, storage device, a diskette, a tape, flash*

[166] Ex. 1003 at [0027].

memory, physical memory, or any other computer readable storage medium."[167] The description in *Krupa* matches the claimed "non-transitory computer readable medium" of Limitation 14.1.

211. Further, *Krupa* describes that the software instructions *"may correspond to computer readable program code, that when executed by a processor(s), may perform one or any of the* automated hydraulic fracturing systems features described herein, including that associated with data interpretation and automated hydraulic fracturing pumping systems."[168]

212. A POSITA would have immediately equated the "software instructions" of *Krupa* to the claimed "plurality of instructions." A POSITA would have also immediately recognized the "computer readable code, that when executed by a processor(s)" of *Krupa* to be a disclosure of the instructions are "executable by one or more processors," as claimed. Additionally, a POSITA would have immediately equated the disclosure of "that when executed by a processor(s), may perform one or any of the automated hydraulic fracturing systems features described herein" (and discussed with respect to Limitations 14.2-14.5 below) to the claimed "when the instructions are executed by the one or more processors, the following steps are executed."

---

[167] Ex. 1003 at [0032] (emphasis added).

[168] Ex. 1003 at [0032] (emphasis added).

213. Accordingly, *Krupa* discloses Limitation 14.1.

b. <u>14.2: "communicating fluid to a first well via a manifold and a first valve, the first valve being associated with both the manifold and the first well; and"</u>

214. Limitation 14.2 is identical to Limitation 1.1 discussed above. Thus, Limitation 14.2 is disclosed by *Krupa* at least for the same reasons as those discussed above regarding 1.1 in Section XI.A.a.

c. <u>14.3: "in response to determining that the fluid communicated via the manifold has satisfied one or more conditions:"</u>

215. Limitation 14.3 is identical to Limitation 1.2 discussed above. Thus, Limitation 14.3 is disclosed by *Krupa* at least for the same reasons as those discussed above regarding 1.2 in Section XI.A.b.

d. <u>14.4: "opening a second valve; communicating fluid to a second well via the second valve; and"</u>

216. Limitation 14.4 is identical to Limitation 1.3 discussed above. Thus, Limitation 14.4 is disclosed by *Krupa* at least for the same reasons as those discussed above regarding 1.3 in Section XI.A.c.

e. <u>14.5: "closing the first valve after opening the second valve."</u>

217. Limitation 14.5 is identical to Limitation 1.4 discussed above. Thus, Limitation 14.5 is disclosed by *Krupa* at least for the same reasons as those discussed above regarding 1.4 in Section XI.A.d.

218. In view of the above, Krupa discloses an apparatus that includes a non-transitory computer readable medium, and a plurality of instructions stored on the non-transitory computer readable medium and executable by one or more processors, wherein, when the instructions are executed by the one or more processors, the steps of Claim Limitations 14.2-14.5 (which are the same as the steps of Claim 1) are executed.

219. Because *Krupa* discloses each and every element of Claim 14, Claim 14 is anticipated by *Krupa*. To the extent that the Board finds Claim 14 is not anticipated by *Krupa*, Claim 14 is obvious over *Krupa* alone for the reasons discussed above.

O. DEPENDENT CLAIM 15

220. Dependent Claim 15 depends from Claim 14. In addition to the disclosure of the limitations of Claim 14 discussed above, *Krupa* discloses the additional limitations of Claim 15:

a. **15.1: "15. The apparatus of claim 14, wherein, when the instructions are executed by the one or more processors, the following steps are also executed: communicating fluid to a third well via the manifold and a third valve, the third valve being associated with both the manifold and the third well; and"**

221. With the exception of being an apparatus claim and depending from Claim 14, which merely claims a computer implements/executes the steps, Limitation 15.1 is substantially similar to those of 2.1 discussed above. Further,

Krupa specifically discloses that "software instructions may correspond to computer readable program code, that when executed by a processor(s), may perform one or any" of the "automated hydraulic fracturing systems features…including that associated with data interpretation and automated hydraulic fracturing pumping systems."[169] Thus, the limitations of 15.1 are disclosed by *Krupa* for the reasons discussed here and at least for the same reasons as those above regarding Claim Limitation 2.1 in Section XI.B.a.

b. <u>15.2: "in response to determining that the fluid communicated via the manifold has satisfied the one or more conditions:"</u>

222. With the exception of being an apparatus claim and depending from Claim 14, the limitations of 15.2 are identical to those of 2.2 discussed above. Thus, the limitations of 15.2 are disclosed by *Krupa* at least for the same reasons as those discussed above regarding 2.2 in Section XI.B.b.

c. <u>15.3-15.4: "opening a fourth valve; communicating fluid to a fourth well via the fourth valve; and"</u>

223. With the exception of being an apparatus claim and depending from Claim 14, the limitations of 15.3-15.4 are identical to those of Claim Limitations 2.3 and 2.4 discussed above. Thus, the limitations of 15.3-15.4 are disclosed by *Krupa*

[169] Ex. 1003 at [0032].

at least for the same reasons as those discussed above regarding 2.3 and 2.4 in Sections XI.B.c and XI.B.d.

d. 15.5: "closing the third valve after opening the fourth valve."

224. With the exception of being an apparatus claim and depending from Claim 14, the limitations of 15.5 are identical to those of 2.5 discussed above. Thus, the limitations of 15.5 are disclosed by *Krupa* at least for the same reasons as those discussed above regarding 2.5 in Section XI.B.e.

225. Accordingly, *Krupa* discloses the limitations of Claim 15, and thus Claim 15 is anticipated by Krupa, or in the alternative, is obvious over Krupa alone for the reasons discussed above.

P. DEPENDENT CLAIM 16

226. Dependent Claim 16 depends from Claim 15, which depends from Claim 14. In addition to the disclosure of the limitations of Claims 14 and 15 discussed above, *Krupa* discloses the additional limitations of Claim 16:

a. 16.1: "16. The apparatus of claim 15, wherein: the first valve is closed after opening both the second valve and the fourth valve; and/or"

227. With the exception of being an apparatus claim and depending from Claim 15, the limitations of 16.1 are identical to those of 3.1 discussed above. Thus, the limitations of 16.1 are disclosed by *Krupa* at least for the same reasons as those discussed above regarding 3.1 in Section XI.C.a.

b. <u>16.2: "the third valve is closed after opening both the second valve and the fourth valve."</u>

228. With the exception of being an apparatus claim and depending from Claims 14 and 15, the limitations of 16.2 are identical to those of 3.2 discussed above. Thus, the limitations of 16.2 are disclosed by *Krupa* at least for the same reasons as those discussed above regarding 3.2 in Section XI.C.b.

229. Accordingly, *Krupa* discloses the limitations of Claim 16, and thus Claim 16 is anticipated by Krupa, or in the alternative, obvious over Krupa alone for the reasons discussed above.

Q. <u>DEPENDENT CLAIM 17</u>

230. Dependent Claim 17 depends from Claim 14. In addition to the disclosure of the limitations of Claim 14 discussed above, *Krupa* discloses the limitations of Claim 17:

a. <u>17. The apparatus of claim 14, wherein the one or more conditions include one or more flow rate conditions.</u>

231. With the exception of being an apparatus claim and depending from Claim 14, the limitations of Claim 17 are identical to those of Claim 4 discussed above. Thus, the limitations of Claim 17 are disclosed by *Krupa* at least for the same reasons as those discussed above regarding Claim 4 in Section XI.D. Accordingly, Claim 17 is anticipated by Krupa, or in the alternative, obvious over Krupa alone for the reasons discussed above.

R. DEPENDENT CLAIM 18

232. Dependent Claim 18 depends from Claim 17, which depends from Claim 14. In addition to the disclosure of the limitations of Claims 14 and 17 discussed above, *Krupa* discloses the limitations of Claim 18:

> **a. 18. The apparatus of claim 17, wherein the fluid communicated via the manifold has satisfied the one or more flow rate conditions when a flow rate of the fluid is below an upper threshold, above a lower threshold, or both.**

233. With the exception of being an apparatus claim and depending from Claim 17, the limitations of Claim 18 are identical to those of Claim 5 discussed above. Thus, the limitations of Claim 18 are disclosed by *Krupa* at least for the same reasons as those discussed above regarding Claim 5 in Section XI.E. Accordingly, Claim 18 is anticipated by Krupa, or in the alternative, obvious over Krupa alone for the reasons discussed above.

S. DEPENDENT CLAIM 19

234. Dependent Claim 19 depends from Claim 17, which depends from claim 14. In addition to the disclosure of the limitations of Claims 14 and 17 discussed above, *Krupa* discloses the limitations of Claim 19:

a. **19. The apparatus of claim 17, wherein the fluid communicated via the manifold has not satisfied the one or more flow rate conditions when a flow rate of the fluid is above an upper threshold or below a lower threshold.**

235. With the exception of being an apparatus claim and depending from Claim 17, the limitations of Claim 19 are identical to those of Claim 6 discussed above. Thus, the limitations of Claim 19 are disclosed by *Krupa* at least for the same reasons as those discussed above regarding Claim 6 in Section XI.F. Accordingly, Claim 19 is anticipated by Krupa, or in the alternative, obvious over Krupa alone for the reasons discussed above.

T. DEPENDENT CLAIM 20

236. Dependent Claim 20 depends from Claim 14. In addition to the disclosure of the limitations of Claim 14 discussed above, *Krupa* discloses the additional limitations of Claim 20:

a. **20. The apparatus of claim 14, wherein, when the instructions are executed by the one or more processors, the following step is also executed: pumping the fluid into the manifold.**

237. With the exception of being an apparatus claim and depending from Claim 14, the limitations of Claim 20 are identical to those of Claim 7 discussed above. Further, *Krupa* specifically discloses that "software instructions may correspond to computer readable program code, that when executed by a processor(s), may perform one or any" of the "automated hydraulic fracturing

systems features…including that associated with data interpretation and automated hydraulic fracturing pumping systems."[170] Thus, the limitations of Claim 20 are disclosed by *Krupa* as discussed here and for at least for the same reasons as those discussed above regarding Claim 7 in Section XI.G. Accordingly, Claim 20 is anticipated by Krupa, or in the alternative, obvious over Krupa alone for the reasons discussed above.

U. DEPENDENT CLAIM 21

238. Dependent Claim 21 depends from Claim 14. In addition to the disclosure of the limitations of Claim 14 discussed above, *Krupa* discloses the additional limitations of Claim 21:

> **a. 21. The apparatus of claim 14, wherein, when the instructions are executed by the one or more processors, the following step is also executed: determining that the fluid communicated via the manifold has satisfied the one or more conditions.**

239. With the exception of being an apparatus claim and depending from Claim 14, the limitations of Claim 21 are identical to those of Claim 8 discussed above. Further, *Krupa* specifically discloses that "software instructions may correspond to computer readable program code, that when executed by a processor(s), may perform one or any" of the "automated hydraulic fracturing systems features…including that associated with data interpretation and automated

[170] Ex. 1003 at [0032].

hydraulic fracturing pumping systems."[171] Thus, the limitations of Claim 21 are disclosed by *Krupa* as discussed here and for at least for the same reasons as those discussed above regarding Claim 8 in Section XI.H. Accordingly, Claim 21 is anticipated by Krupa, or in the alternative, obvious over Krupa alone for the reasons discussed above.

V. DEPENDENT CLAIM 22

240. Dependent Claim 22 depends from Claim 21, which depends from Claim 14. In addition to the disclosure of the limitations of Claims 14 and 21 discussed above, *Krupa* discloses the additional limitations of Claim 22:

a. **22. The apparatus of claim 21, wherein determining that the fluid communicated via the manifold has satisfied the one or more flow rate conditions comprises determining that a flow rate of the fluid is below an upper threshold, above a lower threshold, or both.**

241. With the exception of being an apparatus claim and depending from Claim 21, the limitations of Claim 22 are identical to those of Claim 9 discussed above. Thus, the limitations of Claim 22 are disclosed by *Krupa* at least for the same reasons as those discussed above regarding Claim 9 in Section XI.I. Accordingly, Claim 22 is anticipated by Krupa, or in the alternative, obvious over Krupa alone for the reasons discussed above.

[171] Ex. 1003 at [0032].

W. DEPENDENT CLAIM 23

242. Dependent Claim 23 depends from Claim 14. In addition to the disclosure of the limitations of Claim 14 discussed above, *Krupa* discloses the additional limitations of Claim 23:

a. 23. The apparatus of claim 14, wherein the fluid communicated via the manifold is hydraulic fracturing fluid.

243. With the exception of being an apparatus claim and depending from Claim 14, the limitations of Claim 23 are identical to those of Claim 10 discussed above. Thus, the limitations of Claim 23 are disclosed by *Krupa* at least for the same reasons as those discussed above regarding Claim 10 in Section XI.J. Accordingly, Claim 23 is anticipated by Krupa, or in the alternative, obvious over Krupa alone for the reasons discussed above.

X. DEPENDENT CLAIM 24

244. Dependent Claim 24 depends from Claim 14. In addition to the disclosure of the limitations of Claim 14 discussed above, *Krupa* discloses the additional limitations of Claim 24:

a. 24. The apparatus of claim 14, wherein: the first valve is a first zipper valve; and/or the second valve is a second zipper valve.

245. With the exception of being an apparatus claim and depending from Claim 14, the limitations of Claim 24 are identical to those of Claim 11 discussed

above. Thus, the limitations of Claim 24 are disclosed by *Krupa* at least for the same reasons as those discussed above regarding Claim 11 in Section XI.K. Accordingly, Claim 24 is anticipated by *Krupa*, or in the alternative, obvious over *Krupa* alone for the reasons discussed above.

Y. DEPENDENT CLAIM 25

246. Dependent Claim 25 depends from Claim 14. In addition to the disclosure of the limitations of Claim 14 discussed above, *Krupa* discloses the additional limitations of Claim 25:

a. 25.1: "25. The apparatus of claim 14, wherein the second valve is associated with both the manifold and the second well; and"

247. With the exception of being an apparatus claim and depending from Claim 14, Limitation 25.1 is identical to Limitation 12.1 discussed above. Thus, Limitation 25.1 is disclosed by *Krupa* at least for the same reasons as those discussed above regarding 12.1 in Section XI.L.a.

b. 25.2: "wherein communicating fluid to the second well via the second valve comprises communicating fluid to the second well via the manifold and the second valve."

248. With the exception of being an apparatus claim and depending from Claim 14, Limitation 25.2 is identical to Limitation 12.2 discussed above. Thus, Limitation 25.2 is disclosed by *Krupa* at least for the same reasons as those discussed above regarding 12.2 in Section XI.L.b.

249. Accordingly, *Krupa* discloses the limitations of Claim 25, and thus Claim 25 is anticipated by Krupa, or in the alternative, obvious over Krupa alone for the reasons discussed above.

Z. DEPENDENT CLAIM 26

250. Dependent Claim 26 depends from Claim 25, which depends from claim 14. In addition to the disclosure of the limitations of Claims 14 and 25 discussed above, *Krupa* discloses the additional limitations of Claim 26:

a. 26. The apparatus of claim 25, wherein the fluid communicated via the manifold is hydraulic fracturing fluid."

251. With the exception of being an apparatus claim and depending from Claims 25 and 14, the limitations of Claim 26 are identical to those of Claim 13 discussed above. Thus, Claim 26 is disclosed by *Krupa* at least for the same reasons as those discussed above regarding Claim 13 in Section XI.M. Thus, Claim 26 is anticipated by Krupa, or in the alternative, obvious over Krupa alone for the reasons discussed above.

AA. INDEPENDENT CLAIM 27

252. It is my opinion that *Krupa* anticipates, or at least renders obvious, Claim 27 of the '770 Patent. Details regarding the specific disclosures of *Krupa* are contained in the subsections following. To the extent the Board determines that *Krupa* does not explicitly disclose the limitations of Claim 27, a POSITA would

have found the pumping and switching arrangement of Claim 27 to be obvious in light of the disclosure and teachings of *Krupa*.

a. <u>27.1: "1. A system, comprising: a first valve via which fluid is communicated from a manifold to a first well"</u>

253. *Krupa* discloses this limitation. *Krupa* discloses a system for hydraulically fracturing a plurality of wells. The title of *Krupa* is "System and Method for an Automated and Intelligent Frac Pumping".[172] A POSITA would have recognized "frac pumping" to refer to pumping related to hydraulic fracturing.

254. *Krupa* describes "a system with a build hydraulic fracturing system having a plurality of devices connected together and in fluid communication with one or more wells."[173] *Krupa* also discloses the use of a fracturing plan which "may include instructions to perform at least one continuous pumping operations for the one or more wells. The instructions may include a sequence of valve operations to direct fluid flow through a selected path into the one or more wells."[174] Further, in one embodiment, the system "may include pumping fluids into a first well via at least one pump manifold by opening a first set of valves".[175] A POSITA would have understood this to disclose Claim Limitation 27.1.

---

[172] Ex. 1003 at Title.

[173] Ex. 1003 at [0007].

[174] Ex 1003 at [0007].

[175] Ex 1003 at [0005].

255. Accordingly, *Krupa* discloses claim limitation 27.1.

b. <u>27.2: "a second valve via which fluid is adapted to be communicated to a second well; and"</u>

256. *Krupa* discloses this limitation. *Krupa* teaches one embodiment "may also include pumping the fluids into a second well via the at least one pump manifold while continuously pumping the fluids into the first well by opening a second set of valves."[176] A POSITA would have understood this to disclose Claim Limitation 27.2. FIG. 2B of *Krupa* shows second valves **223**/**224** that, when open, allow for fluid to be communicated to a second well **201b**.[177]

257. Accordingly, *Krupa* discloses the limitations of 27.2.

c. <u>27.3: "one or more controllers, configured to:</u>

258. *Krupa* discloses this limitation. *Krupa* teaches a controller "The auxiliary manifold **104** may provide a universal power and control unit, including a power unit and a primary controller of the hydraulic fracturing system".[178] Further, *Krupa* teaches "automatic hydraulic fracturing pumping system [which] may include automating valves within the hydraulic fracturing system to have a valve sequencing (e.g. opening and closing) to direct fluids (e.g. frac fluid) in a selected path."[179]

---

[176] Ex. 1003 at [0005].

[177] Ex. 1003 at [0005], [0043].

[178] Ex. 1003 at [0022].

[179] Ex. 1003 at [0018].

Further still *Krupa* teaches "the built hydraulic fracturing pumping system **100** may include a system **150** that may provide power to actuate the valves…The system **150** may also be interchangeably referred to as a valve control system in the present disclosure."[180] A POSITA would have understood any of the references above to disclose a controller.

259. Thus, *Krupa* discloses the limitations of 27.3.

d. <u>27.4: "open the second valve to thereby communicate fluid to the second well via the second valve; and"</u>

260. As discussed above regarding 27.2, *Krupa* discloses "pumping the fluids into a second well via the at least one pump manifold while continuously pumping the fluids into the first well by opening a second set of valves."[181] A POSITA would have recognized this as disclosing the limitations of 27.4.

261. Accordingly, *Krupa* discloses the limitation of 27.4.

e. <u>27.5: "close the first valve after opening the second valve,"</u>

262. *Krupa* discloses this limitation. *Krupa* teaches "pumping the fluids into a second well via the at least one pump manifold while continuously pumping the fluids into the first well by opening a second set of valves. The method further includes closing the first set of valves to stop pumping the fluids into the first well

[180] Ex. 1003 at [0021].

[181] Ex. 1003 at [0005].

and isolating and continuously pumping the fluids into the second well."[182] A POSITA would have recognized this as disclosing the limitations of 27.5.

263. Accordingly, *Krupa* discloses the limitations of 27.5.

f. <u>27.6: "in response to: determining that the fluid communicated via the manifold has satisfied one or more conditions."</u>

264. In addition to the disclosure above regarding opening and closing first and second valves to direct fluid into the first and second wells, *Krupa* provides detail of the decision-making process regarding when to open and close the valves. "In a non-limiting example, the fracturing pumping plan may include an automated valve sequencing [e.g., when to open and close] during completion stage based on pre-approved sequence as shown in FIGS. 2A-2G."[183] *Krupa* gives further details of the figures including "Referring to FIG. 2A, the hydraulic fracturing pumping system **200** is shown with fluid flow (see arrow **232**) to the first wellhead assembly **201a**."[184]

---

[182] Ex. 1003 at [0005].

[183] Ex. 1003 at [0037].

[184] Ex. 1003 at [0042].

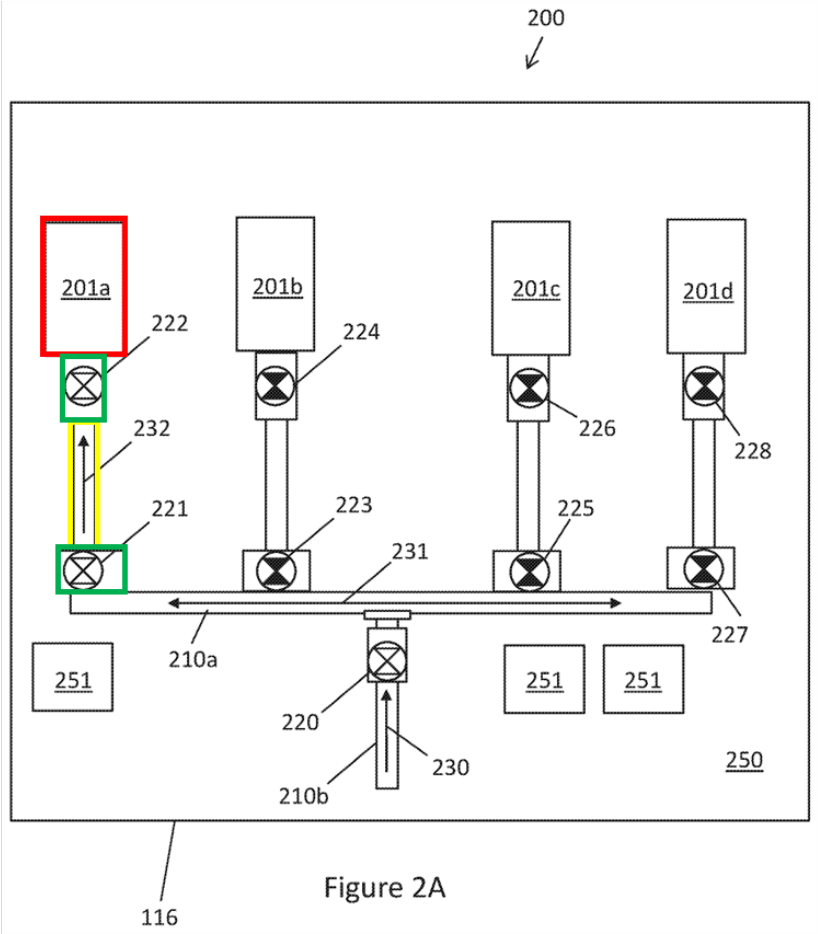

Figure 2A

265. *Krupa* provides several "fluid conditions" that must be satisfied before moving to the next stage of completion including "when a frac stage of the first wellhead assembly **201a** is at an end" and "the pump rate may be reduced to 5-15 bbl/min. Once a pressure has stabilized at the reduced pump rate, the software application may move the fracturing plan to the next step".[185]

266. *Krupa* then describes the "next step" regarding Fig. 2B. For example, "As shown in FIG. 2B, the fracturing pumping plan may include operating the

[185] Ex 1003 [0042]

second wellhead assembly **201b** to conduct hydraulic fracturing pumping. For example, a second set of valves **223**, **224** may be opened while the first set of valves **221**, **222** remain open during the pumping of the flush fluid."[186]

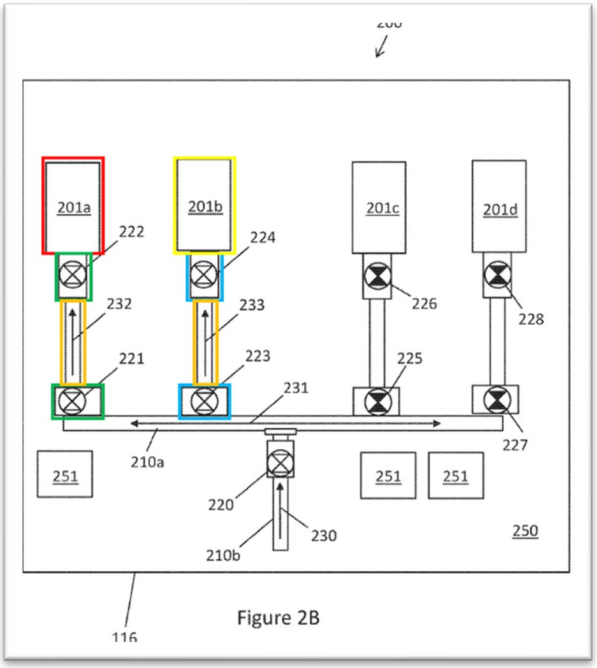

Figure 2B

The next step of *Krupa's* disclosed fracturing plan is "[o]nce injection is established and pressure has stabilized in both the first wellhead assembly **201a** and the second wellhead assembly **201b**, the first set of valves **221**, **222** may be closed remotely to shut in the first wellhead assembly **201a**, as shown by FIG. 2C."

[186] Ex. 1003 at [0043].

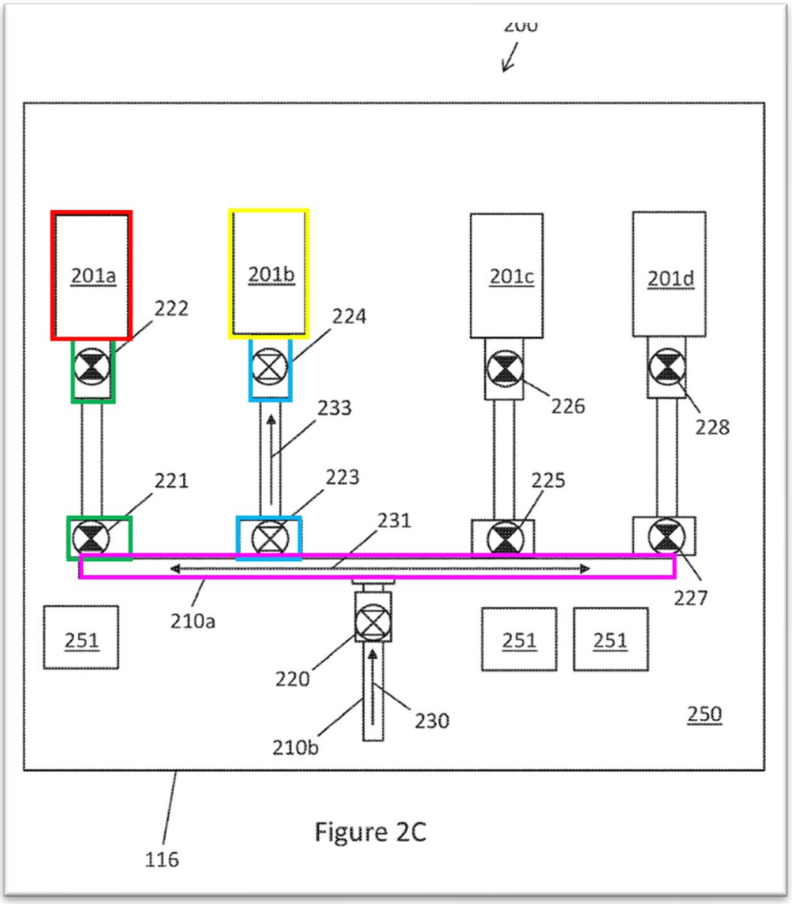

Figure 2C

267. Accordingly, *Krupa* teaches the sequence of valve events (i.e., open first valve, open second valve, close first valve after opening the second valve) and that the sequence, for example opening the second valve and closing the first valve are in response to determining that fluid conditions are met (e.g., completion of frac stage, pump rate reduced and stabilized, pressure has stabilized).

268. Thus, *Krupa* discloses the limitation of 27.6.

269. Because *Krupa* discloses each and every element of Claim 27, Claim 27 is anticipated by *Krupa*. To the extent that the Board finds Claim 27 is not

anticipated by *Krupa*, Claim 27 is obvious over *Krupa* alone for the reasons discussed above.

BB. DEPENDENT CLAIM 28

270. Dependent Claim 28 depends from Claim 27. In addition to the disclosure of the limitations of Claim 27 discussed above, *Krupa* discloses the additional limitations of Claim 28:

a. 28.1: "28. The system of claim 27, further comprising: a third valve via which fluid is communicated from the manifold to a third well;"

271. With the exception of being rewritten as part of a system claim and depending from Claim 27, the limitations of 28.1 are substantially similar to those of Claim Limitation 2.1 discussed above. Thus, the limitations of 28.1 are disclosed by *Krupa* at least for the same reasons as those discussed above regarding 2.1 in Section XI.B.a.

b. 28.2: "a fourth valve via which the fluid is adapted to be communicated to a fourth well; and"

272. *Krupa* discloses this limitation. *Krupa* teaches "[a]fter hydraulic fracturing operations are conducted on the third wellhead assembly **20lc**, flush fluids may be pumped into the third wellhead assembly **201c** and the pump rate may be reduced once a total volume of the flush fluid has been pumped. As shown by FIG. 2F, the fracturing pumping plan may next open a fourth set of valves **227**, [fourth valve] **228** while the third set of valves **225**, **226** are still open. With both the third

set of valves **225**, **226** and the fourth set of valves **227**, **228** open, the flush fluid flows (see arrows **234**, **235**) into both the third wellhead assembly 20lc and the fourth wellhead assembly **201d** [associated with the fourth well]."[187]

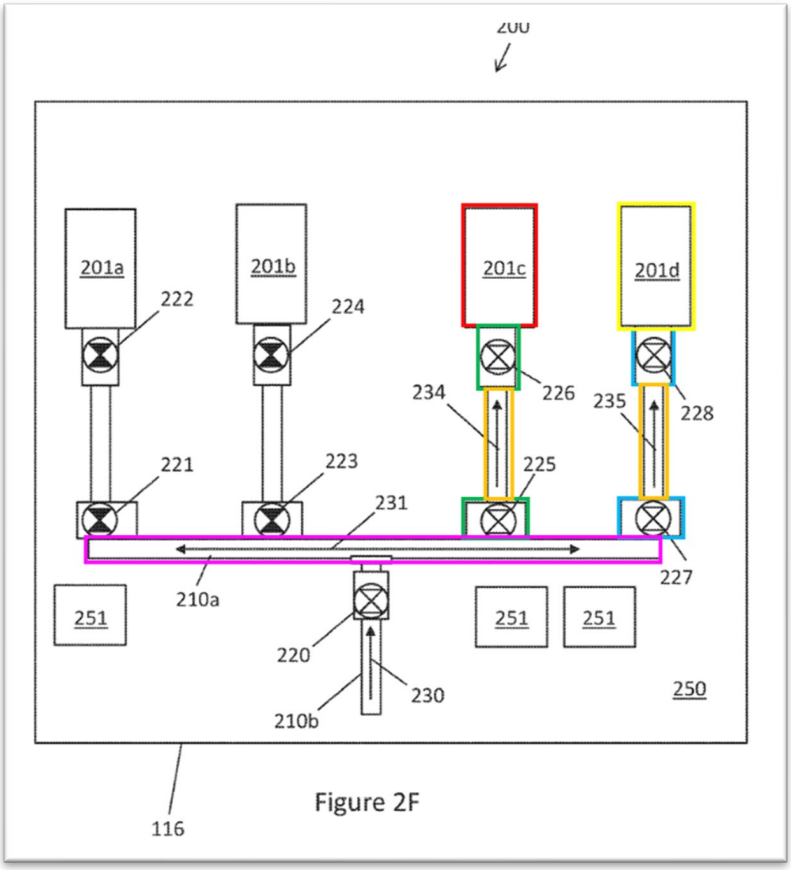

Figure 2F

273. In *Krupa*, "fourth valve" **227** is opened to allow fluid to flow into the "fourth well" through wellhead **201d**.

274. Accordingly, *Krupa* discloses the limitations of 28.2.

[187] Ex. 1003 at [0045].

c. **28.3: "the one or more controllers, configured to: open the fourth valve to thereby communicate fluid to the fourth well via the fourth valve; and"**

275. *Krupa* discloses this limitation. As discussed above regarding 27.3, *Krupa* discloses controllers for "automating valves within the hydraulic fracturing system to have a valve sequencing (e.g. opening and closing) to direct fluids (e.g. frac fluid) in a selected path."[188] *Krupa* teaches, with regard to the fourth valve, "[a]s shown by FIG. 2F, the fracturing pumping plan may next open a fourth set of valves **227**, **228** [fourth valve, annotated in blue] while the third set of valves **225**, **226** are still open. With both the third set of valves **225**, **226** and the fourth set of valves **227**, **228** open, the flush fluid flows (see arrows **234**, **235**) into both the third wellhead assembly **20lc** and the fourth wellhead assembly **201d** [associated with the fourth well, annotated in yellow]."[189]

[188] Ex. 1003 at [0018].

[189] Ex. 1003 at [0045].

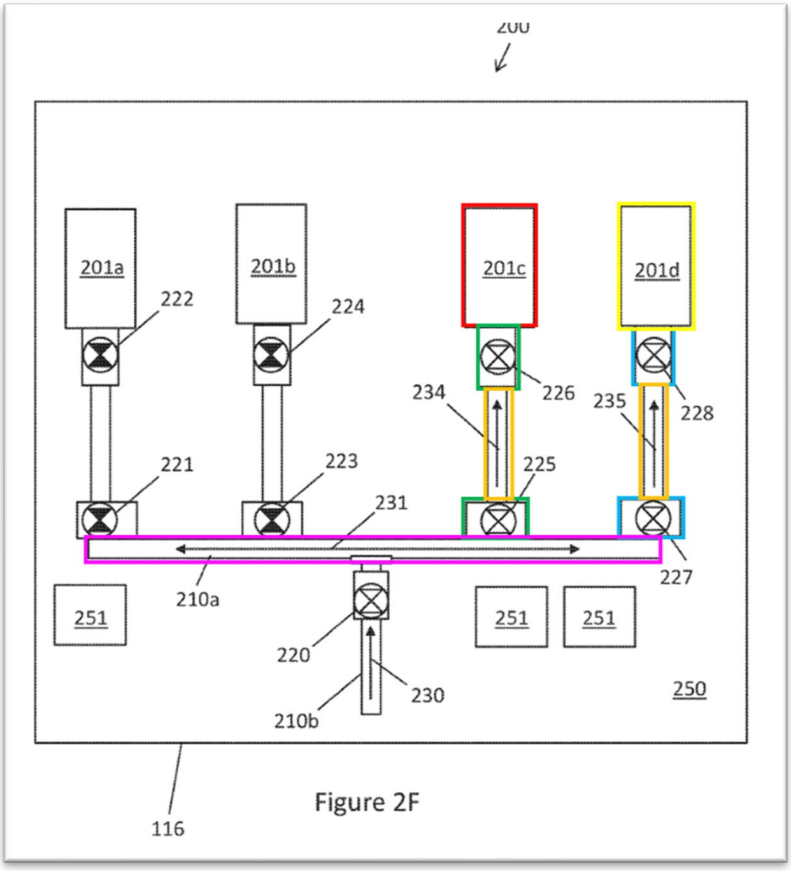

Figure 2F

276. *Krupa* discloses fluid flow into wellhead **201d** (indicated by fluid flow **235**) when valves **227,228** are opened. Accordingly, *Krupa* discloses controllers which are configured to open the fourth valve to communicate fluid to the fourth well. Thus, *Krupa* discloses the limitations of 28.3.

d. <u>28.4: "close the third valve after opening the fourth valve,"</u>

277. *Krupa* discloses this limitation. *Krupa* teaches "[w]ith both the third set of valves **225**, **226** and the fourth set of valves **227**, **228** open, the flush fluid flows (see arrows **234**, **235**) into both the third wellhead assembly **20lc** and the fourth wellhead assembly **201d**.Once injection is established and pressure has stabilized in

both the third wellhead assembly **201c** and the fourth wellhead assembly **201d**, the third set of valves **225**, **226** may be closed remotely to shut in the third wellhead assembly **201c**, as shown by FIG. 2G. In FIG. 2G, the fourth wellhead assembly **201d** may be isolated and hydraulic fracturing operations may be conducted."[190]

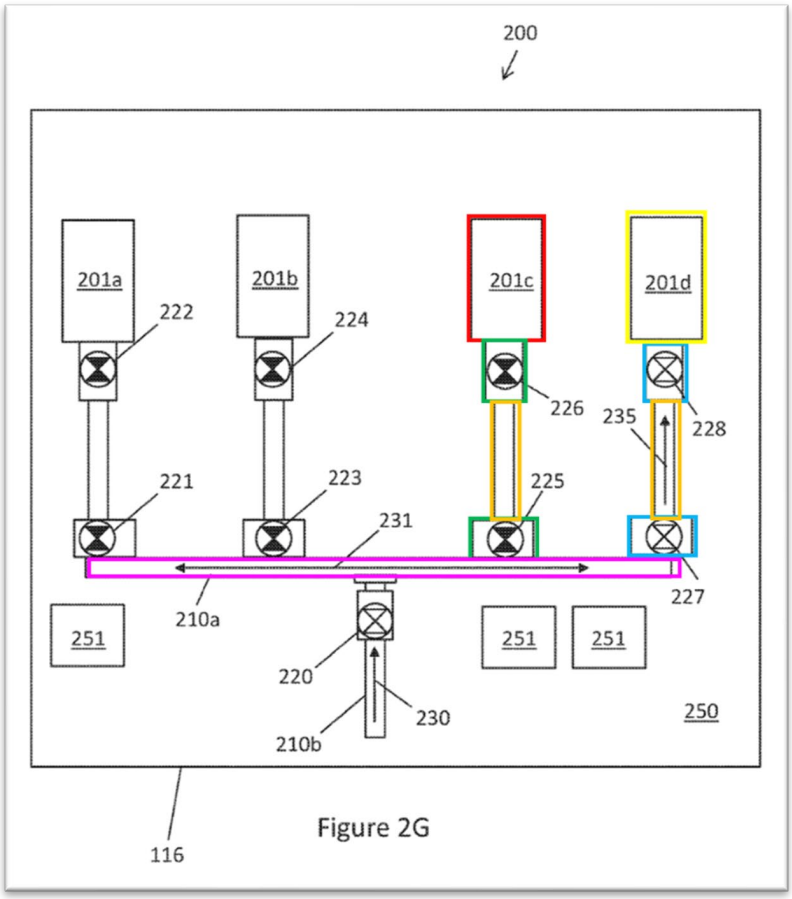

Figure 2G

278. *Krupa* discloses third valve **225, 226** are closed after fourth valve 227, **228** is opened. Accordingly, *Krupa* discloses the limitations of 28.4.

[190] Ex. 1003 at [0045].

e. **28.5: "in response to: determining that the fluid communicated via the manifold has satisfied the one or more conditions."**

279. *Krupa* discloses this limitation. *Krupa* teaches "[w]ith both the third set of valves **225**, **226** and the fourth set of valves **227**, **228** open, the flush fluid flows (see arrows **234**, **235**) into both the third wellhead assembly **20lc** and the fourth wellhead assembly **201d**. Once injection is established and pressure has stabilized in both the third wellhead assembly **201c** and the fourth wellhead assembly **201d**, the third set of valves **225**, **226** may be closed remotely to shut in the third wellhead assembly **201c**, as shown by FIG. 2G. In FIG. 2G, the fourth wellhead assembly **201d** may be isolated and hydraulic fracturing operations may be conducted."[191]

[191] Ex. 1003 at [0045].

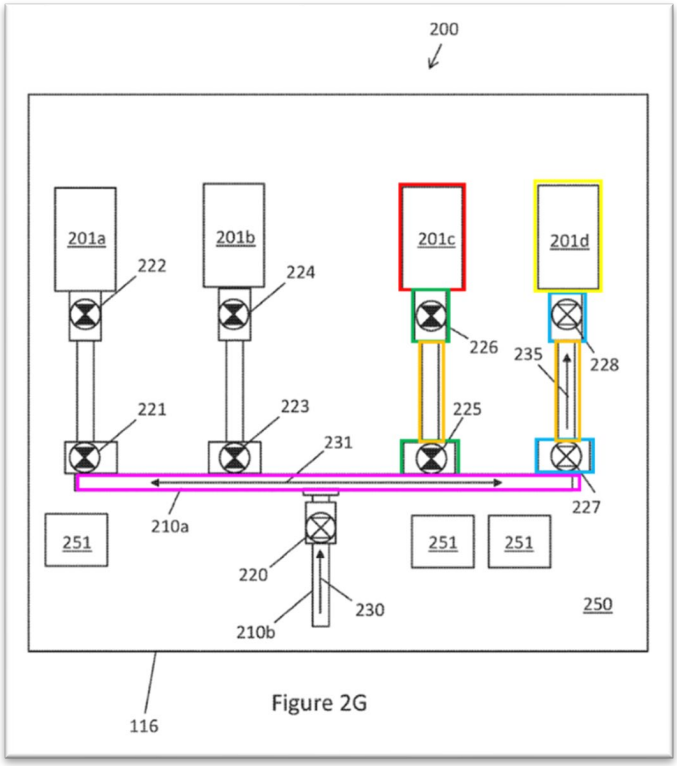

Figure 2G

280. *Krupa's* disclosure includes closing the third valve "[o]nce injection is established and pressure has stabilized in both the third wellhead assembly **201c** and the fourth wellhead assembly **201d**." The third valve is closed after the conditions "injection is established" and "pressure has stabilized" are met. Accordingly, *Krupa* discloses claim limitation 28.5.

281. Because *Krupa* discloses each and every element of Claim 28, Claim 28 is anticipated by *Krupa*. To the extent that the Board finds Claim 28 is not anticipated by *Krupa*, Claim 28 is obvious over *Krupa* alone for the reasons discussed above.

CC. DEPENDENT CLAIM 29

282. Dependent Claim 29 depends from Claim 28, which depends from Claim 27. In addition to the disclosure of the limitations of Claims 27 and 28 discussed above, *Krupa* discloses the additional limitations of Claim 29:

a. 29.1: "29. The system of claim 28, wherein the one or more controllers are further configured to: close the first valve after opening both the second valve and the fourth valve; and/or

283. As discussed above regarding Claim Limitations 27.3 and 27.5, *Krupa* teaches closing the first valve after opening the second valve. Further, as discussed above regarding claim 28.3, *Krupa* teaches opening the fourth valve. Further, *Krupa* teaches that valve switching operations can occur in any sequence. "In one or more embodiments, FIGS. 2A-2G may provide continuous hydraulic fracturing pumping operations between the wellhead assemblies **201a-201d**. While it is noted that FIGS. 2A-2G describes the sequence of the fracturing pumping plan from the first wellhead assembly **201a** to the fourth wellhead assembly **201d**, the sequence may be conducted between any of the wellhead assemblies **201a-201d** in any order."[192] Accordingly, *Krupa* discloses closing the first valve "in any order", which includes after opening both the second valve and the fourth valve as claimed.

[192] Ex. 1003 at [0046].

284. Accordingly, *Krupa* discloses the limitations of 29.1. To the extent the Board determines that *Krupa* does not explicitly discloses closing the first valve after opening the second and fourth valve, such a sequence of operations would have been obvious to a POSITA based on the teachings of *Krupa* that switching sequences could be conducted "in any order."

285. Additionally, Claim limitation 29.1 is the first prong in an "and/or" claim. Thus, Claim 29 is anticipated by or obvious over *Krupa* because *Krupa* discloses at least Claim Limitation 29.1. Further, as discussed below, *Krupa* explicitly discloses the second prong of the "and/or" statement contained in 29.2.

b. <u>29.2: "close the third valve after opening both the second valve and the fourth valve."</u>

286. As discussed above regarding 28.4, *Krupa* teaches closing the third valve after opening the fourth valve. In the example sequence of switching described by *Krupa*, the third set of valves is opened after the second set of valves is opened, "Referring to FIG. 2D, in one or more embodiments, the fracturing pumping plan may next open a third set of valves **225, 226** while the second set of valves **223**, **224** are still open."[193] Later in the sequence, after the third valve is opened the third valve is closed: "[w]ith both the third set of valves **225**, **226** and the fourth set of valves **227**, **228** open, the flush fluid flows (see arrows **234**, **235**) into both the third

[193] Ex. 1003 at [0044].

wellhead assembly **20lc** and the fourth wellhead assembly **201d**. Once injection is established and pressure has stabilized in both the third wellhead assembly **201c** and the fourth wellhead assembly **201d**, the third set of valves **225**, **226** may be closed remotely to shut in the third wellhead assembly **201c**, as shown by FIG. 2G."[194]

287. As the third set of valves are only closed after they are open, and the third valve is opened after the second valve is opened, and after the fourth valve is opened, *Krupa* discloses closing the third valve after opening both the second and fourth valve.

288. Further, as discussed above regarding claim 27.4, *Krupa* teaches opening the second valve. Further still, *Krupa* teaches that valve switching operations can occur in any sequence. "In one or more embodiments, FIGS. 2A-2G may provide continuous hydraulic fracturing pumping operations between the wellhead assemblies **201a-201d**. While it is noted that FIGS. 2A-2G describes the sequence of the fracturing pumping plan from the first wellhead assembly **201a** to the fourth wellhead assembly **201d**, the sequence may be conducted between any of the wellhead assemblies **201a-201d** in any order."[195] Accordingly, *Krupa* discloses closing the third valve "in any order," which includes after opening both the second valve and the fourth valve as claimed.

---

[194] Ex. 1003 at [0045].

[195] Ex. 1003 at [0046].

289. I note that Claim 29, while requiring a sequence of valve opening, does not require any sequence of communicating fluid with respect to the various valve opening and closings. To the extent that there is a requirement for fluid flow to all three wells simultaneously, this operation would have been obvious to a POSITA in light of the teaching of *Krupa* regarding continuous pumping and that valve operations can occur in any order.

290. Accordingly, *Krupa* discloses the limitations of 29.2.

291. Because *Krupa* discloses each and every element of Claim 29, Claim 29 is anticipated by *Krupa*. To the extent that the Board finds Claim 29 is not anticipated by *Krupa*, Claim 29 is obvious over *Krupa* alone for the reasons discussed above.

DD. DEPENDENT CLAIM 30

292. Dependent Claim 30 depends from Claim 27. In addition to the disclosure of the limitations of Claim 27 discussed above, *Krupa* discloses the limitations of Claim 30:

a. 30. The system of claim 27, wherein the one or more conditions include one or more flow rate conditions.

293. With the exception of being rewritten as a system claim and depending from Claim 27, the limitations of Claim 30 are identical to those of Claim 4 discussed above. Thus, the limitations of Claim 30 are disclosed by *Krupa* at least for the same reasons as those discussed above regarding Claim 4 in Section XI.D. Accordingly,

Claim 30 is anticipated by *Krupa*, or in the alternative, obvious over *Krupa* alone for the reasons discussed above.

EE. DEPENDENT CLAIM 31

294. Dependent Claim 31 depends from Claim 30, which depends from claim 27 . In addition to the disclosure of the limitations of Claims 27 and 30 discussed above, *Krupa* discloses the additional limitations of Claim 31:

a. **31. The system of claim 30, wherein the fluid communicated via the manifold has satisfied the one or more flow rate conditions when a flow rate of the fluid is below an upper threshold, above a lower threshold, or both.**

295. With the exception of being rewritten as a system claim and depending from Claim 30, the limitations of Claim 31 are identical to those of Claim 5 discussed above. Thus, the limitations of Claim 31 are disclosed by *Krupa* at least for the same reasons as those discussed above regarding Claim 5 in Section XI.E. Accordingly, Claim 31 is anticipated by *Krupa*, or in the alternative, obvious over *Krupa* alone for the reasons discussed above.

FF. DEPENDENT CLAIM 32

296. Dependent Claim 32 depends from Claim 30, which depends from Claim 27. In addition to the disclosure of the limitations of Claims 27 and 30 discussed above, *Krupa* discloses the additional limitations of Claim 32:

a. **32. The system of claim 30, wherein the fluid communicated via the manifold has not satisfied the one or more flow rate conditions when a flow rate of the fluid is above an upper threshold or below a lower threshold.**

297. With the exception of being rewritten as a system claim and depending from Claim 30, the limitations of Claim 32 are identical to those of Claim 6 discussed above. Thus, the limitations of Claim 32 are disclosed by *Krupa* at least for the same reasons as those discussed above regarding Claim 6 in Section XI.F. Accordingly, Claim 32 is anticipated by *Krupa*, or in the alternative, obvious over *Krupa* alone for the reasons discussed above.

GG. DEPENDENT CLAIM 33

298. Dependent Claim 33 depends from Claim 27. In addition to the disclosure of the limitations of Claim 27 discussed above, *Krupa* discloses the additional limitations of Claim 33:

a. **"33. The system of claim 27, further comprising the manifold."**

299. As discussed above regarding Claim 27, *Krupa* teaches the manifold for communicating fluid to both the first and second valves. As an example, in one embodiment *Krupa's* system "may include pumping fluids into a first well via at least one pump manifold by opening a first set of valves."[196] As another example, *Krupa's* system "may also include pumping the fluids into a second well via the at

[196] Ex. 1003 at [0005].

least one pump manifold while continuously pumping the fluids into the first well by opening a second set of valves."[197]

300. Accordingly, *Krupa* discloses the limitations of Claim 33. Thus, Claim 33 is anticipated by *Krupa*, or in the alternative, obvious over *Krupa* alone for the reasons discussed above.

HH. DEPENDENT CLAIM 34

301. Dependent Claim 34 depends from Claim 27. In addition to the disclosure of the limitations of Claim 27 discussed above, *Krupa* discloses the additional limitations of Claim 34:

a. 34.1: "34. The system of claim 27, further comprising one or more pumps;"

302. *Krupa* teaches, in general regarding fracturing operations, "[a] wide variety of hydraulic fracturing equipment is used in oil and natural gas fields, such as a slurry blender, one or more high-pressure, high-volume fracturing pumps and a monitoring unit."[198] As a further example, in *Krupa's* system "the at least one pump manifold **103** may be fluidly connected to and receive pressurized fracking fluid from one or more high pressure pumps (not shown), and direct that pressurized fracking fluid to the zipper manifold **102**, which may include one or more valves

[197] Ex. 1003 at [0005].

[198] Ex. 1003 at [0002].

that may be closed to isolate the wellhead assembly **101** from the flow of pressurized fluid within the zipper manifold **102** and pump manifold **103**."[199]

303. Accordingly, *Krupa* discloses one or more pumps as claimed by 34[a].

b. <u>34.2: "wherein the one or more controllers are further configured to cause the one or more pumps to pump the fluid into the manifold."</u>

304. As discussed above regarding 34.1, *Krupa's* pumps are configured to pump fluid into pump manifold **103** and zipper manifold **102** [annotated in blue]. *Krupa* teaches the zipper manifold contains the valves used to isolate the wellheads and wells [annotated in red] from the pump manifold, as seen in Figure 1.

[199] Ex. 1003 at [0019].

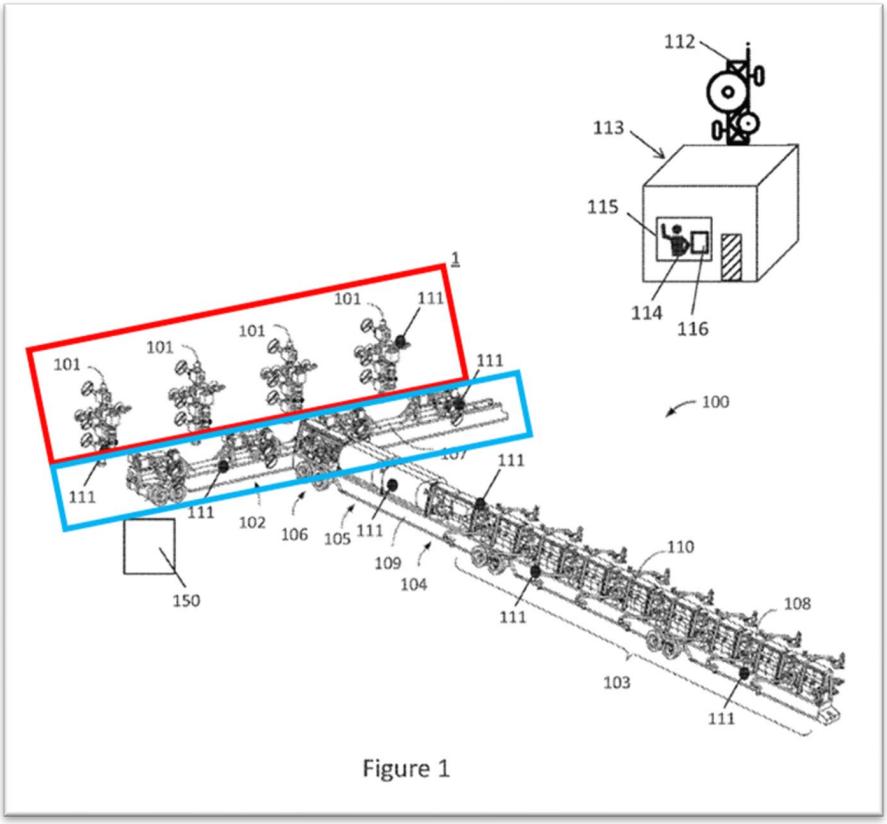

305. A POSITA would have understood zipper manifold **102** to be the same as manifold **210a** [annotated in pink] shown in, for example, Fig. 2A, and used to conduct the switching operations described in Claim **27**.

306. Accordingly, *Krupa* discloses the limitations of 34.2. Because Krupa discloses each and every limitation of Claim 34, Claim 34 is anticipated by *Krupa*, or in the alternative, obvious over *Krupa* alone for the reasons discussed above.

II. <u>DEPENDENT CLAIM 35</u>

307. Dependent Claim 35 depends from Claim 27. In addition to the disclosure of the limitations of Claim 27 discussed above, *Krupa* discloses the additional limitations of Claim 35:

a. <u>35. The system of claim 27, wherein the fluid communicated via the manifold is hydraulic fracturing fluid.</u>

308. With the exception of being rewritten as a system claim and depending from Claim 27, the limitations of Claim 35 are identical to those of Claim 10 discussed above. Thus, the limitations of Claim 35 are disclosed by *Krupa* at least for the same reasons as those discussed above regarding Claim 10 in Section XI.J. Accordingly, Claim 35 is anticipated by *Krupa*, or in the alternative, obvious over *Krupa* alone for the reasons discussed above.

JJ. <u>DEPENDENT CLAIM 36</u>

309. Dependent Claim 36 depends from Claim 27. In addition to the disclosure of the limitations of Claim 27 discussed above, *Krupa* discloses the additional limitations of Claim 36:

a. <u>36. The system of claim 27, wherein: the first valve is a first zipper valve; and/or the second valve is a second zipper valve.</u>

310. With the exception of being rewritten as a system claim and depending from Claim 27, the limitations of Claim 36 are identical to those of Claim 11 discussed above. Thus, the limitations of Claim 36 are disclosed by *Krupa* at least for the same reasons as those discussed above regarding Claim 11 in Section XI.K. Accordingly, Claim 37 is anticipated by *Krupa*, or in the alternative, obvious over *Krupa* alone for the reasons discussed above.

KK. DEPENDENT CLAIM 37

311. Dependent Claim 37 depends from Claim 27. In addition to the disclosure of the limitations of Claim 27 discussed above, *Krupa* discloses the additional limitations of Claim 37:

a. 37.1: "The system of claim 27, wherein the second valve is associated with both the manifold and the second well; and"

312. With the exception of being rewritten as a system claim and depending from Claim 27, the limitations of 37.1 are identical to those of Claim Limitation 12.1 discussed above. Thus, the limitations of Claim 37.1 are disclosed by *Krupa* at least for the same reasons as those discussed above regarding Claim 12.1 in Section XI.L.a.

b. 37.2: "wherein communicating fluid to the second well via the second valve comprises communicating fluid to the second well via the manifold and the second valve"

313. With the exception of being rewritten as a system claim and depending from Claim 27, the limitations of 37.2 are identical to those of Claim Limitation 12.2 discussed above. Thus, the limitations of Claim 37.2 are disclosed by *Krupa* at least for the same reasons as those discussed above regarding Claim 12.2 in Section XI.L.b.

314. Because *Krupa* discloses each and every limitation of Claim 37, Claim 37 is anticipated by *Krupa*, or in the alternative, obvious over *Krupa* alone for the reasons discussed above.

LL. DEPENDENT CLAIM 38

315. Dependent Claim 38 depends from Claim 37, which depends from claim 27. In addition to the disclosure of the limitations of Claims 27 and 37 discussed above, *Krupa* discloses the additional limitations of Claim 38:

a. "38. The system of claim 37, wherein the fluid communicated via the manifold is hydraulic fracturing fluid."

316. With the exception of being rewritten as a system claim and depending from Claim 37, the limitations of 38 are identical to those of Claim 13 discussed above. Thus, the limitations of Claim 38 are disclosed by *Krupa* at least for the same reasons as those discussed above regarding Claim 13 in Section XI.M. Accordingly, Claim 37 is anticipated by *Krupa*, or in the alternative, obvious over *Krupa* alone for the reasons discussed above.

XII. GROUNDS 3 AND 4: ANTICIPATED BY AND/OR OBVIOUS OVER *CARR*

317. It is my opinion that *Carr*[200] discloses and/or renders obvious each and every element of Claims 1-38 of the '770 Patent. To the extent that the Board determines *Carr* does not anticipate the claims, it is my opinion that *Carr* renders Claims 1-38 of the '770 Patent obvious.

[200] Ex. 1004.

A. INDEPENDENT CLAIM 1

318. It is my opinion that *Carr* anticipates, or at least renders obvious, Claim 1 of the '770 Patent. Details regarding the specific disclosures of *Carr* are contained in the subsections following. To the extent the board determines that *Carr* does not explicitly disclose the limitations of Claim 1, a POSITA would have found the pumping and switching arrangement of Claim 1 to be obvious in light of the disclosure and teachings of *Carr*.

a. 1.1: "1. A method, comprising: communicating fluid to a first well via a manifold and a first valve, the first valve being associated with both the manifold and the first well; and"

319. *Carr* discloses this limitation. *Carr* discloses a method of hydraulically fracturing a plurality of wells. The title of *Carr* is "Method and Apparatus for Metering Flow during Centralized Well Treatment."[201] A POSITA would have recognized "centralized well treatment" to include hydraulic fracturing. *Carr* further describes "the well treatment facility **100** allows for fluids for treatment, stimulation, fracturing or other well operations to be manufactured…prior to being transferred to the first well **140** and the second well **142.**"[202] *Carr* further teaches "in some embodiments, the mixed or manufactured fluid from the mixing blender **108** can be

[201] Ex. 1004 at Title.

[202] Ex. 1004 at [0017].

pumped simultaneously to the first well **140** and the second well **142** via a manifold **120**."[203]

320. As discussed above, *Carr* teaches "in some embodiments, the mixed or manufactured fluid from the mixing blender **108** can be pumped simultaneously to the first well **140** [annotated in blue] and the second well **142** via a manifold **120**.[annotated in green]."[204] Further, *Carr* discloses that the fluid going to the well is controlled by valves: "The first valve **470** [annotated in red] can be utilized to control the flow from the mixing blender **108** to the first well **140** and the second valve **472** can be utilized to control the flow from the mixing blender **108** to the second well **142.**"[205] Further, *Carr* teaches "the first valve **470** and the second valve **472** can allow for the first well **140** and the second well **142** to each by stimulated individually by opening the respective first valve **470** or the second valve **472** and closing the other valves. Further, in some embodiments, the first valve **470** and the second valve **472** can be used to control the flow rate to the first well **140**, the second well **142**, or to both the first well **140** and the second well **142** simultaneously."[206]

---

[203] Ex. 1004 at [0021].

[204] Ex. 1004 at [0021].

[205] Ex. 1004 at [0033].

[206] Ex. 1004 at [0033].

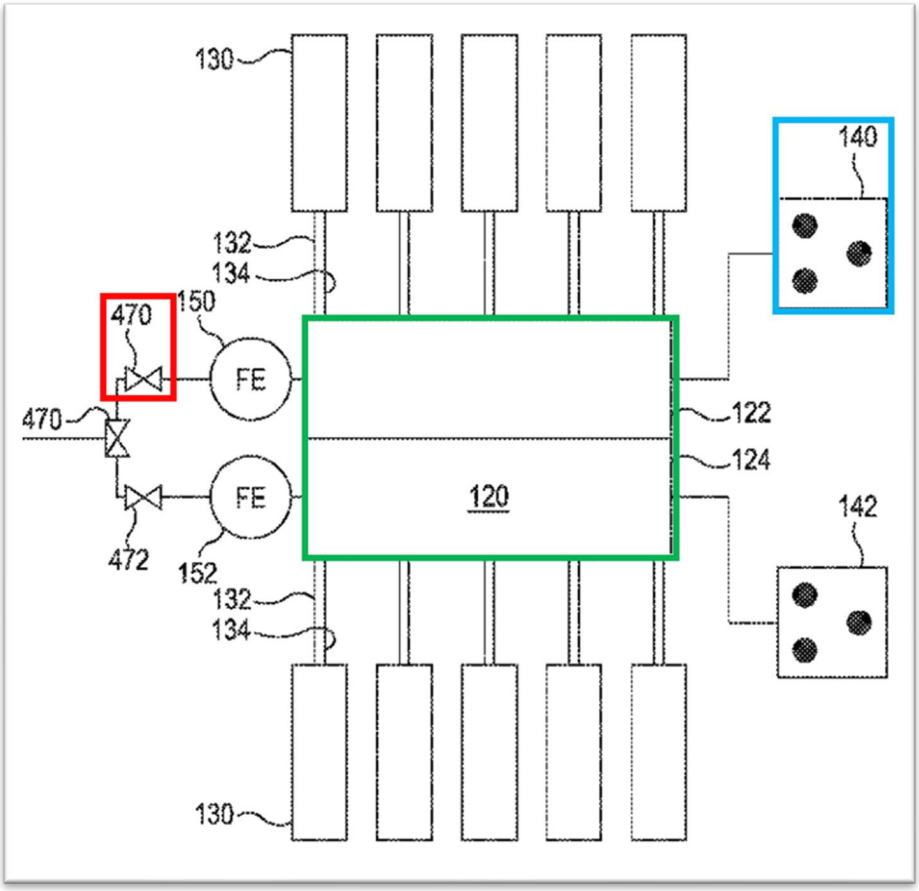

Carr Fig. 1 excerpted and annotated

321. Accordingly, *Carr* teaches communicating fluid to first well **140** via a manifold **120** and a first valve **470**. As seen in Fig. 1, and discussed in the text, first valve **470** is associated with both well **140** and manifold **120**. *Carr* also discloses that "[i]n some embodiments, the manifold 120 is an integrated manifold that defines a first isolated manifold path 122 and a second isolated manifold path 124 within an

integrated body,"[207] and that the "first valve 470 and the second valve 472 can be disposed outside of the manifold 120 or disposed within the manifold 120."[208]

322. Accordingly, *Carr* discloses the limitations of 1.1.

b. <u>1.2: "in response to determining that the fluid communicated via the manifold has satisfied one or more conditions:"</u>

323. *Carr* discloses this limitation. As an example, *Carr* discloses using the flowrate (a condition of the fluid) to trigger opening or closing of valves. Thus, *Carr* discloses the limitations of 1.2. As discussed above regarding 1.1, *Carr* teaches "the first valve **470** and the second valve **472** can allow for the first well **140** and the second well **142** to each by stimulated individually by opening the respective first valve **470** or the second valve **472** and closing the other valves. Further, in some embodiments, the first valve **470** and the second valve **472** can be used to control the flow rate to the first well **140**, the second well **142**, or to both the first well **140** and the second well **142** simultaneously."[209] Further, *Carr* teaches that the control of the valves (i.e. opening and closing of the valves) based on the flowrate condition of the fluid.[210]

---

[207] Ex. 1004 at [0026].

[208] Ex. 1004 at [0033].

[209] Ex. 1004 at [0033].

[210] Ex. 1004 at [0058], [0060].

324. Initially, *Carr* teaches the use of flowmeters to "provide an operator and or a control system **112** with flow rate and total flow information. Advantageously, the first flow meter **140** and the second flow meter **152** can provide flow information about each flow to the first well **140** and the second well **142** for precise measurement and regulation."[211] Further, *Carr* discloses the use of the flow data (i.e. flowrate, total flow information) to "control the position of the first valve **470**, second valve **472**, by utilizing flow data from the flow meters **150**, **152** in light of fluid flow targets for the first well **140** and/or second well **142**."[212] A POSITA would have immediately recognized flow data including flow rate and total flow information to be a fluid condition. Further, a POSITA would have immediately recognized that action takes place (i.e. control the position of (open/close) valves **470**, **472**) in response to the flow condition as it relates to the fluid flow targets. *Carr* says that the action is taken considering fluid flow targets, which would be a specific fluid condition(s).

325. Accordingly, *Carr* discloses the limitations of 1.2.

---

[211] Ex. 1004 at [0023].

[212] Ex. 1004 at [0035].

c. <u>1.3: "opening a second valve; communicating fluid to a second well via the second valve; and"</u>

326. *Carr* discloses this limitation. *Carr* discloses "the first valve **470** and the second valve **472** can allow for the first well **140** and the second well **142** to each by stimulated individually by opening the respective first valve **470** or the second valve **472** and closing the other valves."[213] Further, as described above regarding 1[b], *Carr* explicitly teaches the control of the position of the valve (opening or closing) is conducted in light of the fluid condition. Further, *Carr* teaches "the first valve **470** and the second valve **472** can allow for the first well **140** and the second well **142** to each by stimulated individually by opening the respective first valve **470** or the second valve **472** and closing the other valves. Further, in some embodiments, the first valve **470** and the second valve **472** can be used to control the flow rate to the first well **140**, the second well **142**, or to both the first well **140** and the second well **142** simultaneously."[214]

327. Accordingly, *Carr* discloses "opening a second valve" as claimed in 1.3.

328. *Carr* teaches "in some embodiments, the mixed or manufactured fluid from the mixing blender **108** can be pumped simultaneously to the first well **140**

[213] Ex. 1004 at [0033].

[214] Ex. 1004 at [0033].

[annotated in blue] and the second well **142** [annotated in yellow] via a manifold **120**.[annotated in green]"[215] Further, *Carr* discloses that the fluid going to the well is controlled by valves: "The first valve **470** [annotated in red] can be utilized to control the flow from the mixing blender **108** to the first well **140** and the second valve **472** [annotated in orange] can be utilized to control the flow from the mixing blender **108** to the second well **142.**"[216] Further, *Carr* teaches "the first valve **470** and the second valve **472** can allow for the first well **140** and the second well **142** to each by stimulated individually by opening the respective first valve **470** or the second valve **472** and closing the other valves. Further, in some embodiments, the first valve **470** and the second valve **472** can be used to control the flow rate to the first well **140**, the second well **142**, or to both the first well **140** and the second well **142** simultaneously."[217]

[215] Ex. 1004 at [0021].

[216] Ex. 1004 at [0033].

[217] Ex. 1004 at [0033].

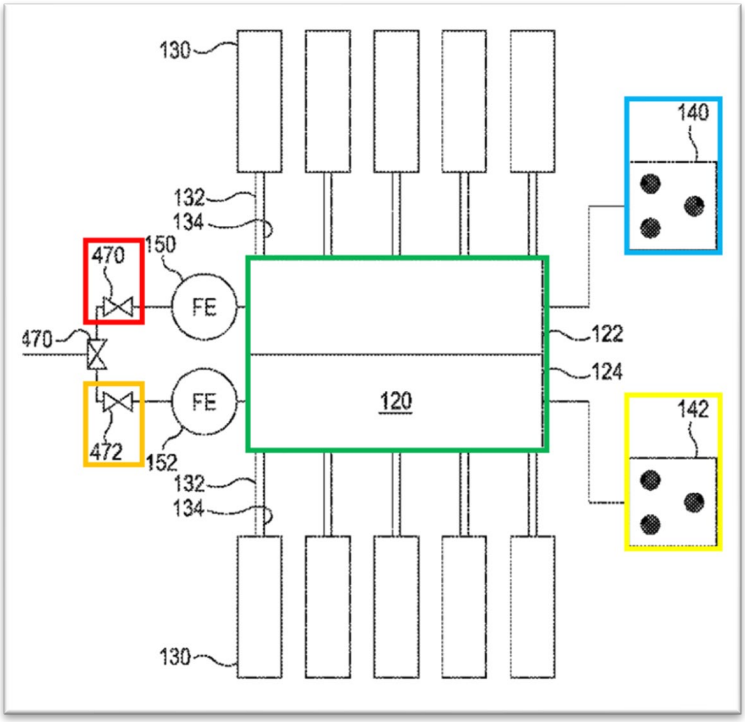

Carr Fig. 1 annotated and excerpted

329. Accordingly, *Carr* teaches communicating fluid to second well **142** via a manifold **120** and a second valve **472**. As seen in Fig. 1, and discussed in the text, second valve **472** is associated with both well **142** and manifold **122**.

330. Thus, *Carr* discloses the limitations of 1.3.

d. <u>1.4: "closing the first valve after opening the second valve."</u>

331. *Carr* discloses this limitation. *Carr* teaches flowing fluid simultaneously to both the first and second well: "the first valve **470** and the second valve **472** can be used to control the flow rate to the first well **140**, the second well **142**, or to both the first well **140** and the second well **142** simultaneously."[218] *Carr*

[218] Ex. 1004 at [0033].

further teaches control (opening and closing) of valves in response to fluid conditions including flow data: "the control system **112** can be utilized to control the position of the first valve **470**, second valve **472**,…by utilizing flow data from the flow meters **150**, **152** in light of fluid flow targets for the first well **140** and/or second well **142**." During simultaneous flow of fluid to both well **470** and **472**, as taught by *Carr*, both valves **470** and **472** would be open. During this operation, *Carr* teaches control system **112** would close valve **470** (at least partially) in response to flow conditions such as the flow rate being higher than the fluid flow targets. Accordingly, the first valve would be closed after opening the second valve.

332. Thus, *Carr* discloses the limitations of 1.4. To the extent the Board finds that *Carr* does not explicitly disclose closing the first valve after opening the second valve, such as during simultaneous flow to both wells, taking such an action would have been obvious to a POSITA in light of the teachings of *Carr* regarding simultaneous flow to both wells, as well as *Carr's* disclosure of controlling the position of the first valve and second valve.

333. Because *Carr* discloses each and every element of Claim 1, Claim 1 is anticipated by *Carr*. To the extent that the Board finds Claim 1 is not anticipated by *Carr*, Claim 1 is obvious over *Carr* alone for the reasons discussed above.

B. DEPENDENT CLAIM 2

334. Claim 2 depends from Claim 1. In addition to the disclosure of the limitations of Claim 1 discussed above, *Carr* discloses the additional limitations of Claim 2:

a. 2.1: "2. The method of claim 1, further comprising: communicating fluid to a third well via the manifold and a third valve, the third valve being associated with both the manifold and the third well; and"

335. *Carr* discloses using monitored flow data to control valve positions for "multiple wells" "to control the production of fluid and the output of fluid" to each well, individually and/or simultaneously.[219] *Carr* describes in more detail examples with two wells, but *Carr* also discloses "multiple wells" may be treated with the method and apparatuses described.[220] There is no limitation in *Carr* restricting "multiple wells" to one or two wells. As discussed with respect to Claim Limitations 1.1 and 1.3, *Carr's* method and apparatus includes valves associated with a manifold and a well and opening valves to communicate fluid to a corresponding well. Thus, *Carr* discloses communicating fluid to a third well via the manifold and a third valve, the third valve being associated with both the manifold and the third well, as claimed.

[219] Ex. 1004 at [0025], [0033], [0035].

[220] Ex. 1004 at [0001], [0013]-[0016].

336. To the extent that the Board finds *Carr* does not explicitly disclose Claim Limitation 2.1, the method claimed in 2.1 would have been obvious to a POSITA in light of the teachings of *Carr* along with the knowledge of a POSITA. As discussed above regarding Claim Limitation 1.1, *Carr* discloses communicating fluid to a well in a multi-well environment. As was well known to a POSITA, a well pad may include one, two, three, four, or more wells. Thus, although *Carr* discusses a first well and a second well in detail, it would have been obvious to a POSITA to perform the same method or sequence of the first and second wells on a third well, a fourth well, and any additional wells based on *Carr's* teaching of performing the method on multiple wells (i.e. first and second well). Moreover, mere repetition of elements has no patentable significance unless a new and unexpected result is produced. Here, performing the method of Claim 1 on additional wells in the same environment (*i.e.*, third well) would be performed in the same way and produce the same expected results as the first and second well and therefore would have been obvious to a POSITA.

337. Accordingly, *Carr* discloses or alone renders obvious Claim Limitation 2.1.

b. <u>2.2: "in response to determining that the fluid communicated via the manifold has satisfied the one or more conditions:"</u>

338. The limitations of 2.2 are identical to those of Claim Limitation 1.2 and are disclosed by *Carr* for the same reasons as those discussed in Section XII.A.b.

c. <u>2.3: "opening a fourth valve;"</u>

339. As discussed above with respect to Claim Limitation 2.1, *Carr* discloses using monitored flow data to control valve positions for "multiple wells" "to control the production of fluid and the output of fluid" to each well, individually and/or simultaneously.[221] *Carr* describes in more detail examples with two wells, but *Carr* also discloses "multiple wells" may be treated with the method and apparatuses described.[222] There is no limitation in *Carr* restricting "multiple wells" to one or two wells. As discussed with respect to Claim Limitations 1.1 and 1.3, *Carr's* method and apparatus includes valves associated with a manifold and a well, and opening valves to communicate fluid to a corresponding well. Thus, *Carr* discloses opening a fourth valve so that fluid can be communicated to a fourth well via the manifold and a fourth valve.

340. To the extent that the Board finds that Claim Limitation 2.3 is not explicitly disclosed in *Carr*, the method claimed in Claim Limitation 2.3 would have

[221] Ex. 1004 at [0025], [0033], [0035].

[222] Ex. 1004 at [0001], [0013]-[0016].

been obvious to a POSITA in light of the teachings of *Carr* along with the knowledge of a POSITA. As discussed above regarding 1.3, *Carr* discloses opening valves to communicate fluid to a well in a multi-well environment. As was well known to a POSITA, a well pad may include one, two, three, four, or more wells. Thus, although *Carr* discusses a first well and a second well in detail, it would have been obvious to a POSITA to perform the same method or sequence of the first and second wells on a third well, a fourth well, and any additional wells based on *Carr's* teaching of performing the method on multiple wells (i.e. first and second well). Moreover, mere repetition of elements has no patentable significance unless a new and unexpected result is produced. Here, performing the method of Claim 1 on additional wells in the same environment (*i.e.*, fourth well and fourth valve) would be performed in the same way and produce the same expected results as the first and second well and therefore would have been obvious to a POSITA.

d. 2.4: "communicating fluid to a fourth well via the fourth valve; and"

341. As discussed in regarding Claim Limitation 2.3, *Carr* discloses a method and apparatus for treating multiple wells, which would include opening a fourth valve so that fluid can be communicated to a fourth well via the manifold through a fourth valve to a fourth well.

342. To the extent that the Board finds that *Carr* does not explicitly disclose this limitation, the method claimed in Claim Limitation 2.4 would have been obvious

to a POSITA in light of the teachings of *Carr* along with the knowledge of a POSITA for the same reasons as those discussed regarding 2.2. Performing the method of Claim 1 on additional wells in the same environment (*i.e.*, fourth well and fourth valve) would be performed in the same way and produce the same expected results as the first and second well and therefore would have been obvious to a POSITA.

e. <u>2.5: "closing the third valve after opening the fourth valve."</u>

343. As discussed above with respect to Claim Limitation 2.1, *Carr* discloses using monitored flow data to control valve positions for "multiple wells" "to control the production of fluid and the output of fluid" to each well, individually and/or simultaneously.[223] *Carr* describes in more detail examples with two wells, but *Carr* also discloses "multiple wells" may be treated with the method and apparatuses described.[224] As discussed with respect to Claim Limitations 1.1 and 1.4, *Carr's* method and apparatus include valves associated with a manifold and a well, and opening valves to communicate fluid to a corresponding well and closing valves to stop fluid flow into a well. Specifically, during operation, *Carr* teaches control system **112** would close valve **470** (at least partially) in response to flow conditions such as the flow rate being higher than the fluid flow targets. *Carr* further teaches flowing fluid to multiple wells simultaneously, as discussed regarding 1.4.

---

[223] Ex. 1004 at [0025], [0033], [0035].

[224] Ex. 1004 at [0001], [0013]-[0016].

Thus, for multiple wells *Carr* discloses closing one valve to one well after opening another valve to another well. Thus, *Carr*'s disclosure includes opening a fourth valve so that fluid can be communicated to a fourth well via the manifold and a fourth valve and closing a third valve after opening the fourth valve.

344. To the extent that the Board finds that *Carr* does not expressly disclosed Claim Limitation 2.5, the method claimed in Claim Limitation 2.5 would have been obvious to a POSITA in light of the teachings of *Carr* along with the knowledge of a POSITA. As discussed above regarding 1.4, *Carr* teaches closing and opening valves in response to fluid conditions especially flow rate. Further, *Carr* discloses closing a first valve after opening a second valve as discussed above regarding 1.4. As was well known to a POSITA, a well pad may include one, two, three, four, or more wells. Thus, although *Carr* discusses a first well and a second well in detail, it would have been obvious to a POSITA to perform the same method or sequence of the first and second wells on a third well, a fourth well, and any additional wells based on *Carr's* teaching of performing the method on multiple wells (*i.e.*, first and second well). Moreover, mere repetition of elements has no patentable significance unless a new and unexpected result is produced. Here, performing the method of Claim 1 on additional wells in the same environment (*i.e.*, third and fourth wells and third and fourth valves) would be performed in the same way and produce the same

expected results as the first and second well and therefore would have been obvious to a POSITA. Accordingly, *Krupa* discloses the limitations of 2.5.

345. Because *Carr* discloses each and every limitation of Claim 2, Claim 2 is anticipated by *Carr*, or in the alternative, obvious over *Carr* alone for the reasons discussed above.

C. DEPENDENT CLAIM 3

346. Dependent Claim 3 depends from Claim 2, which depends from Claim 1. In addition to the disclosure of the limitations of Claims 1 and 2 discussed above, *Carr* discloses the additional limitations of Claim 3:

a. 3.1: "3. The method of claim 2, wherein: the first valve is closed after opening both the second valve and the fourth valve; and/or"

347. *Carr* describes monitoring flow data to control valve positions for *multiple wells*, which a POSITA would readily have understood to mean two, three, four, or more wells, to selectively control the flow of fluid through the system based on fluid flow targets to each well, individually and/or simultaneously.[225] In its example with respect to two wells, *Carr* explains "the first valve **470** and the second valve **472** can allow for the first well **140** and the second well **142** to each by stimulated individually by opening the respective first valve **470** or the second valve **472** and closing the other valves. Further, in some embodiments, the first valve **470**

[225] Ex. 1004 at [0025], [0033], [0035].

and the second valve **472** can be used to control the flow rate to the first well 140, the second well **142**, or to both the first well **140** and the second well **142** simultaneously."[226] Further, as discussed above regarding 1.4, *Carr* teaches closing , for example, the first valve after opening the second valve when flowing fluid to both wells simultaneously. Thus, selectively directing fluid to multiple wells that includes first-fourth wells would include closing the first valve to a first well after opening both the second and fourth valves to their associated wells and/or closing the third valve to a third well after opening both the second and fourth valves to their associated wells.

348. To the extent that the Board finds that *Carr* does not explicitly disclose this limitation, the method claimed in Claim Limitation 3.1 would have been obvious to a POSITA in light of the teachings of *Carr* along with the knowledge of a POSITA for the same reasons as those discussed regarding 1.3-1.4. Performing the method of Claim 1 on additional wells in the same environment (*i.e.*, third and fourth wells and third and fourth valve) would be performed in the same way and produce the same expected results as the first and second well and therefore would have been obvious to a POSITA.

349. Further, a POSITA would have found that any valve sequencing (*e.g.*, opening one valve before or after another valve is closed) obvious "in light of fluid

[226] Ex. 1004 at [0033].

flow targets" for each well in the multi-well system.[227] In other words, a POSITA would have understood from the teachings of *Carr* that the individual valves associated with individual wells of a grouping of multiple wells would be opened or closed in response to a fluid flow rate.[228] As such that the exact sequencing of the valves between wells would vary depending on the measured flow rates, and therefore, in some examples, the first valve is closed after opening both the second valve and the fourth valve.

350. Additionally, Claim Limitation 3.1 is the first prong in an "and/or" Claim. Thus, because Claim Limitation 3.1 is disclosed by *Carr*, Claim 3 as a whole is anticipated by *Carr*, or at least rendered obvious by *Carr*. Further, as discussed below, *Carr* discloses the second prong of the "and/or" statement contained in 3.2.

b. <u>3.2: "the third valve is closed after opening both the second valve and the fourth valve."</u>

351. Claim Limitation 3.2 merely provides another option for the sequence of opening and closing valves. As discussed above with respect to Claim Limitation 3.1, *Carr* discloses monitoring flow data to control valve positions for *multiple wells*, and controlling valve positions to selectively direct fluid to multiple wells would

[227] Ex. 1004 at [0035].

[228] Ex. 1004 at [0057]-[0060].

include closing the third valve to a third well after opening both the second and fourth valves for at least the reasons discussed with respect to Claim Limitation 3.1.

352. Accordingly, *Carr* discloses the limitations of 3.2.

353. To the extent that the Board finds that *Carr* does not explicitly disclose this limitation, the method claimed in Claim Limitation 3.2 would have been obvious to a POSITA in light of the teachings of *Carr* along with the knowledge of a POSITA for the same reasons as those discussed regarding 1.3-1.4. Performing the method of Claim 1 on additional wells in the same environment (*i.e.*, third and fourth wells and third and fourth valve) would be performed in the same way and produce the same expected results as the first and second well and therefore would have been obvious to a POSITA. Further, a POSITA would have found that any valve sequencing (*e.g.*, opening one valve before or after another valve is closed) obvious "in light of fluid flow targets" for each well in the multi-well system.[229]

354. Because *Carr* discloses each and every limitation of Claim 3, Claim 3 is anticipated by *Carr*, or in the alternative, obvious over *Carr* alone for the reasons discussed above.

[229] Ex. 1004 at [0035].

D. DEPENDENT CLAIM 4

355. Dependent Claim 4 depends from Claim 1. In addition to the disclosure of the limitations of Claim 1 discussed above, *Carr* discloses the limitations of Claim 4:

a. 4: "4. The method of claim 1, wherein the one or more conditions include one or more flow rate conditions."

356. *Carr* discloses this limitation. As discussed above regarding Claim 1.1, *Carr* discloses the use of flowmeters to "provide an operator and or a control system **112** with flow rate and total flow information. Advantageously, the first flow meter **140** and the second flow meter **152** can provide flow information about each flow to the first well **140** and the second well **142** for precise measurement and regulation."[230] Further, *Carr* discloses the use of the flow data (*e.g.*, flowrate, total flow information) to "control the position of the first valve **470**, second valve **472**, by utilizing flow data from the flow meters **150**, **152** in light of fluid flow targets for the first well **140** and/or second well **142**."[231] A POSITA would have immediately recognized flow data including flow rate and total flow information to be a fluid condition. Further, a POSITA would have immediately recognized that action takes place (i.e., control the position of valves **470**, **472**) in response to the flow condition.

[230] Ex. 1004 at [0023].

[231] Ex. 1004 at [0035].

Carr also says that the action is taken in light of fluid flow targets.[232] Accordingly, *Carr* discloses the "fluid condition" that is met is a flow rate.

357. Accordingly, *Carr* discloses the limitations of Claim 4, and therefore anticipates Claim 4, or in the alternative, renders obvious Claim 4.

E. DEPENDENT CLAIM 5

358. Dependent Claim 5 depends from Claim 4, which depends from Claim 1. In addition to the disclosure of the limitations of Claim 4 discussed above, *Carr* discloses the additional limitations of Claim 5:

a. 5: "5. The method of claim 4, wherein the fluid communicated via the manifold has satisfied the one or more flow rate conditions when a flow rate of the fluid is below an upper threshold, above a lower threshold, or both."

359. This claim limitation merely sets forth optional flow rate measurements, including flow rates below an upper flow rate threshold, or above a lower flow rate threshold, or both, and thus only one needs to be shown in the prior art. As discussed above regarding Claim 1.1, *Carr* teaches opening and closing valves "by utilizing flow data from the flow meters **150**, **152** in light of fluid flow targets for the first well **140** and/or second well **142**."[233] A POSITA would have recognized that "fluid flow targets" is plural and sets a "target" or value required for

[232] Ex. 1004 at [0035].

[233] Ex. 1004 at [0035].

fluid flow rate (*i.e.*, a threshold) as measured by the flow meters in order to control one or more valves. *Carr* also describes the control system **112** as being used to adjust the output of the pumps **130** by utilizing flow data from the first flow meter **150** and the second flow meter **152** in light of fluid flow targets for the first well **140** and/or the second well.[234] Accordingly, *Carr* clearly discloses that the valves are opened or closed based on the fluid rate conditions of fluid communicated from the pumps and therefore through the manifold and valves to the wells. A POSITA would have equated flow rate "targets" with flow rate "thresholds". The method of *Carr* would close a valve when it determined flowrate was above a lower target (i.e. threshold) and open the valve when it determined flowrate is below an upper target (i.e. threshold).

360. To the extent that the Board finds that *Carr* does not explicitly disclose "threshold" limitations, it would have been obvious to have an upper target (i.e. threshold) and/or a lower target based on *Carr*'s disclosure of adjusting valves by using flow dates from flow meters in light of fluid flow targets for each of the wells.[235] The terms of the Claim merely state that a fluid is below the upper target, above a lower target, or both. In other words, the fluid is in a desired flow condition. Accordingly, the limitation of Claim 5 would have been obvious to a POSITA in

[234] Ex. 1004 at [0025].

[235] Ex. 1004 at [0035].

light of the teachings of *Carr* regarding opening and closing valves in light of fluid flow targets.

361. Accordingly, *Carr* discloses the limitations of Claim 5, and therefore anticipates Claim 5, or in the alternative, renders obvious Claim 5.

F. DEPENDENT CLAIM 6

362. Dependent Claim 6 depends from Claim 4, which depends from Claim 1. In addition to the disclosure of the limitations of Claims 1 and 4 discussed above, *Carr* discloses the additional limitations of Claim 6:

a. **6. The method of claim 5, wherein the fluid communicated via the manifold has not satisfied the one or more flow rate conditions when a flow rate of the fluid is above an upper threshold or below a lower threshold.**

363. Claim 6 essentially defines the portion excluded by Claim 5. In other words, Claim 6 merely says that if the flow rates conditions in Claim 5 are not met, then the flow rate measured "has not been satisfied." Thus, this Claim does not add anything more technically to Claim 5 other than the use of the phrase "not met." Because *Carr* discloses meeting certain flow rate thresholds, as discussed above with respect to Claim 5, *Carr* also discloses that when the flow rate does not meet the desired threshold, whether it's above an upper threshold or lower than a lower threshold, the measured flow rate "has not satisfied the one or more flow rate conditions." Moreover, this is standard practice for any flow system – if a measured flow rate is outside the required flow rate, then a flow rate condition is not met.

364. Accordingly, *Carr* discloses the limitations of Claim 6, and therefore anticipates Claim 6, or in the alternative, renders obvious Claim 6.

G. DEPENDENT CLAIM 7

365. Dependent Claim 7 depends from Claim 1. In addition to the disclosure of the limitations of Claim 1 discussed above, *Carr* discloses the additional limitations of Claim 7:

a. 7: "7. The method of claim 1, further comprising: pumping the fluid into the manifold."

366. *Carr* discloses this limitation. As discussed regarding Claim 1, *Carr* discloses "in some embodiments, the mixed or manufactured fluid from the mixing blender **108** can be pumped simultaneously to the first well **140** [annotated in blue] and the second well **142** via a manifold **120**.[annotated in green]" [236]

[236] Ex. 1004 at [0021].

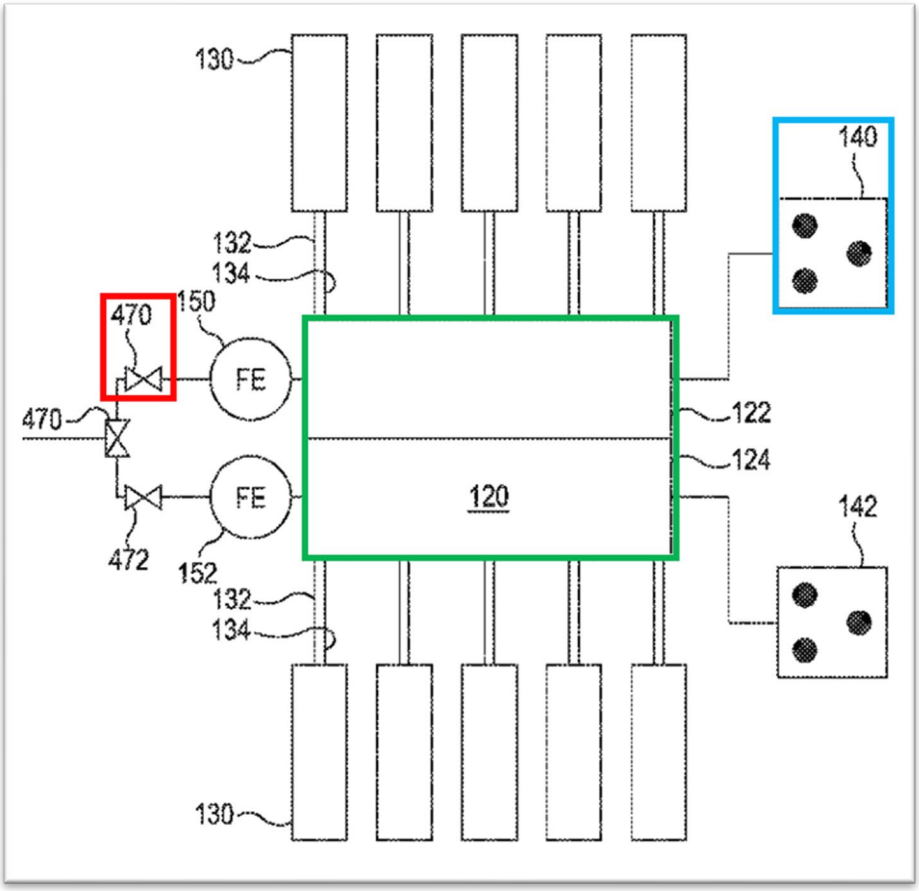

367. Accordingly, *Carr* discloses the limitations of Claim 7, and therefore *Carr* anticipates Claim 7, or in the alternative, renders obvious Claim 7.

H. <u>INDEPENDENT CLAIM 8</u>

368. Dependent Claim 8 depends from Claim 1. In addition to the disclosure of the limitations of Claim 1 discussed above, *Carr* discloses the additional limitations of Claim 8:

a. 8: "8. The method of claim 1, further comprising: determining that the fluid communicated via the manifold has satisfied the one or more conditions."

369. *Carr* discloses this limitation. The limitation is a portion of the limitation claimed in 1.2. As discussed with respect to Claim Limitation 1.2, *Carr* discloses the use of flow meters to "provide flow information about each flow" to the wells.[237] *Carr* further discloses using flow data from the meters and comparing it to fluid flow targets for the wells.[238] Thus, *Carr* discloses determining that the fluid communicated via the manifold has satisfied the one or more conditions. Accordingly, *Carr* discloses the limitations of Claim 8 as discussed here and for at least the same reasons as those discussed above regarding 1.2 in Section XII.A.b.

370. Thus, *Carr* anticipates Claim 8, or in the alternative, renders obvious Claim 8.

I. DEPENDENT CLAIM 9

371. Dependent Claim 9 depends from Claim 8, which depends from Claim 1. In addition to the disclosure of the limitations of Claims 1 and 8 discussed above, *Carr* discloses the additional limitations of Claim 9:

[237] Ex. 1004 at [0023].

[238] Ex. 1004 at [0035].

a. **9. The method of claim 8, wherein determining that the fluid communicated via the manifold has satisfied the one or more flow rate conditions comprises determining that a flow rate of the fluid is below an upper threshold, above a lower threshold, or both.**

372. Except for depending from Claim 8, Claim 9 is identical to Claim 5 and the limitations of Claim 9 are disclosed by *Carr* for the same reasons as those described above regarding Claim 5 in Section XII.E. Accordingly, *Carr* anticipates Claim 9, or in the alternative, renders obvious Claim 9.

J. DEPENDENT CLAIM 10

373. Dependent Claim 10 depends from Claim 1. In addition to the disclosure of the limitations of Claim 1 discussed above, *Carr* discloses the additional limitations of Claim 10:

a. **10: "10. The method of claim 1, wherein the fluid communicated via the manifold is hydraulic fracturing fluid."**

374. *Carr* discloses the limitations of Claim 10. *Carr* discloses "treatment or fracturing fluid flows from a centralized location 105 to the first well 140 and the second well second 142 via the manifold 120".[239]

375. Accordingly, *Carr* discloses the limitations of Claim 10, and therefore *Carr* anticipates Claim 10, or in the alternative, renders obvious Claim 10.

[239] Ex. 1004 at [0023].

K. DEPENDENT CLAIM 11

376. Dependent Claim 11 depends from Claim 1. In addition to the disclosure of the limitations of Claim 1 discussed above, *Carr* discloses the additional limitations of Claim 11:

a. "11. The method of claim 1, wherein: the first valve is a first zipper valve; and/or the second valve is a second zipper valve."

377. *Carr* discloses this limitation. *Carr* discloses a well treatment facility that "allows for fluids for treatment, stimulation, fracturing, or other well operations to be manufactured, formed and/or mixed at a centralized location **105** prior to being transferred to the first well **140** and the second well **142**."[240] *Carr*'s facility includes individual valves associated with a manifold and individual wells to control fluid flow to each of the wells.[241] *Carr* also discloses that the valves may be part of the manifold directing flow to the wells.[242] A POSITA would have immediately recognized the method of *Carr* to be a "zipper frac" operation where wells are fractured either sequentially or simultaneously. This was a well-know process long before the '770 Patent.[243]

---

[240] Ex. 1004 at [0017].

[241] Ex. 1004 at [0021]-[0022], Fig. 5.

[242] Ex. 1004 at [0023].

[243] *See*, *e.g.*, IX.D.

378. A POSITA would have understood a "zipper valve" to simply be a valve used in a zipper fracturing operation, typically between a discharge manifold (*e.g.*, a zipper manifold) and the wellhead. These valves would be used to swap fracturing operations from one wellhead to another as described above in Section IX.D. The '770 Patent contains little written description of the structure of a "zipper valve" other than indicating zipper valves may be, for example, gate valves, and communicate fluid between the zipper manifold and a well.[244] The figures of the '770 Patent show a "zipper valve" consistent with the general knowledge of a POSITA.

379. According to the '770 Patent, "[r]eferring to Figs. 2A through 2G, … the zipper valves **170a-b** (such as, for example, gate valves) operably coupled to, and adapted communicate fluid between, the zipper manifold **145** [annotated in blue] and the well **105A** [annotated in green]."[245] Fig 2A is duplicated and annotated below. A POSITA would have immediately recognized that "gate valves" were a well-known type of valve which had been used in O&G operations, including fracturing, for decades before the '770 Patent.

[244] Ex. 1001 at 7:60-63, 14:9-11, 23-26, 30-34, and 43-48.

[245] Ex. 1001 at 7:47-8:5.

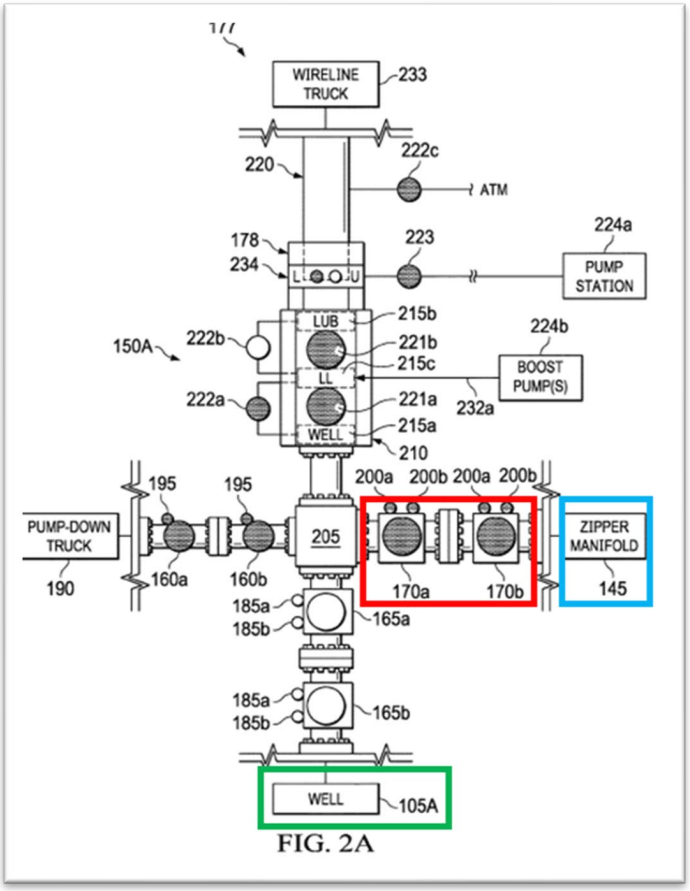

FIG. 2A

380. Thus, for the same reasons that *Carr* discloses first and second valves (*see* Claim 1), *Carr* discloses zipper valves just like those described in the '770 Patent. Carr discloses valves associated with a discharge manifold that directs flow to the various wells during a zipper frac operation. For example, in Fig.1 of *Carr*, valves 470 and 472 are associated with manifold 120 and direct flow to wells 140 and 142.

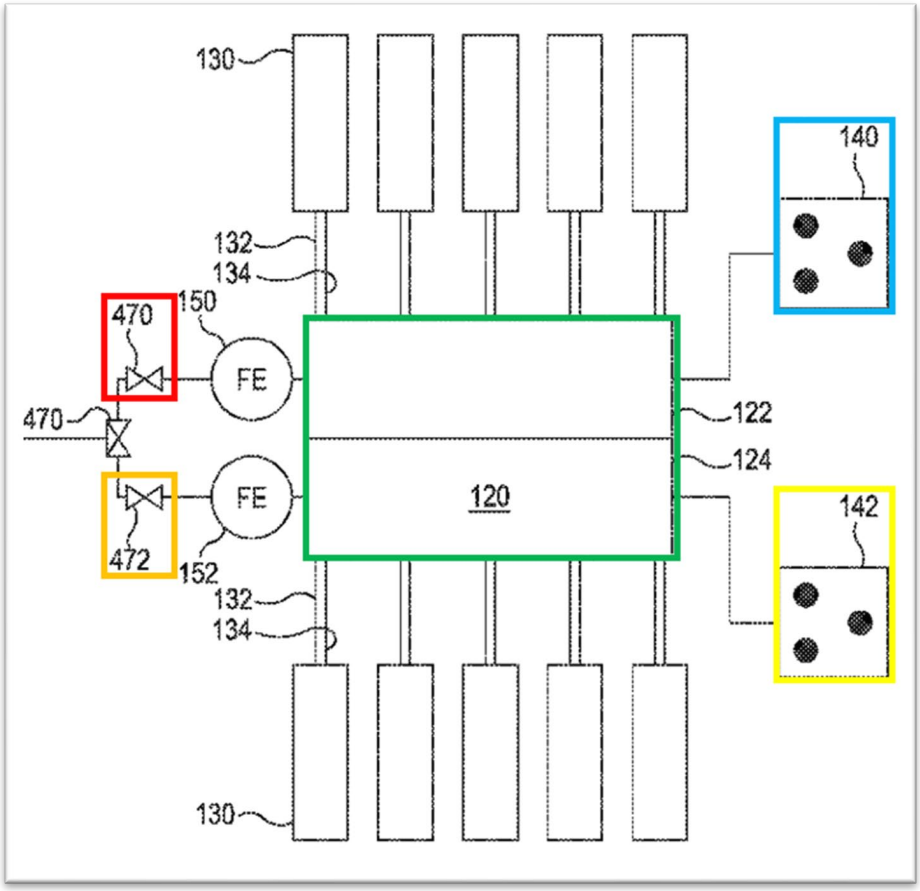

381. *Carr* teaches "in some embodiments, the mixed or manufactured fluid from the mixing blender **108** can be pumped simultaneously to the first well **140** [annotated in blue] and the second well **142** via a manifold **120**.[annotated in green]."[246] Further, *Carr* discloses that the fluid going to the well is controlled by valves: "The first valve **470** [annotated in red] can be utilized to control the flow from the mixing blender **108** to the first well **140** and the second valve **472** [annotated in orange] can be utilized to control the flow from the mixing blender

[246] Ex. 1004 at [0021].

108 to the second well **142.**[annotated in yellow]"[247] Further, *Carr* teaches "the first valve **470** and the second valve **472** can allow for the first well **140** and the second well **142** to each by stimulated individually by opening the respective first valve **470** or the second valve **472** and closing the other valves. Further, in some embodiments, the first valve **470** and the second valve **472** can be used to control the flow rate to the first well **140**, the second well **142**, or to both the first well **140** and the second well **142** simultaneously."[248] This disclosure is describing a zipper frac operation and valves **470** and **472** to be "zipper valves".

382. To the extent that the Board determines that *Carr* does not explicitly disclose zipper valves, it would have been obvious for a POSITA to include "zipper valves" (e.g. gate valves) on the manifold to facilitate the fracturing operations of the wells, as was well known in the art.[249]

383. Accordingly, *Carr* discloses the limitations of Claim 11, and therefore *Carr* anticipates Claim 11, or in the alternative, renders obvious Claim 11 for the reasons discussed above.

---

[247] Ex. 1004 at [0033].

[248] Ex. 1004 at [0033].

[249] *See*, *e.g.*, Section IX.D.

L. DEPENDENT CLAIM 12

384. Dependent Claim 12 depends from Claim 1. In addition to the disclosure of the limitations of Claim 1 discussed above, *Carr* discloses the additional limitations of Claim 12:

a. 12.1: "12. The method of claim 1, wherein the second valve is associated with both the manifold and the second well; and"

385. *Carr* discloses this limitation. *Carr* teaches "in some embodiments, the mixed or manufactured fluid from the mixing blender **108** can be pumped simultaneously to the first well **140** [annotated in blue] and the second well **142** [annotated in yellow] via a manifold **120** [annotated in green]."[250] Further, *Carr* discloses that the fluid going to the well is controlled by valves: "The first valve **470** [annotated in red] can be utilized to control the flow from the mixing blender **108** to the first well **140** and the second valve **472** [annotated in orange] can be utilized to control the flow from the mixing blender **108** to the second well **142.**"[251] Further, *Carr* teaches "the first valve **470** and the second valve **472** can allow for the first well **140** and the second well **142** to each by stimulated individually by opening the respective first valve **470** or the second valve **472** and closing the other valves. Further, in some embodiments, the first valve **470** and the second valve **472** can be

[250] Ex. 1004 at [0021].

[251] Ex. 1004 at [0033].

used to control the flow rate to the first well **140**, the second well **142**, or to both the first well **140** and the second well **142** simultaneously."[252]

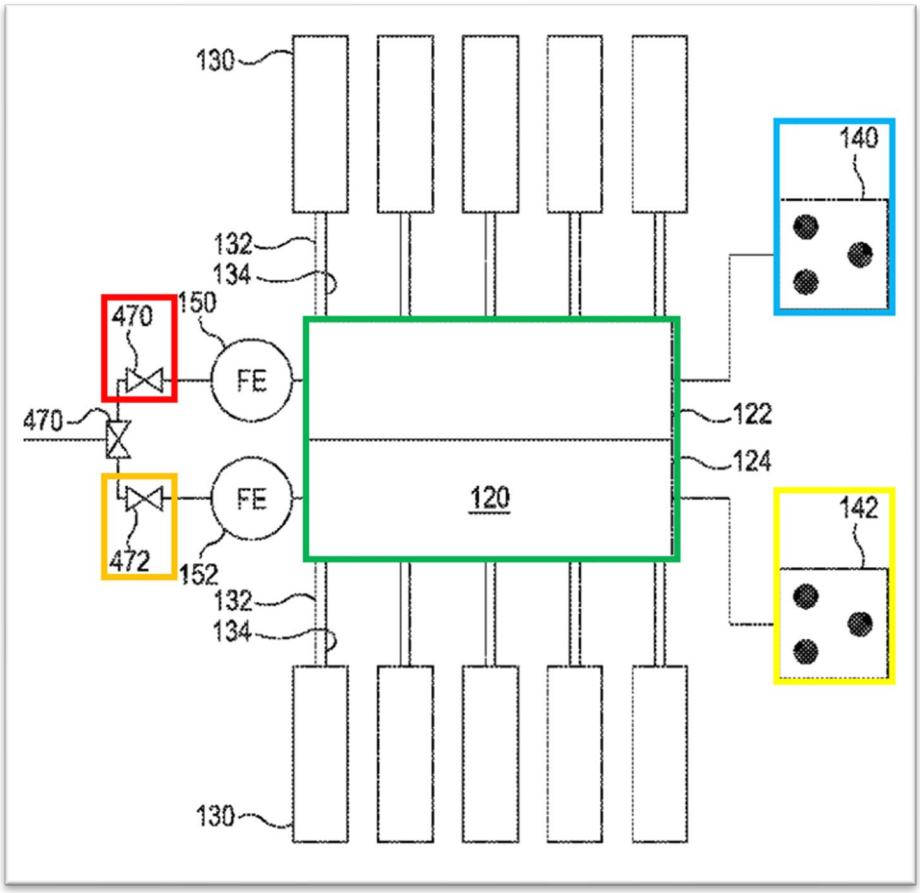

Carr, Fig. 1 excerpted and annotated

386. Accordingly, *Carr* teaches communicating fluid to second well **142** via a manifold **120** and a second valve **472**. As seen in Fig. 1, and discussed in the text, second valve **472** is associated with both well **142** and manifold **122**.

387. Thus, *Carr* discloses the limitations of 12.1.

[252] Ex. 1004 at [0033].

b. <u>12.2: "wherein communicating fluid to the second well via the second valve comprises communicating fluid to the second well via the manifold and the second valve."</u>

388. As discussed above regarding 12.1, *Carr* teaches communicating fluid to second well **142** via a manifold **120** and a second valve **472**. Accordingly, *Carr* discloses the limitations of 12.2.

389. Because *Carr* discloses each and every limitation of Claim 12, *Carr* anticipates Claim 12, or in the alternative, renders obvious Claim 12 for the reasons discussed above.

M. <u>DEPENDENT CLAIM 13</u>

390. Dependent Claim 13 depends from Claim 12, which depends from Claim 1. In addition to the disclosure of the limitations of Claims 1 and 12 discussed above, *Krupa* discloses the additional limitations of Claim 13:

a. <u>"13. The method of claim 12, wherein the fluid communicated via the manifold is hydraulic fracturing fluid."</u>

391. With the exception of depending from Claim 12, the limitation of Claim 13 is identical to that of Claim 10. Accordingly, *Carr* discloses the limitations of Claim 12 for the same reasons as those discussed regarding Claim 10 in Section XII.J above.

N. INDEPENDENT CLAIM 14

392. It is my opinion that *Carr* anticipates or, in the alternative, renders obvious Claim 14 of the '770 Patent. Details regarding the specific disclosures of *Carr* are contained in the subsections following. To the extent the Board determines that *Carr* does not explicitly disclose the limitations of Claim 14, a POSITA would have found the apparatus of Claim 14 to be obvious in light of the disclosure and teachings of *Carr*.

a. 14.1 : "An apparatus comprising: a non-transitory computer readable medium; and a plurality of instructions stored on the non-transitory computer readable medium and executable by one or more processors, wherein, when the instructions are executed by the one or more processors, the following steps are executed:"

393. *Carr* discloses this limitation. *Carr* discloses a "control system **112**" in which "the operations of the chemical storage system **106**, hydration blender **102**, proppant storage system **110**, mixing blender **108**, manifold **120**, and/or pumps **130** are controlled, coordinated, and monitored by a central control system **112**."[253] Further, *Carr* discloses "in some embodiments, the control system **112** can be utilized to control the position of the first valve **470**, second valve **472**, and/or the proportioning valve **474** by utilizing flow data from the first flow meter **150** and the second flow meter **152** in light of fluid flow targets for the first well **140** and/or the

[253] Ex. 1004 at [0025].

second well **142**."[254] *Carr* also discloses that information, such as proppant tank information, mass and/or volumetric flow rates of fluid, can be transmitted to a controller, control area, display and/or control system **112**.[255] Such a control system that controls, coordinates, and monitors well operations, as well as receives transmitted data, would have been understood by a POSITA at the time of filing the priority application that lead to the '770 Patent as describing typical computing systems that include instructions for receiving and transmitting information, controlling, coordinating, and monitoring operations, which would have been stored on a computer readable medium and executed by a processor, as these are basic, common features of a control system at the time of the '770 Patent. Accordingly, *Carr* discloses this limitation.

394. Furthermore, at the time of the '770 Patent, a POSITA would have found it obvious to use a computerized control system which contained non-transitory computer readable media (*e.g.*, a hard drive or memory) containing instructions (*e.g.*, program) that are executed by the processors as at least part of control system **112** as such computerized control systems were well-known long before the time of the '770 Patent and *Carr* discloses a control system for controlling, coordinating, and monitoring operations as well as receiving data. This is

[254] Ex. 1004 at [0035].

[255] Ex. 1004 at [0020], [0024].

particularly true of a control system that monitored and controlled such a wide variety of equipment such as chemical storage, proppant, blender, pumps, discharge valves as the control system 112 of *Carr*.

395. The apparatus limitations claimed in 14.1 would have been obvious to a POSITA in light of the teachings of *Carr* along with the knowledge of a POSITA. These claim limitations refer to an off-the shelf computing system which was well known long before the '770 Patent. Furthermore, it is my understanding that the application of a generic computer system to perform well-known functions (such as the rest of the claimed limitations of Claim 14) is not eligible Patent material.

396. Accordingly, *Carr* discloses the limitations of 14.1, or in the alternative, renders obvious Claim Limitation 14.1 in light of the teachings of *Carr* regarding control system 112.

b. <u>14.2: "communicating fluid to a first well via a manifold and a first valve, the first valve being associated with both the manifold and the first well; and"</u>

397. *Carr* discloses this limitation. As discussed above regarding Claim Limitation 14.1, *Carr* discloses a control system for controlling, coordinating, and monitoring well operations, which would include the step recited in Claim Limitation 14.2. The limitations of 14.2 are identical to Claim Limitation 1.1 discussed above. Thus, the Claim Limitation 14.2 is disclosed by *Carr* at least for

the same reasons as those discussed above regarding Claim Limitation 1.1 in Section XII.A.a.

c. <u>14.3: "in response to determining that the fluid communicated via the manifold has satisfied one or more conditions:"</u>

398. As discussed above regarding Claim Limitation 14.1, *Carr* discloses a control system for controlling, coordinating, and monitoring well operations, which would include the step recited in Claim Limitation 14.3. The limitations of 14.3 are identical to the limitations of 1.2 discussed above. Thus, the limitations of 14.3 are disclosed by *Carr* at least for the same reasons as those discussed above regarding 1.2 in Section XII.A.b.

d. <u>14.4: "opening a second valve; communicating fluid to a second well via the second valve; and"</u>

399. As discussed above regarding Claim Limitation 14.1, *Carr* discloses a control system for controlling, coordinating, and monitoring well operations, which would include the step recited in Claim Limitation 14.4. The limitations of 14.4 are identical to the limitations of 1.3 discussed above. Thus, the limitations of 14.4 are disclosed by *Carr* at least for the same reasons as those discussed above regarding 1.3 in Section XII.A.c.

e. <u>14.5: "closing the first valve after opening the second valve."</u>

400. As discussed above regarding Claim Limitation 14.1, *Carr* discloses a control system for controlling, coordinating, and monitoring well operations, which would include the step recited in Claim Limitation 14.5. The limitations of 14.5 are identical to the limitations of 1.4 discussed above. Thus, the limitations of 14.5 are disclosed by *Carr* at least for the same reasons as those discussed above regarding 1.4 in Section XII.A.d.

401. Because *Carr* discloses each and every limitation of Claim 14, *Carr* anticipates Claim 14, or in the alternative, renders obvious Claim 14 for the reasons discussed above.

O. <u>DEPENDENT CLAIM 15</u>

402. Dependent Claim 15 depends from Claim 14. In addition to the disclosure of the limitations of Claim 14 discussed above, *Carr* discloses the additional limitations of Claim 15:

a. <u>15.1: "15. The apparatus of claim 14, wherein, when the instructions are executed by the one or more processors, the following steps are also executed: communicating fluid to a third well via the manifold and a third valve, the third valve being associated with both the manifold and the third well; and"</u>

403. As discussed above regarding Claim Limitation 14.1, *Carr* discloses a control system for controlling, coordinating, and monitoring well operations, which

would include the step recited in Claim Limitation 15.1. With the exception of being an apparatus claim and depending from Claim 14, the step limitations of 15.1 are substantially similar to those of 2.1 discussed above. Thus, the limitations of 15.1 are disclosed by *Carr* at least for the same reasons as those discussed above regarding Claim Limitation 2.1 in Section XII.B.a.

b. <u>15.2: "in response to determining that the fluid communicated via the manifold has satisfied the one or more conditions:"</u>

404. With the exception of being an apparatus claim and depending from Claim 14, the limitations of 15.2 are identical to those of 2.2 discussed above. Thus, the limitations of 15.2 are disclosed by *Carr* at least for the same reasons as those discussed above regarding 2.2 in Section XII.B.b.

c. <u>15.3-15.4: "opening a fourth valve; communicating fluid to a fourth well via the fourth valve; and"</u>

405. With the exception of being an apparatus claim and depending from Claim 14, the limitations of 15.3 and 15.4 are identical to those of 2.3 and 2.4 discussed above. Thus, the limitations of 15.3 and 15.4 are disclosed by *Carr* at least for the same reasons as those discussed above regarding 2.3 and 2.4 in Sections XII.B.c and XII.B.d.

d. 15.5: "closing the third valve after opening the fourth valve."

406. With the exception of being an apparatus claim and depending from Claim 14, the limitations of 15.5 are identical to those of 2.5 discussed above. Thus, the limitations of 15.5 are disclosed by *Carr* at least for the same reasons as those discussed above regarding 2.5 in Section XII.B.e.

407. Because *Carr* discloses each and every limitation of Claim 15, *Carr* anticipates Claim 15, or in the alternative, renders obvious Claim 15 for the reasons discussed above.

P. DEPENDENT CLAIM 16

408. Dependent Claim 16 depends from Claim 15. In addition to the disclosure of the limitations of Claim 15 discussed above, *Carr* discloses the additional limitations of Claim 16:

a. 16[a]: "16. The apparatus of claim 15, wherein: the first valve is closed after opening both the second valve and the fourth valve; and/or"

409. With the exception of being an apparatus claim and depending from Claim 15, the limitations of 16.1 are identical to those of 3.1 discussed above. Thus, the limitations of 16.1 are disclosed by *Carr* at least for the same reasons as those discussed above regarding 3.1 in Section XII.C.a.

b. <u>16.2: "the third valve is closed after opening both the second valve and the fourth valve."</u>

410. With the exception of being an apparatus claim and depending from Claim 15, the limitations of 16.2 are identical to those of 3.2 discussed above. Thus, the limitations of 16.2 are disclosed by *Carr* at least for the same reasons as those discussed above regarding 3.2 in Section XII.C.b.

411. Because *Carr* discloses each and every limitation of Claim 16, *Carr* anticipates Claim 16, or in the alternative, renders obvious Claim 16 for the reasons discussed above.

Q. <u>DEPENDENT CLAIM 17</u>

412. Dependent Claim 17 depends from Claim 14. In addition to the disclosure of the limitations of Claim 17 discussed above, *Carr* discloses the limitations of Claim 14:

a. <u>17. The apparatus of claim 14, wherein the one or more conditions include one or more flow rate conditions.</u>

413. With the exception of being an apparatus claim and depending from Claim 14, the limitations of Claim 17 are identical to those of Claim 4 discussed above. Thus, the limitations of Claim 17 are disclosed by *Carr* at least for the same reasons as those discussed above regarding Claim 4 in Section XII.D. Accordingly, *Carr* anticipates Claim 17, or in the alternative, renders obvious Claim 17 for the reasons discussed above.

R. DEPENDENT CLAIM 18

414. Dependent Claim 18 depends from Claim 17, which depends from Claim 4. In addition to the disclosure of the limitations of Claims 14 and 17 discussed above, *Carr* discloses the additional limitations of Claim 18:

> **a. 18. The apparatus of claim 17, wherein the fluid communicated via the manifold has satisfied the one or more flow rate conditions when a flow rate of the fluid is below an upper threshold, above a lower threshold, or both.**

415. With the exception of being an apparatus claim and depending from Claim 17, the limitations of Claim 18 are identical to those of Claim 5 discussed above. Thus, the limitations of Claim 18 are disclosed by *Carr* at least for the same reasons as those discussed above regarding Claim 5 in Section XII.E. Accordingly, *Carr* anticipates Claim 18, or in the alternative, renders obvious Claim 18 for the reasons discussed above.

S. DEPENDENT CLAIM 19

416. Dependent Claim 19 depends from Claim 17, which depends from Claim 14. In addition to the disclosure of the limitations of Claims 14 and 17 discussed above, *Carr* discloses the additional limitations of Claim 19:

a. **19. The apparatus of claim 17, wherein the fluid communicated via the manifold has not satisfied the one or more flow rate conditions when a flow rate of the fluid is above an upper threshold or below a lower threshold.**

417. With the exception of being an apparatus claim and depending from Claim 17, the limitations of Claim 19 are identical to those of Claim 6 discussed above. Thus, the limitations of Claim 19 are disclosed by *Carr* at least for the same reasons as those discussed above regarding Claim 6 in Section XII.F. Accordingly, *Carr* anticipates Claim 19, or in the alternative, renders obvious Claim 19 for the reasons discussed above.

T. DEPENDENT CLAIM 20

418. Dependent Claim 20 depends from Claim 14. In addition to the disclosure of the limitations of Claim 14 discussed above, *Carr* discloses the additional limitations of Claim 20:

a. **20. The apparatus of claim 14, wherein, when the instructions are executed by the one or more processors, the following step is also executed: pumping the fluid into the manifold.**

419. As discussed above regarding Claim Limitation 14.1, *Carr* discloses a control system for controlling, coordinating, and monitoring well operations, which would include the step recited in Claim Limitation 20 ("operations of … pumps 130 are controlled, coordinated, and monitored by a central control system 112"[256]).

[256] Ex. 1004 at [0025].

With the exception of being an apparatus claim and depending from Claim 14, the limitations of Claim 20 are identical to those of Claim 7 discussed above. Thus, the limitations of Claim 20 are disclosed by *Carr* at least for the same reasons as those discussed above regarding Claim 7 in Section XII.G. Accordingly, *Carr* anticipates Claim 20, or in the alternative, renders obvious Claim 20 for the reasons discussed above.

U. DEPENDENT CLAIM 21

420. Dependent Claim 21 depends from Claim 14. In addition to the disclosure of the limitations of Claim 14 discussed above, *Carr* discloses the additional limitations of Claim 21:

a. **21. The apparatus of claim 14, wherein, when the instructions are executed by the one or more processors, the following step is also executed: determining that the fluid communicated via the manifold has satisfied the one or more conditions.**

421. As discussed above regarding Claim Limitation 14.1, *Carr* discloses a control system for controlling, coordinating, and monitoring well operations, which would include the step recited in Claim Limitation 21. For example, *Carr* discloses that the "central control system **112** may utilize sensor data including information from the first flow meter **150** and the second flow meter **152** as well as operating parameters from the chemical storage system **106**, hydration blender **102**, proppant storage system **110**, mixing blender **108**, manifold **120**, and pumps **130** to identify

operation of the well treatment facility **100**."[257] Further, *Carr*'s control system **112** can be used to "control the position of the first valve **470**, second valve **472**, and/or the proportioning valve **474** by utilizing flow data from the first flow meter **150** and the second flow meter **152** in light of fluid flow targets for the first well **140** and/or the second well **142**."[258] Moreover, with the exception of being an apparatus claim and depending from Claim 14, the limitations of Claim 21 are identical to those of Claim 8 discussed above. Thus, the limitations of Claim 21 are disclosed by *Carr* at least for the same reasons as those discussed above regarding Claim 8 in Section XII.H. Accordingly, *Carr* anticipates Claim 21, or in the alternative, renders obvious Claim 21 for the reasons discussed above.

V. DEPENDENT CLAIM 22

422. Dependent Claim 22 depends from Claim 21, which depends from Claim 14. In addition to the disclosure of the limitations of Claims 14 and 21 discussed above, *Carr* discloses the additional limitations of Claim 22:

[257] Ex. 1004 at [0025].

[258] Ex. 1004 at [0035].

a. **22. The apparatus of claim 21, wherein determining that the fluid communicated via the manifold has satisfied the one or more flow rate conditions comprises determining that a flow rate of the fluid is below an upper threshold, above a lower threshold, or both.**

423. With the exception of being an apparatus claim and depending from Claim 21, the limitations of Claim 22 are identical to those of Claim 9 discussed above. Thus, the limitations of Claim 22 are disclosed by *Carr* at least for the same reasons as those discussed above regarding Claim 9 in Section XII.I. Accordingly, *Carr* anticipates Claim 22, or in the alternative, renders obvious Claim 22 for the reasons discussed above.

W. DEPENDENT CLAIM 23

424. Dependent Claim 23 depends from Claim 15, which depends from claim 14. In addition to the disclosure of the limitations of Claims 14 and 15 discussed above, *Carr* discloses the additional limitations of Claim 23:

a. **23. The apparatus of claim 14, wherein the fluid communicated via the manifold is hydraulic fracturing fluid.**

425. With the exception of being an apparatus claim and depending from Claim 14, the limitations of Claim 23 are identical to those of Claim 10 discussed above. Thus, the limitations of Claim 23 are disclosed by *Carr* at least for the same reasons as those discussed above regarding Claim 10 in Section XII.J. Accordingly,

Carr anticipates Claim 23, or in the alternative, renders obvious Claim 23 for the reasons discussed above.

X. DEPENDENT CLAIM 24

426. Dependent Claim 24 depends from Claim 14. In addition to the disclosure of the limitations of Claim 14 discussed above, *Carr* discloses the additional limitations of Claim 24:

a. 24. The apparatus of claim 14, wherein: the first valve is a first zipper valve; and/or the second valve is a second zipper valve.

427. With the exception of being an apparatus claim and depending from Claim 14, the limitations of Claim 24 are identical to those of Claim 11 discussed above. Thus, the limitations of Claim 24 are disclosed by *Carr* at least for the same reasons as those discussed above regarding Claim 11 in Section XII.K. Accordingly, *Carr* anticipates Claim 24, or in the alternative, renders obvious Claim 24 for the reasons discussed above.

Y. DEPENDENT CLAIM 25

428. Dependent Claim 25 depends from Claim 14. In addition to the disclosure of the limitations of Claim 14 discussed above, *Carr* discloses the additional limitations of Claim 25:

a. 25.1: "25. The apparatus of claim 14, wherein the second valve is associated with both the manifold and the second well; and"

429. With the exception of being an apparatus claim and depending from Claim 14, the limitations of Claim Limitation 25.1 are identical to those of 12.1 discussed above. Thus, the limitations of Claim Limitation 25.1 are disclosed by *Carr* at least for the same reasons as those discussed above regarding 12.1 in Section XII.L.a.

b. 25.2: "wherein communicating fluid to the second well via the second valve comprises communicating fluid to the second well via the manifold and the second valve."

430. With the exception of being an apparatus claim and depending from Claim 14, the limitations of Claim 25.2 are identical to those of 12.2 discussed above. Thus, the limitations of Claim 25.2 are disclosed by *Carr* at least for the same reasons as those discussed above regarding 12.2 in Section XII.L.b.

431. Because *Carr* discloses each and every limitation of Claim 25, *Carr* anticipates Claim 25, or in the alternative, renders obvious Claim 25 for the reasons discussed above.

Z. DEPENDENT CLAIM 26

432. Dependent Claim 26 depends from Claim 25, which depends from Claim 14. In addition to the disclosure of the limitations of Claims 14 and 25 discussed above, *Carr* discloses the additional limitations of Claim 26:

a. 26. The apparatus of claim 25, wherein the fluid communicated via the manifold is hydraulic fracturing fluid."

433. With the exception of being an apparatus claim and depending from Claim 25, the limitations of Claim 26 are identical to those of 13 discussed above. Thus, the limitations of Claim 26 are disclosed by *Carr* at least for the same reasons as those discussed above regarding 13 in Section XII.M. Accordingly, *Carr* anticipates Claim 26, or in the alternative, renders obvious Claim 26 for the reasons discussed above.

AA. INDEPENDENT CLAIM 27

434. It is my opinion that *Carr* anticipates, or at least renders obvious, Claim 27 of the '770 Patent. Details regarding the specific disclosures of *Carr* are contained in the subsections following. To the extent the Board determines that *Carr* does not explicitly disclose the limitations of Claim 27, a POSITA would have found the system of Claim 27 to be obvious in light of the disclosure and teachings of *Carr*.

a. 27.1: "1. A system, comprising: a first valve via which fluid is communicated from a manifold to a first well;"

435. *Carr* discloses this limitation. *Carr* discloses a method of hydraulically fracturing a plurality of wells. The title of *Carr* is "Method and Apparatus for Metering Flow during Centralized Well Treatment."[259] A POSITA would have

[259] Ex. 1004 at Title.

recognized "centralized well treatment" to include hydraulic fracturing. *Carr* further describes "the well treatment facility **100** allows for fluids for treatment, stimulation, fracturing or other well operations to be manufactured…prior to being transferred to the first well **140** and the second well **142**"[260]

436. *Carr* teaches "in some embodiments, the mixed or manufactured fluid from the mixing blender **108** can be pumped simultaneously to the first well **140** [annotated in blue] and the second well **142** via a manifold **120** [annotated in green]."[261] Further, *Carr* discloses that the fluid going to the well is controlled by valves: "The first valve **470** [annotated in red] can be utilized to control the flow from the mixing blender **108** to the first well **140** and the second valve **472** can be utilized to control the flow from the mixing blender **108** to the second well **142.**"[262] Further, *Carr* teaches "the first valve **470** and the second valve **472** can allow for the first well **140** and the second well **142** to each by stimulated individually by opening the respective first valve **470** or the second valve **472** and closing the other valves. Further, in some embodiments, the first valve **470** and the second valve **472** can be

[260] Ex. 1004 at [0017].

[261] Ex. 1004 at [0021].

[262] Ex. 1004 at [0033].

used to control the flow rate to the first well **140**, the second well **142**, or to both the first well **140** and the second well **142** simultaneously."[263]

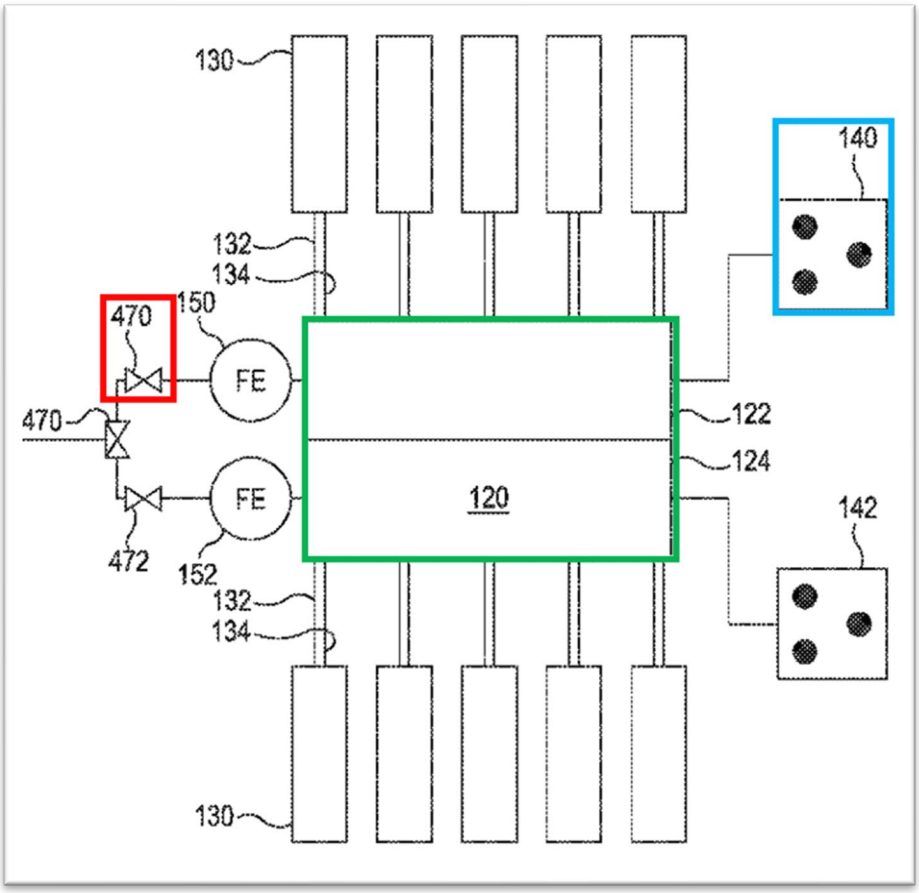

Carr, Fig. 1 excerpted and annotated

437. *Carr* further teaches that the location of the valves is not fixed. *Carr* discloses "[i]n some embodiments, the well treatment facility 400 can optionally include a first valve 470 disposed along the first isolated manifold path 122 and/or a second valve 472 disposed along the second isolated manifold path 124. The first

[263] Ex. 1004 at [0033].

valve 470 can be utilized to control the flow from the mixing blender 108 to the first well 140 and the second valve 472 can be utilized to control the flow from the mixing blender 108 to the second well 142. The first valve 470 and the second valve 472 can be disposed outside of the manifold 120 or disposed within the manifold 120."[264] *Carr* describes the valve(s) as being along the manifold path. This would include before the manifold, as shown in Fig. 1, inside the manifold, or after the manifold. Regardless of the location of the valve (before, in or after), the fluid is communicated from the manifold to the well by means of (via) the valve. The location of the valve would not change the function of the valve in controlling fluid to the well.

[264] Ex. 1004 at [0033].

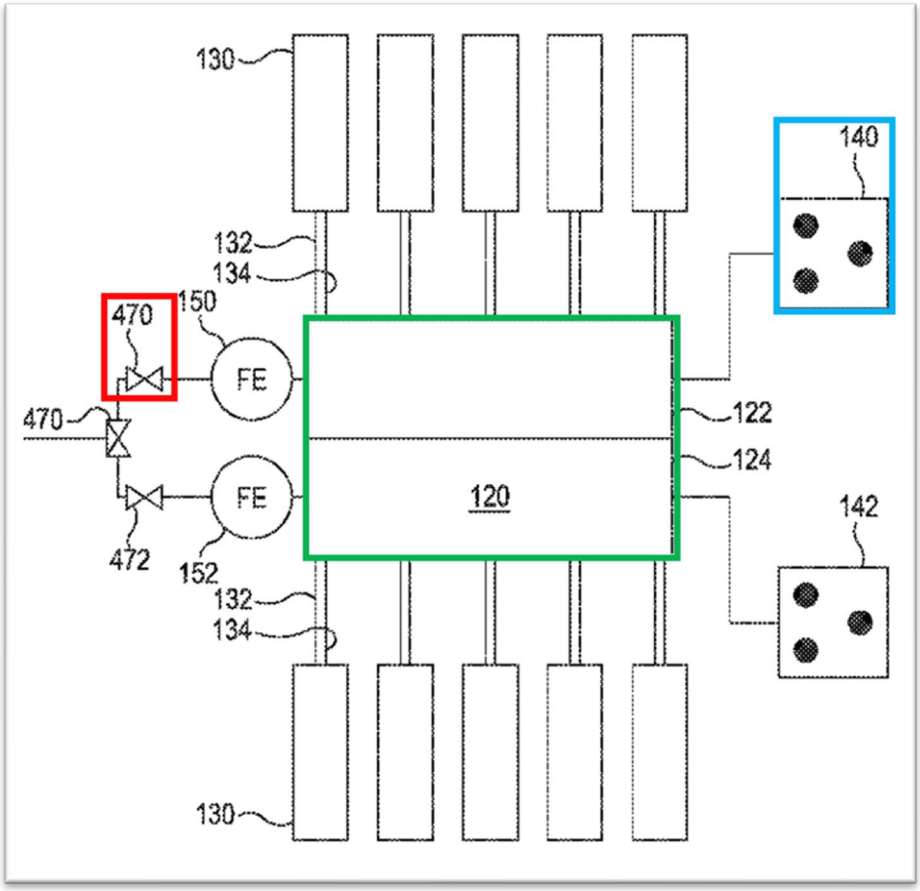

Carr, Fig. 1 excerpted and annotated

438. Accordingly, *Carr* discloses a first valve **470** through which fluid is communicated to first well **140** via (from) a manifold **120**. As seen in Fig. 1, and discussed in the text, first valve **470** is associated with both well **140** and manifold **120**.

439. Accordingly, *Carr* discloses the limitations of 27.1. To the extent the Board finds *Carr* does not explicitly disclose fluid from the manifold to the well via the valve, such a configuration of the valve, manifold and well would have been obvious to a POSITA in light of *Carr*'s teaching that the valve could be along the

manifold path, inside or outside the manifold, and basic knowledge regarding operation of valves and fluid flow.

b. <u>27.2: "a second valve via which fluid is adapted to be communicated to a second well; and"</u>

440. *Carr* discloses this limitation. *Carr* teaches "in some embodiments, the mixed or manufactured fluid from the mixing blender **108** can be pumped simultaneously to the first well **140** [annotated in blue] and the second well **142** [annotated in yellow] via a manifold **120** [annotated in green]."[265] Further, *Carr* discloses that the fluid going to the well is controlled by valves: "The first valve **470** [annotated in red] can be utilized to control the flow from the mixing blender **108** to the first well **140** and the second valve **472** [annotated in orange] can be utilized to control the flow from the mixing blender **108** to the second well **142**."[266] Further, *Carr* teaches "the first valve **470** and the second valve **472** can allow for the first well **140** and the second well **142** to each by stimulated individually by opening the respective first valve **470** or the second valve **472** and closing the other valves. Further, in some embodiments, the first valve **470** and the second valve **472** can be used to control the flow rate to the first well **140**, the second well **142**, or to both the first well **140** and the second well **142** simultaneously."[267]

---

[265] Ex. 1004 at [0021].

[266] Ex. 1004 at [0033].

[267] Ex. 1004 at [0033].

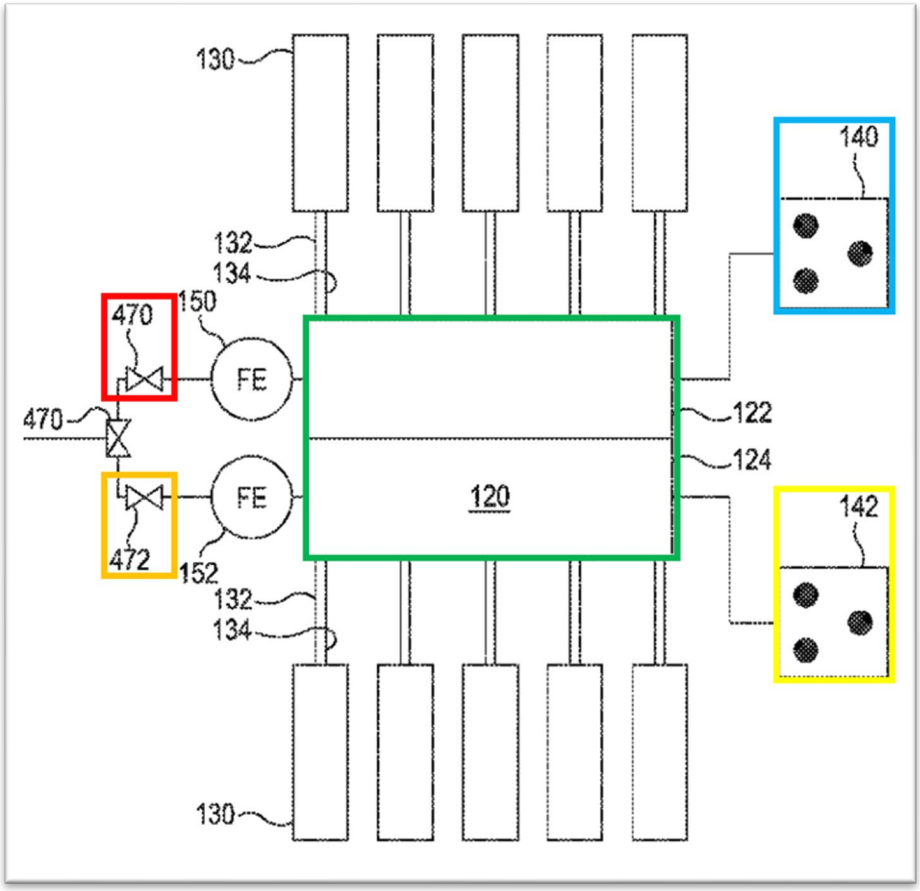

Carr, Fig. 1 excerpted and annotated

441. Accordingly, *Carr* teaches communicating fluid to second well **142** via a manifold **120** and a second valve **472**. As seen in Fig. 1, and discussed in the text, second valve **472** is associated with both well **142** and manifold **122**.

442. Thus, *Carr* discloses the limitations of 27.2.

c. <u>27.3: "one or more controllers, configured to:</u>

443. *Carr* discloses one or more controllers configured to control valves. *Carr* teaches "a "control system **112**" in which "the operations of the chemical storage system **106**, hydration blender **102**, proppant storage system **110**, mixing

blender **108**, manifold **120**, and/or pumps **130** are controlled, coordinated, and monitored by a central control system **112**."[268] Further, *Carr* discloses "in some embodiments, the control system **112** can be utilized to control the position of the first valve **470**, second valve **472**, and/or the proportioning valve **474** by utilizing flow data from the first flow meter **150** and the second flow meter **152** in light of fluid flow targets for the first well **140** and/or the second well **142**."[269] *Carr* teaches a control system **112** configured to perform various functions, including opening and closing valves. A control system would have comprised controllers(s).

444. Accordingly, *Carr* discloses the limitations of 27.3.

d. <u>27.4: "open the second valve to thereby communicate fluid to the second well via the second valve; and"</u>

445. As discussed above regarding 27.2, *Carr* discloses "the first valve **470** and the second valve **472** can allow for the first well **140** and the second well **142** to each be stimulated individually by opening the respective first valve **470** or the second valve **472** and closing the other valves." [270] A POSITA would have recognized this as teaching the limitations of 27.4.

446. Accordingly, *Carr* discloses the limitation of 27.4.

---

[268] Ex. 1004 at [0025].

[269] Ex. 1004 at [0035].

[270] Ex. 1004 at [0033].

e. 27.5: "close the first valve after opening the second valve,"

447. Except for being written as a system claim, the limitations of 27.5 are identical to those of 1.4 and are disclosed by *Carr* for the same reasons as those discussed in Section XII.A.d.

f. 27.6: "in response to: determining that the fluid communicated via the manifold has satisfied one or more conditions."

448. Except for being written as a system claim, the limitations of 27.6 are identical to those of 1.2 and are disclosed by *Carr* for the same reasons as those discussed in Section XII.A.b.

449. Because *Carr* discloses each and every limitation of Claim 27, *Carr* anticipates Claim 27, or in the alternative, renders obvious Claim 27 for the reasons discussed above.

BB. DEPENDENT CLAIM 28

450. Dependent Claim 28 depends from Claim 27. In addition to the disclosure of the limitations of Claim 27 discussed above, *Carr* discloses the additional limitations of Claim 28:

a. 28.1: "28. The system of claim 27, further comprising: a third valve via which fluid is communicated from the manifold to a third well;"

451. With the exception of being part of a system claim and depending from Claim 27, the limitations of 28.1 are substantially similar to those of 2.1 discussed

above. Thus, the limitations of 28.1 are disclosed by *Carr* at least for the same reasons as those discussed above regarding 2.1 in Section XII.B.a.

b. <u>28.2: "a fourth valve via which the fluid is adapted to be communicated to a fourth well; and"</u>

452. Except for being rewritten as a system claim, the limitations of 28.2 are substantially similar to those of Claim Limitations 2.3 and 2.4 and are disclosed or rendered obvious by *Carr* for the same reasons as those discussed in Sections XII.B.c and XII.B.d.

c. <u>28.3: "the one or more controllers, configured to: open the fourth valve to thereby communicate fluid to the fourth well via the fourth valve; and"</u>

453. *Carr* renders this limitation obvious. As discussed above regarding 27.3, *Carr* discloses controllers for control the position of the first valve **470**, second valve **472**, and/or the proportioning valve **474** by utilizing flow data from the first flow meter **150** and the second flow meter **152** in light of fluid flow targets for the first well **140** and/or the second well **142**."[271] *Carr* teaches a control system 112 configured to perform various functions, including opening and closing valves.

454. As was well known to a POSITA, a well pad may include one, two, three, four, or more wells. Thus, although *Carr* discusses a first well and a second well in detail, it would have been obvious to a POSITA to perform the same method

[271] Ex 1004 [0035]

or sequence of the first and second wells on a third well, a fourth well, and any additional wells based on *Carr's* teaching of performing the method on multiple wells (*e.g.*, first and second well). Moreover, mere repetition of elements has no patentable significance unless a new and unexpected result is produced. Here, performing the method of Claim 1 on additional wells in the same environment (i.e. fourth well and fourth valve) would be performed in the same way and produce the same expected results as the first and second well and therefore would have been obvious to a POSITA.

455. Accordingly, *Carr* discloses, or at least renders obvious, controllers which are configured to open the fourth valve to communicate fluid to the fourth well. Thus, *Carr* discloses the limitations of 28.3.

d. <u>28.4: "close the third valve after opening the fourth valve,"</u>

456. Except for being rewritten as part of a system claim, the limitations of 28.4 are substantially similar to those of 2.5 and are disclosed or rendered obvious by *Carr* for the same reasons as those discussed in XII.B.e.

e. <u>28.5: "in response to: determining that the fluid communicated via the manifold has satisfied the one or more conditions."</u>

457. Except for being rewritten as a system claim, the limitations of 28.5 are substantially similar to those of 1.2 and are disclosed or rendered obvious by *Carr* for the same reasons as those discussed in XII.A.b.

458. Because *Carr* discloses each and every limitation of Claim 28, *Carr* anticipates Claim 28, or in the alternative, renders obvious Claim 28 for the reasons discussed above.

CC. DEPENDENT CLAIM 29

459. Dependent Claim 29 depends from Claim 28, which depends from Claim 27. In addition to the disclosure of the limitations of Claim 28 discussed above, *Carr* discloses the additional limitations of Claim 29:

a. 29.1: "29. The system of claim 28, wherein the one or more controllers are further configured to: close the first valve after opening both the second valve and the fourth valve; and/or

460. *Carr* discloses this limitation. *Carr*'s control system **112** can be used to "control the position of the first valve **470**, second valve **472**, and/or the proportioning valve **474** by utilizing flow data from the first flow meter **150** and the second flow meter **152** in light of fluid flow targets for the first well **140** and/or the second well **142**."[272] Further, with the exception of being a system claim and depending from Claim 27, the limitations of 29.1 are substantially similar to those of 3.1 discussed above. Thus, the limitations of 29.1 are disclosed by *Carr* at least for the same reasons as those discussed above regarding 3.1 in Section XII.C.a.

[272] Ex. 1004 at [0035].

b. 29[b]: "close the third valve after opening both the second valve and the fourth valve."

461. *Carr* discloses this limitation. *Carr*'s control system **112** can be used to "control the position of the first valve **470**, second valve **472**, and/or the proportioning valve **474** by utilizing flow data from the first flow meter **150** and the second flow meter **152** in light of fluid flow targets for the first well **140** and/or the second well **142**."[273] Further, with the exception of being a system claim and depending from Claim 27, the limitations of 29.2 are substantially similar to those of 3.2 discussed above. Thus, the limitations of 29.2 are disclosed by *Carr* at least for the same reasons as those discussed above regarding 3.2 in Section XII.C.b.

462. Because *Carr* discloses each and every limitation of Claim 28, *Carr* anticipates Claim 28, or in the alternative, renders obvious Claim 28 for the reasons discussed above.

DD. DEPENDENT CLAIM 30

463. Dependent Claim 30 depends from Claim 27. In addition to the disclosure of the limitations of Claim 27 discussed above, *Carr* discloses the limitations of Claim 30:

[273] Ex. 1004 at [0035].

a. **30. The system of claim 27, wherein the one or more conditions include one or more flow rate conditions.**

464. With the exception of being rewritten as a system claim and depending from Claim 27, the limitations of Claim 30 are identical to those of Claim 4 discussed above. Thus, the limitations of Claim 30 are disclosed by *Carr* for at least for the same reasons as those discussed above regarding Claim 4 in Section XII.D. Accordingly, *Carr* anticipates Claim 30, or in the alternative, renders obvious Claim 30 for the reasons discussed above.

EE. DEPENDENT CLAIM 31

465. Dependent Claim 31 depends from Claim 30, which depends from Claim 27. In addition to the disclosure of the limitations of Claims 27 and 30 discussed above, *Carr* discloses the additional limitations of Claim 31:

a. **31. The system of claim 30, wherein the fluid communicated via the manifold has satisfied the one or more flow rate conditions when a flow rate of the fluid is below an upper threshold, above a lower threshold, or both.**

466. With the exception of being rewritten as a system claim and depending from Claim 30, the limitations of Claim 31 are identical to those of Claim 5 discussed above. Thus, the limitations of Claim 31 are disclosed by *Carr* at least for the same reasons as those discussed above regarding Claim 5 in Section XII.E. Accordingly, *Carr* anticipates Claim 31, or in the alternative, renders obvious Claim 31 for the reasons discussed above.

FF. DEPENDENT CLAIM 32

467. Dependent Claim 31 depends from Claim 30, which depends from Claim 27. In addition to the disclosure of the limitations of Claims 27 and 30 discussed above, *Carr* discloses the additional limitations of Claim 31:

a. **32. The system of claim 30, wherein the fluid communicated via the manifold has not satisfied the one or more flow rate conditions when a flow rate of the fluid is above an upper threshold or below a lower threshold.**

468. With the exception of being rewritten as a system claim and depending from Claim 30, the limitations of Claim 32 are identical to those of Claim 6 discussed above. Thus, the limitations of Claim 32 are disclosed by *Carr* at least for the same reasons as those discussed above regarding Claim 6 in Section XII.F. Accordingly, *Carr* anticipates Claim 32, or in the alternative, renders obvious Claim 32 for the reasons discussed above.

GG. DEPENDENT CLAIM 33

469. Dependent Claim 33 depends from Claim 27. In addition to the disclosure of the limitations of Claim 27 discussed above, *Carr* discloses the additional limitations of Claim 33:

a. **"33. The system of claim 27, further comprising the manifold."**

470. As discussed above regarding Claim 27, *Carr* teaches "in some embodiments, the mixed or manufactured fluid from the mixing blender **108** can be

pumped simultaneously to the first well **140** [annotated in blue] and the second well **142** via a manifold **120** [annotated in green]."[274]

471. Accordingly, *Carr* discloses the limitations of Claim 33. Thus, *Carr* anticipates Claim 33, or in the alternative, renders obvious Claim 33 for the reasons discussed above.

HH. DEPENDENT CLAIM 34

472. Dependent Claim 34 depends from Claim 27. In addition to the disclosure of the limitations of Claim 27 discussed above, *Carr* discloses the additional limitations of Claim 34:

a. 34.1: "34. The system of claim 27, further comprising one or more pumps;"

473. *Carr* teaches "fracturing fluid can be transferred, transported, and/or pressurized within the first isolated manifold path 122 and the second isolated manifold path 124 via an array of pumps 130."[275]

474. Accordingly, *Carr* discloses one or more pumps as claimed by 34.1.

b. 34.2: "wherein the one or more controllers are further configured to cause the one or more pumps to pump the fluid into the manifold."

475. As discussed above regarding 34.1, *Carr's* pumps are configured to pump fluid into wells via a manifold. *Carr* teaches "fracturing fluid can be

[274] Ex. 1004 at [0021].

[275] Ex. 1004 at [0022].

transferred, transported, and/or pressurized within the first isolated manifold path 122 and the second isolated manifold path 124 via an array of pumps 130"[276] *Carr* also discloses that "the operations of the…pumps 130 are controlled, coordinated, and monitored by a central control system 112 [*i.e.*, controller(s)]."[277]

476. Accordingly, *Carr* discloses the limitations of 34.2. Because *Carr* discloses each and every limitation of Claim 34, *Carr* anticipates Claim 34, or in the alternative, renders obvious Claim 34 for the reasons discussed above.

II. DEPENDENT CLAIM 35

477. Dependent Claim 35 depends from Claim 27. In addition to the disclosure of the limitations of Claim 27 discussed above, *Carr* discloses the additional limitations of Claim 35:

a. 35. The system of claim 27, wherein the fluid communicated via the manifold is hydraulic fracturing fluid.

478. With the exception of being rewritten as a system claim and depending from Claim 27, the limitations of Claim 35 are identical to those of Claim 10 discussed above. Thus, the limitations of Claim 35 are disclosed by *Carr* at least for the same reasons as those discussed above regarding Claim 10 in Section XII.J.

[276] Ex. 1004 at [0022].

[277] Ex. 1004 at [0025].

Accordingly, *Carr* anticipates Claim 35, or in the alternative, renders obvious Claim 35 for the reasons discussed above.

JJ. DEPENDENT CLAIM 36

479. Dependent Claim 36 depends from Claim 27. In addition to the disclosure of the limitations of Claim 27 discussed above, *Carr* discloses the additional limitations of Claim 36:

a. 36. The system of claim 27, wherein: the first valve is a first zipper valve; and/or the second valve is a second zipper valve.

480. With the exception of being rewritten as a system claim and depending from Claim 27, the limitations of Claim 36 are identical to those of Claim 11 discussed above. Thus, the limitations of Claim 36 are disclosed by *Carr* at least for the same reasons as those discussed above regarding Claim 11 in Section XII.K. Accordingly, *Carr* anticipates Claim 36, or in the alternative, renders obvious Claim 36 for the reasons discussed above.

KK. DEPENDENT CLAIM 37

481. Dependent Claim 37 depends from Claim 27. In addition to the disclosure of the limitations of Claim 27 discussed above, *Carr* discloses the additional limitations of Claim 37:

a. 37.1: "The system of claim 27, wherein the second valve is associated with both the manifold and the second well; and"

482. With the exception of being rewritten as a system claim and depending from Claim 27, the limitations of 37.1 are identical to those of Claim 12.1 discussed above. Thus, the limitations of Claim 37.1 are disclosed by *Carr* at least for the same reasons as those discussed above regarding Claim 12.1 in Section XII.L.a.

b. 37.2: "wherein communicating fluid to the second well via the second valve comprises communicating fluid to the second well via the manifold and the second valve."

483. With the exception of being rewritten as a system claim and depending from Claim 27, the limitations of 37.2 are identical to those of Claim 12.2 discussed above. Thus, the limitations of Claim 37.2 are disclosed by *Carr* at least for the same reasons as those discussed above regarding Claim 12.2 in Section XII.L.b.

484. Because *Carr* discloses each and every limitation of Claim 37, *Carr* anticipates Claim 37, or in the alternative, renders obvious Claim 37 for the reasons discussed above.

LL. DEPENDENT CLAIM 38

485. Dependent Claim 37 depends from Claim 37. In addition to the disclosure of the limitations of Claim 37 discussed above, *Carr* discloses the additional limitations of Claim 38:

a. "38. The system of claim 37, wherein the fluid communicated via the manifold is hydraulic fracturing fluid."

486. With the exception of being rewritten as a system claim and depending from Claim 37, the limitations of 38 are identical to those of Claim 13 discussed above. Thus, the limitations of Claim 38 are disclosed by *Carr* at least for the same reasons as those discussed above regarding Claim 13 in Section XII.M. Accordingly, *Carr* anticipates Claim 38, or in the alternative, renders obvious Claim 38 for the reasons discussed above.

XIII. GROUND 5: OBVIOUS OVER CARR IN VIEW OF BEUTERBAUGH

487. It is my opinion that the combination of *Carr* and *Beueterbaugh* discloses and/or suggests all limitations of claims 1-3, 14-16 and 27-29, thereby rendering these claims obvious. To the extent *Carr* alone does not anticipate or render obvious 1-3, 14-16 and 27-29, this ground is presented as an alternative to Grounds 3-4. Ground 5 incorporates by reference the discussion of Grounds 3-4 above. The relevant limitations disclosed by *Beuterbaugh* are presented below. All other elements and Claims are disclosed or rendered obvious by *Carr* as described above in Grounds 3-4.

A. RATIONALE AND MOTIVATION TO COMBINE

488. A POSITA would have been motivated at the time of the '770 Patent, with a reasonable expectation of success, to combine the teachings of *Carr* and

Beuterbaugh. *Beuterbaugh* is in the same field of endeavor of oil and gas well systems as *Carr* (as well as the '770 Patent) and is directed to solving the same problem – controlling well operations. The title of *Carr* is "Method and Apparatus for Metering Flow During Centralized Well Treatment".[278] *Carr* is directed to "methods and apparatuses for simultaneously treating multiple wells from a centralized location."[279] The title of *Beuterbaugh* is "Simulfrac Pulsed Treatment."[280] *Beuterbaugh* is directed to "[a] method and system pulse for treating a plurality of wells simultaneously includes applying a high pressure of fracturing fluid"[281]

489. Both references teach the use of fracturing fluid used to fracture subterranean formations.[282] Both references teach simultaneous or concurrent fracturing operations on multiple wells. *Carr* discloses "methods and apparatuses for simultaneously treating multiple wells from a centralized location."[283] *Beuterbaugh* teaches "treating a plurality of wells simultaneously,"[284] and a "first

---

[278] Ex. 1004 at Title.

[279] Ex. 1004 at [0001].

[280] Ex. 1005 at Title.

[281] Ex. 1005 at Abstract.

[282] *See*, *e.g.*, Ex 1004 [0014], [0017], [0023]; Ex 1005 Abstract, [0015], [0017].

[283] Ex. 1004 [001], *see also* [0013], [0014], [0016], [021], [0033].

[284] Ex. 1005 at Abstract.

switching valve connected to a first wellhead associated with a first well and a second switching valve connected to a second wellhead associated with a second well for treating the plurality of wells simultaneously."[285]

490. Both references teach the use of pumps, manifolds and valves to direct fracturing fluid to a plurality of well bores. *Carr* teaches "the suction ports **166** of the first isolated manifold path **122** allow pumps **130** to receive a fluid flow from the first isolated manifold path **122**. The discharge ports **168** provide the pumped fluid from the pumps **130** back to the first isolated manifold path **122**."[286] Further, *Carr* discloses the use of valves to direct flow to the wellhead: "the first valve **470** and the second valve **472** can be used to control the flow rate to the first well **140**, the second well **142**, or to both the first well **140** and the second well **142** simultaneously."[287]

491. Similarly, *Beuterbaugh* discloses more effective use of "high pressure pumps, blender, manifolds and valves can be achieved"[288] using the system of *Beuterbaugh.* Further, *Beuterbaugh* discloses "[t]he high pressure fracturing fluid is pulsed by using one or more high pressure valves to alternate fluidic flow between two or more wells."[289]

---

[285] Ex. 1005 Claim 1, *see also* [0015], [0026], [0030], [0041], Claim 12.

[286] Ex. 1004 at [0029].

[287] Ex. 1004 at [0033].

[288] Ex. 1005 at [0004].

[289] Ex. 1005 at [0015].

492. To the extent that *Carr* does not already teach a computer-based apparatus for controlling the pumps and valves, a POSITA would have been motivated to use the apparatus of *Beuterbaugh* to more effectively control the pumps and valves to direct fluid flow to the wells in the manner disclosed by *Carr* and *Beuterbaugh* to take advantage of computerized control operations. *Beuterbaugh's* computerized controller is intended for control of valves and fracturing equipment: "The controller **158** may comprise a computer processor connected by a bus to a memory. The memory may include a software program for performing the control and operational sequencing of the components, including the sequencing of opening and closing the switching valves **150a**, **150b**, **156**, plug valves **155a**, **155b**, and flapper checks **160a-160d**."[290]

493. Further, to the extent the Board finds that *Carr* does not specifically disclose closing the first valve after the second valve, a POSITA would have been motivated to apply the teachings of *Beuterbaugh* to the method and system of *Carr* in order to further *Carr's* goal of pumping fluid "simultaneously to the first well **140** and the second well **142** via a manifold **120**."[291] *Beuterbaugh* explicitly discloses closes "first valve" 150a after "second valve" 150b is opened.[292]

---

[290] Ex. 1005 at [0025].

[291] Ex. 1004 at [0021].

[292] *See*, *e.g.*, Ex. 1005 at [0021].

494. Further, to the extent that the Board finds "multiple wells" in *Carr* to be limited to only the examples of one or two wells detailed in *Carr*, a POSITA would have been motivated to apply the teaching of *Beuterbaugh* so that fracturing operations can be performed on more than two wells at the same time.

495. A POSITA would have had a reasonable expectation of success in applying *Beuterbaugh's* computerized controller, valve switching techniques and multiple wells (in excess of two) to the system and methods of *Carr* as it is simply the use of a known technique to improve similar systems and methods in the same way. Further, a POSITA would have had reasonable expectation of success in combining the teachings of *Carr* and *Beuterbaugh* as the combination is simply combining prior art elements according to known methods to yield predictable results.

B. INDEPENDENT CLAIMS 1, 14, 27

496. It is my opinion that *Carr* anticipates, or at least renders obvious each of the Independent Claims of the '770 Patent. To the extent the Board finds that *Carr* alone does not disclose or suggest each limitation of the Independent Claims, it is my opinion that *Carr* combined with *Beuterbaugh* renders obvious Independent Claims 1, 14 and 27 of the '770 Patent. C*arr* and *Beuterbaugh*, either alone or in combination disclose, or at least render obvious, each and every limitation of Claim

1, Claim 14 and Claim 27. Details regarding the specific disclosures of *Carr* and *Beuterbaugh* are contained in the subsections following.

a. <u>Claim 1</u>

i. *1.1 – 1.3 "1. A method, comprising: communicating fluid to a first well via a manifold and a first valve, the first valve being associated with both the manifold and the first well; and in response to determining that the fluid communicated via the manifold has satisfied one or more conditions: opening a second valve; communicating fluid to a second well via the second valve; and"*

497. Claim Limitations 1.1-1.3 are disclosed or at least obvious over the teachings of *Carr* for the same reasons as those discussed in Sections XII.A.a.-XII.A.c. above.

ii. *1.4 "closing the first valve after opening the second valve."*

498. It is my opinion that Limitation 1.4 is disclosed, or at least rendered obvious by *Carr* alone. To the extent the Board finds that closing the first valve after opening the second valve was not taught or suggested by *Carr*, *Beuterbaugh* explicitly discloses this valve sequence.

499. *Beuterbaugh* discloses "more effective use of the surface equipment such as, for example, the high pressure pumps, blender, manifolds and valves"[293] of a fracturing operation by switching valves to direct fluid to multiple wells

[293] Ex. 1005 at [0004].

simultaneously and sequentially. *Beuterbaugh* teaches pumping fluid into the first well via the first valve as a "first state" of the process, as recited in Claim Limitation 1.1, by "opening switching valve **150a** and plug valve **155a** such that the flow rate of the fracturing fluid **151**…is directed to the first wellhead **115a**."[294] This state is illustrated in Fig. 3A, which shows valve **150a** [annotated in red] open and fluid **151** flowing to wellhead **115a** [annotated in blue] (and subsequently to well **120a**). In contrast, there is no fluid flowing to wellhead **115b** [annotated in green] (and subsequently to well **120b**) as valve **150b** is closed. [annotated in yellow].

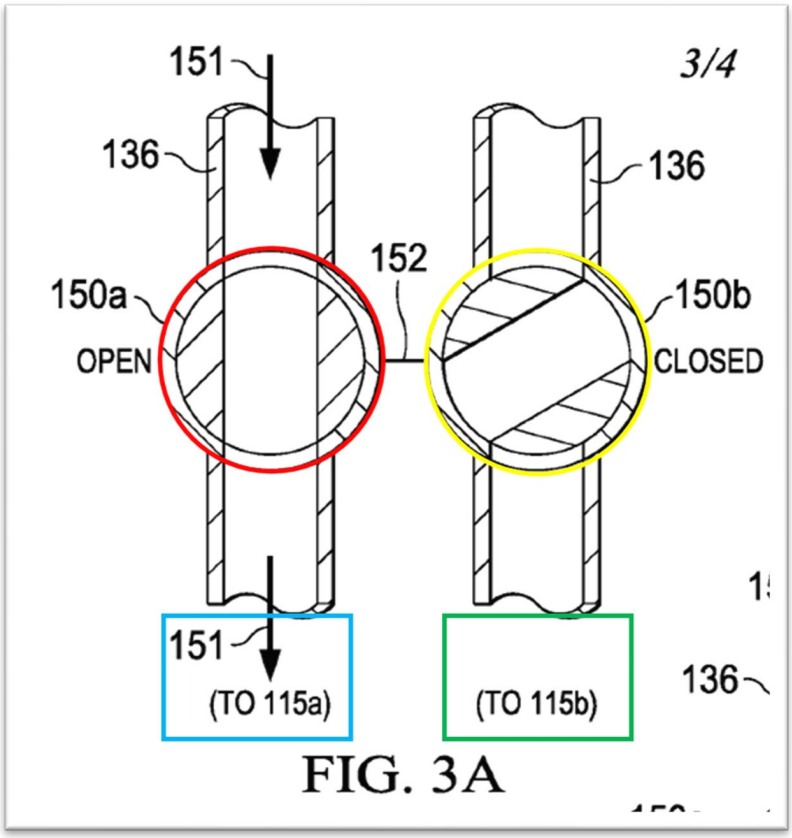

FIG. 3A

[294] Ex. 1005 at [0021].

500. *Beuterbaugh* further discloses, while placing the system into the 2nd state, "as shown in FIG. 3B, a pulse of fluid flow **151** is directed to the second wellhead **115b** [annotated in green] by first opening the plug valve **155b** downstream of switching valve **150b**, then switching valve **150b** [annotated in yellow] is opened as switching valve **150a** is being closed."[295] By opening valve **150b** "as switching valve **150a** [annotated in red] is being closed," the second valve (**150b**) is opened while fluid is still being pumped to wellhead **115a** (and well **120a)** through valve **150a**. Note that in Fig. 3B, fluid flow **151** is flowing to both wellhead **115a** and **115b** simultaneously.

[295] Ex. 1005 at [0021].

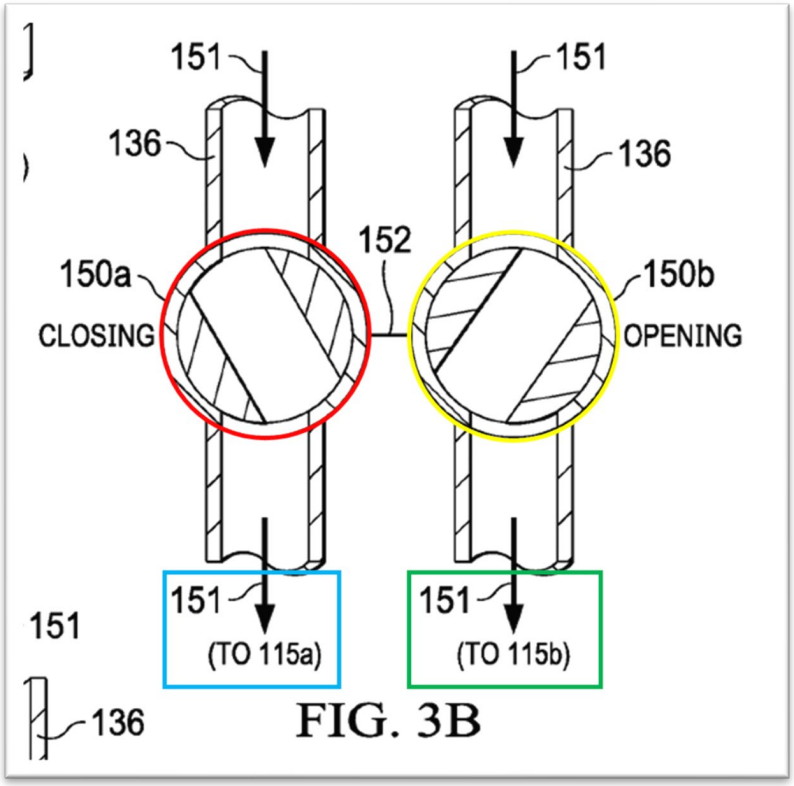

501. Accordingly, *Beuterbaugh* discloses closing the first valve (**150a**) after opening the second valve (**150b**). Thus, *Beuterbaugh* discloses Limitation 1.4. As discussed above, a POSITA would have been motivated to combine *Beuterbaugh*'s disclosure with *Carr* in order to further *Carr's* goal of pumping fluid "simultaneously to the first well **140** and the second well **142** via a manifold **120**."[296] Further, a POSITA would have had reasonable expectation of success in combining the teachings of *Carr* and *Beuterbaugh* as the combination is simply combining prior art elements according to known methods to yield predictable results.

[296] Ex. 1004 at [0021].

502. Because the combination of *Carr* and *Beuterbaugh* disclose each and every limitation of Claim 1, the combination renders Claim 1 obvious.

b. <u>Claim 14</u>

i. *14.1 : "An apparatus comprising: a non-transitory computer readable medium; and a plurality of instructions stored on the non-transitory computer readable medium and executable by one or more processors, wherein, when the instructions are executed by the one or more processors, the following steps are executed:"*

503. To the extent *Carr* does not disclose, or render obvious, that controller **112** comprises a computer system as described in Limitation 14.1, *Beuterbaugh* discloses the use of such a generic computer system to control operations at a fluid handling site. *Beuterbaugh* discloses a "controller **158** may also control any of the switching valves **150a**, **150b**."[297] Further, *Beuterbaugh* teaches "[t]he controller **158** may comprise a computer processor connected by a bus to a memory. The memory may include a software program for performing the control and operational sequencing of the components, including the sequencing of opening and closing the switching valves **150a**, **150b**, **156**, plug valves **155a**, **155b**, and flapper checks **160a-160d**."[298]

[297] Ex. 1005 at [0025].

[298] Ex. 1005 at [0025].

504. A POSITA would have immediately recognized *Beuterbaugh's* "memory" as a non-transitory computer readable medium. Further, a POSITA would have immediately recognized *Beuterbaugh's* "program" as a plurality of instructions stored on the computer readable medium and executable by *Beuterbaugh's* "computer processor." Further, a POSITA would have recognized that the software program executes the steps of sequencing valves and directing flow which comprise Limitations 14.2 – 14.5.

505. Accordingly, *Beuterbaugh* discloses, and the combination of *Carr* and *Beuterbaugh* render obvious Claim Limitation 14.1.

ii. *14.2 – 14.4: "communicating fluid to a first well via a manifold and a first valve, the first valve being associated with both the manifold and the first well; and in response to determining that the fluid communicated via the manifold has satisfied one or more conditions: opening a second valve; communicating fluid to a second well via the second valve; and"*

506. Claim Limitations 14.2-14.4 are disclosed or at least obvious over the teachings of *Carr* for the same reasons as those discussed in Sections XII.N.b-XII.N.d. above.

iii. *14.5: "closing the first valve after opening the second valve."*

507. With the exception of being rewritten as an apparatus claim, the language in Limitation 14.5 is identical to that of Limitation 1.4. Thus, Limitation 14.5 is disclosed by *Beuterbaugh*, and the combination of *Carr* and *Beuterbaugh*

render obvious Limitation 14.5 for the same reasons as those discussed regarding Limitation 1.4 in Section XIII.B.a.ii above.

508. Because the combination of *Carr* and *Beuterbaugh* disclose each and every limitation of Claim 14, the combination renders Claim 14 obvious.

c. <u>Claim 27</u>

i. *27.1 – 27.4: "27. A system, comprising: a first valve via which fluid is communicated from a manifold to a first well; a second valve via which fluid is adapted to be communicated to a second well; and one or more controllers, configured to: open the second valve to thereby communicate fluid to the second well via the second valve; and"*

509. Claim limitations 27.1-27.4 are disclosed or at least obvious over the teachings of *Carr* for the same reasons as those discussed in Section XII.AA.a-XII.AA.d above.

ii. *27.5: "close the first valve after opening the second valve,"*

510. Except for being rewritten as a system claim, the language in Limitation 14.5 is substantially similar to that of Claim Limitation 1.4 and is disclosed by *Beuterbaugh*, and the combination of *Carr* and *Beuterbaugh* render obvious Limitation 27.5 for the same reasons as those discussed regarding Limitation 1.4 in Section XIII.B.a.ii above.

iii. *27.6: "in response to: determining that the fluid communicated via the manifold has satisfied one or more conditions."*

511. Limitation 27.6 is disclosed or at least obvious over the teachings of *Carr* for the same reasons as those discussed in Section XII.AA.f above.

512. Because the combination of *Carr* and *Beuterbaugh* discloses each and every limitation of Claim 27, the combination renders Claim 27 obvious.

C. DEPENDENT CLAIMS 2, 15 AND 28

513. Dependent Claims 2, 15 and 28 depend from Independent Claims 1, 14 and 27, respectively, and claim applying the same processes of the Independent Claims to a third and fourth valve and well. It is my opinion that *Carr* alone discloses, or at least renders obvious, Claims 2, 15 and 28, as discussed above in Sections XII.B, XII.O, and XII.BB. To the extent the Board finds that the disclosure of *Carr*'s use of monitored flow data to control valve positions of "multiple wells" is limited only to two wells, *Beuterbaugh* teaches that fracturing operations can be performed on more than two wells at the same time.

514. Each of these Claims is substantially similar except for being part of method, apparatus, or system claims, and simply claim the same process of the Independent Claims to third and fourth wells. Claim 2 is representative:

Claim 2: The method of claim 1, further comprising: communicating fluid to a third well via the manifold and a third valve, the third valve

being associated with both the manifold and the third well; and in response to determining that the fluid communicated via the manifold has satisfied the one or more conditions: opening a fourth valve; communicating fluid to a fourth well via the fourth valve; and closing the third valve after opening the fourth valve.

515. *Beuterbaugh* teaches that the same process demonstrated in the Independent Claims, including communicating fluid via manifolds and valves to the wells and closing a second valve after opening a first valve, applies equally to a "third well." *Beuterbaugh* discloses, referring to the switching operations "a third switching valve and associated third plug valve operatively connected to a third well head may be included in the process as separate steps that operates in similar sequential fashion"[299] to the sequence of first and second switching valves **150a** and **150b** described above. A valve which directs fluid to the well using a manifold, as described in *Beuterbaugh* would necessarily be associated with both the manifold and the well. Additionally, a manifold was a well-known piece of equipment used at a fluid handling site for decades prior to the '770 Patent.

516. Further, based on the teachings of *Carr* that the fluid handling operation can be applied to "multiple wells" and the teaching of *Beuterbaugh* that the process can be applied to a third well, a POSITA would have found it obvious to apply the

[299] Ex. 1005 at [0028].

same process of *Carr*, supplemented with *Beuterbaugh* to a fourth well. As was well known to a POSITA, a well pad may include one, two, three, four, or more wells. Thus, although *Carr* discusses a first well and a second well in detail, and *Bueterbaugh* further teaches a first, second and third well, it would have been obvious to a POSITA to perform the same method or sequence of the first and second and third wells on a fourth well, and any additional wells. Moreover, mere repetition of elements has no patentable significance unless a new and unexpected result is produced. Here, performing the method of the Independent Claims on additional wells in the same environment (*i.e.*, fourth well and fourth valve) would be performed in the same way and produce the same expected results as the first and second and third well and therefore would have been obvious to a POSITA.

517. Accordingly, *Beuterbaugh* discloses and the combination of *Carr* and *Beuterbaugh* render obvious Claims 2, 15 and 18.

D. DEPENDENT CLAIMS 3, 16 AND 29

518. Dependent Claims 3, 16 and 29 depend from Claims 2, 15 and 28, which depend from Independent Claims 1, 14 and 27, respectively, and claim additional configuration and sequencing of valve closures

a. The first valve is closed after opening both the second and the fourth valve

519. This limitation, in various forms, is similar across Claims 3, 16 and 29. Limitation 3.1 is representative.

3.1: "3. The method of claim 2, wherein: the first valve is closed after opening both the second valve and the fourth valve; and/or"

520. This limitation is similar to limitations 1.4, 14.5 and 27.5 except that it adds the limitation of the fourth valve being opened before the first valve is closed. *Carr* discloses, or at least renders obvious this limitation as discussed in Sections XII.A, XII.N, and XII.AA. Additionally, *Beuterbaugh's* specific description of closing the first valve after opening the second valve, along with *Beuterbaugh's* disclosure that fluid handling operations can be performed on a third well "that operates in similar sequential fashion" renders this claim obvious. A POSITA would recognize, based on the teaching of *Carr* and *Beuterbaugh* that at a location with "multiple wells," including at least four wells, simultaneous flow to at least three wells (e.g. first, second and fourth) would be desired. In such a configuration, the "first" valve would necessarily be open while the "second and fourth" valves are open for simultaneous flow operations involving those wells. Further, based on the teachings of *Carr* and *Beuterbaugh* it would be obvious to close the first valve during such a simultaneous flow operation.[300] Performing the process of the Independent Claims on additional wells in the same environment (*i.e.*, first, second and fourth well and first, second and fourth valve) would be performed in the same way as the

[300] *See*, *e.g.*, Sections XII.A.d and XIII.B.a.ii.

first and second well, and would produce the same expected results as the first and second and third wells and therefore would have been obvious to a POSITA.

b. <u>The third valve is closed after opening both the second valve and the fourth valve.</u>

521. This Limitation merely provides another option for the sequence of opening and closing valves (following an "and/or" transition word). Claims 3, 16 and 29 each have similar language.

522. Limitation 3.2 is representative.

3.2: "the third valve is closed after opening both the second valve and the fourth valve."

523. As discussed above with respect to the "first, second, fourth" limitation, the combination of *Carr* and *Beuterbaugh* make it obvious to apply the same process of the independent claims (*e.g.*, closing the first valve after the second valve is open) to a third valve. This limitation merely replaces the "first" valve with a "third" valve to be closed after opening both the second valve and fourth valve. For the same reasons discussed above regarding the "first, second, fourth valve" limitation, the combination renders this particular sequence obvious. Performing the process of the Independent Claims on additional wells in the same environment (*i.e.*, third, second, and fourth wells and first, second, and fourth valves) would be performed in the same way as the first and second wells and first and second valves, and would

produce the same expected results as the first and second well and therefore would have been obvious to a POSITA.

524. Accordingly, the combination of *Carr* and *Beuterbaugh* renders obvious Claims 3, 16, and 29.

XIV. GROUND 6: OBVIOUS OVER CARR IN VIEW OF BEUTERBAUGH FURTHER IN VIEW OF JACKSON

525. It is my opinion that the combination of *Carr*, *Beuterbaugh* and *Jackson* discloses and/or suggests all limitations of dependent claims 5, 6, 9, 18, 19, 22, 31 and 32, thereby rendering these claims obvious. To the extent *Carr* alone (or the combination of *Carr* and *Beuterbaugh*) does not anticipate or render obvious dependent claims 5, 6, 9, 18, 19, 22, 31 and 32, this ground is presented as an alternative to Grounds 3-5. Ground 6 incorporates by reference the discussion of Grounds 3-5 above. The relevant limitations disclosed by *Jackson* are presented below. All other elements and Claims are disclosed or rendered obvious by *Carr* or *Carr* and *Beuterbaugh* as described above in Grounds 3-5.

A. RATIONALE AND MOTIVATION TO COMBINE

526. The rationale and motivation to combine *Carr* and *Beuterbaugh* is the same as discussed above regarding Ground 5. Ground 6 incorporates by reference the discussion of Ground 5. Nothing in *Jackson* teaches away or conflicts with the rationale and motivation to combine *Carr* and *Beuterbaugh.* To the extent that *Carr* alone, or *Carr* and *Beuterbaugh* do not disclose or render obvious the use of flowrate

thresholds as a fluid condition, a POSITA would have been motivated, with a reasonable expectation of success, to combine the teachings of *Jackson* regarding flowrate thresholds as a condition to move to the next step of the fluid handling operation.

527. Initially, all three references are in the same field of endeavor of oil and gas well systems (as well as the '770 Patent) and are directed to solving the same problem – controlling well operations. In addition to the discussion of *Carr* and *Beuterbaugh* above in Ground 5, *Jackson* is directed to "[a] process for fracturing a selected region of a formation including: introducing a supply of fracturing fluid to the region of the formation until a first threshold is reached."[301]

528. Further, all three references teach the use of fracturing fluid used to fracture subterranean formations.[302] Further, *Carr* and *Jackson* teach monitoring flow conditions. *Carr* teaches "utilizing flow data from the flow meters **150**, **152** in light of fluid flow targets for the first well **140** and/or second well **142**."[303] Similarly, *Jackson* discloses "As will be appreciated, however, generally other process parameters such as flow rate, pressure, volume, formation condition, etc. are

---

[301] Ex. 1007 at Abstract.

[302] *See*, *e.g.*, Ex. 1004 at [0014], [0017], [0023]; Ex. 1005 at Abstract, [0015], [0017]; Ex. 1007 at [0003], [0005], [0045], [0051].

[303] Ex. 1004 at [0035].

observed to assess a formation fracturing process."[304] While *Carr* discloses, or at least renders obvious, the use of *thresholds* as a monitored fluid condition that signals the process to open or close valves, *Jackson* is even more explicit in its disclosure. A POSITA would have been motivated to incorporate the explicit teachings of flowrate thresholds in *Jackson* with the teachings of *Carr and Beuterbaugh* in order to further *Carr's* goal of utilizing flow data to control valves directing fluid flow to the wells.

529. A POSITA would have had a reasonable expectation of success in combining *Jackson's* teachings of thresholds in the system, method and apparatus of *Carr* as enhanced by *Beuterbaugh* as the combination is simply the use of a known technique (flowrate thresholds) to improve a similar system (fluid handling system of *Carr* and *Beuterbaugh*) in the same way. Further, a POSITA would have had a reasonable expectation of success in that the combination is simple substitution of one known element (*Carr's* flowrate targets) for another (*Jackson's* flowrate thresholds) to obtain predictable results (controlling operation of the valves).

B. CLAIMS 5, 9, 18, 22 AND 31

530. Each of these claims contains a similar limitation, written in the form of a method, apparatus and system claim respectively. Claim 5 is representative.

[304] Ex. 1007 at [0019].

Claim 5: "5. The method of claim 4, wherein the fluid communicated via the manifold has satisfied the one or more flow rate conditions when a flow rate of the fluid is below an upper threshold, above a lower threshold, or both."

531. *Jackson* discloses this limitation. Jackson explicitly teaches the use of both an upper and a lower threshold.

532. Initially, *Jackson* teaches the use of flow rate thresholds as one of the conditions monitored as part of controlling valves for injecting fluid into a wellbore and associated formation. *Jackson* describes "there is a process for fracturing a formation including: introducing a supply of fracturing fluid to the formation until a first threshold is reached, adjusting the flow of the fracturing fluid to reach a second threshold, adjusting the flow to reach a third threshold, and ceasing from of the fracturing fluid to the formation, the fracturing fluid being a non-participating gas and including a proppant in at least one of the stages."[305]

533. *Jackson* further teaches specifically that the thresholds "may be defined by at least one criterion selected from a set of criteria consisting of: (a) a time period threshold; (b) a non-participating gas [fracturing fluid] *flow rate threshold*; (c) a well bore surface or bottom hole pressure threshold; (d) a well bore surface or bottom hole rate of pressure change threshold (e) a gas quantity threshold and (f) a formation

[305] Ex. 1007 at [0003].

condition threshold."[306] Jackson further teaches the use of a lower threshold: "the first threshold may be…a flow rate of dilation fluid of at least 300 scm."[307] Further, Jackson discloses the use of an upper threshold: "the second threshold may be defined as [a time period of more than 1 minute and less than 24 hours of a flow rate of dilation fluid of less than 300 scm, which may include 0 scm".[308] A POSITA would have found it obvious to include *Jackson*'s thresholds in the method/apparatus/system of *Carr* and *Beuterbaugh* so that, for example, an operator can determine when to move to the next step of the fluid handling operation (as disclosed by *Jackson*) to know when to operate the valves (as disclosed by *Carr* or *Carr* and *Beuterbaugh*).

534. Accordingly, *Jackson* discloses, and the combination of *Carr, Beuterbaugh*, and *Jackson* renders obvious Claims 5, 9, 18, 22 and 31.

C. CLAIMS 6, 19 AND 32

535. Claims 6, 19 and 32 essentially define the portion excluded by Claims 5,18, and 31. In other words, Claims 6, 19 and 32 merely say that if the flow rate conditions in Claims 5, 18 and 31 are not met, then the flow rate measured "has not

[306] Ex. 1007 at [0017]; *see also* Claim 20.

[307] Ex. 1007 at [0020].

[308] Ex. 1007 at [0021].

been satisfied." Thus, this Claim does not add anything more technically to Claims 5, 18 and 31 other than the use of the phrase "not met."

536. Claim 6 is representative:

"6. The method of claim 5, wherein the fluid communicated via the manifold has not satisfied the one or more flow rate conditions when a flow rate of the fluid is above an upper threshold or below a lower threshold."

537. Because *Jackson* discloses meeting certain flow rate thresholds, as discussed above with respect to Claims 5, 18 and 31, *Jackson* also discloses that when the flow rate does not meet the desired threshold, whether it's above an upper threshold or lower than a lower threshold, the measured flow rate "has not satisfied the one or more flow rate conditions." Moreover, this is standard practice for any flow system – if a measured flow rate is outside the required flow rate, then a flow rate condition is not met.

538. Accordingly, *Jackson* discloses the limitations of Claim 6, 19 and 32 and the combination of *Carr*, *Beuterbaugh* and *Jackson* renders Claim 6, 19 and 32 obvious.

XV. GROUNDS 7 AND 8: ANTICIPATED BY AND/OR OBVIOUS OVER TOLMAN

539. It is my opinion that *Tolman* discloses each and every element of Claims 1-38 of the '770 Patent. To the extent that the Board determines *Tolman* does

not anticipate the claims, it is my opinion that *Tolman* renders Claims 1-38 of the ’770 Patent obvious.

A. INDEPENDENT CLAIM 1

540. It is my opinion that *Tolman* anticipates, or at least renders obvious, Claim 1 of the ’770 Patent. Details regarding the specific disclosures of *Tolman* are contained in the subsections following. To the extent the Board determines that *Tolman* does not explicitly disclose the limitations of Claim 1, a POSITA would have found the pumping and switching arrangement of Claim 1 to be obvious in light of the disclosure and teachings of *Tolman*.

a. 1.1: “1. A method, comprising: communicating fluid to a first well via a manifold and a first valve, the first valve being associated with both the manifold and the first well; and”

541. *Tolman* discloses this limitation. Initially, *Tolman* discloses methods to enable “execution of concurrent or simultaneous wellbore preparation and stimulation operations in multiple wellbores located at a single surface location.”[309] A POSITA would have recognized “stimulation” operations or treatments to include injecting fluid into a well for hydraulic fracturing.

542. The step of communicating fluid to a first well via a manifold and valve is disclosed in Fig. 2 of *Tolman*. Fig. 2 of *Tolman* includes “a stimulation fluid

[309] Ex. 1006 at 2:1-4.

pumping system **202** [annotated in red], a stimulation storage system **204**, a well coupling system, such as a pumping system manifold **206** [annotated in blue], and flowback manifolds **230a-230c**."[310] The manifold **206** "couple[s] the stimulation fluid pumping system **202** to the trees **106a-106c** [annotated in green]" of each well.[311] *Tolman* further discloses the arrangement of valves as claimed, where "[e]ach of the trees may be connected to the first manifold well valve **214**, [annotated in orange], second manifold well valve **216** [annotated in yellow], and a third manifold well valve **218** [annotated in pink]."[312] Further, *Tolman* teaches "[t]hrough the coupling of the valves **210, 212, 214, 216** and **218**, flow paths may be provided through the pumping system manifold **206**. Because the first manifold well valve **214**, second manifold well valve **216**, and a third manifold well valve **218** may be set to an open or closed position, stimulation fluid may be injected into one or more of the wells **104a-l 04c**, while the other wells **104a-104c** may be isolated by at least one of the valves **214-218** from the stimulation fluid pumping system **202**."[313]

---

[310] Ex. 1006 at 6:14-17.

[311] Ex. 1006 at 6:48-50.

[312] Ex. 1006 at 6:61-64.

[313] Ex. 1006 at 7:20-27.

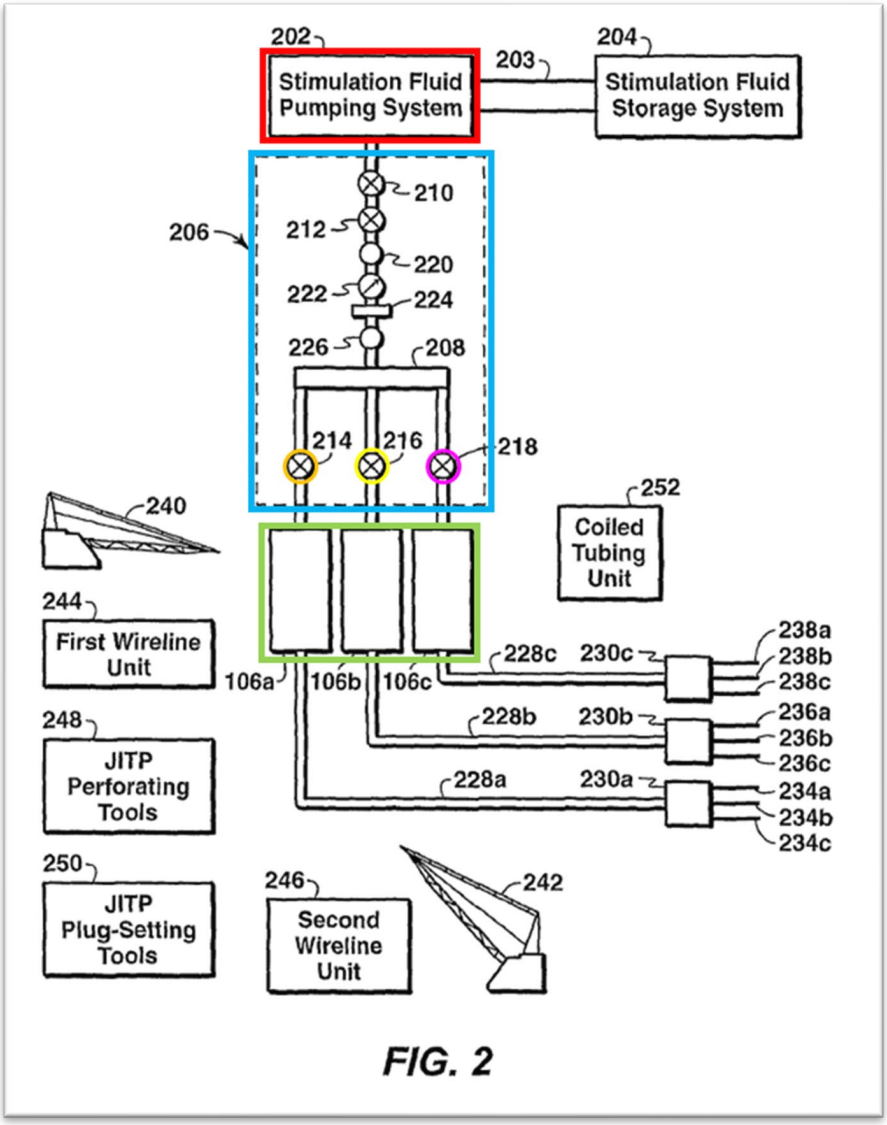

FIG. 2

543. Accordingly, *Tolman* teaches communicating (injecting) fluid into the first well via manifold **206** and first valve **214**, and valve **214** is associated both with the manifold and the first well.

544. As another example, in addition to valve **214**, *Tolman* discloses additional valves which would be the "first valve" as claimed. *Tolman* teaches "that two valves, such as a manifold well valve **214-218** and *a valve (not shown) on the*

tree ***106a-106c***, are closed during any given isolation from the other wells. Additionally, it may also be preferred that at least one or more valves be installed on trees **106a-106c** and that valves in the open position are marked during the stimulation operations."[314] A POSITA would have known that a "tree" is a structure located above a wellbore that contains valves used for allowing or preventing flow into and/or out of the well.[315] Accordingly, a POSITA would immediately recognize the valve(s) installed on the trees (i.e., "tree valves") would be open "during the stimulation operations" and closed during isolation periods. Accordingly, the "tree valve" installed on tree **106a** would be used to communicate fluid to the "first well" from the pumping system through manifold **206**, and the valve is associated both with the manifold and the first well.

545. Accordingly, *Tolman* discloses Limitation 1.1.

b. <u>1.2: "in response to determining that the fluid communicated via the manifold has satisfied one or more conditions:"</u>

546. *Tolman* discloses this limitation. *Tolman* teaches the use of "a densitometer, a manifold check valve, a pressure gauge, a flow meter."[316] A

[314] Ex. 1006 at 7:28-33.

[315] *See*, *e.g.*, API 54 2007; 3.1.21 "Christmas tree: The valves and fittings assembled at the top of a completed well to control the flow of hydrocarbons and other fluids."

[316] Ex. 1006 at 2:59-61.

POSITA would have understood that a densitometer, pressure gauge and flow meter are each structures used to monitor fluid conditions (i.e., density, pressure, and flow rate). *Tolman* also teaches moving to the next stage of fracturing operations when the fracturing treatment is "completed".

547. *Tolman* discloses "various operations may be performed on [multiple] wells… in a concurrent or substantially simultaneous manner to reduce … time associated with stimulating wells. For exemplary purposes, these operations may be specific to JITP hydraulic proppant fracture stimulation operations, which may include the equipment described in FIG. 2."[317] Figure 3 shows an example of such operations:

[317] Ex. 1006 at 7:53-55.

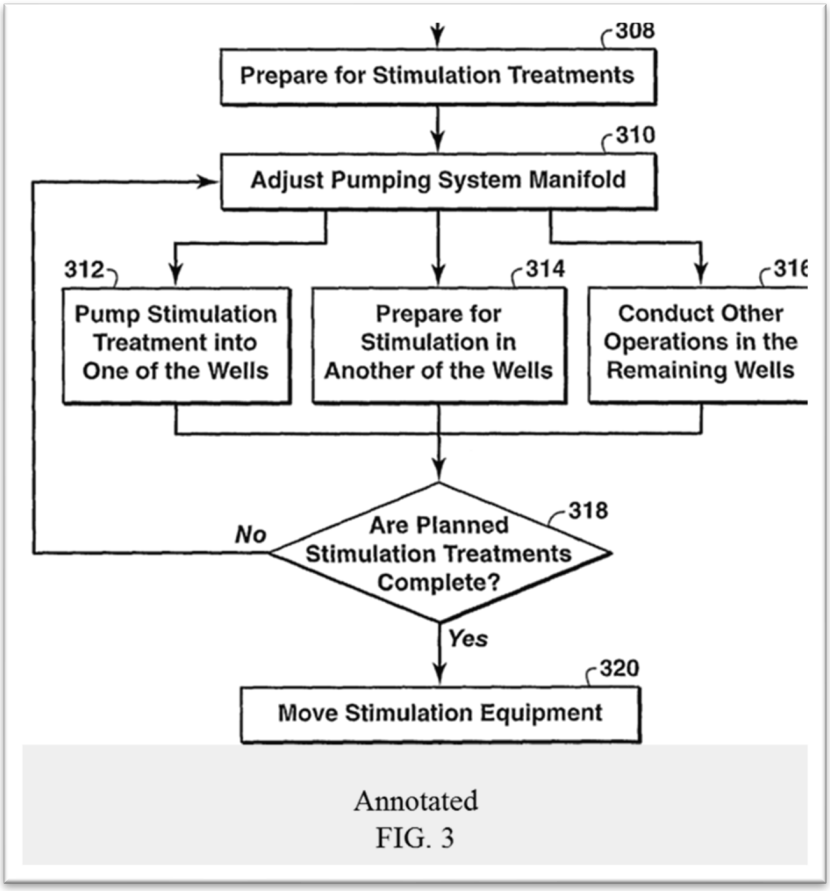

Annotated
FIG. 3

548. *Tolman* teaches, as part of the method of Fig. 3, "for the stimulation treatment to flow into the first well **104a**, the main manifold well valve **214** may be placed in the open position while the second manifold valve **216** and third manifold well valve **218** may be placed in the closed position".[318] As discussed above, a POSITA would have understood that it would be necessary for the "tree valve" associated with first well **104a** to be open in order to allow "the stimulation treatment to flow into the first well **104a**".

[318] Ex. 1006 at 8:57-61.

549. *Tolman* further discloses determining a fluid condition to move to the next stage. *Tolman* describes "After the first stimulation treatment is completed, a determination is made whether the planned stimulation treatments for the wells are completed, as shown in block **318** [of Fig. 3]. If the planned stimulation treatments for the wells are not complete, then the pumping system manifold **206** may be adjusted to prepare for the next well."[319] A POSITA would have immediately understood that a "fluid condition" such as volume of fluid pumped, pressure of fluid, or rate of fluid over time would be the basis for determining whether the first stimulation treatment (i.e. stage or sub-state) is completed. Further, *Tolman* teaches if "operations on the first well involve high pressure pumping… manipulating the manifold well valves and wellhead tree valves should not be concurrently performed." *Tolman*, 13:36-40. Thus, a POSITA would have found it obvious to determine if high pressure fluid was flowing to the first well prior to operating well valves.

550. Further, *Tolman* specifically describes example fluid conditions that would have been used to determine when the stimulation treatments, including the first stimulation treatment, are complete. *Tolman* describes:

> each stage of the JITP fracture treatment includes different sub-stages. These sub-stages are as follows: (a) 5,000 gallons of 2% potassium chloride water solution; (b) 2,000 gallons of guar-based linear gel fracture fluid containing 1 pound-per-gallon of proppant; (c) 3,000

[319] Ex. 1006 at 9:17-22.

> gallons of guar based linear gel fracture fluid containing 2 pounds-per-gallon of proppant; (d) 10,000 gallons of guar-based linear gel fracture fluid containing 3 pounds-per-gallon of proppant; and (e) 3,000 gallons of guar-based linear gel fracture fluid containing 4 pound-per-gallon of proppant such that 50,000 pounds of proppant and 23,000 gallons (approximately 547 barrels of fluid) of stimulation fluid are used in each stage of the JITP fracture treatment. Then, the pumping may be performed at an average rate of 20 barrels/minute. As a result, the pumping time for each stage may take approximately 27 minutes. Hence, the pumping time for a JITP fracture treatment may be approximately 2 hours and 15 minutes for each well.[320]

551. Accordingly, *Tolman* teaches several fluid conditions, including volumes (*e.g.*, 5,000 gallons, 2,000 gallons, 547 barrels, etc.), densities (*e.g.*, 1 pound per gallon, 2 pounds per gallon, 3 pounds per gallon) and flowrate over time (e.g., 20 barrels/minute) that are used to determine when a stage is complete, and it is time to move to the next step of the fracturing operation.

552. Accordingly, *Tolman* discloses Limitation 1.2.

c. <u>1.3: "opening a second valve; communicating fluid to a second well via the second valve; and"</u>

553. *Tolman* discloses this limitation. *Tolman* describes, as part of the method illustrated in Fig. 3, "[a]fter the first stimulation treatment is completed, a determination is made whether the planned stimulation treatments for the wells are completed, as shown in block **318**. If the planned stimulation treatments for the wells are not complete, then the pumping system manifold **206** may be adjusted to prepare

[320] Ex. 1006 at 10:10-28.

for the next well. That is, the valves in the pumping system manifold **206** are positioned in the appropriate open or closed positions to enable stimulation fluid injection into another of the wells, which is to receive the second stimulation treatment."[321] A POSITA would have understood that positioning the valves "in the appropriate open or closed positions to enable stimulation injection into another of the wells" is disclosure of "opening a second valve," including the manifold valves (*e.g.*, **216**) and the "tree valve" associated with the second valve, as claimed. Further, a POSITA would have understood that "opening a second valve" is in response to determining the fluid condition resulting in a "completed" stage, as discussed above.

554. *Tolman* further teaches that a second valve may be opened with at least one of the "first valves" still in the open position. *Tolman* teaches "in Fig. 4, the first well **104a** may be stimulated using the JITP fracture treatment. It should be noted that for this stimulation treatment, the main manifold valve **210** and first manifold well valve **214** are in the open position, while the second manifold well valve **216** and third manifold well valve are in the closed position to create a first well flow path."[322] Based on the teaching of *Tolman* that the flow path may include a "tree valve" associated with each well, a POSITA would understand that the "tree valve"

[321] Ex. 1006 at 9:17-26.

[322] Ex. 1006 at 10: 29-35.

associated with the first well would necessarily be open in order to "create a first well flow path."

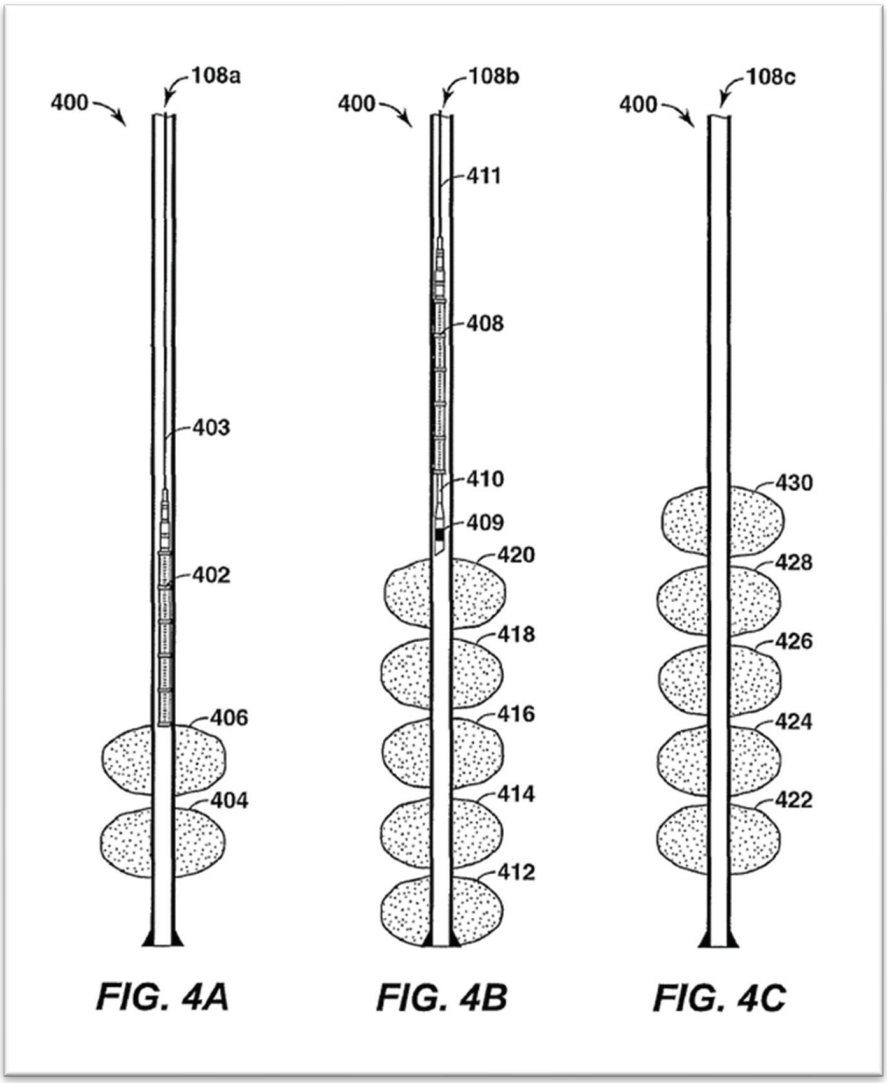

555. *Tolman* goes on to disclose "Fig. 5 illustrates the wells 104a-104c after the operations performed in FIG. 4 are completed."[323] Further, *Tolman* teaches "in FIG. 5, the first well **104a** is being flowed back after the placement of proppant

[323] Ex. 1006 at 11:4-5.

fractures **404**, **406**, **502**, **504** and **506** in the region **110a** of the subsurface formation 112 to force close the proppant fractures **404**, **406**, **502**, **504** and **506** and recover the stimulation fluid used to place the proppant fractures **404**, **406**, **502**, **504** and **506**, and produce hydrocarbons to the sales lines. Concurrently, the second well **104b** may be receiving the five-stage JITP hydraulic proppant fracture treatment. It should be noted that for this stimulation operation, the main manifold valve **210** and second manifold well valve **216** are in the open position, while the first manifold well valve **214** and third manifold well valve **218** are in the closed position to create a second well flow path."[324]

[324] Ex. 1006 at 11:8-21.

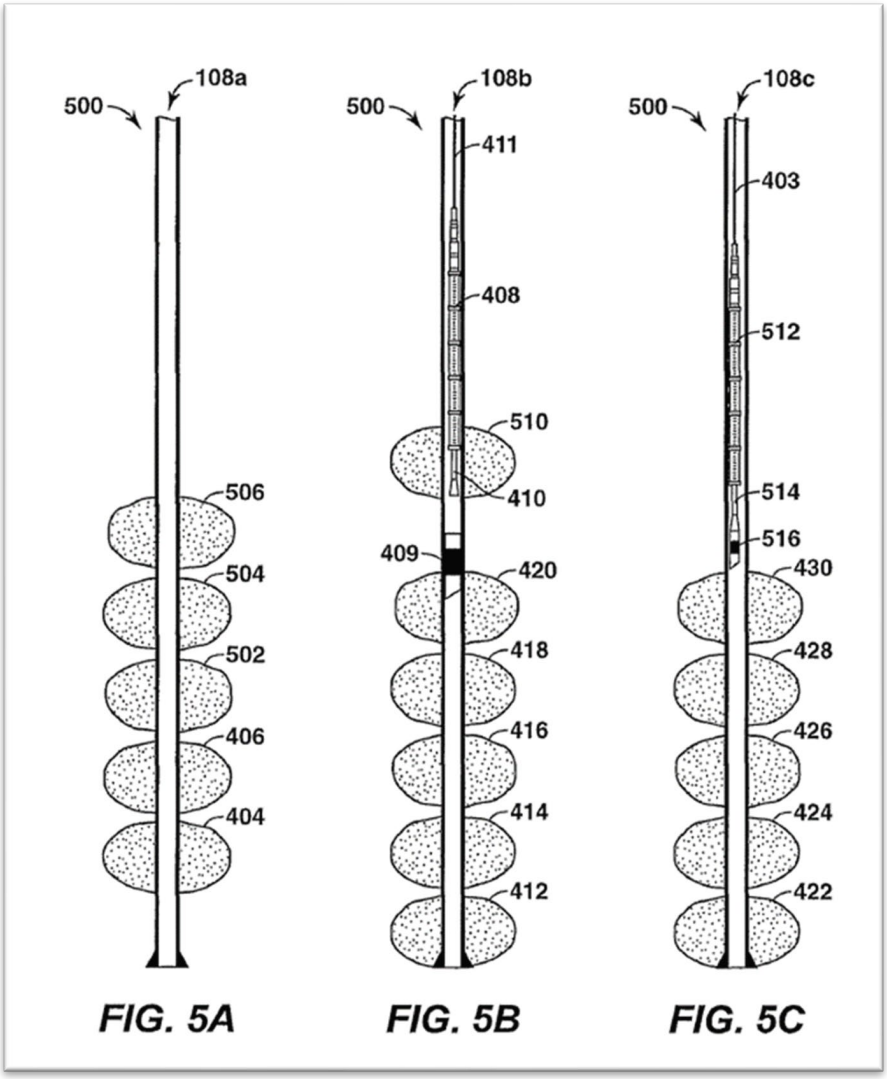

556. Accordingly, although manifold valve **214** is in the closed position, the "tree valve" associated with the first well would necessarily still be open in order to allow for "flowback" of the stimulation fluid from the first well treatment. *Tolman*'s disclosure, then, explicitly describes opening the second valve, and communicating fluid to a second well via the second valve, (**216** and the tree valve associated with the second well) while the first valve (tree valve associated with first well) is still open.

557. Further, *Tolman* contains additional explicit disclosure of communicating fluid into a second well concurrently with communicating fluid into a first well. As discussed above regarding 1.1, *Tolman* teaches configuring the manifold and valves to inject (communicate) a stimulation treatment in a first well. *Tolman* further discloses "Once the pumping system manifold 206 is configured, ***a stimulation treatment may be pumped into the one of the wells***, as shown in block **312**. ***Concurrently***, ***with the stimulation treatment*** of one of the wells, another well may be prepared for stimulation treatments, as shown in block **314**, while ***other operations may be conducted in the remaining wells,*** as shown in block **316**. The preparations may include … performing flow-back operations, performing other wireline operations, ***injecting fluids*** or materials, and performing plug removal operations and/or other operations, as discussed further below."[325] Accordingly, *Tolman* discloses injecting fluid (i.e. communicating fluid) into a second well, which would require at least the tree valve associated with the second well to be open (claimed second valve), while injecting stimulation treatment (i.e., fluid) into the first well, which would require at least the tree valve associated with the first well to be open (claimed first valve).

558. Thus, *Tolman* discloses Limitation 1.3.

[325] Ex. 1006 at 8:63 – 9:8 emphasis added.

d. 1.4: "closing the first valve after opening the second valve."

559. *Tolman* discloses this limitation. *Tolman* discloses "Fig. 6 illustrates the wells **104a-104c** after the operations performed in FIG. 5 are completed. As shown in the partial view **600**, the flowback operation has been completed and the first well **104a** has been shut-in.[326] A POSITA would have immediately understood that a well that has been "shut-in" has all valves associated with the well closed (including the tree valve) in order to prevent flow either into or out of the well.[327] A POSITA would also recognize that *Tolman* is teaching closing this claimed first valve after the opening the second valve. Further, *Tolman* makes it clear that at least one "second valve" is still open as it teaches "[c]oncurrently, in the second well **104b**, stimulation treatments are completed [and] the second well is flowed back".[328] As discussed above, a well that is being flowed back has the tree valve (one of the claimed second valves) in the open position.

[326] Ex. 1006 at 11:46-49.

[327] *See*, e.g., Sections IX.A-G.

[328] Ex. 1006 at 11:63-67.

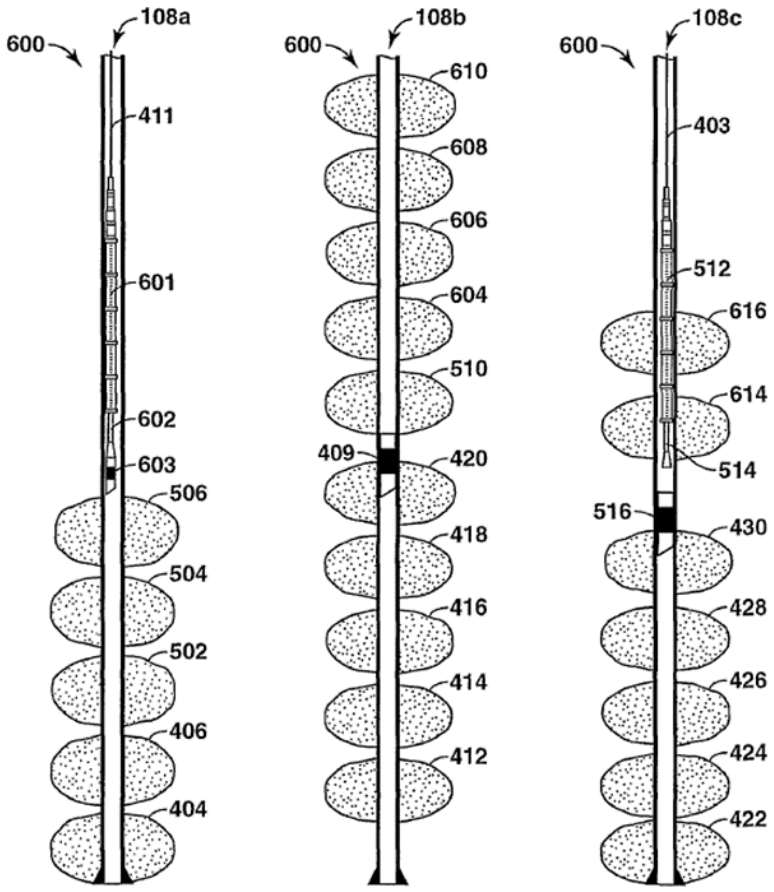

FIG. 6A FIG. 6B FIG. 6C

560. Thus, *Tolman* discloses Limitation 1.4.

561. Because *Tolman* discloses each and every limitation of Claim 1, *Tolman* anticipates Claim 1, or in the alternative, renders obvious Claim 1 for the reasons discussed above.

B. <u>DEPENDENT CLAIM 2</u>

562. Claim 2 depends from Claim 1. In addition to the disclosure of the limitations of Claim 1 discussed above, *Tolman* discloses the additional limitations of Claim 2:

a. <u>2.1: "2. The method of claim 1, further comprising: communicating fluid to a third well via the manifold and a third valve, the third valve being associated with both the manifold and the third well; and"</u>

563. Limitation 2.1 is disclosed by *Tolman*. As discussed above regarding 1.1, *Tolman* discloses communicating fluid to a well in a multi-well environment. As was well known to a POSITA, a well pad may include one, two, three, four, or more wells. *Tolman* explicitly describes a third well and performing the same operations as described above regarding the second well. *Tolman* teaches, for example in Fig. 2, a third well and a third valve **218** (annotated in pink) (and, as described above, the tree valve associated with the third well).

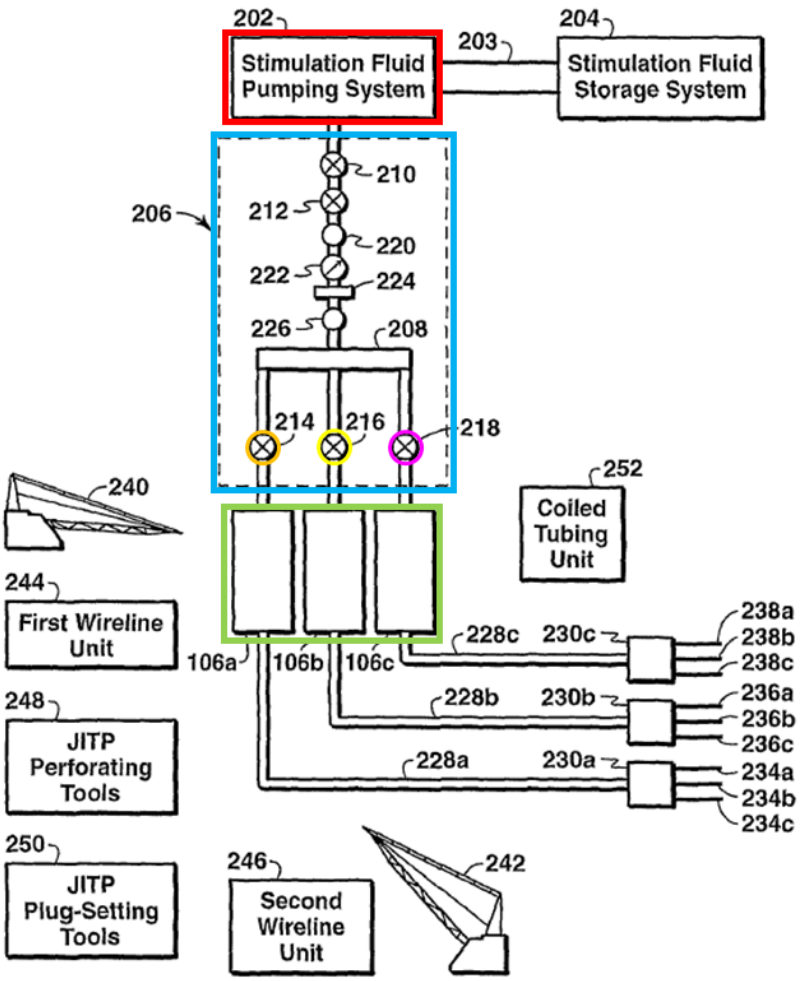

FIG. 2

564. *Tolman* further teaches "Through the coupling of the valves **210**, **212**, **214**, **216** and **218**, flow paths may be provided through the pumping system manifold **206**. Because the first manifold well valve **214**, second manifold well valve **216**, and a third manifold well valve **218** may be set to an open or closed position, stimulation fluid may be injected into one or more of the wells **104a**-l **04c**, while the other wells **104a-104c** may be isolated by at least one of the valves **214-218** from the stimulation

fluid pumping system **202**."[329] A POSITA would have known that, in order for a flow path to be created to the third well not only valve **218** would be open, but also the "tree valve" associated with the third well.

565. This claim does not require the communication of fluid to the third well to be in any temporal relationship to the operations of the second well and the second valve. However, to the extent that Patent Owner claims that such a temporal relationship is inherent or implied in the claims, *Tolman* teaches communicating fluid to the third well after opening the second valve. In addition to the general disclosure of injecting fluid into multiple wells,[330] *Tolman* discloses "the second well **104b** is flowed back after placement of proppant fractures **510**, **604**, **606**, **608** and **610** to force close the fractures and recover the stimulation fluid used when placing the proppant fractures and produce hydrocarbons to the sales lines. Also, in another concurrent operation, the composite frac plug **516** has been set in the third well **104c** and the pumping of a five-stage JITP proppant fracture treatment has created proppant fractures **614** and **616**. It should be noted that for this stimulation treatment, the main manifold valve **210** and third manifold well valve **218** are in the open position".[331] As described above, in order for the second well to be "flowed back" at

[329] Ex. 1006 at 7:19-27.

[330] *See*, *e.g.*, Ex. 1006 at 8:63 – 9:8.

[331] Ex. 1006 11:66 – 12:9.

least the tree valve associated with the second well (claimed second valve) must be in the open position. Concurrently, then, the claimed third valve (valve **218** and tree valve associated with the third well) are opened.

566. Thus, *Tolman* discloses Limitation 2.1.

b. <u>2.2: "in response to determining that the fluid communicated via the manifold has satisfied the one or more conditions:"</u>

567. Limitation 2.2 is identical to Limitation 1.2 and is disclosed by *Tolman* for the same reasons as those discussed in Section XV.A.b.

c. <u>2.3: "opening a fourth valve;</u>

568. As discussed above regarding 1.1, 1.3 and 2.1, *Tolman* discloses opening valves to communicate fluid to a well in a multi-well environment. As was well known to a POSITA, a well pad may include one, two, three, four, or more wells. Further, *Tolman* discloses performing sequential and concurrent pumping and preparation operations on multiple multi-well systems, including a first multi-well system with first and second wells connected to a first pumping system via a first manifold and a second multi-well system with third and fourth wells connected to a second pumping system via a second manifold.[332] In another example, Tolman states that the system shown in Fig. 2 (including a manifold connecting a pumping system

[332] Ex. 1006 at 2:63-3:15.

to three wells) could be repeated and operated in the same manner.[333] In such embodiments, there would necessarily be a fourth well operated in the same manner, including opening/closing associated valves for pumping and preparation operations, as described for the first, second, and third wells in the first multi-well system.

569. Thus, a POSITA would understand that "multiple wells" would include a fourth well, and it would have been obvious to a POSITA to perform the same method or sequence of the first, second and third wells on a fourth well, and any additional wells based on *Tolman's* teaching of performing the method on multiple wells (e.g., on first, second, third, and fourth wells).

570. Moreover, mere repetition of elements has no patentable significance unless a new and unexpected result is produced. Here, performing the method of Claim 1 on additional wells in the same environment (i.e. fourth well and fourth valve) would be performed in the same way and produce the same expected results as the first and second well and therefore would have been obvious to a POSITA.

571. Thus, *Tolman* discloses and/or renders obvious Limitation 2.3.

[333] Ex. 1006 at 15:55-16:3.

d. 2.4: "communicating fluid to a fourth well via the fourth valve; and"

572. Limitation 2.4 is disclosed and would have been obvious to a POSITA in light of the teachings of *Tolman* along with the knowledge of a POSITA for the same reasons as those discussed regarding 2.2 and 2.3. Performing the method of Claim 1 on additional wells in the same environment (i.e. fourth well and fourth valve) would be performed in the same way and produce the same expected results as the first and second well and therefore would have been obvious to a POSITA. Thus, *Tolman* discloses or renders obvious Limitation 2.4.

e. 2.5: "closing the third valve after opening the fourth valve."

573. Limitation 2.5 is disclosed by and would have been obvious to a POSITA in light of the teachings of *Tolman* along with the knowledge of a POSITA. As discussed above regarding Claim 1, *Tolman* teaches closing and opening valves in response to fluid conditions. Further, *Tolman* discloses closing a first valve after opening a second valve as discussed above regarding 1.3. As was well known to a POSITA, a well pad may include one, two, three, four, or more wells. Thus, although *Tolman* discusses a first well, a second well, and a third well in detail, it would have been obvious to a POSITA to perform the same method or sequence of the first, second and third wells on a fourth well, and any additional wells based on *Tolman's* teaching of performing the method on multiple wells (i.e. first, second and third well). Additionally, *Tolman* teaches using multiple multi-well systems in the same

manner as described with the example multi-well system including three wells.[334] A POSITA would understand that such embodiments would include closing a third valve to a third well after opening a fourth valve to a fourth well in order to sequentially and simultaneously perform pumping and preparation operations on the multiple wells in multiple multi-well systems, as taught in *Tolman*.

574. Moreover, mere repetition of elements has no patentable significance unless a new and unexpected result is produced. Here, performing the method of Claim 1 on additional wells in the same environment (i.e. third valve, fourth well and fourth valve) would be performed in the same way and produce the same expected results as the first, second and third wells and therefore would have been obvious to a POSITA.

575. Accordingly, *Tolman* discloses and/or renders obvious Limitation 2.5.

576. Because *Tolman* discloses each and every limitation of Claim 2, *Tolman* anticipates Claim 2, or in the alternative, renders obvious Claim 2 for the reasons discussed above.

C. DEPENDENT CLAIM 3

577. Dependent Claim 3 depends from Claim 2, which depends from Claim 1. In addition to the disclosure of the limitations of Claims 1 and 2 discussed above, *Tolman* discloses the additional limitations of Claim 3:

[334] Ex. 1006 at 15:55-16:3.

a. 3.1: "3. The method of claim 2, wherein: the first valve is closed after opening both the second valve and the fourth valve; and/or"

578. *Tolman* discloses this limitation. *Tolman* teaches the following:[335]

> The method comprises connecting a first well and a second well to a first stimulation fluid pumping system via a first pumping system manifold; connecting a third well and a fourth well to a second stimulation fluid pumping system via a second pumping manifold; adjusting the first pumping system manifold to provide a first stimulation treatment to the first well and to isolate the second well for other operations; adjusting the second pumping system manifold to provide a second stimulation treatment to the third well and to isolate the fourth well; and pumping the first stimulation treatment into the first well and the second stimulation treatment into the third well concurrently with the pumping of the first stimulation treatment. Further, the method may also comprise preparing the second well for a third stimulation treatment concurrently with the pumping of the first stimulation treatment; and preparing the fourth well for a fourth stimulation treatment concurrently with the pumping of the second stimulation treatment.

579. Based on this disclosure, a POSITA would understand that valves are open to provide stimulation treatment in the first and third wells concurrently, and then valves are open to provide stimulation treatment to the second and fourth wells concurrently.

580. Further, as discussed above regarding 1.4, flowback operations occur in the first well while stimulation treatment is being injected into the second well. This necessitates the first valve (tree valve associated with first well) to be open at

[335] Ex. 1006 at 2:64 – 3:15.

the same time the second valve is open to allow treatment into the first well. As *Tolman* teaches second and fourth wells being treated concurrently, the valve(s) on the second and fourth well would both be open while the first well is being flowed back. *Tolman* further teaches, after flowback operations are completed, the first valve is closed.

581. Additionally, *Tolman* teaches that preparation operations may include "injecting fluid" into the well being prepared.[336] Thus, in *Tolman*'s above disclosure, a POSITA would understand that while valves are open to provide stimulation treatment in the first and third wells concurrently, the valves to the second and fourth wells are also open when fluid is injected for a preparation operation. Then, after the first and third wells' stimulation treatments are completed, the first and third vales are closed.[337]

582. Accordingly, *Tolman* discloses closing a first valve to a first well after second and fourth valves to second and fourth wells are open.

583. Additionally, Claim limitation 3.1 is the first prong in an "and/or" Claim. Thus, for at least this reason, *Tolman* anticipates and/or renders obvious Claim 3. Moreover, as discussed below, *Tolman* explicitly discloses the second prong of the "and/or" statement contained in 3.2.

---

[336] Ex. 1006 at 8:29-38.

[337] See e.g., Ex. 1006 at 7:21-27, 9:17-26.

b. 3.2: "the third valve is closed after opening both the second valve and the fourth valve."

584. As discussed above regarding Limitation 3.1, *Tolman* teaches treatment into second and fourth wells simultaneously, after treatment of a third well.[338] This necessitates valve(s) associated with both the second and fourth wells be opened after closing a valve to the third well. Further, as discussed with Limitation 2.5, *Tolman* teaches the third well is being flowed back during treatment of the second well. This necessitates a third valve (a tree valve associated with third well) to be open at the same time the valve to the well being treated is open. As *Tolman* teaches second and fourth wells being treated concurrently, the valve(s) to the second and fourth wells would both be open while the third well is being flowed back. *Tolman* further discloses that after flowback operations are completed, the well is shut in, which would include closing the third valve.[339]

585. Additionally, as *Tolman* discloses closing the first valve after opening the second and fourth valves, as discussed above regarding Limitation 3.1, and *Tolman* teaches concurrent treatment of the first and third well, it would have been obvious to a POSITA to apply the teachings of the first valve to the third valve so

[338] See Ex. 1006 at 2:63-3:15.

[339] Ex. 1006 at 11:31-33.

that the third valve would be closed after opening the second and fourth valves. Accordingly, *Tolman* discloses Limitation 3.2.

586. Because *Tolman* discloses each and every limitation of Claim 3, *Tolman* anticipates Claim 3, or in the alternative, renders obvious Claim 3 for the reasons discussed above.

D. DEPENDENT CLAIM 4

587. Dependent Claim 4 depends from Claim 1. In addition to the disclosure of the limitations of Claim 1 discussed above, *Tolman* discloses the additional limitations of Claim 4:

a. 4: "4. The method of claim 1, wherein the one or more conditions include one or more flow rate conditions."

588. *Tolman* discloses this limitation. As discussed above regarding Claim Limitation 1.2, *Tolman* discloses the use of flowmeters. *Tolman* teaches the use of "a densitometer, a manifold check valve, a pressure gauge, a flow meter".[340] A POSITA would have understood that a densitometer, pressure gauge and flow meter are each structures used to monitor fluid conditions (i.e., density, pressure and flow rate). *Tolman* further give examples of specific fluid conditions that signal the end of a particular stage, and trigger movement to the next step, these including various

[340] Ex. 1006 at 2:59-61.

volumes (which are a function of flowrate and time).[341] Explicitly, *Tolman* states that "the pumping may be performed at an average rate of 20 barrels/minute. As a result, the pumping time for each stage may take approximately 27 minutes. Hence, the pumping time for a JITP fracture treatment may be approximately 2 hours and 15 minutes for each well." [342] A POSITA would have understood that determining the stimulation treatment to a first well was "completed" would have included, for example, determining the flow of stimulation fluid into the first well had stopped or was otherwise below "an upper threshold" of "an average rate of 20 barrels/minute." Accordingly, *Tolman* discloses flowrate as one of the fluid conditions being determined.

589. Thus, *Tolman* discloses the limitations of Claim 4, and therefore, *Tolman* anticipates Claim 4, or in the alternative, renders obvious Claim 4 for the reasons discussed above.

E. DEPENDENT CLAIM 5

590. Dependent Claim 5 depends from Claim 4, which depends from Claim 1. In addition to the disclosure of the limitations of Claims 1 and 4 discussed above, *Tolman* discloses the additional limitations of Claim 5:

[341] Ex. 1006 at 10:6-22.

[342] Ex. 1006 at 10:10-28.

a. <u>5: "5. The method of claim 4, wherein the fluid communicated via the manifold has satisfied the one or more flow rate conditions when a flow rate of the fluid is below an upper threshold, above a lower threshold, or both."</u>

591. This claim limitation merely sets forth optional flow rate measurements, including flow rates below an upper flow rate threshold, or above a lower flow rate threshold, or both, and thus only one needs to be shown in the prior art. As discussed above regarding Claim 1, Tolman gives example conditions for a stimulation treatment, including pumping "at an average rate of 20 barrels/minute."[343] After "a determination is made whether the planned stimulation treatments" for the first well is complete, stimulation fluid may be injected into a next prepared well.[344] A POSITA would have understood that determining the stimulation treatment to a first well was "completed" would have included determining the flow of stimulation fluid into the first well had stopped or was otherwise below "an upper threshold" of "an average rate of 20 barrels/minute."

592. Accordingly, *Tolman* anticipates Claim 5, or in the alternative, renders obvious Claim 5 for the reasons discussed above.

---

[343] Ex. 1006 at 10:22-23.

[344] Ex. 1006 at 8:29-38, 9:17-26.

F. DEPENDENT CLAIM 6

593. Dependent Claim 6 depends from Claim 4, which depends from Claim 1. In addition to the disclosure of the limitations of Claims 1 and 4 discussed above, *Carr* discloses the additional limitations of Claim 6:

> **a. 6. The method of claim 4, wherein the fluid communicated via the manifold has not satisfied the one or more flow rate conditions when a flow rate of the fluid is above an upper threshold or below a lower threshold.**

594. Claim 6 essentially defines the portion excluded by Claim 5. In other words, Claim 6 merely says that if the flow rates conditions in Claim 5 are not met, then the flow rate measured "has not been satisfied." Thus, this Claim does not add anything more technically to Claim 5 other than the use of the phrase "not met." In the example provided by *Tolman*, the stimulation treatment including pumping "performed at an average rate of 20 barrels/minute" would be determined to be completed when the flowrate is below the average rate, such as a zero flowrate when the flowrate has stopped, and would be determined to not be completed when the flowrate is within or above "an upper threshold" of the average rate.

595. Thus, because *Tolman* discloses meeting certain flow rate thresholds, as discussed above, *Tolman* also discloses that when the flow rate does not meet the desired threshold, the measured flow rate "has not satisfied the one or more flow rate conditions." Moreover, this is standard practice for any flow system – if a measured flow rate is outside the required flow rate, then a flow rate condition is not met.

596. Accordingly, *Tolman* anticipates Claim 6, or in the alternative, renders obvious Claim 6 for the reasons discussed above.

G. DEPENDENT CLAIM 7

597. Dependent Claim 7 depends from Claim 1. In addition to the disclosure of the limitations of Claim 1 discussed above, *Carr* discloses the additional limitations of Claim 7:

a. 7: "7. The method of claim 1, further comprising: pumping the fluid into the manifold."

598. *Tolman* discloses this limitation. As discussed regarding Claim 1, *Tolman* discloses teaches "[t]hrough the coupling of the valves **210, 212, 214, 216** and **218**, flow paths may be provided through the pumping system manifold **206**. Because the first manifold well valve **214**, second manifold well valve **216**, and a third manifold well valve **218** may be set to an open or closed position, stimulation fluid may be injected into one or more of the wells **104a-l 04c**, while the other wells **104a-104c** may be isolated by at least one of the valves **214-218** from the stimulation fluid pumping system **202**."[345]

599. Further, in Fig. 2, *Tolman* discloses a "Stimulation Fluid Pumping System" (annotated in red) which directs fluid into manifold **206**. (annotated in blue):

[345] Ex. 1006 at 7:20-27.

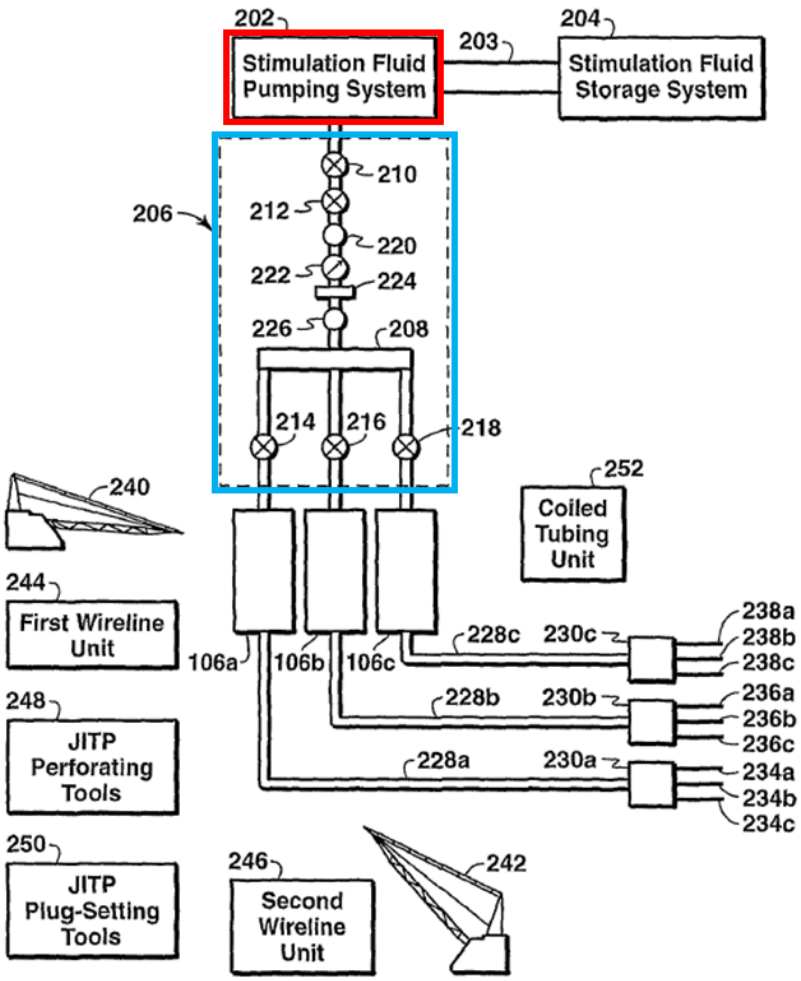

FIG. 2

600. Additionally, Fig. 3 of *Tolman* discloses the step of "Pump Stimulation Treatment into One of the Wells" (annotated in red) after the step of "Adjust Pumping System Manifold" (annotated in blue):

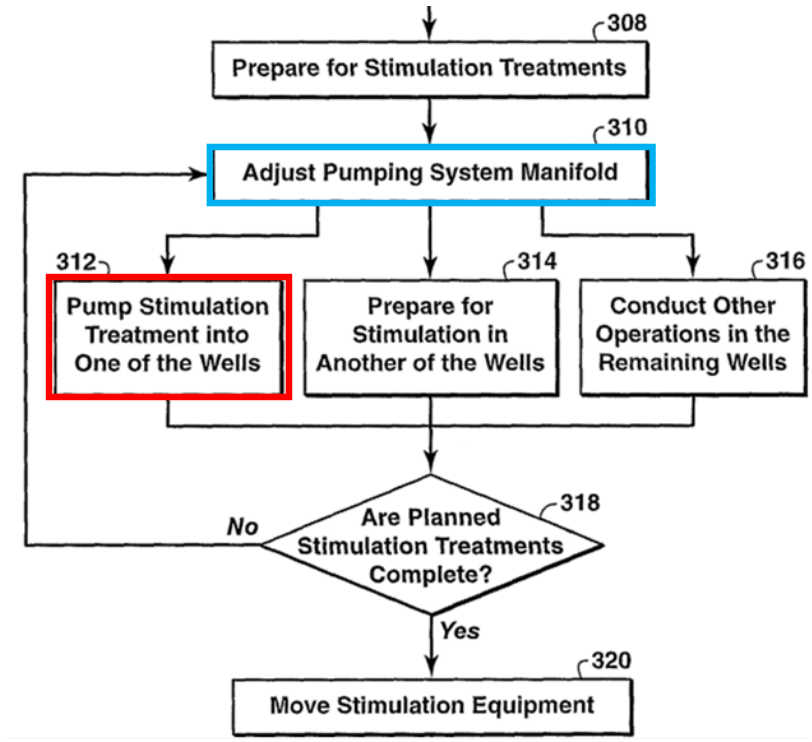

Annotated
FIG. 3

601. Thus, *Tolman* discloses the limitations of Claim 7. Accordingly, *Tolman* anticipates Claim 7, or in the alternative, renders obvious Claim 7 for the reasons discussed above.

H. <u>INDEPENDENT CLAIM 8</u>

602. Dependent Claim 8 depends from Claim 1. In addition to the disclosure of the limitations of Claim 1 discussed above, *Tolman* discloses the additional limitations of Claim 8:

a. **8: "8. The method of claim 1, further comprising: determining that the fluid communicated via the manifold has satisfied the one or more conditions."**

603. *Tolman* discloses this limitation. The limitation is also recited in Limitations 1.2and 1.4 and is discussed in Sections XV.A.b-XV.A.c. above in the discussions of both Limitations 1.2 and 1.3. Accordingly, *Tolman* discloses the limitations of Claim 8 for the same reasons as those discussed above regarding Limitations 1.2-1.3 in Sections XV.A.bXV.A.c. Accordingly, *Tolman* anticipates Claim 8, or in the alternative, renders obvious Claim 8 for the reasons discussed above.

I. DEPENDENT CLAIM 9

604. Dependent Claim 9 depends from Claim 8, which depends from Claim 1. In addition to the disclosure of the limitations of Claims 1 and 8 discussed above, *Tolman* discloses the additional limitations of Claim 9:

a. **9. The method of claim 8, wherein determining that the fluid communicated via the manifold has satisfied the one or more flow rate conditions comprises determining that a flow rate of the fluid is below an upper threshold, above a lower threshold, or both.**

605. Except for depending from Claim 8, Claim 9 is identical to Claim 5 and the limitations of Claim 9 are disclosed by *Tolman* for the same reasons as those described above regarding Claim 5 in Section XV.E. Accordingly, *Tolman*

anticipates Claim 9, or in the alternative, renders obvious Claim 9 for the reasons discussed above.

J. DEPENDENT CLAIM 10

606. Dependent Claim 10 depends from Claim 1. In addition to the disclosure of the limitations of Claim 1 discussed above, *Carr* discloses the additional limitations of Claim 10:

a. 10: "10. The method of claim 1, wherein the fluid communicated via the manifold is hydraulic fracturing fluid."

607. *Tolman* discloses the limitations of Claim 10. *Tolman* teaches that a "stimulation fluid pumping system" pumps stimulation treatment fluid from a "stimulation fluid storage system," through a manifold to one or more selected wells.[346] *Tolman* also teaches that the stimulation treatments can involve "hydraulic fracturing," where the fluids are injected "into a formation at high pressures and rates [such] that the reservoir rock fails and granular proppant material, such as sand, ceramic beads, or other materials, is injected to hold the fracture(s) open."[347] Thus, a POSITA would understand that Tolman's "stimulation treatment" fluid includes hydraulic fracturing fluid.

[346] Ex. 1006 at Abstract, Figure 2, 8:44-56, 63-65.

[347] Ex. 1006 at 15:25-31.

608. Accordingly, *Tolman* discloses the limitations of Claim 10, and therefore, *Tolman* anticipates Claim 10, or in the alternative, renders obvious Claim 10 for the reasons discussed above.

K. DEPENDENT CLAIM 11

609. Dependent Claim 11 depends from Claim 1. In addition to the disclosure of the limitations of Claim 1 discussed above, *Carr* discloses the additional limitations of Claim 11:

a. "11. The method of claim 1, wherein: the first valve is a first zipper valve; and/or the second valve is a second zipper valve."

610. *Tolman* discloses this limitation. Tolman discloses "apparatus, method, and system to enable reliable and cost-effective execution of concurrent or simultaneous wellbore preparation and stimulation operations in multiple wellbores located at a single surface location."[348] A POSITA would have immediately understood the disclosure of *Tolman* to be a "zipper frac operation."[349] Further, *Tolman* discloses a method where "simultaneous operations are conducted to prepare other wells for the stimulation treatments with reduced non-pumping time between each of the stimulation treatments. The above process of sequentially manipulating the valves of the pumping system manifold, as shown in block **310**, and pumping

[348] Ex. 1006 at 1:64-2:4.

[349] *See*, *e.g.*, Section IX.D.

stimulation treatments in the wells, while simultaneously performing operations to prepare other wells for further stimulation treatments may be repeated until each of the planned stimulation treatments is completed."[350] This is another description of a "zipper frac" operation which was a well-known process long before the '770 Patent.[351]

611. A POSITA would have understood a "zipper valve" to simply be a valve used in a zipper fracturing operation, typically between a discharge manifold (*e.g.*, a zipper manifold) and the wellhead. These valves would be used to swap fracturing operations from one wellhead to another as described above in Section IX.D. The '770 Patent contains little written description of the structure of a "zipper valve" other than indicating zipper valves may be, for example, gate valves, and communicate fluid between the zipper manifold and a well.[352] The figures of the '770 Patent show a "zipper valve" consistent with the general knowledge of a POSITA.

612. According to the '770 Patent, "[r]eferring to Figs. 2A through 2G, … the zipper valves **170a-b** (such as, for example, gate valves) operably coupled to, and adapted communicate fluid between, the zipper manifold **145** [annotated in blue]

---

[350] Ex. 1006 at 9:30-38.

[351] *See*, *e.g.*, IX.D.

[352] Ex. 1001 at 7:60-63, 14:9-11, 23-26, 30-34, and 43-48.

and the well **105A** [annotated in green]."[353] Fig 2A is duplicated and annotated below. A POSITA would have immediately recognized that "gate valves" were a well-known type of valve which had been used in O&G operations, including fracturing, for decades before the '770 Patent.

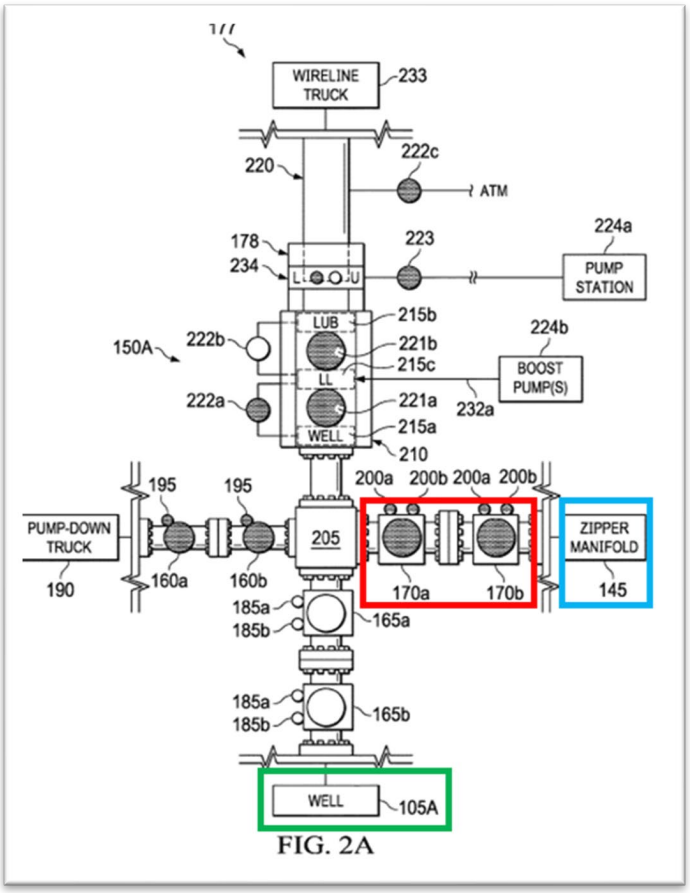

FIG. 2A

613. *Tolman* discloses zipper valves (e.g. **214, 216, 218**) in the same location and with the same function as zipper valves **170a-170b** of the '770 Patent. Fig. 1 of *Tolman* "is an exemplary production system having multiple wells located on a

[353] Ex. 1001 7:47-8:5.

surface pad in accordance with certain aspects of the present techniques"[354] of the disclosure of *Tolman*. Further, "[t]he pumping system manifold **206** may include various components utilized to manage access to the wells **104a-l04c** from the stimulation fluid pumping system **202**. For instance, … a first manifold well valve **214**, second manifold well valve **216**, and a third manifold well valve **218** may be located near each of the trees **106a-106c**, respectively."[355]

[354] Ex. 1006 at 3:23-25.

[355] Ex. 1006 at 8:49-61.

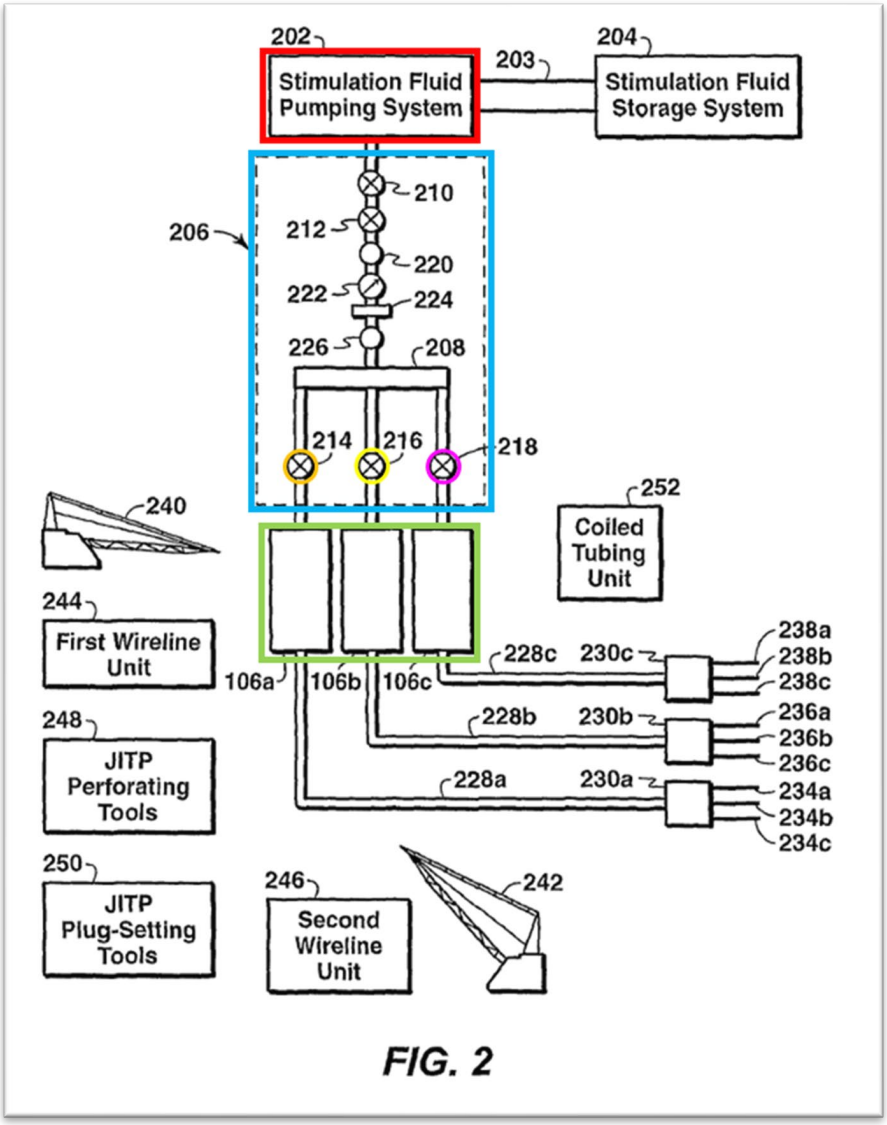

FIG. 2

Tolman Fig. 2 annotated

614. Further, *Tolman* contains disclosure of the type of valves used for the manifold well valves which is consistent with the description contained in the ’770 Patent for “zipper valves”. *Tolman* discloses “[v]alves **210**, **214**, **216,** and **218** may be any type of valve, including those routinely used in oil-field applications, such as

gate valves or ball valves,"[356] This disclosure is describing a zipper frac operation and valves **214, 216** and **218** to be "zipper valves".

615. To the extent that the Board determines that *Tolman* does not explicitly disclose zipper valves, it would have been obvious for a POSITA to include "zipper valves" (e.g. gate valves) on the manifold to facilitate the fracturing operations of the wells, as was well known in the art.[357]

616. Thus, *Tolman* discloses the limitations of Claim 11.

617. Accordingly, *Tolman* anticipates Claim 11, or in the alternative, renders obvious Claim 11 for the reasons discussed above.

L. DEPENDENT CLAIM 12

618. Dependent Claim 12 depends from Claim 1. In addition to the disclosure of the limitations of Claim 1 discussed above, *Tolman* discloses the additional limitations of Claim 12:

a. 12.1: "12. The method of claim 1, wherein the second valve is associated with both the manifold and the second well; and"

619. *Tolman* discloses this limitation. As shown in Fig. 2, *Tolman* shows "well tree **106b**" (annotated in red) associated with (receiving fluid from) manifold

[356] Ex. 1006 at 6:65-67.

[357] *See*, *e.g.*, Section IX.D.

206. Fig. 2 further shows valve **216** which is associated with both manifold 206 and tree **106b** (and the associated second well).

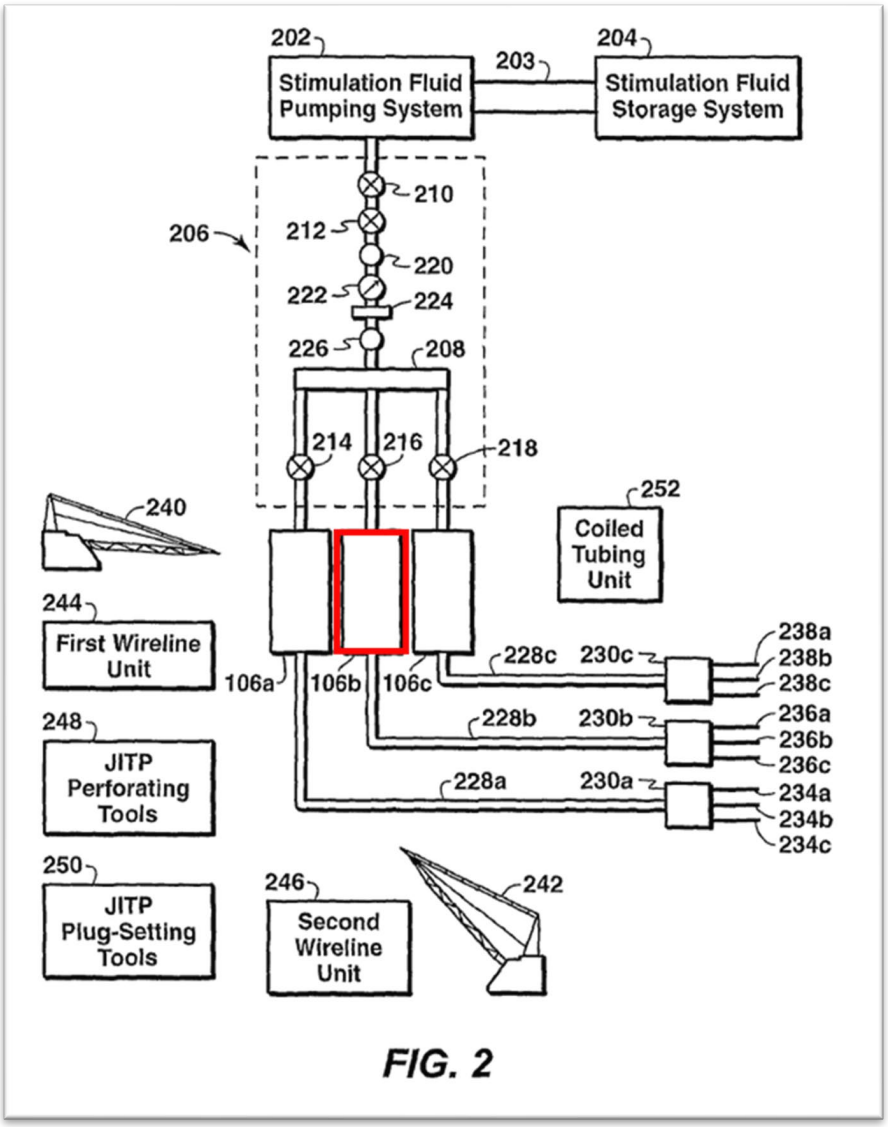

FIG. 2

620. Further, *Tolman* teaches "In this well system, a plurality of oil field trees is located on a surface pad, wherein each of the plurality of oil field trees is associated with one of a plurality of wells. A pumping system manifold connects a

stimulation fluid pumping system to the plurality of oil field trees."[358] A POSITA would have known that an "oil field tree" is a structure located above a wellbore that contains valves which isolate the wellbore when closed and allow fluid to flow into or out of the wellbore when open. [359] Further, Tolman teaches "a valve (not shown) on the tree **106a-106c** [is] closed during any given isolation from the other wells. Additionally, it may also be preferred that at least one or more valves be installed on trees 106a-106c and that valves in the open position are marked during the stimulation operations."[360]

621. Accordingly, a POSITA would immediately recognize the valve(s) installed on the trees (i.e., "tree valves") would be open "during the stimulation operations" and closed during shut-in periods. Thus, the "tree valve" installed on tree **106b** would be used to communicate fluid to the "second well" from the pumping system through manifold **206**, and the valve is associated both with the manifold and the second well. The "tree valve" associated with the second well (claimed second valve) would, accordingly, also be associated with manifold **206**.

622. Thus, *Tolman* discloses Limitation 12.1.

---

[358] Ex. 1006 at 2:41-45.

[359] *See*, *e.g.*, API 54 2007; 3.1.21 "Christmas tree: The valves and fittings assembled at the top of a completed well to control the flow of hydrocarbons and other fluids."

[360] Ex. 1006 at 7:29-33.

b. <u>12.2: "wherein communicating fluid to the second well via the second valve comprises communicating fluid to the second well via the manifold and the second valve."</u>

623. As discussed above regarding 12.1, *Tolman* teaches communicating fluid to second well via a manifold **206** and a second valve (tree valve) installed on tree **106b**. Accordingly, *Tolman* discloses Limitation 12.2.

624. Because *Tolman* discloses each and every limitation of Claim 12, *Tolman* anticipates Claim 12, or in the alternative, renders obvious Claim 12 for the reasons discussed above.

M. <u>DEPENDENT CLAIM 13</u>

625. Dependent Claim 13 depends from Claim 12. In addition to the disclosure of the limitations of Claim 12 discussed above, *Tolman* discloses the additional limitations of Claim 13:

a. <u>" 13. The method of claim 12, wherein the fluid communicated via the manifold is hydraulic fracturing fluid."</u>

626. With the exception of depending from Claim 12, which depends from Claim 1, the limitation of Claim 13 is identical to that of Claim 10. Thus, *Tolman* discloses the limitations of Claim 13 for the same reasons as those discussed regarding Claim 10 in Section XV.J above. Accordingly, *Tolman* anticipates Claim 13, or in the alternative, renders obvious Claim 13 for the reasons discussed above.

N. INDEPENDENT CLAIM 14

627. It is my opinion that *Tolman* discloses Claim 14 of the '770 Patent. Details regarding the specific disclosures of *Tolman* are contained in the subsections following. To the extent the Board determines that *Tolman* does not explicitly disclose the limitations of Claim 14, a POSITA would have found the apparatus of Claim 14 to be obvious in light of the disclosure and teachings of *Tolman*.

a. 14.1: "14. An apparatus, comprising: a non-transitory computer readable medium; and a plurality of instructions stored on the non-transitory computer readable medium and executable by one or more processors, wherein, when the instructions are executed by the one or more processors, the following steps are executed:"

628. *Tolman* discloses this limitation. A POSITA would have understood the claimed apparatus to be a generic computer system. Tolman teaches the use of such a computer system to control the valves and pumps:[361]

> Further, in another alternative embodiment, it may be beneficial to have automated devices, such as processor based devices, which are utilized for the stimulation operations. For instance, the stimulation fluid pumping system **202** may be automated and controlled by a processor based device, such as a computer system. With the computer system, the stimulation treatment schedules for each individual stimulation treatment may be pre-programmed into the computer system. Also, the pumping system manifold **206** may include a processor based device, such as a computer system, as well. The computer system for the pumping system manifold **206** may include mechanisms to adjust the valves **210**, **214**, **216** and **218** between the open and closed positions, and communicate with the various gauges **220**, **222** and **226** and ball-sealer injector **224**. In fact, the computer systems of the stimulation

[361] Ex. 1006 at 14:3-22.

> fluid pumping system **202** and the pumping system manifold **206** may be configured to interact with each other to manage the pumping stimulation treatment process for the plurality of wells **104a-104c.**

629. A POSITA would have understood that a processor-based device, such as a computer system, as disclosed by *Tolman* to comprise the exact components claimed in Claim Limitation 14.1. A computer system used to control the pumping and valve system of *Tolman* necessarily contains a non-transitory computer readable medium (e.g. hard drive, optical drive, memory) for storing instructions (i.e., schedules or programs), and that the instruction would be executed by the processor(s). This is nothing more than a generic computer system well-known for decades prior to the '770 Patent.

630. Accordingly, *Tolman* discloses Limitation 14.1.

b. <u>14.2: "communicating fluid to a first well via a manifold and a first valve, the first valve being associated with both the manifold and the first well; and"</u>

<u>14.3: "in response to determining that the fluid communicated via the manifold has satisfied one or more conditions:"</u>

<u>14.4: "opening a second valve; communicating fluid to a second well via the second valve; and"</u>

<u>14.5: "closing the first valve after opening the second valve."</u>

631. Limitations 14.2-14.5 are identical to the limitations in Limitations 1.1-1.4, discussed above. Thus, Limitations 14.2-14.5 are disclosed by *Tolman* at least

for the same reasons as those discussed above regarding Limitations 1.1-1.4 in Sections XV.A.a-XV.A.d.

632. Because *Tolman* discloses each and every limitation of Claim 14, *Tolman* anticipates Claim 14, or in the alternative, renders obvious Claim 14 for the reasons discussed above.

O. DEPENDENT CLAIM 15

633. Dependent Claim 15 depends from Claim 14. In addition to the disclosure of the limitations of Claim 14 discussed above, *Tolman* discloses the additional limitations of Claim 15:

a. **15.1: "15. The apparatus of claim 14, wherein, when the instructions are executed by the one or more processors, the following steps are also executed: communicating fluid to a third well via the manifold and a third valve, the third valve being associated with both the manifold and the third well; and"**

634. With the exception of being an apparatus claim using the processor(s) of Independent Claim 14, Limitation 15.1 recites the same communicating step recited in Limitation 2.1 discussed above. As discussed above with Claim 14, *Tolman*'s processor-based devices can be used to control the operations in the multi-well systems, as taught by *Tolman*,[362] which would include steps as recited in Limitations 2.1 and 15.1. Thus, Limitation 15.1 is disclosed by *Tolman* at least for

[362] Ex. 1006 at 14:3-22.

the same reasons as those discussed above regarding Limitation 2.1 in Section XV.B.a.

b. <u>15.2: "in response to determining that the fluid communicated via the manifold has satisfied the one or more conditions:"</u>

c. <u>15.3: "opening a fourth valve;"</u>

d. <u>15.4: "communicating fluid to a fourth well via the fourth valve;"</u>

e. <u>15.5: "closing the third valve after opening the fourth valve."</u>

635. With the exception of being an apparatus claim and depending from Claim 14, Limitations 15.2-15.5 are identical Limitations 2.2-2.5 discussed above. Thus, Limitations 15.2-15.5 are disclosed by *Tolman* at least for the same reasons as those discussed above regarding Limitations 2.2-2.5 in Sections XV.B.b-XV.B.e.

636. Because *Tolman* discloses each and every limitation of Claim 15, *Tolman* anticipates Claim 15, or in the alternative, renders obvious Claim 15 for the reasons discussed above.

P. <u>DEPENDENT CLAIM 16</u>

637. Dependent Claim 16 depends from Claim 15, which depends from Claim 14. In addition to the disclosure of the limitations of Claims 14 and 15 discussed above, *Tolman* discloses the additional limitations of Claim 16:

a. **16.1: "16. The apparatus of claim 15, wherein: the first valve is closed after opening both the second valve and the fourth valve; and/or**

b. **16.2: "the third valve is closed after opening both the second valve and the fourth valve."**

638. With the exception of being an apparatus claim and depending from Claim 15, Limitations 16.1-16.2 are identical to Limitations 3.1-3.2 discussed above. Thus, Limitations 16.1-16.2 are disclosed by *Tolman* at least for the same reasons as those discussed above regarding Limitations 3.1-3.2 in Sections XV.C.a-XV.C.b.

639. Because *Tolman* discloses each and every limitation of Claim 16, *Tolman* anticipates Claim 16, or in the alternative, renders obvious Claim 16 for the reasons discussed above.

Q. DEPENDENT CLAIM 17

640. Dependent Claim 17 depends from Claim 14. In addition to the disclosure of the limitations of Claim 17 discussed above, *Tolman* discloses the additional limitations of Claim 14:

a. **17. The apparatus of claim 14, wherein the one or more conditions include one or more flow rate conditions.**

641. With the exception of being an apparatus claim and depending from Claim 14, the limitations of Claim 17 are identical to those of Claim 4 discussed above. Thus, the limitations of Claim 17 are disclosed by *Tolman* at least for the same reasons as those discussed above regarding Claim 4 in Section XV.D.

Accordingly, *Tolman* anticipates Claim 17, or in the alternative, renders obvious Claim 17 for the reasons discussed above.

R. DEPENDENT CLAIM 18

642. Dependent Claim 18 depends from Claim 17, which depends from Claim 1. In addition to the disclosure of the limitations of Claims 14 and 17 discussed above, *Tolman* discloses the additional limitations of Claim 18:

a. 18. The apparatus of claim 17, wherein the fluid communicated via the manifold has satisfied the one or more flow rate conditions when a flow rate of the fluid is below an upper threshold, above a lower threshold, or both.

643. With the exception of being an apparatus claim and depending from Claim 17, the limitations of Claim 18 are identical to those of Claim 5 discussed above. Thus, the limitations of Claim 18 are disclosed by *Tolman* at least for the same reasons as those discussed above regarding Claim 5 in Section XV.E. Accordingly, *Tolman* anticipates Claim 18, or in the alternative, renders obvious Claim 18 for the reasons discussed above.

S. DEPENDENT CLAIM 19

644. Dependent Claim 19 depends from Claim 17, which depends from Claim 14. In addition to the disclosure of the limitations of Claims 14 and 17 discussed above, *Tolman* discloses the additional limitations of Claim 19:

a. **19. The apparatus of claim 17, wherein the fluid communicated via the manifold has not satisfied the one or more flow rate conditions when a flow rate of the fluid is above an upper threshold or below a lower threshold.**

645. With the exception of being an apparatus claim and depending from Claim 17, the limitations of Claim 19 are identical to those of Claim 6 discussed above. Thus, the limitations of Claim 19 are disclosed by *Tolman* at least for the same reasons as those discussed above regarding Claim 6 in Section XV.F. Accordingly, *Tolman* anticipates Claim 19, or in the alternative, renders obvious Claim 19 for the reasons discussed above.

T. DEPENDENT CLAIM 20

646. Dependent Claim 20 depends from Claim 14. In addition to the disclosure of the limitations of Claim 14 discussed above, *Tolman* discloses the additional limitations of Claim 20:

a. **20. The apparatus of claim 14, wherein, when the instructions are executed by the one or more processors, the following step is also executed: pumping the fluid into the manifold.**

647. With the exception of being an apparatus claim using the processor(s) of Independent Claim 14, the limitations of Claim 20 are identical to those of Claim 7 discussed above. As discussed above with Claim 14, *Tolman*'s processor-based devices can be used to control the pumping operations in the multi-well systems, as

taught by *Tolman*.[363] Thus, the limitations of Claim 20 are disclosed by *Tolman* at least for the same reasons as those discussed above regarding Claim 7 in Section XV.G. Accordingly, *Tolman* anticipates Claim 20, or in the alternative, renders obvious Claim 20 for the reasons discussed above.

U. DEPENDENT CLAIM 21

648. Dependent Claim 21 depends from Claim 14. In addition to the disclosure of the limitations of Claim 14 discussed above, *Tolman* discloses the additional limitations of Claim 21:

> **a. 21. The apparatus of claim 14, wherein, when the instructions are executed by the one or more processors, the following step is also executed: determining that the fluid communicated via the manifold has satisfied the one or more conditions.**

649. With the exception of being an apparatus claim using the processor(s) of Independent Claim 14, the limitations of Claim 21 are identical to those of Claim 8 discussed above. As discussed above with Claim 14, *Tolman*'s processor-based devices can be used to communicate with system measurement devices and control the operations in the multi-well systems, as taught by *Tolman*,[364] which would include determining condition(s) of fluid communicated via a manifold. Thus, the limitations of Claim 21 are disclosed by *Tolman* at least for the same reasons as those

[363] Ex. 1006 at 14:3-22.

[364] Ex. 1006 at 14:3-22.

discussed above regarding Claim 8 in Section XV.H. Accordingly, *Tolman* anticipates Claim 21, or in the alternative, renders obvious Claim 21 for the reasons discussed above.

V. DEPENDENT CLAIM 22

650. Dependent Claim 22 depends from Claim 21, which depends from Claim 14. In addition to the disclosure of the limitations of Claims 14 and 21 discussed above, *Tolman* discloses the additional limitations of Claim 22:

a. **22. The apparatus of claim 21, wherein determining that the fluid communicated via the manifold has satisfied the one or more flow rate conditions comprises determining that a flow rate of the fluid is below an upper threshold, above a lower threshold, or both.**

651. With the exception of being an apparatus claim and depending from Claim 21, the limitations of Claim 22 are identical to those of Claim 9 discussed above. Thus, the limitations of Claim 22 are disclosed by *Tolman* at least for the same reasons as those discussed above regarding Claim 9 in Section XV.I. Accordingly, *Tolman* anticipates Claim 22, or in the alternative, renders obvious Claim 22 for the reasons discussed above.

W. DEPENDENT CLAIM 23

652. Dependent Claim 23 depends from Claim 14. In addition to the disclosure of the limitations of Claim 14 discussed above, *Tolman* discloses the additional limitations of Claim 23:

a. **23. The apparatus of claim 14, wherein the fluid communicated via the manifold is hydraulic fracturing fluid.**

653. With the exception of being an apparatus claim and depending from Claim 14, the limitations of Claim 23 are identical to those of Claim 10 discussed above. Thus, the limitations of Claim 23 are disclosed by *Tolman* at least for the same reasons as those discussed above regarding Claim 10 in Section XV.J. Accordingly, *Tolman* anticipates Claim 23, or in the alternative, renders obvious Claim 23 for the reasons discussed above.

X. DEPENDENT CLAIM 24

654. Dependent Claim 24 depends from Claim 14. In addition to the disclosure of the limitations of Claim 14 discussed above, *Tolman* discloses the additional limitations of Claim 24:

a. **24. The apparatus of claim 14, wherein: the first valve is a first zipper valve; and/or the second valve is a second zipper valve.**

655. With the exception of being an apparatus claim and depending from Claim 14, the limitations of Claim 24 are identical to those of Claim 11 discussed above. Thus, the limitations of Claim 24 are disclosed by *Tolman* at least for the same reasons as those discussed above regarding Claim 11 in Section XV.K. Accordingly, *Tolman* anticipates Claim 24, or in the alternative, renders obvious Claim 24 for the reasons discussed above.

Y. DEPENDENT CLAIM 25

656. Dependent Claim 25 depends from Claim 14. In addition to the disclosure of the limitations of Claim 14 discussed above, *Tolman* discloses the additional limitations of Claim 25:

a. 25.1: "25. The apparatus of claim 14, wherein the second valve is associated with both the manifold and the second well; and

25.2: "wherein communicating fluid to the second well via the second valve comprises communicating fluid to the second well via the manifold and the second valve."

657. With the exception of being an apparatus claim and depending from Claim 14, Limitations 25.1 and 25.2 are identical to those of 12.1 and 12.2 discussed above. Thus, Limitations 25.1-25.2 are disclosed by *Tolman* at least for the same reasons as those discussed above regarding 12.1-12.2 in Sections XV.L.a-XV.L.b.

658. Because *Tolman* discloses each and every limitation of Claim 25, *Tolman* anticipates Claim 25, or in the alternative, renders obvious Claim 25 for the reasons discussed above.

Z. DEPENDENT CLAIM 26

659. Dependent Claim 26 depends from Claim 25, which depends from Claim 14. In addition to the disclosure of the limitations of Claims 25 and 14 discussed above, *Tolman* discloses the additional limitations of Claim 26:

a. 26. The apparatus of claim 25, wherein the fluid communicated via the manifold is hydraulic fracturing fluid."

660. With the exception of being an apparatus claim and depending from Claim 25, which depends from Claim 14, the limitations of Claim 26 are identical to those of Claim 13 discussed above. Thus, the limitations of Claim 26 are disclosed by *Tolman* at least for the same reasons as those discussed above regarding Claim 13 in Section XV.M. Accordingly, *Tolman* anticipates Claim 26, or in the alternative, renders obvious Claim 26 for the reasons discussed above.

AA. INDEPENDENT CLAIM 27

661. It is my opinion that *Tolman* anticipates, or at least renders obvious, Claim 27 of the '770 Patent. Details regarding the specific disclosures of *Tolman* are contained in the subsections following. To the extent the Board determines that *Tolman* does not explicitly disclose the limitations of Claim 27, a POSITA would have found the system of Claim 27 to be obvious in light of the disclosure and teachings of *Tolman*.

a. 27.1: "1. A system, comprising: a first valve via which fluid is communicated from a manifold to a first well;"

662. With the exception of being rewritten as a system claim, Limitation 27.1 recites the same limitation as Limitation 1.1 and is disclosed by *Tolman* for the same reasons as those discussed above regarding Limitation 1.1 in Section XV.A.a.

663. Further, *Tolman* discloses the "manifold contains multiple valves to enable stimulation fluid to be pumped into any selected well."[365] Additionally, *Tolman* discloses "first manifold well valve **214**, second manifold well valve **216**, and a third manifold well valve **218** may be located near each of the trees"[366] and "manifold **206** may be coupled to any number of wells with the appropriate valves."[367] Thus, *Tolman* discloses a first valve via which fluid is communicated from a manifold to a first well.

664. Accordingly, *Tolman* discloses Limitations of 27.1.

b. <u>27.2: "a second valve via which fluid is adapted to be communicated to a second well; and"</u>

665. With the exception of being rewritten as a system claim, this limitation is substantially similar to 1.3 and is disclosed by *Tolman* for the same reasons as those discussed above regarding Limitation 1.3 in Section XV.A.c. Thus, *Tolman* discloses Limitation 27.2.

---

[365] Ex. 1006 at 4:8-11.

[366] Ex. 1006 at 6:58-60.

[367] Ex. 1006 at 8:50-52.

c. 27.3: "one or more controllers, configured to:

666. *Tolman* discloses this limitation. *Tolman* teaches the use of controller, in the form of a processor based device such as a computer system, to control the valves and pumps:[368]

> Further, in another alternative embodiment, it may be beneficial to have automated devices, such as processor based devices, which are utilized for the stimulation operations. For instance, the stimulation fluid pumping system **202** may be automated and controlled by a processor based device, such as a computer system. With the computer system, the stimulation treatment schedules for each individual stimulation treatment may be pre-programmed into the computer system. Also, the pumping system manifold **206** may include a processor based device, such as a computer system, as well. The computer system for the pumping system manifold **206** may include mechanisms to adjust the valves **210**, **214**, **216** and **218** between the open and closed positions, and communicate with the various gauges **220**, **222** and **226** and ball-sealer injector **224**. In fact, the computer systems of the stimulation fluid pumping system **202** and the pumping system manifold **206** may be configured to interact with each other to manage the pumping stimulation treatment process for the plurality of wells **104a-104c.**

667. This description of a controller matches the description in the '770 Patent which describes "the controller **156** is or includes a non-transitory computer readable medium and one or more processors adapted to execute instructions stored on the non-transitory computer readable medium."[369] A POSITA would have

[368] Ex. 1006 at 14:3-22.

[369] Ex. 1006 at 6:36-39.

immediately recognized the description of the '770 Patent as a generic computer system being used as a controller, as is disclosed by *Tolman*.

668. Accordingly, *Tolman* discloses Limitation 27.3.

d. <u>27.4: "open the second valve to thereby communicate fluid to the second well via the second valve; and"</u>

e. <u>27.5: "close the first valve after opening the second valve"</u>

669. Limitations 27.4 and 27.5 are identical to Limitations 1.3 and 1.4, respectively, and are disclosed by *Tolman* for the same reasons as those discussed above regarding Limitations 1.3-1.4 in Sections XV.A.c-XV.A.d. Accordingly, *Tolman* discloses Limitations 27.4-27.5.

f. <u>27.6: "in response to: determining that the fluid communicated via the manifold has satisfied one or more conditions."</u>

670. Limitation 27.6 is identical to Limitation 1.2 and is disclosed by *Tolman* for the same reasons as those discussed above regarding Limitation 1.2 in Section XV.A.b. Thus, *Tolman* discloses Limitation 27.6.

671. Because *Tolman* discloses each and every limitation of Claim 27, *Tolman* anticipates Claim 27, or in the alternative, renders obvious Claim 27 for the reasons discussed above.

BB. DEPENDENT CLAIM 28

672. Dependent Claim 28 depends from Claim 27. In addition to the disclosure of the limitations of Claim 27 discussed above, *Tolman* discloses the additional limitations of Claim 28:

a. 28.1: "28. The system of claim 27, further comprising: a third valve via which fluid is communicated from the manifold to a third well;"

673. With the exception of being part of a system claim and depending from Claim 27, the limitations of 28.1 are substantially similar to those of 2.1 discussed above. Thus, Limitation 28.1 is disclosed by *Tolman* at least for the same reasons as those discussed above regarding 2.1 in Section XV.B.a.

b. 28.2: "a fourth valve via which the fluid is adapted to be communicated to a fourth well; and"

674. Limitation 28.2 is substantially similar to Limitations 2.3-2.4 and is disclosed or rendered obvious by *Tolman* for the same reasons as those discussed above regarding Limitations 2.3-2.4 in Sections XV.B.c-XV.B.d.

c. 28.3: "the one or more controllers, configured to: open the fourth valve to thereby communicate fluid to the fourth well via the fourth valve; and"

675. With the exception of being part of a system claim and using the controller(s) of Independent Claim 27, Limitation 28.3 recites the same steps recited in Limitations 2.3-2.4 discussed above. As discussed above with Claim 27, *Tolman*'s

controllers can be used to control the operations in *Tolman*'s multi-well systems,[370] including opening valves to communicate fluid to an associated well. Accordingly, *Tolman* discloses, or at least renders obvious, controllers which are configured to open the fourth valve to communicate fluid to the fourth well. Thus, Limitation 28.3 is disclosed by *Tolman* at least for the same reasons as those discussed above regarding Limitations 2.3-2.4 in Sections XV.B.c-XV.B.d.

d. 28.4: "close the third valve after opening the fourth valve,"

676. Limitation 28.4 is identical to Limitation 2.5 and is disclosed or rendered obvious by *Tolman* for the same reasons as those discussed above regarding Limitation 2.5 in Section XV.B.e.

e. 28.5: "in response to: determining that the fluid communicated via the manifold has satisfied the one or more conditions."

677. Limitation 28.5 is identical to Limitation 2.2 and is disclosed or rendered obvious by *Tolman* for the same reasons as those discussed above regarding Limitation 2.2 in Section XV.B.b.

678. Because *Tolman* discloses each and every element of Claim 28, Claim 28 is anticipated by *Tolman*. To the extent that the Board finds Claim 28 is not anticipated by *Tolman*, Claim 28 is obvious over *Tolman* alone for the reasons discussed above.

---

[370] Ex. 1006 at 14:3-22.

CC. DEPENDENT CLAIM 29

679. Dependent Claim 29 depends from Claim 28, which depends from Claim 27. In addition to the disclosure of the limitations of Claims 28 and 27 discussed above, *Tolman* discloses the additional limitations of Claim 29:

a. 29.1: "29. The system of claim 28, wherein the one or more controllers are further configured to: close the first valve after opening both the second valve and the fourth valve; and/or

29.2: "close the third valve after opening both the second valve and the fourth valve."

680. With the exception of being part of a system claim and using the controller(s) of Independent Claim 27, Limitations 29.1 and 29.2 recites the same steps recited in Limitations 3.1 and 3.2 discussed above. As discussed above with Claim 27, *Tolman*'s controllers can be used to control the operations in *Tolman*'s multi-well systems,[371] including opening and closing valves to communicate fluid to and isolate associated wells. Accordingly, *Tolman* discloses, or at least renders obvious, controllers which are configured to perform the steps in Limitations 29.1 and 29.2, which are disclosed by *Tolman* at least for the same reasons as those discussed above regarding Limitations 3.1 and 3.2 in Section XV.C.

[371] Ex. 1006 at 14:3-22.

681. Because *Tolman* discloses each and every limitation of Claim 29, *Tolman* anticipates Claim 29, or in the alternative, renders obvious Claim 29 for the reasons discussed above.

DD. DEPENDENT CLAIM 30

682. Dependent Claim 30 depends from Claim 27. In addition to the disclosure of the limitations of Claim 27 discussed above, *Tolman* discloses the additional limitations of Claim 30:

a. 30. The system of claim 27, wherein the one or more conditions include one or more flow rate conditions.

683. With the exception of being rewritten as a system claim and depending from Claim 27, the limitations of Claim 30 are identical to those of Claim 4 discussed above. Thus, the limitations of Claim 30 are disclosed by *Tolman* at least for the same reasons as those discussed above regarding Claim 4 in Section XV.D. Accordingly, *Tolman* anticipates Claim 30, or in the alternative, renders obvious Claim 30 for the reasons discussed above.

EE. DEPENDENT CLAIM 31

684. Dependent Claim 31 depends from Claim 30, which depends from Claim 27. In addition to the disclosure of the limitations of Claims 30 and 27 discussed above, *Tolman* discloses the additional limitations of Claim 31:

a. **31. The system of claim 30, wherein the fluid communicated via the manifold has satisfied the one or more flow rate conditions when a flow rate of the fluid is below an upper threshold, above a lower threshold, or both.**

685. With the exception of being rewritten as a system claim and depending from Claims 30 and 27, the limitations of Claim 31 are identical to those of Claim 5 discussed above. Thus, the limitations of Claim 31 are disclosed by *Tolman* at least for the same reasons as those discussed above regarding Claim 5 in Section XV.E. Accordingly, *Tolman* anticipates Claim 31, or in the alternative, renders obvious Claim 31 for the reasons discussed above.

FF. DEPENDENT CLAIM 32

686. Dependent Claim 32 depends from Claim 30, which depends from Claim 27. In addition to the disclosure of the limitations of Claims 30 and 27 discussed above, *Tolman* discloses the additional limitations of Claim 32:

a. **32. The system of claim 30, wherein the fluid communicated via the manifold has not satisfied the one or more flow rate conditions when a flow rate of the fluid is above an upper threshold or below a lower threshold.**

687. With the exception of being rewritten as a system claim and depending from Claims 30 and 27, the limitations of Claim 32 are identical to those of Claim 6 discussed above. Thus, the limitations of Claim 32 are disclosed by *Tolman* at least for the same reasons as those discussed above regarding Claim 6 in Section XV.F.

Accordingly, *Tolman* anticipates Claim 32, or in the alternative, renders obvious Claim 32 for the reasons discussed above.

GG. DEPENDENT CLAIM 33

688. Dependent Claim 33 depends from Claim 27. In addition to the disclosure of the limitations of Claim 27 discussed above, *Tolman* discloses the additional limitations of Claim 33:

a. "33. The system of claim 27, further comprising the manifold."

689. *Tolman* discloses this limitation. Initially, a manifold is disclosed in Fig. 2 of *Tolman*. Fig. 2 of *Tolman* includes "a stimulation fluid pumping system **202** [annotated in red], a stimulation storage system **204**, a well coupling system, such as a pumping system manifold **206** [annotated in blue], and flowback manifolds **230a-230c**."[372]

[372] Ex. 1006 at 6:14-17.

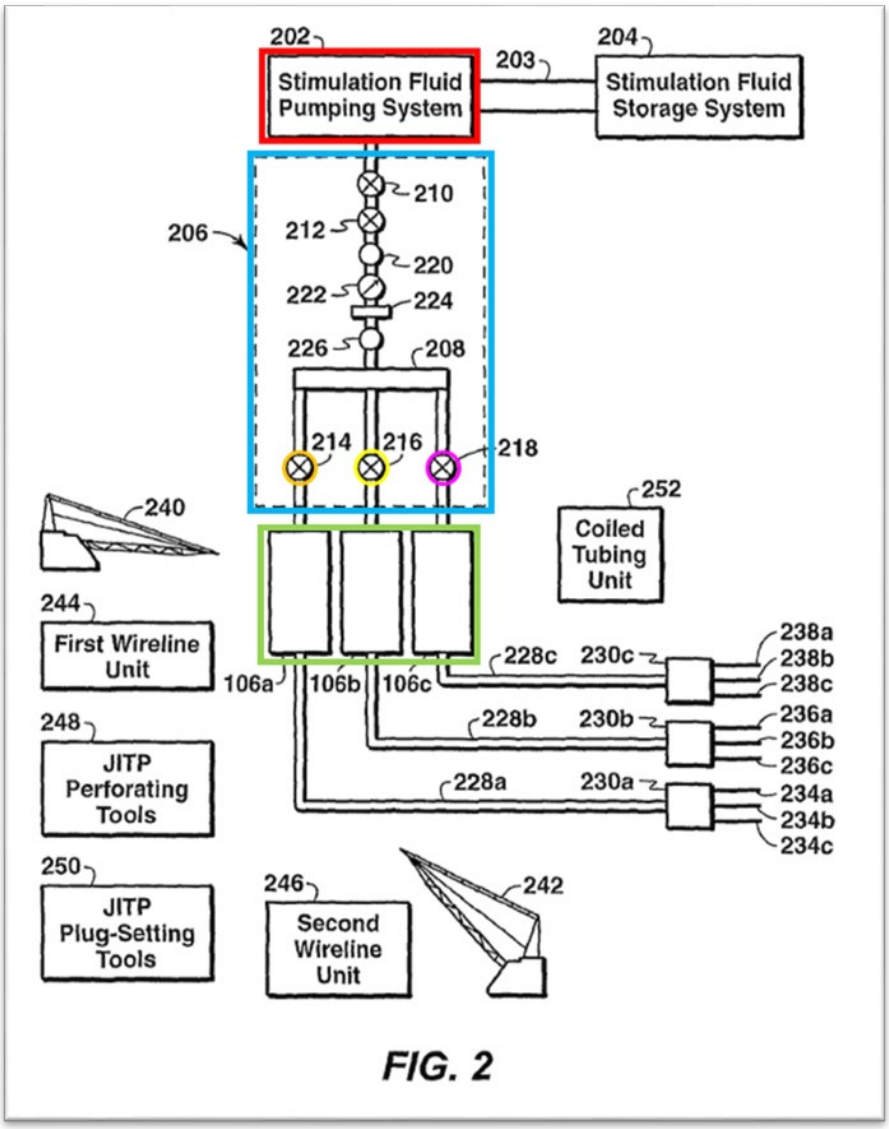

FIG. 2

690. Accordingly, *Tolman* discloses the limitations of Claim 33, and therefore *Tolman* anticipates Claim 33, or in the alternative, renders obvious Claim 33 for the reasons discussed above.

HH. DEPENDENT CLAIM 34

691. Dependent Claim 34 depends from Claim 27. In addition to the disclosure of the limitations of Claim 27 discussed above, *Tolman* discloses the additional limitations of Claim 34:

a. 34.1: "34. The system of claim 27, further comprising one or more pumps;"

692. *Tolman* discloses this limitation. As discussed regarding Claim 1, *Tolman* discloses, "[t]hrough the coupling of the valves **210, 212, 214, 216** and **218**, flow paths may be provided through the pumping system manifold **206**. Because the first manifold well valve **214**, second manifold well valve **216**, and a third manifold well valve **218** may be set to an open or closed position, stimulation fluid may be injected into one or more of the wells **104a-l 04c**, while the other wells **104a-104c** may be isolated by at least one of the valves **214-218** from the stimulation fluid pumping system **202**."[373]

693. Further, in Fig. 2, *Tolman* discloses a "Stimulation Fluid Pumping System" (annotated in red) which directs fluid into manifold **206**. (annotated in blue)

[373] Ex. 1006 at 7:20-27.

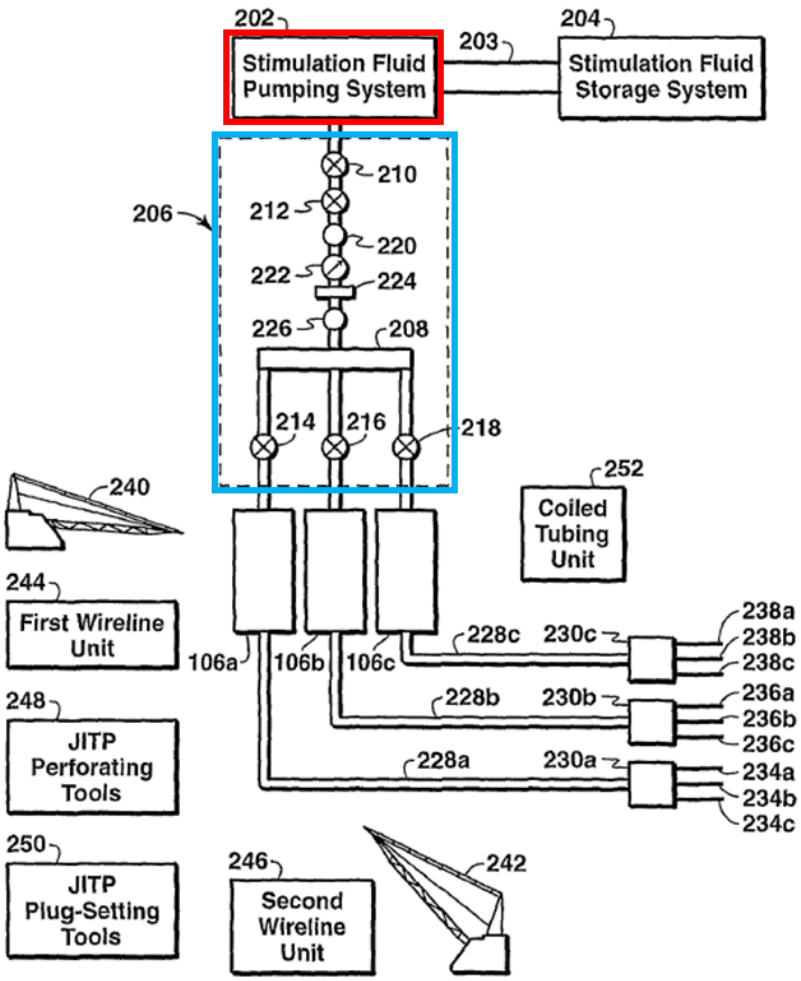

FIG. 2

694. Additionally, Fig. 3 of *Tolman* discloses the step of "Pump Stimulation Treatment into One of the Wells" (annotated in red) after the step of "Adjust Pumping System Manifold" (annotated in blue):

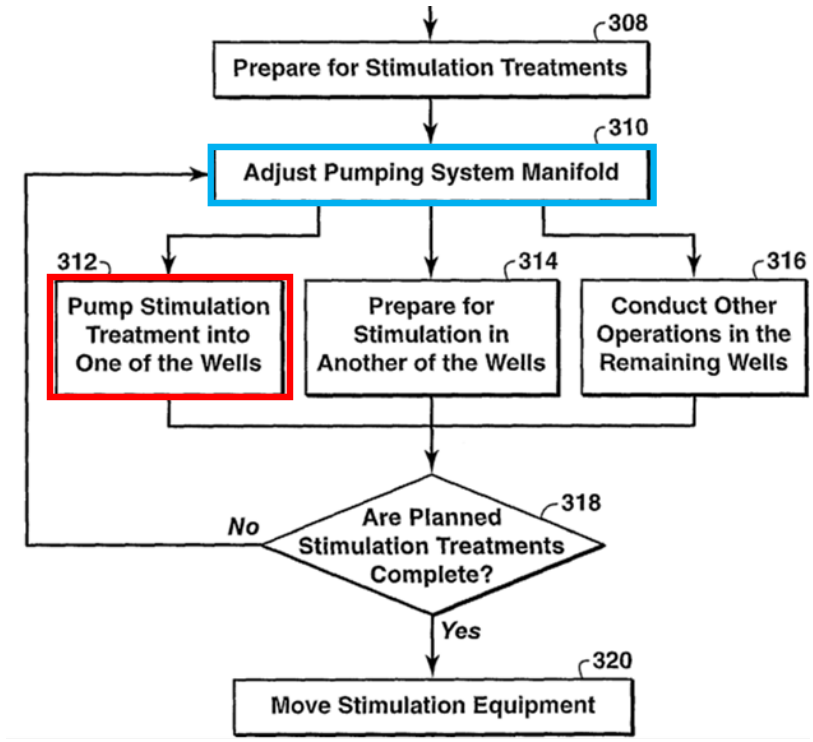

Annotated
FIG. 3

695. A POSITA would have immediately recognized that a "pumping system" and a step to "Pump Stimulation Treatment into One of the Wells" would require one or more pumps as claimed in 34.1. Accordingly, *Tolman* discloses one or more pumps as claimed by Limitation 34.1.

b. <u>34.2: "wherein the one or more controllers are further configured to cause the one or more pumps to pump the fluid into the manifold."</u>

696. As discussed above regarding 27.3, *Tolman* discloses "the stimulation fluid pumping system **202** may be automated and controlled by a processor based

device, such as a computer system."[374] Accordingly, *Tolman* discloses a controller controlling the pumps of the pumping system.

697. Further, *Tolman* teaches "[t]hrough the coupling of the valves **210, 212, 214, 216** and **218**, flow paths may be provided ***through the pumping system manifold*** **206**. Because the first manifold well valve **214**, second manifold well valve **216**, and a third manifold well valve **218** may be set to an open or closed position, ***stimulation fluid may be injected into one or more of the wells 104a-l 04c***, while the other wells **104a-104c** may be isolated by at least one of the valves **214-218** from the stimulation fluid pumping system **202**."[375]

[374] Ex. 1006 at 14:5-9.

[375] Ex. 1006 at 7:20-27.

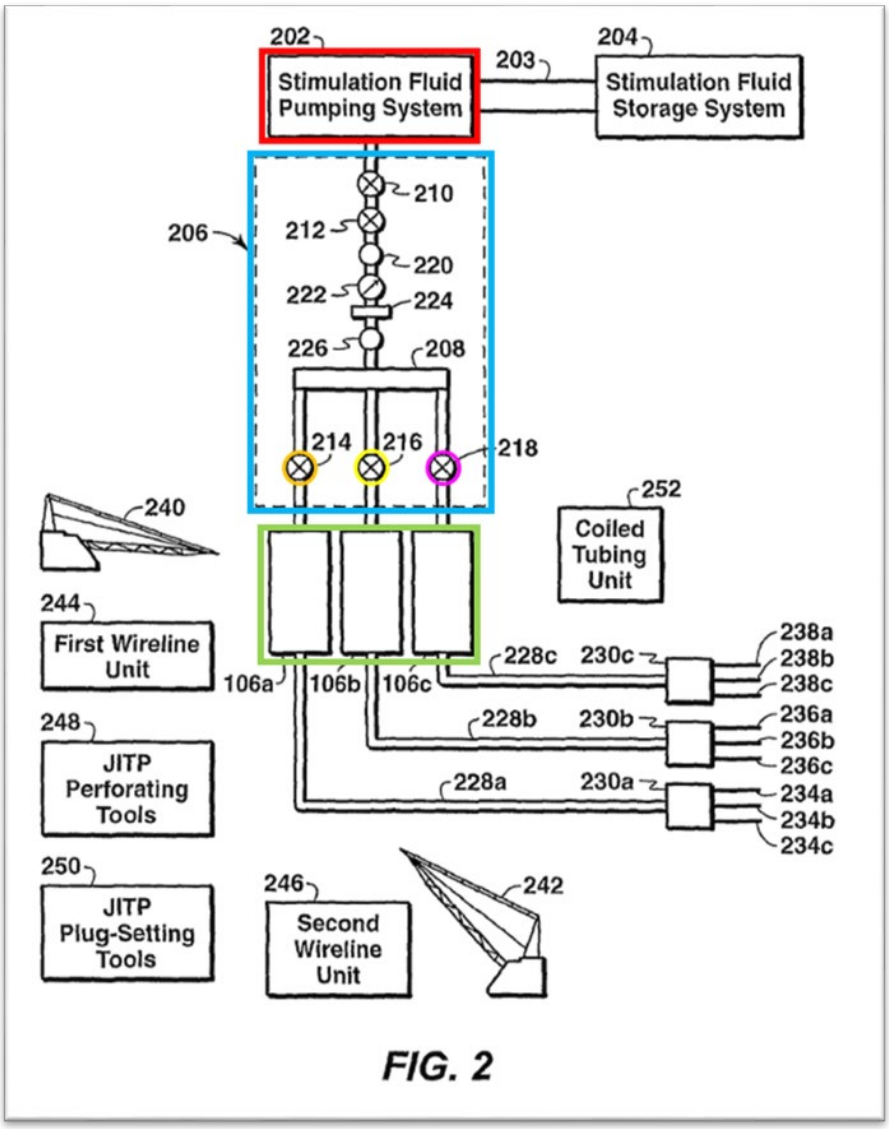

FIG. 2

698. Accordingly, *Tolman* teaches the controller causing pumps to pump fluid into the manifold, and then injecting the fluid into the well. Thus, *Tolman* discloses Limitation 34.2.

699. Because *Tolman* discloses each and every limitation of Claim 34, *Tolman* anticipates Claim 34, or in the alternative, renders obvious Claim 34 for the reasons discussed above.

II. DEPENDENT CLAIM 35

700. Dependent Claim 35 depends from Claim 27. In addition to the disclosure of the limitations of Claim 27 discussed above, *Tolman* discloses the additional limitations of Claim 35:

a. 35. The system of claim 27, wherein the fluid communicated via the manifold is hydraulic fracturing fluid.

701. With the exception of being rewritten as a system claim and depending from Claim 27, the limitations of Claim 35 are identical to those of Claim 10 discussed above. Thus, the limitations of Claim 35 are disclosed by *Tolman* at least for the same reasons as those discussed above regarding Claim 10 in Section XV.J. Accordingly, *Tolman* anticipates Claim 35, or in the alternative, renders obvious Claim 35 for the reasons discussed above.

JJ. DEPENDENT CLAIM 36

702. Dependent Claim 36 depends from Claim 27. In addition to the disclosure of the limitations of Claim 27 discussed above, *Tolman* discloses the additional limitations of Claim 36:

a. 36. The system of claim 27, wherein: the first valve is a first zipper valve; and/or the second valve is a second zipper valve.

703. With the exception of being rewritten as a system claim and depending from Claim 27, the limitations of Claim 36 are identical to those of Claim 11 discussed above. Thus, the limitations of Claim 36 are disclosed by *Carr* at least for

the same reasons as those discussed above regarding Claim 11 in Section XV.K. Accordingly, *Tolman* anticipates Claim 36, or in the alternative, renders obvious Claim 36 for the reasons discussed above.

KK. DEPENDENT CLAIM 37

704. Dependent Claim 37 depends from Claim 27. In addition to the disclosure of the limitations of Claim 27 discussed above, *Tolman* discloses the additional limitations of Claim 37:

a. **37.1: "The system of claim 27, wherein the second valve is associated with both the manifold and the second well; and**

37.2: "wherein communicating fluid to the second well via the second valve comprises communicating fluid to the second well via the manifold and the second valve."

705. With the exception of being rewritten as a system claim and depending from Claim 27, the limitations of Limitations 37.1-37.2 are identical to those of Limitations 12.1-12.2 discussed above. Thus, Limitations 37.1 and 37.2 are disclosed by *Tolman* at least for the same reasons as those discussed above regarding Limitations 12.1 and 12.2 in Sections XV.L.a-XV.L.b.

706. Because *Tolman* discloses each and every limitation of Claim 37, *Tolman* anticipates Claim 37, or in the alternative, renders obvious Claim 37 for the reasons discussed above.

LL. DEPENDENT CLAIM 38

707. Dependent Claim 38 depends from Claim 37, which depends from Claim 27. In addition to the disclosure of the limitations of Claims 37 and 27 discussed above, *Tolman* discloses the additional limitations of Claim 38:

a. "38. The system of claim 37, wherein the fluid communicated via the manifold is hydraulic fracturing fluid."

708. With the exception of being rewritten as a system claim and depending from Claims 37 and 27, the limitations of Claim 38 are identical to those of Claim 13 discussed above. Thus, the limitations of Claim 38 are disclosed by *Tolman* at least for the same reasons as those discussed above regarding Claim 13 in Section XV.M. Accordingly, *Tolman* anticipates Claim 38, or in the alternative, renders obvious Claim 38 for the reasons discussed above.

XVI. SECONDARY CONSIDERATIONS

709. I have not seen any evidence of secondary considerations related to the '770 Patent. Should the Patent Owner put forth any alleged evidence of secondary considerations in this proceeding or any related proceeding, I reserve the right to consider such evidence, to consider whether any such evidence has a nexus to any claims of the Challenged Patent, and to update my analysis.

XVII. CONCLUSION

710. Based on my education, experience, and expertise, it is my opinion that all of the Challenged Claims are anticipated and/or obvious in view of *Krupa*, *Carr*, *Beuterbaugh*, *Tolman*, and/or *Jackson* for the reasons discussed above.

All statements made herein of my own knowledge are true, and all statements made on information and belief are believed to be true. I further understand that willful false statements and the like are punishable by fine or imprisonment, or both under Section 1001 of Title 18 of the United States Code. I declare under penalty of perjury that the foregoing is true and correct.

Executed on December 15, 2023. _____

Dr. Robert A. Durham

APPENDIX A

Dr. ROBERT A DURHAM, PhD, FIEEE

Resume
Specialization
Honors & Awards
Publications

Dr ROBERT A DURHAM, PhD, FIEEE

Robert A Durham is the Principal of D^2 Tech Solutions, a technology related firm concentrating on Mechanical and Electrical systems and energy conversions. He also serves as a Principal Scientist of THEWAY LABs, Tulsa, OK, an engineering and energy consulting firm that provides design and failure analysis of facilities and system installations.

Dr. Durham's work experience is broad and encompasses all areas of the energy industry. Dr. Durham spent 11 years with AEP/CSW, at the time the country's largest utility, in electrical engineering positions in the power generation and transmission planning departments. He then accepted a position as Manager of Electric Infrastructure for New Dominion, LLC., a major independent energy producer in Oklahoma. Dr. Durham then moved on to hold the position of Vice President of Engineering and Project Management for EDG Power Group, an Engineering Procurement and Construction company specializing in design and construction of small to medium size power generating facilities. Dr. Durham left EDG Power Group to accept his current positions. Dr. Durham has been accepted as an expert and offered testimony in several jurisdictions.

Dr. Durham's extensive client list includes the development of a broad spectrum of forensic, electrical and facilities projects for many companies. He has also taught University offered courses in electrical engineering review for board licensure. He has published five books, six magazine articles and over 40 other technical papers and articles. Dr. Durham's extensive work on standards and electrical systems has resulted in his elevation to Fellow of the IEEE, the highest grade of recognition in the electrical technology industry.

Dr. Durham received the B.S. in electrical engineering from the University of Tulsa in 1992 and the M.E. in Technology Management from The University of Tulsa in 1997. Tulsa, OK. In 2004, Dr. Durham received a PhD in Engineering Management from Kennedy Western University.

Degrees Earned

BSEE, with Honors, The University of Tulsa
Master of Engineering, The University of Tulsa
PhD , Kennedy Western University

Area of Specialization

lightning & grounding
failure analysis & forensic engineering
electrical power systems & safety
power generation
utility industry competition
economics & management
petroleum & chemical industry
electrical / mechanical energy conversion

Registration

Professional Engineer - Oklahoma
Professional Engineer – Texas
Professional Engineer – California
Professional Engineer – New Hampshire (Inactive)
Professional Engineer – Kansas
Professional Engineer – North Carolina (Inactive)
Professional Engineer – Missouri
Professional Engineer – Arkansas
Professional Engineer – Virginia (Inactive)
Professional Engineer – Illinois (Inactive)
Electrical Contractor - Oklahoma

Work History

D^2 Tech Solutions, Inc. 2002 - 2022
Principal

THEWAY Corp. 2004 - 2022
Principal Scientist

EDG Power Group, Inc. 2002 - 2004
Vice President Engineering & Project Management

New Dominion, LLC Mgr Electric Infrastructure	2000 - 2002
Central & Southwest, Inc Electrical Engineer	1989 - 2000

Professional Memberships

Fellow	Institute of Electrical and Electronic Engineers
Diplomate	American College of Forensic Examiners, International
Member	National Association of Fire Investigators
Voting Member	National Fire Protection Institute, Electrical Section
Executive Member	Petroleum and Chemical Industry Committee, IEEE
Diplomate, Past Board Member	American Board of Forensic Engineering and Technology
Member	IEEE Standards Association
Past Chair	Production Subcommittee, IEEE IAS/PCIC
CFC	American College of Forensic Examiners
Member	International Association of Arson Investigators
CFEI, CVFEI	National Association of Fire Investigators
Past Chair	Tulsa Section IEEE
Chair	IEEE RP1017.1 Working Group
Chair	IEEE RP1017.2 Working Group
Chair	IEEE RP1017.3 Working Group
Chair	IEEE RP1017.4 Working Group
Past Chair	IEEE PCIC Standards Subcommittee
Secretary	IEEE Petroleum and Chemical Industry Committee

Honors and Awards

Fellow of the IEEE

For contributions to submersible electrical equipment analysis and multi-point ground method in hazardous petroleum and chemical environments.

Honor Societies

Tau Beta Pi, national engineering honors
Eta Kappa Nu, national electrical engineering honors

Dr. Durham's publications have often successfully competed for outstanding paper awards from journals of the Institute of Electrical and Electronic Engineers (PCIC and IAS). This is an

international competitive peer review and evaluation of papers that provide a significant contribution to the advancement and understanding of electrical applications.

IEEE Industry Applications Society, New Orleans, LA: Prize Article for "Data Quality and Grounding: Considerations in a Mixed Use Facility"

PCIC, Cincinnati, OK: Prize Paper for "Grounding and Bonding Conductors: Solid, Stranded, Bare or Insulated"

PCIC, New Orleans, LA: Prize paper for "Industrial Design Application for Power Distribution over Extra-Long Distances"

PCIC, Philadelphia, PA: Prize paper for "Paradigm Shifts and Impact on Engineers and Industry"

Transactions on Industry Applications, Orlando, FL: Prize Paper for "Lightning, Grounding, and Protection for Control Systems".

PCIC, Denver, CO: Prize Paper for "Grounding System Design for Isolated Locations and Plant Systems"

PCIC, St. Louis, MO: First place for "Lightning, Grounding, and Protection for Distributed Control and Communications Systems: A Retrofit".

Publications

Electrical Engineering in a Nutshell, Dr. Robert A Durham, Dr. Marcus O. Durham, ISBN 978-1466236795, 2011

Electrical Failure Analysis for Fire and Incident Investigations, Marcus O. Durham, Robert A. Durham, Rosemary Durham, Jason Coffin, ISBN 978-1463773472, 2011

Leadership and Success in Relationships and Communication, Marcus O. Durham and Robert A Durham, ISBN 978-1463758769, 2011

Leadership and Success in Organizations, Culture & Ethics: Group or Horizontal Interactions, Marcus O. Durham and Robert A Durham, ISBN 978-1466250338, 2011

Leadership and Success in Economics, Law & Technology: Society or External Influence, Marcus O. Durham and Robert A Durham, OK,ISBN 978-1466250461, 2011

How Should Generating Asset Acquisitions by Regulated, Vertically Integrated Utilities be Overseen in Today's Quasi-Regulated Electric Utility Environment? A Dissertation Presented to the Faculty of the School of Engineering Kennedy-Western University, KWU Press, Thousand Oaks, CA, 2004

R. A. Durham, M. O. Durham and T. W. Gillaspie, "Lightning Protection at Petrochemical Facilities - Part 3 Alternative Systems," *2022 IEEE Petroleum and Chemical Industry Committee Conference (PCIC)*, Denver, CO 2021.

R. A. Durham, M. O. Durham and T. W. Gillaspie, "Lightning Protection at Petrochemical Facilities - Part 2 Standards Requirements," *2021 IEEE Petroleum and Chemical Industry Committee Conference (PCIC)*, San Antonio, TX, 2021.

R. A. Durham, M. O. Durham and T. W. Gillaspie, "Petrochemical Facility Lightning Protection Primer: Part 1: History and Basic Science," in IEEE Industry Applications Magazine, vol. 27, no. 2, pp. 47-56, March-April 2021, doi: 10.1109/MIAS.2020.3024492.

R. A. Durham, S. J. Szczecinski and M. O. Durham, "Factors Impacting Selection of Grounding and Bonding Conductors," in *IEEE Transactions on Industry Applications*, vol. 56, no. 5, pp. 4652-4661, Sept.-Oct. 2020, doi: 10.1109/TIA.2020.3005637.

R. A. Durham, M. O. Durham and T. W. Gillaspie, "Lightning Protection at Petrochemical Facilities - Part 1 History and Background Science," *2019 IEEE Petroleum and Chemical Industry Committee Conference (PCIC)*, Vancouver, BC, Canada, 2019, pp. 205-214, doi: 10.1109/PCIC30934.2019.9074531.

R. A. Durham, S. J. Szczecinski and M. O. Durham, "Grounding and Bonding Conductors: Solid, Stranded, Bare or Insulated?: Copyright Material IEEE, Paper No. PCIC-2018-03," *2018 IEEE Petroleum and Chemical Industry Technical Conference (PCIC)*, Cincinnati, OH, USA, 2018, pp. 19-28, doi: 10.1109/PCIC31437.2018.9080442.

F. P. Feletto, R. Durham, E. Bortoni and J. Costa, "IMPROVENT OF MV CASCADED H BRIDGE INVERTER (CHBI) VFD AVAILABILITY FOR HIGH POWER ESP OIL WELLS," in *IEEE Transactions on Industry Applications*.
doi: 10.1109/TIA.2018.2866481
URL: http://ieeexplore.ieee.org/stamp/stamp.jsp?tp=&arnumber=8443149&isnumber=4957013

F. Feletto, R. A. Durham, E. da Costa Bortoni and J. G. C. Costa, "Techniques to improve MV cascaded H bridge inverter (CHBI) VFDs availability applied to drive high power esp oil wells," *2017 Petroleum and Chemical Industry Technical Conference (PCIC)*, Calgary, AB, Canada, 2017, pp. 363-370.
doi: 10.1109/PCICON.2017.8188756
URL: http://ieeexplore.ieee.org/stamp/stamp.jsp?tp=&arnumber=8188756&isnumber=8188605

R. A. Durham, M. Azambuja, F. P. Feleto and M. O. Durham, "PD testing of motors for hostile environments," *2015 IEEE Petroleum and Chemical Industry Committee Conference (PCIC)*, Houston, TX, 2015, pp. 1-8.
doi: 10.1109/PCICON.2015.7435106
URL: http://ieeexplore.ieee.org/stamp/stamp.jsp?tp=&arnumber=7435106&isnumber=7435079

Durham, Robert A.; Brinner, Thomas R., "Oilfield electric power distribution," Petroleum and Chemical Industry Technical Conference (PCIC), 2014 IEEE , vol., no., pp.429,442, 8-10 Sept. 2014 doi: 10.1109/PCICon.2014.6961908
URL: http://ieeexplore.ieee.org/stamp/stamp.jsp?tp=&arnumber=6961908&isnumber=6961868

Durham, Robert; Durham, M.O. "What Does Grounding Have To Do with Fire & Injury", Fire Protection vol 40 no 2, Fire Protection Association of Southern Africa, June 2014.

Durham, M.O.; Durham, R.A., "Does a Unified Energy Equation Contain the Higgs Field?," Access, IEEE , vol.1, no., pp.505,508, 2013
doi: 10.1109/ACCESS.2013.2276623
URL: http://ieeexplore.ieee.org/stamp/stamp.jsp?tp=&arnumber=6574202&isnumber=6336544

Durham, R.A.; Durham, M.O.; , "Does Corrugated Tubing + Lightning = Catastrophic Failure?," *Industry Applications, IEEE Transactions on* , vol.48, no.4, pp.1243-1250, July-Aug. 2012
doi: 10.1109/TIA.2012.2200069
URL: http://ieeexplore.ieee.org/stamp/stamp.jsp?tp=&arnumber=6202685&isnumber=6238414

Durham, R.A.; Durham, M.O.; , "Lightning, grounding, and protection for control and communications systems: Re-evaluated," *Petroleum and Chemical Industry Conference Europe Conference Proceedings (PCIC EUROPE), 2011* , vol., no., pp.1-11, 7-9 June 2011
URL: http://ieeexplore.ieee.org/stamp/stamp.jsp?tp=&arnumber=5936962&isnumber=5936950

Durham, M.O.; Durham, R.A.; , "Lightning dangers on corrugated tubing carrying hydrocarbons," *Petroleum and Chemical Industry Conference (PCIC), 2010 Record of Conference Papers Industry Applications Society 57th Annual* , vol., no., pp.1-9, 20-22 Sept. 2010 doi: 10.1109/PCIC.2010.5666860
URL: http://ieeexplore.ieee.org/stamp/stamp.jsp?tp=&arnumber=5666860&isnumber=5666816

Brinner, T. R.; Durham, R. A.; , "Transient-Voltage Aspects of Grounding," *Industry Applications, IEEE Transactions on* , vol.46, no.5, pp.1796-1804, Sept.-Oct. 2010
doi: 10.1109/TIA.2010.2059551
URL: http://ieeexplore.ieee.org/stamp/stamp.jsp?tp=&arnumber=5523987&isnumber=5577442

"CSST Response to Lightning and Transients – A Technical Analysis", Marcus O Durham and Robert A Durham, *Fire & Arson Investigator*, July 2009 Vol 60, No 1.

Brinner, T.R.; Durham, R.A.; , "Transient voltage aspects of grounding," *Petroleum and Chemical Industry Technical Conference, 2008. PCIC 2008. 55th IEEE* , vol., no., pp.1-9, 22-24

Sept. 2008
doi: 10.1109/PCICON.2008.4663969
URL: http://ieeexplore.ieee.org/stamp/stamp.jsp?tp=&arnumber=4663969&isnumber=4663961

Durham, M.O.; Durham, R.A.; Hulett, R.H.; , "History and Development of IEEE Standards for Downhole Cable," *Industry Applications, IEEE Transactions on* , vol.43, no.2, pp.436-443, March-april 2007
doi: 10.1109/TIA.2006.890022
URL: http://ieeexplore.ieee.org/stamp/stamp.jsp?tp=&arnumber=4132867&isnumber=4132857

Durham, R.A.; Durham, M.O.; , "What to do when Things go Wrong an Ethical Solution," *Petroleum and Chemical Industry Technical Conference, 2007. PCIC '07. IEEE* , vol., no., pp.1-7, 17-19 Sept. 2007
doi: 10.1109/PCICON.2007.4365790
URL: http://ieeexplore.ieee.org/stamp/stamp.jsp?tp=&arnumber=4365790&isnumber=4365767

Durham, M.O.; Durham, R.A.; , "Data quality and grounding," *Industry Applications Magazine, IEEE* , vol.12, no.3, pp. 67- 73, May-June 2006
doi: 10.1109/MIA.2006.1628848
URL: http://ieeexplore.ieee.org/stamp/stamp.jsp?tp=&arnumber=1628848&isnumber=34165

Durham, M.O.; Durham, R.A.; Hulett, R.; , "Submersible cable standards history newly revised," *Petroleum and Chemical Industry Conference, 2005. Industry Applications Society 52nd Annual* , vol., no., pp. 189- 197, 12-14 Sept. 2005
doi: 10.1109/PCICON.2005.1524554
URL: http://ieeexplore.ieee.org/stamp/stamp.jsp?tp=&arnumber=1524554&isnumber=32590

Durham, M.O.; Durham, R.A.; , "Cathodic Protection: Consequences and Standards From Using CP Systems to Prevent Corrosion"
Industry Applications Magazine, IEEE , vol.11, no.1, pp. 41- 47, Jan-Feb 2005
doi: 10.1109/MIA.2005.1380326
URL: http://ieeexplore.ieee.org/stamp/stamp.jsp?tp=&arnumber=1380326&isnumber=30100

Durham, M.O.; Durham, R.A.; , "Data quality and grounding considerations in a mixed-use facility," *Petroleum and Chemical Industry Technical Conference, 2004. Fifty-First Annual Conference 2004* , vol., no., pp. 1- 7, 13-15 Sept. 2004
doi: 10.1109/PCICON.2004.1352768
URL: http://ieeexplore.ieee.org/stamp/stamp.jsp?tp=&arnumber=1352768&isnumber=29719

Durham, R.A.; Durham, M.O.; , "Covering all the bases - industrial power system design in a utility environment," *Industry Applications Magazine, IEEE* , vol.9, no.6, pp. 14- 20, Nov.-Dec. 2003
doi: 10.1109/MIA.2003.1245791
URL: http://ieeexplore.ieee.org/stamp/stamp.jsp?tp=&arnumber=1245791&isnumber=27919

Durham, R.A.; Durham, M.O.; , "Corrosion impact of cathodic protection on surrounding structures," *Petroleum and Chemical Industry Conference, 2003. Record of Conference Papers. IEEE Industry Applications Society 50th Annual* , vol., no., pp. 303- 309, 15-17 Sept. 2003
doi: 10.1109/PCICON.2003.1242626
URL: http://ieeexplore.ieee.org/stamp/stamp.jsp?tp=&arnumber=1242626&isnumber=27844

Durham, M.O.; Durham, K.D.; Durham, R.A.; , "TVSS designs," *Industry Applications Magazine, IEEE* , vol.8, no.5, pp. 31- 36, Sep/Oct 2002
doi: 10.1109/MIA.2002.1028388
URL: http://ieeexplore.ieee.org/stamp/stamp.jsp?tp=&arnumber=1028388&isnumber=22082

Durham, M.O.; Durham, R.A.; Durham, K.D.; , "Applications engineering approach to Maxwell and other mathematically intense problems," *Petroleum and Chemical Industry Conference, 2002. Industry Applications Society 49th Annual* , vol., no., pp. 31- 38, 2002
doi: 10.1109/PCICON.2002.1044982
URL: http://ieeexplore.ieee.org/stamp/stamp.jsp?tp=&arnumber=1044982&isnumber=22397

Durham, M.O.; Durham, R.A.; , "Ground systems design considerations for vessels [in petroleum industry]," *Industry Applications Magazine, IEEE* , vol.7, no.6, pp.41-49, Nov/Dec 2001
doi: 10.1109/2943.959115
URL: http://ieeexplore.ieee.org/stamp/stamp.jsp?tp=&arnumber=959115&isnumber=20727

Durham, R.A.; Durham, M.O.; , "Industrial design application for power distribution over extra-long distances," *Petroleum and Chemical Industry Conference, 2001. IEEE Industry Applications Society 48th Annual* , vol., no., pp.217-224, 2001
doi: 10.1109/PCICON.2001.960556
URL: http://ieeexplore.ieee.org/stamp/stamp.jsp?tp=&arnumber=960556&isnumber=20752

Durham, M.O.; Durham, R.A.; Durham, K.D.; , "2," *Petroleum and Chemical Industry Conference, 2000. Record of Conference Papers. Industry Applications Society 47th Annual* , vol., no., pp.207-215, 2000
doi: 10.1109/PCICON.2000.882777
URL: http://ieeexplore.ieee.org/stamp/stamp.jsp?tp=&arnumber=882777&isnumber=19100

Durham, R.A.; Durham, M.O.; , "Electric re-regulation impact," *Industry Applications Magazine, IEEE* , vol.5, no.5, pp.47-56, Sep/Oct 1999
doi: 10.1109/2943.783122
URL: http://ieeexplore.ieee.org/stamp/stamp.jsp?tp=&arnumber=783122&isnumber=16987

Durham, M.O.; Durham, R.A.; , "Interaction and design of grounded systems for tanks and vessels ," *Petroleum and Chemical Industry Conference, 1999. Industry Applications Society 46th Annual* , vol., no., pp.195-202, 1999
doi: 10.1109/PCICON.1999.806437
URL: http://ieeexplore.ieee.org/stamp/stamp.jsp?tp=&arnumber=806437&isnumber=17478

Durham, M.O.; Durham, R.A.; Anderson, D.; , "What are standardized equations for acceptance of hi-pot tests and for voltage drop?," *Petroleum and Chemical Industry Conference, 1998. Industry Applications Society 45th Annual* , vol., no., pp.281-287, 28-30 Sep 1998
doi: 10.1109/PCICON.1998.727989
URL: http://ieeexplore.ieee.org/stamp/stamp.jsp?tp=&arnumber=727989&isnumber=15690

Durham, M.O.; Durham, R.A.; , "Changing paradigms for engineering," *Industry Applications Magazine, IEEE* , vol.4, no.2, pp.52-60, Mar/Apr 1998
doi: 10.1109/2943.655661
URL: http://ieeexplore.ieee.org/stamp/stamp.jsp?tp=&arnumber=655661&isnumber=14297

Durham, R.A.; Durham, M.O.; , "Electric re-regulation and effects on industrial customers," *Petroleum and Chemical Industry Conference, 1997. Record of Conference Papers. The Institute of Electrical and Electronics Engineers Incorporated Industry Applications Society 44th Annual* , vol., no., pp.69-78, 15-17 Sep 1997
doi: 10.1109/PCICON.1997.648168
URL: http://ieeexplore.ieee.org/stamp/stamp.jsp?tp=&arnumber=648168&isnumber=14127

Durham, M.O.; Durham, R.A.; , "Grounding system design for isolated locations and plant systems ," *Industry Applications, IEEE Transactions on* , vol.33, no.2, pp.374-382, Mar/Apr 1997
doi: 10.1109/28.567998
URL: http://ieeexplore.ieee.org/stamp/stamp.jsp?tp=&arnumber=567998&isnumber=12339

Durham, M.O.; Durham, R.A.; , "Paradigm shifts and impact on industry and technology [R&D management]," *Petroleum and Chemical Industry Conference, 1996, Record of Conference Papers. The Institute of Electrical and Electronics Engineers Incorporated Industry Applications Society 43rd Annual* , vol., no., pp.27-35, 23-25 Sep 1996
doi: 10.1109/PCICON.1996.564859
URL: http://ieeexplore.ieee.org/stamp/stamp.jsp?tp=&arnumber=564859&isnumber=12267

Durham, M.O.; Durham, R.A.; , "Grounding system design for isolated locations and plant systems ," *Petroleum and Chemical Industry Conference, 1995. Record of Conference Papers., Industry Applications Society 42nd Annual* , vol., no., pp.145-153, 11-13 Sep 1995
doi: 10.1109/PCICON.1995.523949
URL: http://ieeexplore.ieee.org/stamp/stamp.jsp?tp=&arnumber=523949&isnumber=11530

Durham, M.O.; Durham, R.A.; , "Lightning, grounding and protection for control systems," *Industry Applications, IEEE Transactions on* , vol.31, no.1, pp.45-54, Jan/Feb 1995
doi: 10.1109/28.363051
URL: http://ieeexplore.ieee.org/stamp/stamp.jsp?tp=&arnumber=363051&isnumber=8319.

Durham, M.O.; Durham, R.A.; , "Lighting, grounding, and protection for distributed control and communications systems: a retrofit," *Petroleum and Chemical Industry Conference, 1993, Record of Conference Papers. The Institute of Electrical and Electronics Engineers*

Incorporated. Industry Applications Society 40th Annual , vol., no., pp.293-302, 13-15 Sep 1993
doi: 10.1109/PCICON.1993.337392
URL: http://ieeexplore.ieee.org/stamp/stamp.jsp?tp=&arnumber=337392&isnumber=7922

"Generalized Electrical Failures", Durham, R.A., Durham, M.O., Coffin, J.A. *Proceedings of 46th Annual Frontiers in Power Conference*, OSU, Stillwater, OK, October 2013.

"Common Ways your Electrical Installation does you Harm", Durham, R.A., Durham, M.O., Coffin, J.A. *Proceedings of 44th Annual Frontiers in Power Conference*, OSU, Stillwater, OK, October 2011.

"Ignition or Shock, is Grounding the Culprit?", Marcus O Durham, Robert A Durham, Rosemary Durham, Jason A. Coffin, *Proceedings of 43rd Annual Frontiers in Power Conference*, OSU, Stillwater, OK, October 2010.

"Unraveling the Myths of Low Energy Ignition", Marcus O Durham, Robert A Durham, Curtis L. Ozment, Jason A. Coffin, *Proceedings of 42nd Annual Frontiers in Power Conference*, OSU, Stillwater, OK, October 2009.

"Lightning, Transient & High Frequency Impact on Material Such As Corrugated Tubing", Marcus O. Durham & Robert Durham, Proceedings of 41st Annual Frontiers in Power Conference, OSU, Stillwater, OK, October 2008.

"Lightning Damage an Act of God, or Act of Negligence?", Marcus O. Durham, Robert Durham, Randall Overton, Curtis Ozment, Proceedings of 40th Annual Frontiers in Power Conference, OSU, Stillwater, OK, October 2007.

"The Flat Earth Society Perception of Grounding", Marcus O. Durham & Robert Durham, Proceedings of 39th Annual Frontiers in Power Conference, OSU, Stillwater, OK, October 2006.

"The IEEE Standards Process, A Case Study", Marcus O. Durham & Robert Durham, *Proceedings of 38th Annual Frontiers in Power Conference*, OSU, Stillwater, OK, October 2005.

"Engineering Management: A Course For Survival", Marcus O. Durham, Robert A. Durham, & Rosemary Durham, *American Society of Engineering Educators*, Pittsburg, KS 2004.

"Eleven Ground Systems and Connections", Marcus O. Durham & Robert Durham, *Proceedings of 37th Annual Frontiers in Power Conference*, OSU, Stillwater, OK, October 2004.

"Engineering Management, An Oxymoron?", Marcus O. Durham, Robert Durham & Rosemary Durham, *Proceedings of 37th Annual Frontiers in Power Conference*, OSU, Stillwater, OK, October 2004.

"Corrosion and Electrical Safety", Marcus O. Durham & Robert Durham, *Proceedings of 36th Annual Frontiers in Power Conference*, OSU, Stillwater, OK, October 2003.

"Applications Engineers Don't Do Hairy Math", Marcus O. Durham, Robert A. Durham, and Karen D. Durham, *Proceedings of 35th Annual Frontiers in Power Conference*, OSU, Stillwater, OK, October 2002.

"Tests and Correlations for TVSS", Marcus O. Durham, Karen Durham, and Robert Durham, *Proceedings of 34th Annual Frontiers in Power Conference*, OSU, Stillwater, OK, October 2001.

"Grounding Systems Interaction," Robert A. Durham and Marcus O. Durham, *Proceedings of 33rd Annual Frontiers in Power Conference*, OSU, Stillwater, OK, October 2000.

"A Cost Effective, Numeric Technique for Projecting Quality of Insulation and Impending Failures," Marcus O. Durham and Robert A. Durham, *Proceedings of 33rd Annual Frontiers in Power Conference*, OSU, Stillwater, OK, October 2000.

"An Engineering Selection for Size of Long Conductors Considering Factors in Addition to NEC," Marcus O. Durham and Robert A. Durham, *Proceedings of 33rd Annual Frontiers in Power Conference*, OSU, Stillwater, OK, October 2000.

"Grounding Systems Interaction," Robert A. Durham and Marcus O. Durham, *Proceedings of 32nd Annual Frontiers in Power Conference*, OSU, Stillwater, OK, October 1999.

"Can Electrical Insulation and Conductor Performance Be Predicted?" Marcus O. Durham and Robert A. Durham, *Proceedings of Production Operations Symposium*, SPE 52161, Oklahoma City, OK, March 1999

"Engineering Paradigms: Change, Opportunity and Benefit," Robert A. Durham and Marcus O. Durham, *Proceedings of 31st Annual Frontiers in Power Conference*, OSU, Stillwater, OK, October 1998.

"Electric Re-regulation and Impact on Users," Robert A. Durham and Marcus O. Durham, *Proceedings of 30th Annual Frontiers in Power Conference*, OSU, Stillwater, OK, October 1997.

"Remote Transmitter and Distributed Control Grounding and System Protection," Robert A. Durham and Marcus O. Durham, *Proceedings of 27th Annual Frontiers in Power Conference*, OSU, Stillwater, OK, October 1994.

Robert A Durham, PhD, PE
Expert Witness
Previous Four Years from September 15, 2023

Attorney	Case	Location	Issue	
Haynes Boone	Nabors v. Helmerich & Payne et al	Northern District, TX	Intellectual Property	Trial
McDermott Will & Emery LLP	Halliburton V. U.S. Well Services	Western District, TX	Intellectual Property	Trial
Jones, Oten & Jewell	Davis v. Tapp	Garfield County, OK	Fire / Injury	Trial
Haynes & Boone	Nabors Driling v. Helmerich & Payne et al	Northern District, TX	Intellectual Property	Depo
Mattingly Law	Fulton v. Aviagen et al	Muskogee County, OK	Building Codes	Trial
Baker Botts	US Well Services v. Halliburton	Western District, TX	Intellectual Property	Depo
Kelly, Morgan	Montanez v. Deepwell Energy Svcs	Ector County, TX	Flash Fire / Injury	Depo
Baker Botts	IPR 2021-01316	USPTO PTAB	Intellectual Property	Depo
Baker Botts	IPR 2021-01238	USPTO PTAB	Intellectual Property	Depo
Baker Botts	IPR 2021-01315	USPTO PTAB	Intellectual Property	Depo
Baker Botts	IPR 2021-01065	USPTO PTAB	Intellectual Property	Depo
Clancy & Thompson	Borth v. Phillips & Sons Trucking et al	Canadian County, OK	Injury	Depo
Baker Botts	IPR 2021-01034	USPTO PTAB	Intellectual Property	Depo
Baker Botts	IPR 2021-01033	USPTO PTAB	Intellectual Property	Depo
Baker Botts	IPR 2021-01032	USPTO PTAB	Intellectual Property	Depo
Stephen Jones	Davis v. Tapp	Garfield County	Fire / Injury	Depo
Kelly, Morgan	Calvillo v. On Point	Travis County, TX	Flash Fire / Injury	Depo
Hartline Barger	Ramirez v. Home Depot	Southern District, TX	Electrical Failure / Fire	Depo

Mcafee & Taft	Hale v. Southeast Colorado Power Association	Baca County, CO	Electrical Failure / Fire	Depo
Hartline Barger	Siqueros v. Templo Monte Horeb et al	El Paso County, TX	Injury	Depo
Naman, Howell	Lentz v Brenntag Pacific et al	Upton County, TX	Flash Fire / Injury	Depo
Craft Law Firm	Cason v. Cimarex et al	Victoria County, TX	Flash Fire / Injury	Depo
Naman, Howell	Lentz v Brenntag Pacific et al	Upton County, TX	Flash Fire / Injury	Depo