AO 120 (Rev. 08/10)

TO:	Mail Stop 8 Director of the U.S. Patent and Trademark Office P.O. Box 1450 Alexandria, VA 22313-1450	REPORT ON THE FILING OR DETERMINATION OF AN ACTION REGARDING A PATENT OR TRADEMARK

In Compliance with 35 U.S.C. § 290 and/or 15 U.S.C. § 1116 you are hereby advised that a court action has been filed in the U.S. District Court Eastern District of Texas on the following

☐ Trademarks or ☑ Patents. (☐ the patent action involves 35 U.S.C. § 292.):

DOCKET NO.	DATE FILED	U.S. DISTRICT COURT
2:22-cv-00322	8/19/2022	Eastern District of Texas

PLAINTIFF	DEFENDANT
LIONRA TECHNOLOGIES LIMITED	FORTINET, INC.

	PATENT OR TRADEMARK NO.	DATE OF PATENT OR TRADEMARK	HOLDER OF PATENT OR TRADEMARK
1	7,302,708	11/27/2007	Lionra Technologies Limited
2	7,685,436	3/23/2010	Lionra Technologies Limited
3	7,921,323	4/5/2011	Lionra Technologies Limited
4	8,566,612	10/22/2013	Lionra Technologies Limited
5			

In the above—entitled case, the following patent(s)/ trademark(s) have been included:

DATE INCLUDED	INCLUDED BY ☐ Amendment ☐ Answer ☐ Cross Bill ☐ Other Pleading	
PATENT OR TRADEMARK NO.	DATE OF PATENT OR TRADEMARK	HOLDER OF PATENT OR TRADEMARK
1		
2		
3		
4		
5		

In the above—entitled case, the following decision has been rendered or judgement issued:

DECISION/JUDGEMENT

CLERK	(BY) DEPUTY CLERK	DATE

Copy 1—Upon initiation of action, mail this copy to Director **Copy 3—Upon termination of action, mail this copy to Director**
Copy 2—Upon filing document adding patent(s), mail this copy to Director **Copy 4—Case file copy**

Print Save As... Reset

AO 120 (Rev. 08/10)

TO:	Mail Stop 8 Director of the U.S. Patent and Trademark Office P.O. Box 1450 Alexandria, VA 22313-1450	REPORT ON THE FILING OR DETERMINATION OF AN ACTION REGARDING A PATENT OR TRADEMARK

In Compliance with 35 U.S.C. § 290 and/or 15 U.S.C. § 1116 you are hereby advised that a court action has been filed in the U.S. District Court Eastern District of Texas on the following

☐ Trademarks or ☑ Patents. (☐ the patent action involves 35 U.S.C. § 292.):

DOCKET NO.	DATE FILED	U.S. DISTRICT COURT
2:22-cv-305	8/8/2022	Eastern District of Texas

PLAINTIFF	DEFENDANT
LIONRA TECHNOLOGIES LIMITED	CISCO SYSTEMS, INC.

	PATENT OR TRADEMARK NO.	DATE OF PATENT OR TRADEMARK	HOLDER OF PATENT OR TRADEMARK
1	7,916,630	3/29/2011	Lionra Technologies Limited
2	8,566,612	10/22/2013	Lionra Technologies Limited
3	7,921,323	4/5/2011	Lionra Technologies Limited
4	7,302,708	11/27/2007	Lionra Technologies Limited
5	7,685,436	3/23/2010	Lionra Technologies Limited

In the above—entitled case, the following patent(s)/ trademark(s) have been included:

DATE INCLUDED	INCLUDED BY ☐ Amendment ☐ Answer ☐ Cross Bill ☐ Other Pleading	
PATENT OR TRADEMARK NO.	DATE OF PATENT OR TRADEMARK	HOLDER OF PATENT OR TRADEMARK
1		
2		
3		
4		
5		

In the above—entitled case, the following decision has been rendered or judgement issued:

DECISION/JUDGEMENT

CLERK	(BY) DEPUTY CLERK	DATE

Copy 1—Upon initiation of action, mail this copy to Director **Copy 3—Upon termination of action, mail this copy to Director**
Copy 2—Upon filing document adding patent(s), mail this copy to Director **Copy 4—Case file copy**

Print Save As... Reset

UNITED STATES PATENT AND TRADEMARK OFFICE

UNITED STATES DEPARTMENT OF COMMERCE
United States Patent and Trademark Office
Address: COMMISSIONER FOR PATENTS
P.O. Box 1450
Alexandria, Virginia 22313-1450
www.uspto.gov

APPLICATION NO.	ISSUE DATE	PATENT NO.	ATTORNEY DOCKET NO.	CONFIRMATION NO.
10/798,074	11/27/2007	7302708	7162-0110	5321

68085 7590 11/07/2007
HARRIS CORPORATION
C/O DARBY & DARBY PC
P.O. BOX 770
CHURCH STREET STATION
NEW YORK, NY 10008-0770

ISSUE NOTIFICATION

The projected patent number and issue date are specified above.

Determination of Patent Term Adjustment under 35 U.S.C. 154 (b)
(application filed on or after May 29, 2000)

The Patent Term Adjustment is 707 day(s). Any patent to issue from the above-identified application will include an indication of the adjustment on the front page.

If a Continued Prosecution Application (CPA) was filed in the above-identified application, the filing date that determines Patent Term Adjustment is the filing date of the most recent CPA.

Applicant will be able to obtain more detailed information by accessing the Patent Application Information Retrieval (PAIR) WEB site (http://pair.uspto.gov).

Any questions regarding the Patent Term Extension or Adjustment determination should be directed to the Office of Patent Legal Administration at (571)-272-7702. Questions relating to issue and publication fee payments should be directed to the Customer Service Center of the Office of Patent Publication at (571)-272-4200.

APPLICANT(s) (Please see PAIR WEB site http://pair.uspto.gov for additional applicants):

Vincent Joseph Kovarik JR., Grant, FL;

Electronic Patent Application Fee Transmittal

Application Number:	10798074
Filing Date:	11-Mar-2004
Title of Invention:	ENFORCING COMPUTER SECURITY UTILIZING AN ADAPTIVE LATTICE MECHANISM
First Named Inventor/Applicant Name:	Vincent Joseph Kovarik
Filer:	Robert Joseph Sacco/Joyce Dougherty
Attorney Docket Number:	7162-0110

Filed as Large Entity

Utility Filing Fees

Description	Fee Code	Quantity	Amount	Sub-Total in USD($)
Basic Filing:				
Pages:				
Claims:				
Miscellaneous-Filing:				
Petition:				
Patent-Appeals-and-Interference:				
Post-Allowance-and-Post-Issuance:				
Utility Appl issue fee	1501	1	1440	1440
Publication fee for republication	1505	1	300	300

Description	Fee Code	Quantity	Amount	Sub-Total in USD($)
Extension-of-Time:				
Miscellaneous:				
Printed copy of patent - no color	8001	2	3	6
		Total in USD ($)		**1746**

Electronic Acknowledgement Receipt

EFS ID:	2309108
Application Number:	10798074
International Application Number:	
Confirmation Number:	5321
Title of Invention:	ENFORCING COMPUTER SECURITY UTILIZING AN ADAPTIVE LATTICE MECHANISM
First Named Inventor/Applicant Name:	Vincent Joseph Kovarik
Customer Number:	68085
Filer:	Robert Joseph Sacco/Joyce Dougherty
Filer Authorized By:	Robert Joseph Sacco
Attorney Docket Number:	7162-0110
Receipt Date:	11-OCT-2007
Filing Date:	11-MAR-2004
Time Stamp:	16:48:23
Application Type:	Utility under 35 USC 111(a)

Payment information:

Submitted with Payment	yes
Payment was successfully received in RAM	$1746
RAM confirmation Number	1822
Deposit Account	080870
The Director of the USPTO is hereby authorized to charge indicated fees and credit any overpayment as follows: Charge any Additional Fees required under 37 C.F.R. Section 1.16 and 1.17	

File Listing:

Document Number	Document Description	File Name	File Size(Bytes) /Message Digest	Multi Part /.zip	Pages (if appl.)
1	Issue Fee Payment (PTO-85B)	01277263.pdf	480875 91215bdb77fc6a24d065a5ea0190992a903c48d5	no	1
Warnings:					
Information:					
2	Fee Worksheet (PTO-06)	fee-info.pdf	8474 e67c79fefea2ddf7461627109a64ae15826a27a2	no	2
Warnings:					
Information:					
		Total Files Size (in bytes):	489349		

This Acknowledgement Receipt evidences receipt on the noted date by the USPTO of the indicated documents, characterized by the applicant, and including page counts, where applicable. It serves as evidence of receipt similar to a Post Card, as described in MPEP 503.

New Applications Under 35 U.S.C. 111
If a new application is being filed and the application includes the necessary components for a filing date (see 37 CFR 1.53(b)-(d) and MPEP 506), a Filing Receipt (37 CFR 1.54) will be issued in due course and the date shown on this Acknowledgement Receipt will establish the filing date of the application.

National Stage of an International Application under 35 U.S.C. 371
If a timely submission to enter the national stage of an international application is compliant with the conditions of 35 U.S.C. 371 and other applicable requirements a Form PCT/DO/EO/903 indicating acceptance of the application as a national stage submission under 35 U.S.C. 371 will be issued in addition to the Filing Receipt, in due course.

New International Application Filed with the USPTO as a Receiving Office
If a new international application is being filed and the international application includes the necessary components for an international filing date (see PCT Article 11 and MPEP 1810), a Notification of the International Application Number and of the International Filing Date (Form PCT/RO/105) will be issued in due course, subject to prescriptions concerning national security, and the date shown on this Acknowledgement Receipt will establish the international filing date of the application.

PART B - FEE(S) TRANSMITTAL

Complete and send this form, together with applicable fee(s), to: Mail **Mail Stop ISSUE FEE**
Commissioner for Patents
P.O. Box 1450
Alexandria, Virginia 22313-1450
or Fax (571)-273-2885

INSTRUCTIONS: This form should be used for transmitting the ISSUE FEE and PUBLICATION FEE (if required). Blocks 1 through 5 should be completed where appropriate. All further correspondence including the Patent, advance orders and notification of maintenance fees will be mailed to the current correspondence address as indicated unless corrected below or directed otherwise in Block 1, by (a) specifying a new correspondence address; and/or (b) indicating a separate "FEE ADDRESS" for maintenance fee notifications.

CURRENT CORRESPONDENCE ADDRESS (Note: Use Block 1 for any change of address)

39207 7590 08/29/2007

SACCO & ASSOCIATES, PA
P.O. BOX 30999
PALM BEACH GARDENS, FL 33420-0999

Note: A certificate of mailing can only be used for domestic mailings of the Fee(s) Transmittal. This certificate cannot be used for any other accompanying papers. Each additional paper, such as an assignment or formal drawing, must have its own certificate of mailing or transmission.

Certificate of Mailing or Transmission
I hereby certify that this Fee(s) Transmittal is being deposited with the United States Postal Service with sufficient postage for first class mail in an envelope addressed to the Mail Stop ISSUE FEE address above, or being facsimile transmitted to the USPTO (571) 273-2885, on the date indicated below.

(Depositor's name)
(Signature)
(Date)

APPLICATION NO.	FILING DATE	FIRST NAMED INVENTOR	ATTORNEY DOCKET NO.	CONFIRMATION NO.
10/798,074	03/11/2004	Vincent Joseph Kovarik JR.	7162-0110	5321

TITLE OF INVENTION: ENFORCING COMPUTER SECURITY UTILIZING AN ADAPTIVE LATTICE MECHANISM

APPLN. TYPE	SMALL ENTITY	ISSUE FEE DUE	PUBLICATION FEE DUE	PREV. PAID ISSUE FEE	TOTAL FEE(S) DUE	DATE DUE
nonprovisional	NO	$1400	$300	$0	$1700	11/29/2007

EXAMINER	ART UNIT	CLASS-SUBCLASS
SHAIFER HARRIMAN, DANT B	2134	726-026000

1. Change of correspondence address or indication of "Fee Address" (37 CFR 1.363).
☐ Change of correspondence address (or Change of Correspondence Address form PTO/SB/122) attached.
☐ "Fee Address" indication (or "Fee Address" Indication form PTO/SB/47; Rev 03-02 or more recent) attached. **Use of a Customer Number is required.**

2. For printing on the patent front page, list
(1) the names of up to 3 registered patent attorneys or agents OR, alternatively,
(2) the name of a single firm (having as a member a registered attorney or agent) and the names of up to 2 registered patent attorneys or agents. If no name is listed, no name will be printed.

1 DARBY & DARBY
2 ROBERT J. SACCO
3

3. ASSIGNEE NAME AND RESIDENCE DATA TO BE PRINTED ON THE PATENT (print or type)

PLEASE NOTE: Unless an assignee is identified below, no assignee data will appear on the patent. If an assignee is identified below, the document has been filed for recordation as set forth in 37 CFR 3.11. Completion of this form is NOT a substitute for filing an assignment.

(A) NAME OF ASSIGNEE: HARRIS CORPORATION

(B) RESIDENCE: (CITY and STATE OR COUNTRY): MELBOURNE, FL

Please check the appropriate assignee category or categories (will not be printed on the patent): ☐ Individual ☒ Corporation or other private group entity ☐ Government

4a. The following fee(s) are submitted:
☒ Issue Fee
☒ Publication Fee (No small entity discount permitted)
☒ Advance Order - # of Copies 2

4b. Payment of Fee(s): **(Please first reapply any previously paid issue fee shown above)**
☐ A check is enclosed.
☐ Payment by credit card. Form PTO-2038 is attached.
☒ The Director is hereby authorized to charge the required fee(s), any deficiency, or credit any overpayment, to Deposit Account Number 08-0870 (enclose an extra copy of this form).

5. **Change in Entity Status** (from status indicated above)
☐ a. Applicant claims SMALL ENTITY status. See 37 CFR 1.27.
☐ b. Applicant is no longer claiming SMALL ENTITY status. See 37 CFR 1.27(g)(2).

NOTE: The Issue Fee and Publication Fee (if required) will not be accepted from anyone other than the applicant; a registered attorney or agent; or the assignee or other party in interest as shown by the records of the United States Patent and Trademark Office.

Authorized Signature [signature] Date 10-11-07

Typed or printed name Robert J. Sacco Registration No. 35,667

This collection of information is required by 37 CFR 1.311. The information is required to obtain or retain a benefit by the public which is to file (and by the USPTO to process) an application. Confidentiality is governed by 35 U.S.C. 122 and 37 CFR 1.14. This collection is estimated to take 12 minutes to complete, including gathering, preparing, and submitting the completed application form to the USPTO. Time will vary depending upon the individual case. Any comments on the amount of time you require to complete this form and/or suggestions for reducing this burden, should be sent to the Chief Information Officer, U.S. Patent and Trademark Office, U.S. Department of Commerce, P.O. Box 1450, Alexandria, Virginia 22313-1450. DO NOT SEND FEES OR COMPLETED FORMS TO THIS ADDRESS. SEND TO: Commissioner for Patents, P.O. Box 1450, Alexandria, Virginia 22313-1450.

Under the Paperwork Reduction Act of 1995, no persons are required to respond to a collection of information unless it displays a valid OMB control number.

UNITED STATES PATENT AND TRADEMARK OFFICE

UNITED STATES DEPARTMENT OF COMMERCE
United States Patent and Trademark Office
Address: COMMISSIONER FOR PATENTS
P.O. Box 1450
Alexandria, Virginia 22313-1450
www.uspto.gov

APPLICATION NUMBER	PATENT NUMBER	GROUP ART UNIT	FILE WRAPPER LOCATION
10/798,074		2134	21M1

Correspondence Address / Fee Address Change

The following fields have been set to Customer Number 68085 on 10/03/2007

- Correspondence Address

The address of record for Customer Number 68085 is:
HARRIS CORPORATION
C/O DARBY & DARBY PC
P.O. BOX 770
CHURCH STREET STATION
NEW YORK,NY 10008-0770

OIPE IAP21 MAR 27 2006 PATENT & TRADEMARK OFFICE

PTO/SB/08A (07-05)
Approved for use through 07/31/2006. OMB 0651-0031
U.S. Patent and Trademark Office; U.S. DEPARTMENT OF COMMERCE
Under the Paperwork Reduction Act of 1995, no persons are required to respond to a collection of information unless it contains a valid OMB control number.

Substitute for form 1449/PTO

INFORMATION DISCLOSURE STATEMENT BY APPLICANT

(Use as many sheets as necessary)

Sheet 1 of 2

Complete if Known	
Application Number	10/798,074
Filing Date	March 11, 2004
First Named Inventor	KOVARIK, JR.
Art Unit	~~2193~~ 2109
Examiner Name	Dant B. Shaifer-Harriman
Attorney Docket Number	7162-0110

LC 10/02/07

U. S. PATENT DOCUMENTS

Examiner Initials*	Cite No.[1]	Document Number Number-Kind Code[2] (if known)	Publication Date MM-DD-YYYY	Name of Patentee or Applicant of Cited Document	Pages, Columns, Lines, Where Relevant Passages or Relevant Figures Appear
/DS/		US- 2002/0138322	09/26/2002	UMEZAWA, et al.	
/DS/		US- 6,023,765	02/08/2000	KUHN	
/DS/		US- 2004/0044655	03/04/2004	COTNER, et al.	
		US-			
		US-			
		US-			
		US-			
		US-			
		US-			
		US-			
		US-			
		US-			
		US-			
		US-			
		US-			
		US-			
		US-			
		US-			
		US-			

FOREIGN PATENT DOCUMENTS

Examiner Initials*	Cite No.[1]	Foreign Patent Document Country Code[3]-Number[4]-Kind Code[5] (if known)	Publication Date MM-DD-YYYY	Name of Patentee or Applicant of Cited Document	Pages, Columns, Lines, Where Relevant Passages Or Relevant Figures Appear	T[6]
/DS/		WO 03/088018	10/23/2003	RAYTHEON CO.		

Examiner Signature	/Dant Shaifer Harriman/	Date Considered	4/4/07

*EXAMINER: Initial if reference considered, whether or not citation is in conformance with MPEP 609. Draw line through citation if not in conformance and not considered. Include copy of this form with next communication to applicant. [1]Applicant's unique citation designation number (optional). [2]See Kinds Codes of USPTO Patent Documents at www.uspto.gov or MPEP 901.04. [3]Enter Office that issued the document, by the two-letter code (WIPO Standard ST.3). [4]For Japanese patent documents, the indication of the year of the reign of the Emperor must precede the serial number of the patent document. [5]Kind of document by the appropriate symbols as indicated on the document under WIPO Standard ST.16 if possible. [6]Applicant is to place a check mark here if English language Translation is attached.

This collection of information is required by 37 CFR 1.97 and 1.98. The information is required to obtain or retain a benefit by the public which is to file (and by the USPTO to process) an application. Confidentiality is governed by 35 U.S.C. 122 and 37 CFR 1.14. This collection is estimated to take 2 hours to complete, including gathering, preparing, and submitting the completed application form to the USPTO. Time will vary depending upon the individual case. Any comments on the amount of time you require to complete this form and/or suggestions for reducing this burden, should be sent to the Chief Information Officer, U.S. Patent and Trademark Office, P.O. Box 1450, Alexandria, VA 22313-1450. DO NOT SEND FEES OR COMPLETED FORMS TO THIS ADDRESS. SEND TO: Commissioner for Patents, P.O. Box 1450, Alexandria, VA 22313-1450.

If you need assistance in completing the form, call 1-800-PTO-9199 (1-800-786-9199) and select option 2.

UNITED STATES PATENT AND TRADEMARK OFFICE

UNITED STATES DEPARTMENT OF COMMERCE
United States Patent and Trademark Office
Address: COMMISSIONER FOR PATENTS
P.O. Box 1450
Alexandria, Virginia 22313-1450
www.uspto.gov

NOTICE OF ALLOWANCE AND FEE(S) DUE

39207 7590 08/29/2007

SACCO & ASSOCIATES, PA
P.O. BOX 30999
PALM BEACH GARDENS, FL 33420-0999

EXAMINER	
SHAIFER HARRIMAN, DANT B	
ART UNIT	PAPER NUMBER
2134	

DATE MAILED: 08/29/2007

APPLICATION NO.	FILING DATE	FIRST NAMED INVENTOR	ATTORNEY DOCKET NO.	CONFIRMATION NO.
10/798,074	03/11/2004	Vincent Joseph Kovarik JR.	7162-0110	5321

TITLE OF INVENTION: ENFORCING COMPUTER SECURITY UTILIZING AN ADAPTIVE LATTICE MECHANISM

APPLN. TYPE	SMALL ENTITY	ISSUE FEE DUE	PUBLICATION FEE DUE	PREV. PAID ISSUE FEE	TOTAL FEE(S) DUE	DATE DUE
nonprovisional	NO	$1400	$300	$0	$1700	11/29/2007

THE APPLICATION IDENTIFIED ABOVE HAS BEEN EXAMINED AND IS ALLOWED FOR ISSUANCE AS A PATENT. PROSECUTION ON THE MERITS IS CLOSED. THIS NOTICE OF ALLOWANCE IS NOT A GRANT OF PATENT RIGHTS. THIS APPLICATION IS SUBJECT TO WITHDRAWAL FROM ISSUE AT THE INITIATIVE OF THE OFFICE OR UPON PETITION BY THE APPLICANT. SEE 37 CFR 1.313 AND MPEP 1308.

THE ISSUE FEE AND PUBLICATION FEE (IF REQUIRED) MUST BE PAID WITHIN THREE MONTHS FROM THE MAILING DATE OF THIS NOTICE OR THIS APPLICATION SHALL BE REGARDED AS ABANDONED. THIS STATUTORY PERIOD CANNOT BE EXTENDED. SEE 35 U.S.C. 151. THE ISSUE FEE DUE INDICATED ABOVE DOES NOT REFLECT A CREDIT FOR ANY PREVIOUSLY PAID ISSUE FEE IN THIS APPLICATION. IF AN ISSUE FEE HAS PREVIOUSLY BEEN PAID IN THIS APPLICATION (AS SHOWN ABOVE), THE RETURN OF PART B OF THIS FORM WILL BE CONSIDERED A REQUEST TO REAPPLY THE PREVIOUSLY PAID ISSUE FEE TOWARD THE ISSUE FEE NOW DUE.

HOW TO REPLY TO THIS NOTICE:

I. Review the SMALL ENTITY status shown above.

If the SMALL ENTITY is shown as YES, verify your current SMALL ENTITY status:

A. If the status is the same, pay the TOTAL FEE(S) DUE shown above.

B. If the status above is to be removed, check box 5b on Part B - Fee(s) Transmittal and pay the PUBLICATION FEE (if required) and twice the amount of the ISSUE FEE shown above, or

If the SMALL ENTITY is shown as NO:

A. Pay TOTAL FEE(S) DUE shown above, or

B. If applicant claimed SMALL ENTITY status before, or is now claiming SMALL ENTITY status, check box 5a on Part B - Fee(s) Transmittal and pay the PUBLICATION FEE (if required) and 1/2 the ISSUE FEE shown above.

II. PART B - FEE(S) TRANSMITTAL, or its equivalent, must be completed and returned to the United States Patent and Trademark Office (USPTO) with your ISSUE FEE and PUBLICATION FEE (if required). If you are charging the fee(s) to your deposit account, section "4b" of Part B - Fee(s) Transmittal should be completed and an extra copy of the form should be submitted. If an equivalent of Part B is filed, a request to reapply a previously paid issue fee must be clearly made, and delays in processing may occur due to the difficulty in recognizing the paper as an equivalent of Part B.

III. All communications regarding this application must give the application number. Please direct all communications prior to issuance to Mail Stop ISSUE FEE unless advised to the contrary.

IMPORTANT REMINDER: Utility patents issuing on applications filed on or after Dec. 12, 1980 may require payment of maintenance fees. It is patentee's responsibility to ensure timely payment of maintenance fees when due.

PTOL-85 (Rev. 08/07) Approved for use through 08/31/2007.

VMware Ex. 1002
Page 11 of 257

PART B - FEE(S) TRANSMITTAL

Complete and send this form, together with applicable fee(s), to: Mail **Mail Stop ISSUE FEE**
Commissioner for Patents
P.O. Box 1450
Alexandria, Virginia 22313-1450
or Fax (571)-273-2885

INSTRUCTIONS: This form should be used for transmitting the ISSUE FEE and PUBLICATION FEE (if required). Blocks 1 through 5 should be completed where appropriate. All further correspondence including the Patent, advance orders and notification of maintenance fees will be mailed to the current correspondence address as indicated unless corrected below or directed otherwise in Block 1, by (a) specifying a new correspondence address; and/or (b) indicating a separate "FEE ADDRESS" for maintenance fee notifications.

CURRENT CORRESPONDENCE ADDRESS (Note: Use Block 1 for any change of address)

39207 7590 08/29/2007

SACCO & ASSOCIATES, PA
P.O. BOX 30999
PALM BEACH GARDENS, FL 33420-0999

Note: A certificate of mailing can only be used for domestic mailings of the Fee(s) Transmittal. This certificate cannot be used for any other accompanying papers. Each additional paper, such as an assignment or formal drawing, must have its own certificate of mailing or transmission.

Certificate of Mailing or Transmission

I hereby certify that this Fee(s) Transmittal is being deposited with the United States Postal Service with sufficient postage for first class mail in an envelope addressed to the Mail Stop ISSUE FEE address above, or being facsimile transmitted to the USPTO (571) 273-2885, on the date indicated below.

(Depositor's name)
(Signature)
(Date)

APPLICATION NO.	FILING DATE	FIRST NAMED INVENTOR	ATTORNEY DOCKET NO.	CONFIRMATION NO.
10/798,074	03/11/2004	Vincent Joseph Kovarik JR.	7162-0110	5321

TITLE OF INVENTION: ENFORCING COMPUTER SECURITY UTILIZING AN ADAPTIVE LATTICE MECHANISM

APPLN. TYPE	SMALL ENTITY	ISSUE FEE DUE	PUBLICATION FEE DUE	PREV. PAID ISSUE FEE	TOTAL FEE(S) DUE	DATE DUE
nonprovisional	NO	$1400	$300	$0	$1700	11/29/2007

EXAMINER	ART UNIT	CLASS-SUBCLASS
SHAIFER HARRIMAN, DANT B	2134	726-026000

1. Change of correspondence address or indication of "Fee Address" (37 CFR 1.363).
   - ☐ Change of correspondence address (or Change of Correspondence Address form PTO/SB/122) attached.
   - ☐ "Fee Address" indication (or "Fee Address" Indication form PTO/SB/47; Rev 03-02 or more recent) attached. **Use of a Customer Number is required.**

2. For printing on the patent front page, list
   (1) the names of up to 3 registered patent attorneys or agents OR, alternatively,
   (2) the name of a single firm (having as a member a registered attorney or agent) and the names of up to 2 registered patent attorneys or agents. If no name is listed, no name will be printed.

   1 _____
   2 _____
   3 _____

3. ASSIGNEE NAME AND RESIDENCE DATA TO BE PRINTED ON THE PATENT (print or type)

PLEASE NOTE: Unless an assignee is identified below, no assignee data will appear on the patent. If an assignee is identified below, the document has been filed for recordation as set forth in 37 CFR 3.11. Completion of this form is NOT a substitute for filing an assignment.

(A) NAME OF ASSIGNEE (B) RESIDENCE: (CITY and STATE OR COUNTRY)

Please check the appropriate assignee category or categories (will not be printed on the patent) : ☐ Individual ☐ Corporation or other private group entity ☐ Government

4a. The following fee(s) are submitted:
- ☐ Issue Fee
- ☐ Publication Fee (No small entity discount permitted)
- ☐ Advance Order - # of Copies _____

4b. Payment of Fee(s): **(Please first reapply any previously paid issue fee shown above)**
- ☐ A check is enclosed.
- ☐ Payment by credit card. Form PTO-2038 is attached.
- ☐ The Director is hereby authorized to charge the required fee(s), any deficiency, or credit any overpayment, to Deposit Account Number _____ (enclose an extra copy of this form).

5. **Change in Entity Status** (from status indicated above)
- ☐ a. Applicant claims SMALL ENTITY status. See 37 CFR 1.27.
- ☐ b. Applicant is no longer claiming SMALL ENTITY status. See 37 CFR 1.27(g)(2).

NOTE: The Issue Fee and Publication Fee (if required) will not be accepted from anyone other than the applicant; a registered attorney or agent; or the assignee or other party in interest as shown by the records of the United States Patent and Trademark Office.

Authorized Signature _____ Date _____

Typed or printed name _____ Registration No. _____

This collection of information is required by 37 CFR 1.311. The information is required to obtain or retain a benefit by the public which is to file (and by the USPTO to process) an application. Confidentiality is governed by 35 U.S.C. 122 and 37 CFR 1.14. This collection is estimated to take 12 minutes to complete, including gathering, preparing, and submitting the completed application form to the USPTO. Time will vary depending upon the individual case. Any comments on the amount of time you require to complete this form and/or suggestions for reducing this burden, should be sent to the Chief Information Officer, U.S. Patent and Trademark Office, U.S. Department of Commerce, P.O. Box 1450, Alexandria, Virginia 22313-1450. DO NOT SEND FEES OR COMPLETED FORMS TO THIS ADDRESS. SEND TO: Commissioner for Patents, P.O. Box 1450, Alexandria, Virginia 22313-1450.

Under the Paperwork Reduction Act of 1995, no persons are required to respond to a collection of information unless it displays a valid OMB control number.

UNITED STATES PATENT AND TRADEMARK OFFICE

UNITED STATES DEPARTMENT OF COMMERCE
United States Patent and Trademark Office
Address: COMMISSIONER FOR PATENTS
P.O. Box 1450
Alexandria, Virginia 22313-1450
www.uspto.gov

APPLICATION NO.	FILING DATE	FIRST NAMED INVENTOR	ATTORNEY DOCKET NO.	CONFIRMATION NO.
10/798,074	03/11/2004	Vincent Joseph Kovarik JR.	7162-0110	5321

39207 7590 08/29/2007
SACCO & ASSOCIATES, PA
P.O. BOX 30999
PALM BEACH GARDENS, FL 33420-0999

EXAMINER
SHAIFER HARRIMAN, DANT B

ART UNIT	PAPER NUMBER
2134	

DATE MAILED: 08/29/2007

Determination of Patent Term Adjustment under 35 U.S.C. 154 (b)
(application filed on or after May 29, 2000)

The Patent Term Adjustment to date is 707 day(s). If the issue fee is paid on the date that is three months after the mailing date of this notice and the patent issues on the Tuesday before the date that is 28 weeks (six and a half months) after the mailing date of this notice, the Patent Term Adjustment will be 707 day(s).

If a Continued Prosecution Application (CPA) was filed in the above-identified application, the filing date that determines Patent Term Adjustment is the filing date of the most recent CPA.

Applicant will be able to obtain more detailed information by accessing the Patent Application Information Retrieval (PAIR) WEB site (http://pair.uspto.gov).

Any questions regarding the Patent Term Extension or Adjustment determination should be directed to the Office of Patent Legal Administration at (571)-272-7702. Questions relating to issue and publication fee payments should be directed to the Customer Service Center of the Office of Patent Publication at 1-(888)-786-0101 or (571)-272-4200.

PTOL-85 (Rev. 08/07) Approved for use through 08/31/2007.

Notice of Allowability	Application No.	Applicant(s)	
	10/798,074	KOVARIK, VINCENT JOSEPH	
	Examiner	Art Unit	
	Dant B. Shaifer - Harriman	2134	

-- The MAILING DATE of this communication appears on the cover sheet with the correspondence address--

All claims being allowable, PROSECUTION ON THE MERITS IS (OR REMAINS) CLOSED in this application. If not included herewith (or previously mailed), a Notice of Allowance (PTOL-85) or other appropriate communication will be mailed in due course. **THIS NOTICE OF ALLOWABILITY IS NOT A GRANT OF PATENT RIGHTS.** This application is subject to withdrawal from issue at the initiative of the Office or upon petition by the applicant. See 37 CFR 1.313 and MPEP 1308.

1. ☒ This communication is responsive to *07/12/2007*.

2. ☒ The allowed claim(s) is/are *1 & 3-11 & 19, renumbered as claims 1-17*.

3. ☐ Acknowledgment is made of a claim for foreign priority under 35 U.S.C. § 119(a)-(d) or (f).
   a) ☐ All b) ☐ Some* c) ☐ None of the:
      1. ☐ Certified copies of the priority documents have been received.
      2. ☐ Certified copies of the priority documents have been received in Application No. _____ .
      3. ☐ Copies of the certified copies of the priority documents have been received in this national stage application from the International Bureau (PCT Rule 17.2(a)).

   * Certified copies not received: _____.

Applicant has THREE MONTHS FROM THE "MAILING DATE" of this communication to file a reply complying with the requirements noted below. Failure to timely comply will result in ABANDONMENT of this application.
THIS THREE-MONTH PERIOD IS NOT EXTENDABLE.

4. ☐ A SUBSTITUTE OATH OR DECLARATION must be submitted. Note the attached EXAMINER'S AMENDMENT or NOTICE OF INFORMAL PATENT APPLICATION (PTO-152) which gives reason(s) why the oath or declaration is deficient.

5. ☐ CORRECTED DRAWINGS (as "replacement sheets") must be submitted.
   (a) ☐ including changes required by the Notice of Draftsperson's Patent Drawing Review (PTO-948) attached
      1) ☐ hereto or 2) ☐ to Paper No./Mail Date _____.
   (b) ☐ including changes required by the attached Examiner's Amendment / Comment or in the Office action of Paper No./Mail Date _____.

   Identifying indicia such as the application number (see 37 CFR 1.84(c)) should be written on the drawings in the front (not the back) of each sheet. Replacement sheet(s) should be labeled as such in the header according to 37 CFR 1.121(d).

6. ☐ DEPOSIT OF and/or INFORMATION about the deposit of BIOLOGICAL MATERIAL must be submitted. Note the attached Examiner's comment regarding REQUIREMENT FOR THE DEPOSIT OF BIOLOGICAL MATERIAL.

Attachment(s)

1. ☒ Notice of References Cited (PTO-892)
2. ☐ Notice of Draftperson's Patent Drawing Review (PTO-948)
3. ☐ Information Disclosure Statements (PTO/SB/08), Paper No./Mail Date _____
4. ☐ Examiner's Comment Regarding Requirement for Deposit of Biological Material
5. ☐ Notice of Informal Patent Application
6. ☐ Interview Summary (PTO-413), Paper No./Mail Date _____ .
7. ☐ Examiner's Amendment/Comment
8. ☒ Examiner's Statement of Reasons for Allowance
9. ☐ Other _____.

KAMBIZ ZAND
SUPERVISORY PATENT EXAMINER

DETAILED ACTION

Response to Amendment

1. Claims: 2 &12 are cancelled.

2. Claims: 1 & 3-11 & 13 – 19 are pending respectively.

Allowable Subject Matter

3. Claims: 1 & 3-11 & 13 – 19 are allowable, and the rejections made on 1 & 3-11 & 13 – 19 claims are withdrawn.

Conclusion

Any inquiry concerning this communication or earlier communications from the examiner should be directed to Dant B. Shaifer - Harriman whose telephone number is 571-272-7910. The examiner can normally be reached on Monday - Thursday: 8:00am - 5:30pm Alt.Fridays off.

If attempts to reach the examiner by telephone are unsuccessful, the examiner's supervisor, Kambiz Zand can be reached on (571) 272-3811. The fax phone number for the organization where this application or proceeding is assigned is 571-273-8300.

Information regarding the status of an application may be obtained from the Patent Application Information Retrieval (PAIR) system. Status information for published applications may be obtained from either Private PAIR or Public PAIR. Status information for unpublished applications is available through Private PAIR only. For more information about the PAIR system, see http://pair-direct.uspto.gov. Should you have questions on access to the Private PAIR system, contact the Electronic Business Center (EBC) at 866-217-9197 (toll-free). If you would like assistance from a USPTO Customer Service Representative or access to the automated information system, call 800-786-9199 (IN USA OR CANADA) or 571-272-1000.

D.S.H.

KAMBIZ ZAND
SUPERVISORY PATENT EXAMINER

Notice of References Cited	Application/Control No. 10/798,074	Applicant(s)/Patent Under Reexamination KOVARIK, VINCENT JOSEPH	
	Examiner Dant B. Shaifer - Harriman	Art Unit 2134	Page 1 of 1

U.S. PATENT DOCUMENTS

*		Document Number Country Code-Number-Kind Code	Date MM-YYYY	Name	Classification
*	A	US-5,970,246	10-1999	Moughani et al.	717/128
*	B	US-5,887,065	03-1999	Audebert, Yves	713/172
*	C	US-2004/0193891	09-2004	Ollila, Juha	713/182
*	D	US-2005/0229000	10-2005	Shoji et al.	713/182
*	E	US-2004/0123159	06-2004	Kerstens et al.	713/202
*	F	US-2004/0107345	06-2004	Brandt et al.	713/171
*	G	US-2004/0044655	03-2004	Cotner et al.	707/003
	H	US-			
	I	US-			
	J	US-			
	K	US-			
	L	US-			
	M	US-			

FOREIGN PATENT DOCUMENTS

*		Document Number Country Code-Number-Kind Code	Date MM-YYYY	Country	Name	Classification
	N					
	O					
	P					
	Q					
	R					
	S					
	T					

NON-PATENT DOCUMENTS

*		Include as applicable: Author, Title Date, Publisher, Edition or Volume, Pertinent Pages)
	U	
	V	
	W	
	X	

*A copy of this reference is not being furnished with this Office action. (See MPEP § 707.05(a).)
Dates in MM-YYYY format are publication dates. Classifications may be US or foreign.

Issue Classification

Application/Control No.	Applicant(s)/Patent Under Reexamination
10798074	KOVARIK, VINCENT JOSEPH
Examiner	**Art Unit**
Shaifer - Harriman , Dant B	2134

ORIGINAL		INTERNATIONAL CLASSIFICATION									
CLASS	SUBCLASS	CLAIMED					NON-CLAIMED				
726	26	G	0	6	F	7 / 04 (2006.01.01)					

CROSS REFERENCE(S)

CLASS	SUBCLASS (ONE SUBCLASS PER BLOCK)				
709	223				

Shaifer - Harriman , Dant (Assistant Examiner)	08/16/2007 (Date)		**Total Claims Allowed:** 17
(Legal Instruments Examiner) (Date)	KAMBIZ ZAND SUPERVISORY PATENT EXAMINER (Primary Examiner) (Date) 08/20/07	O.G. Print Claim(s) 1	O.G. Print Figure 19

Index of Claims	Application/Control No.	Applicant(s)/Patent Under Reexamination
	10798074	KOVARIK, VINCENT JOSEPH
	Examiner	**Art Unit**
	Shaifer - Harriman , Dant B	2134

✓	Rejected	-	Cancelled	N	Non-Elected	A	Appeal
=	Allowed	÷	Restricted	I	Interference	O	Objected

☐ Claims renumbered in the same order as presented by applicant ☐ CPA ☐ T.D. ☐ R.1.47

CLAIM		DATE								
Final	Original	08/15/2007								
1	1	=								
	2	-								
2	3	=								
3	4	=								
4	5	=								
5	6	=								
6	7	=								
7	8	=								
8	9	=								
9	10	=								
10	11	=								
	12	-								
11	13	=								
12	14	=								
13	15	=								
14	16	=								
15	17	=								
16	18	=								
17	19	=								

Search Notes	Application/Control No.	Applicant(s)/Patent Under Reexamination
	10798074	KOVARIK, VINCENT JOSEPH
	Examiner	**Art Unit**
	Shaifer - Harriman , Dant B	2109

SEARCHED

Class	Subclass	Date	Examiner
709	229	4/9/2007	dsh
713	201	4/5/2007	dsh
713	166	4/5/2007	dsh
726	23	4/9/2007	dsh
709	219	4/9/2007	dsh

SEARCH NOTES

Search Notes	Date	Examiner
East Search (see attached) , NPL search , EIC NPL search	4/5/2007-4/9/2007	dsh
Inventor Search, reveiwed related applications (see attached)	4/3/2007	dsh
Consolted with Mr. Matt Heneghan, AU=2134	4/9/2007	dsh

INTERFERENCE SEARCH

Class	Subclass	Date	Examiner
713	201	08/16/2007	dsh
713	166	08/16/2007	dsh
709	229	08/16/2007	dsh
709	219	08/16/2007	dsh
726	23	08/16/2007	dsh
713		08/16/2007	dsh
726		08/16/2007	dsh
380		08/16/2007	dsh

Home | Login | Logout | Access Information | Alerts | Purchase History | Cart |

Welcome United States Patent and Trademark Office

View Selected Items BROWSE SEARCH IEEE XPLORE GUIDE

Results for " (((cascade or cascaded or order or ordered or sequence)and (access or entry) and (security or secu... " e-mail

Your search matched **12** of **1632036** documents. You selected **12** items.

Display Format: ○ Citation ◉ Citation & Abstract

Article Information **View: 1-12 | View**

» Download Citations

Citation & Abstract

ASCII Text

» Learn more

» Key

IEEE JNL	IEEE Journal or Magazine
IEE JNL	IEE Journal or Magazine
IEEE CNF	IEEE Conference Proceeding
IEE CNF	IEE Conference Proceeding
IEEE STD	IEEE Standard

1. **A temporal access control mechanism for database systems**
   Bertino, E.; Bettini, C.; Ferrari, E.; Samarati, P.
   Knowledge and Data Engineering, IEEE Transactions on
   Volume: 8 Issue: 1 Feb 1996
   Page(s): 67-80
   Digital Object Identifier 10.1109/69.485637
   Summary: The paper presents a discretionary access control model in which authoriz temporal intervals of validity. An authorization is automatically revoked when the assoc interval expires. The proposed model provides rules for the.....
   AbstractPlus | References | Full Text: PDF **IEEE JNL**

2. **A logic for state transformations in authorization policies**
   Yun Bai; Varadharajan, V.
   Computer Security Foundations Workshop, 1997. Proceedings., 10th
   10-12 Jun 1997
   Page(s): 173-182
   Digital Object Identifier 10.1109/CSFW.1997.596810
   Summary: In a multi-user information-sharing system, an authorization policy provides and control access to system, applications and information. In the real world, an autho temporal properties. That is, it needs to be .....
   AbstractPlus | Full Text: PDF **IEEE CNF**

3. **Biometric identification through speaker verification over telephone lines**
   Gonzalez-Rodriguez, J.; Gruz-Llanas, S.; Ortega-Garcia, J.
   Security Technology, 1999. Proceedings, IEEE 33rd Annual 1999 International Carnal on
   1999
   Page(s): 238-242
   Digital Object Identifier 10.1109/CCST.1999.797919
   Summary: In this paper, the identity of a remote user is verified through his voice by n telephone in order to gain access to a specific system or service. We have used state-independent speaker modeling algorithms, likelihood .....
   AbstractPlus | Full Text: PDF **IEEE CNF**

4. **A fast automaton-based method for detecting anomalous program behaviors**
   Sekar, R.; Bendre, M.; Dhurjati, D.; Bollineni, P.
   Security and Privacy, 2001. S&P 2001. Proceedings. 2001 IEEE Symposium on
   2001
   Page(s): 144-155
   Digital Object Identifier 10.1109/SECPRI.2001.924295
   Summary: Anomaly detection on system call sequences has become perhaps the mo approach for detecting novel intrusions. A natural way for learning sequences is to use automaton (FSA). However previous research indicates that FSA-lea.....
   AbstractPlus | Full Text: PDF **IEEE CNF**

VMware Ex. 1002
Page 21 of 257

5. **Performance analysis on new biometric gait motion model**
ChewYean Yam; Nixon, M.S.; Carter, J.N.
Image Analysis and Interpretation, 2002. Proceedings. Fifth IEEE Southwest Symposi
2002
Page(s): 31-34
Digital Object Identifier 10.1109/IAI.2002.999884
Summary: Recognising people by the way they walk and/or run is new. A novel analy is invariant to human gait of walking and running is developed based on the concept o coupled oscillators and the biomechanics of human walking and.....
AbstractPlus | Full Text: PDF **IEEE CNF**

6. **Design validation of ZCSP with SPIN**
Beaudenon, V.; Encrenaz, E.; Desbarbieux, J.-L.
Application of Concurrency to System Design, 2003. Proceedings. Third International
18-20 June 2003
Page(s): 102- 110
Digital Object Identifier 10.1109/CSD.2003.1207704
Summary: We consider the problem of specifying a model of the zero copy secured purpose of LTL verification with the SPIN model checker. ZCSP is based on direct me Data is directly read/written in user space memory, decreasing la.....
AbstractPlus | Full Text: PDF **IEEE CNF**

7. **sTuples: semantic tuple spaces**
Khushraj, D.; Lassila, O.; Finin, T.
Mobile and Ubiquitous Systems: Networking and Services, 2004. MOBIQUITOUS 200 Annual International Conference on
22-26 Aug. 2004
Page(s): 268- 277
Digital Object Identifier 10.1109/MOBIQ.2004.1331733
Summary: Tuple spaces offer a coordination infrastructure for communication betwe entities by providing a logically shared memory along with data persistence, transactio well as temporal and spatial decoupling - properties that ma.....
AbstractPlus | Full Text: PDF **IEEE CNF**

8. **A first step towards formal verification of security policy properties for RBAC**
Drouineaud, M.; Bortin, M.; Torrini, P.; Sohr, K.
Quality Software, 2004. QSIC 2004. Proceedings. Fourth International Conference on
8-9 Sept. 2004
Page(s): 60- 67
Digital Object Identifier 10.1109/QSIC.2004.1357945
Summary: Considering the current expansion of IT-infrastructure, the security of the infrastructure becomes increasingly important. Therefore, assuring certain security pro systems by formal methods is desirable. So far in secur.....
AbstractPlus | Full Text: PDF **IEEE CNF**

9. **Analysis and Modeling of Advanced PIM Architecture Design Tradeoffs**
Upchurch, E.; Sterling, T.; Brockman, J.
Supercomputing, 2004. Proceedings of the ACM/IEEE SC2004 Conference
06-12 Nov. 2004
Page(s): 12- 12
Digital Object Identifier 10.1109/SC.2004.11
Summary: A major trend in high performance computer architecture over the last two migration of memory in the form of high speed caches onto the microprocessor semic Where temporal locality in the computation is high, caches prove.....
AbstractPlus | Full Text: PDF **IEEE CNF**

10. **Token based path authorization at interconnection points between hybrid netwo lambda grid**
Gommans, L.; de Laat, C.; Meijer, R.
Broadband Networks, 2005 2nd International Conference on

3-7 Oct. 2005
Page(s): 1378- 1385 Vol. 2
Digital Object Identifier 10.1109/ICBN.2005.1589768
Summary: In order to provide cost effective transport services for highly demanding c applications, National Research Networks (NRNs) are considering additional types of a network infrastructures. Next to traditional IP access.....

AbstractPlus | Full Text: PDF **IEEE CNF**

11. A Scalable and IntrusionÂ¿tolerant Digital TimeÂ¿stamping System
Tulone, D.
Communications, 2006. ICC '06. IEEE International Conference on
Volume: 5 June 2006
Page(s): 2357-2363
Digital Object Identifier 10.1109/ICC.2006.255122
Summary: Secure digital timeÂ¿stamps play a crucial role in many applications that r correctness of timeÂ¿sensitive information. WellÂ¿known timeÂ¿stamping systems ar linking schemes which provide a relative temporal order by linking reque.....

AbstractPlus | Full Text: PDF **IEEE CNF**

12. U biquitous Semantic Space: A context-aware and coordination middleware for U Computing
Sudha, R.; Rajagopalan, M.R.; Selvanayaki, M.; Selvi, S.Thamarai
Communication Systems Software and Middleware, 2007. COMSWARE 2007. 2nd Int Conference on
7-12 Jan. 2007
Page(s): 1-7
Digital Object Identifier 10.1109/COMSWA.2007.382562
Summary: Ubiquitous Computing poses the challenge of increased communication, c and functionality. In a highly dynamic and weekly connected ubiquitous environment, c to the network (synchronous communication) is very difficult.....

AbstractPlus | Full Text: PDF **IEEE CNF**

View: 1-12 | View Search Resu

Help Contact Us Privacy & S

© Copyright 2006 IEEE –

Indexed by Inspec

Results for " (((sequence or order or ordered or cascade or cascaded) and (access or entry) and (secure or securit... "
Your search matched **733** of **1632036** documents. You selected **25** items.

e-mail

Display Format: ○ Citation ◉ Citation & Abstract

Article Information View: 1-25 | View

1. **An n-grid model for group authorization**
   Wen-Gong Shieh; Weems, B.; Kavi, K.M.
   Computer Security Applications Conference, 1990., Proceedings of the Sixth Annual
   3-7 Dec 1990
   Page(s): 384-392
   Digital Object Identifier 10.1109/CSAC.1990.143813
   Summary: The n-grid model for group authorization and access control extends the N representation of two-dimensional partial orders and incorporates the implicit authoriz model. The n-grid is a representation of multi-dimensional partial .....
   AbstractPlus | Full Text: PDF **IEEE CNF**

2. **A temporal access control mechanism for database systems**
   Bertino, E.; Bettini, C.; Ferrari, E.; Samarati, P.
   Knowledge and Data Engineering, IEEE Transactions on
   Volume: 8 Issue: 1 Feb 1996
   Page(s): 67-80
   Digital Object Identifier 10.1109/69.485637
   Summary: The paper presents a discretionary access control model in which authoriz temporal intervals of validity. An authorization is automatically revoked when the assoc interval expires. The proposed model provides rules for the.....
   AbstractPlus | References | Full Text: PDF **IEEE JNL**

3. **Reducing manpower intensive tasks through automation of security technologie**
   Carback, R.T.
   Security Technology, 1995. Proceedings. Institute of Electrical and Electronics Engine 1995 International Carnahan Conference on
   18-20 Oct 1995
   Page(s): 331-339
   Digital Object Identifier 10.1109/CCST.1995.524932
   Summary: Security in today's government and commercial environments is changing. to provide manpower against security threats is diminishing. Risk management is prefe avoidance. In order for management to ensure that the appropriat.....
   AbstractPlus | Full Text: PDF **IEEE CNF**

4. **Multiple intelligent agent supported Internet security system: issues, current sol proposed approach**
   Lin Zeng; huaiqing Wamg; Lee, M.K.O.
   Intelligent Processing Systems, 1997. ICIPS '97. 1997 IEEE International Conference
   Volume: 1 28-31 Oct 1997
   Page(s): 920-922 vol.1
   Digital Object Identifier 10.1109/ICIPS.1997.672965
   Summary: The Internet has become a common target to attack because of security cc of incidents, such as attempted and successful intrusions, have grown dramatically. Se have shown that many individuals and companies are abstaining .....
   AbstractPlus | Full Text: PDF **IEEE CNF**

» Download Citations

Citation & Abstract

ASCII Text

» Learn more

» Key

IEEE JNL	IEEE Journal or Magazine
IEE JNL	IEE Journal or Magazine
IEEE CNF	IEEE Conference Proceeding
IEE CNF	IEE Conference Proceeding
IEEE STD	IEEE Standard

Search string:

(cascade or cascaded or sequence or order or ordered) and (access or entry) and (security or secure or authorize or authorization)

5. **Specifying application-level security in workflow systems**
Olivier, M.S.; van de Riet, R.P.; Gudes, E.
Database and Expert Systems Applications, 1998. Proceedings. Ninth International W
25-28 Aug 1998
Page(s): 346-351
Digital Object Identifier 10.1109/DEXA.1998.707423
Summary: A workflow process involves the execution of a set of related activities ove
a specific task. Security requires that such activities may only be performed by authori
order to enforce such requirements, access to the u.....
AbstractPlus | Full Text: PDF **IEEE CNF**

6. **A contextual role-based access control authorization model for electronic patien**
Motta, G.H.M.B.; Furuie, S.S.
Information Technology in Biomedicine, IEEE Transactions on
Volume: 7 Issue: 3 Sept. 2003
Page(s): 202- 207
Digital Object Identifier 10.1109/TITB.2003.816562
Summary: The design of proper models for authorization and access control for elect
record (EPR) is essential to a wide scale use of EPR in large health organizations. In t
propose a contextual role-based access control authorizatio.....
AbstractPlus | References | Full Text: PDF **IEEE JNL**

7. **Human computer interaction through consolidation and visualization for order e**
Toyoda, S.; Niki, N.; Nishitani, H.
Engineering in Medicine and Biology Society, 2003. Proceedings of the 25th Annual In
Conference of the IEEE
Volume: 2 17-21 Sept. 2003
Page(s): 1280- 1283 Vol.2
Digital Object Identifier 10.1109/IEMBS.2003.1279500
Summary: In this paper, we propose a human computer interaction model through cc
visualization for order entry systems. This model makes effective use of the patient da
features 1) the consolidation of order data, 2) the visualizatio.....
AbstractPlus | Full Text: PDF **IEEE CNF**

8. **Secure access to corporate resources in a multi-access perspective: needs, pro solutions**
Casole, M.; Yi Cheng
Personal Mobile Communications Conference, 2003. 5th European (Conf. Publ. No. 4
22-25 April 2003
Page(s): 482- 489
Summary: The modern businessman needs to access corporate resources constantl
the access location, thus improving effectiveness. In order to accomplish this, a numbe
technologies allow mobile users to be connected to some kind of n.....
AbstractPlus | Full Text: PDF **IEE CNF**

9. **A first step towards formal verification of security policy properties for RBAC**
Drouineaud, M.; Bortin, M.; Torrini, P.; Sohr, K.
Quality Software, 2004. QSIC 2004. Proceedings. Fourth International Conference on
8-9 Sept. 2004
Page(s): 60- 67
Digital Object Identifier 10.1109/QSIC.2004.1357945
Summary: Considering the current expansion of IT-infrastructure, the security of the
infrastructure becomes increasingly important. Therefore, assuring certain security pro
systems by formal methods is desirable. So far in secur.....
AbstractPlus | Full Text: PDF **IEEE CNF**

10. **Database security - concepts, approaches, and challenges**
Bertino, E.; Sandhu, R.
Dependable and Secure Computing, IEEE Transactions on
Volume: 2 Issue: 1 Jan.-March 2005

VMware Ex. 1002
Page 25 of 257

Page(s): 2- 19
Digital Object Identifier 10.1109/TDSC.2005.9
Summary: As organizations increase their reliance on, possibly distributed, informatic daily business, they become more vulnerable to security breaches even as they gain p efficiency advantages. Though a number of techniques, such.....

AbstractPlus | Full Text: PDF **IEEE JNL**

11. **Security service adaptation for embedded service systems in changing environr**
Il lner, S.; Pohl, A.; Krumm, H.
Industrial Informatics, 2004. INDIN '04. 2004 2nd IEEE International Conference on
24-26 June 2004
Page(s): 457- 462
Digital Object Identifier 10.1109/INDIN.2004.1417387
Summary: Distributed embedded applications increasingly operate in changing envir the application security depends on the type and properties of the currently used comr services and employed devices. While vulnerabilities, threats, and .....

AbstractPlus | Full Text: PDF **IEEE CNF**

12. **R andom-access control mechanisms using adaptive traffic load in ALOHA and (for EDGE**
Rivero-Angeles, M.E.; Lara-Rodriguez, D.; Cruz-Perez, F.A.
Vehicular Technology, IEEE Transactions on
Volume: 54 Issue: 3 May 2005
Page(s): 1160- 1186
Digital Object Identifier 10.1109/TVT.2005.844657
Summary: In this paper, three random access control mechanisms based on the well ALOHA, NP-CSMA, and 1P-CSMA protocols are presented. The basic idea is to limit t transmissions and retransmissions at high traffic loads in order to m.....

AbstractPlus | References | Full Text: PDF **IEEE JNL**

13. **N ew authentication method for mobile centric communications**
Hongyuan Chen; Sivakumar, T.V.L.N.
Vehicular Technology Conference, 2005. VTC 2005-Spring. 2005 IEEE 61st
Volume: 5 30 May-1 June 2005
Page(s): 2780- 2784 Vol. 5
Digital Object Identifier 10.1109/VETECS.2005.1543853
Summary: This paper proposes a new authentication scheme for accessing contents applications in both mobile device and Internet. A user first divide all the contents, sen applications in both mobile device and the Internet into four gr.....

AbstractPlus | Full Text: PDF **IEEE CNF**

14. **Job -centric security model for open collaborative environment**
Demchenko, Y.; de Laat, C.; Gommans, L.; Oudenaarde, B.; Tokmakoff, A.; Snijders, I
Collaborative Technologies and Systems, 2005. Proceedings of the 2005 International
15-20 May 2005
Page(s): 69- 77
Digital Object Identifier 10.1109/ISCST.2005.1553296
Summary: This paper describes the design and development of a flexible, customer infrastructure for open collaborative environments. The experiences were gained withi of the collaboratory.nl project. The work is based on exten.....

AbstractPlus | Full Text: PDF **IEEE CNF**

15. **Expl oiting Hierarchical Identity-Based Encryption for Access Control to Pervasi Information**
Hengartner, U.; Steenkiste, P.
Security and Privacy for Emerging Areas in Communications Networks, 2005. Secure(International Conference on
05-09 Sept. 2005
Page(s): 384- 396
Digital Object Identifier 10.1109/SECURECOMM.2005.18

VMware Ex. 1002
Page 26 of 257

Summary: Access control to confidential information in pervasive computing environr challenging for multiple reasons: First, a client requesting access might not know whicl are necessary in order to be granted access to the requested inf.....

AbstractPlus | Full Text: PDF **IEEE CNF**

16. A Multi-dimension Rule Update in a TCAM-based High-Performance Network Se
Hae-Jin Jeong; Il-Seop Song; Taeck-Geun Kwon; Yoo-Kyoung Lee
Advanced Information Networking and Applications, 2006. AINA 2006. 20th Internatior
Volume: 2 18-20 April 2006
Page(s): 62- 66
Digital Object Identifier 10.1109/AINA.2006.37
Summary: Network security systems such as firewall and intrusion prevention system packet classification rule to allow or protect the network traffic. In addition, they are for multi-gigabit speed in order to deploy the current Inter.....

AbstractPlus | Full Text: PDF **IEEE CNF**

17. Fr ameworks for Secured Business Process Management Systems
Haeng-Kon Kim; Roger Y. Lee; Hae-Sool Yang
Software Engineering Research, Management and Applications, 2006. Fourth Internat on
09-11 Aug. 2006
Page(s): 57- 65
Digital Object Identifier 10.1109/SERA.2006.38
Summary: This paper formally defines a role-driven security and access control mod process in order eventually to provide a theoretical basis for realizing the secured busi management systems. That is, we propose a graphical repre.....

AbstractPlus | Full Text: PDF **IEEE CNF**

18. Design of security state machine of access control for control object based on II
Bin Duan; Bing Liu
Power Engineering Society General Meeting, 2006. IEEE
18-22 June 2006
Page(s): 3 pp.-
Digital Object Identifier 10.1109/PES.2006.1709328
Summary: Access control with identity authentication becomes crucial for critical circu operation in the substation automation system. According to IEC 61850, the implemen control policy depends on a virtual access view. But the sta.....

AbstractPlus | Full Text: PDF **IEEE CNF**

19. Security Constraints in Access Control of Information System Using UML Langu
Ane ta Poniszewska-Maranda
Enabling Technologies: Infrastructure for Collaborative Enterprises, 2006. WETICE '06 International Workshops on
June 2006
Page(s): 332-337
Digital Object Identifier 10.1109/WETICE.2006.58
Summary: Process of security administration in an information system is a complex ta constraints should be expressed in order to define in the proper way the security policy constraints can be classified into two groups. The fir.....

AbstractPlus | Full Text: PDF **IEEE CNF**

20. Qu antifiable Security Metrics for Large Scale Heterogeneous Systems
Syed Naqvi; Michel Riguidel
Carnahan Conferences Security Technology, Proceedings 2006 40th Annual IEEE Int
Oct. 2006
Page(s): 209-215
Digital Object Identifier 10.1109/CCST.2006.313452
Summary: The exponential growth of information technology and the prospect of incre access to the computing, communications, and storage resources have made these sy vulnerable to attacks. Use of heterogeneous devices and communication li.....

AbstractPlus | Full Text: PDF **IEEE CNF**

21. Secu rity for FTTx Optical Access Networks
Walid Shawbaki; Ahmed Kamal
Local Computer Networks, Proceedings 2006 31st IEEE Conference on
Nov. 2006
Page(s): 221-228
Digital Object Identifier 10.1109/LCN.2006.322103
Summary: Passive optical networks (PONs) is the answer to increasing demand on b enabler for Fiber To The x (FTTx) implementation, where x can be Home (FTTH), Curl Building (FTTB). However, PONs use shared fiber link with broadcast a.....

AbstractPlus | Full Text: PDF **IEEE CNF**

22. Chaotic functions for generating binary sequences and their suitability in Multip
M andi, Mahalinga V.; Murali, R.; Haribhat, K.N.
Communication Technology, 2006. ICCT '06. International Conference on
Nov. 2006
Page(s): 1-4
Digital Object Identifier 10.1109/ICCT.2006.341812
Summary: Chaotic sequences have good correlation properties and they can be used sequences in Spread Spectrum Communication. Chaotic functions are highly sensitive condition and exhibit non-linear behavior. In Chaotic spread spectrum com.....

AbstractPlus | Full Text: PDF **IEEE CNF**

23. C oncurrency Control using Subject- and Purpose-Oriented (SPO) View
Enokido, Tomoya; Takizawa, Makoto
Availability, Reliability and Security, 2007. ARES 2007. The Second International Conf
10-13 April 2007
Page(s): 454-464
Digital Object Identifier 10.1109/ARES.2007.60
Summary: In information systems, multiple transactions issued by subjects manipulat conflicting way. Conflicting access requests from multiple transactions have to be seri various ways to order multiple access requests like FIFO.....

AbstractPlus | Full Text: PDF **IEEE CNF**

24. C ontext-Aware Access Control Making Access Control Decisions Based on Con
Lachmund, Sven; Walter, Thomas; Gomez, Laurent; Bussard, Laurent; Olk, Eddy
Mobile and Ubiquitous Systems - Workshops, 2006. 3rd Annual International Conferer
17-21 July 2006
Page(s): 1-8
Digital Object Identifier 10.1109/MOBIQW.2006.361782
Summary: In ubiquitous computing environments access control decisions have to be changes of the situation or state of an entity, in order to properly adjust to these chang need of manual interaction. A solution to this challenge is.....

AbstractPlus | Full Text: PDF **IEEE CNF**

25. R ole-based Concurrency Control in a Subject- and Purpose-Oriented (SPO) View
Enokido, Tomoya; Barolli, Valbona; Takizawa, Makoto
Advanced Information Networking and Applications, 2007. AINA '07. 21st International
21-23 May 2007
Page(s): 171-178
Digital Object Identifier 10.1109/AINA.2007.124
Summary: In information systems, processes have to be scheduled to share a limited resource objects like memory and CPU with other processes. In database systems, co requests from multiple transactions have to be serialized. There ar.....

AbstractPlus | Full Text: PDF **IEEE CNF**

View: 1-25 | View Search Resu

VMware Ex. 1002
Page 28 of 257

Help Contact Us Privacy &

© Copyright 2006 IEEE –

Indexed by Inspec

PORTAL
USPTO

Subscribe (Full Service) Register (Limited Service, Free) Login

Search: ◉ The ACM Digital Library ○ The Guide

(sequence or order or ordered or cascade or cascaded) and (ac

THE ACM DIGITAL LIBRARY

Feedb

Search String same as for IEEE Search

Terms used:
sequence or **order** or **ordered** or **cascade** or **cascaded** and **access** or **entry** and **secure** or **security** or **authoriz**

Sort results by relevance

Display results expanded form

Save results to a Binder

Search Tips

☐ Open results in a new window

Results 1 - 20 of 200

Best 200 shown

Result page: **1** 2 3 4 5 6 7 8 9 10 next

1 A taxonomy for secure object-oriented databases
Martin S. Olivier, Sebastiaan H. von Solms
March 1994 **ACM Transactions on Database Systems (TODS)**, Volume 19 Issue 1
Publisher: ACM Press
Full text available: pdf(3.05 MB) Additional Information: full citation, abstract, referen

This paper proposes a taxonomy for secure object-oriented databases in order to clarify the issı indicates some implications of the various choices one may make when designing such a databa relational databases. The object-oriented database model is more complex than the relational n databases are more complex than ...

Keywords: formal security models, information security, multilevel secure databases, object-o

2 The relational model for database management: version 2
E. F. Codd
January 1990 Book
Publisher: Addison-Wesley Longman Publishing Co., Inc.
Full text available: pdf(28.61 MB) Additional Information: full citation, abstract, referen

From the Preface (See Front Matter for full Preface)

An important adjunct to precision is a sound theoretical foundation. The relational model is solic logic and the theory of relations. This book, however, does not dwell on the theoretical foundati that I now perceive as important for database users, and therefore for DBMS vendors. My perce

3 A model of OASIS role-based access control and its support for active security
Jean Bacon, Ken Moody, Walt Yao
November 2002 **ACM Transactions on Information and System Security (TISSEC)**, Volume 5
Publisher: ACM Press
Full text available: pdf(352.06 KB) Additional Information: full citation, abstract, referen

OASIS is a role-based access control architecture for achieving secure interoperation of service: to allow autonomous management domains to specify their own access control policies and to i Services define roles and implement formally specified policy to control role activation and serv appropriate context, in order to activat ...

VMware Ex. 1002
Page 30 of 257

Keywords: Certificates, OASIS, RBAC, distributed systems, policy, role-based access control, s

4 Propagation of authorizations in distributed database systems
Pierangela Samarati, Paul Ammann, Sushil Jajodia
November 1994 **Proceedings of the 2nd ACM Conference on Computer and communicatio**
Publisher: ACM Press
Full text available: pdf(1.40 MB) Additional Information: full citation, abstract, referen

We consider the propagation of authorizations in distributed database systems. If no constraint then the authorization states at different sites may evolve inconsistently. A standard solution is appear as if they had occurred in some serial order at a single site, perhaps via an atomic comr result in authorization changes ...

5 Cryptography and data security
Dorothy Elizabeth Robling Denning
January 1982 Book
Publisher: Addison-Wesley Longman Publishing Co., Inc.
Full text available: pdf(19.47 MB) Additional Information: full citation, abstract, referen

From the Preface (See Front Matter for full Preface)

Electronic computers have evolved from exiguous experimental enterprises in the 1940s to prol have come to rely on these systems to process and store data, we have also come to wonder a

Data security is the science and study of methods of protecting data in computer and communi

6 A rule-based framework for role-based delegation and revocation
Longhua Zhang, Gail-Joon Ahn, Bei-Tseng Chu
August 2003 **ACM Transactions on Information and System Security (TISSEC)**, Volume 6
Publisher: ACM Press
Full text available: pdf(1.05 MB) Additional Information: full citation, abstract, referen

Delegation is the process whereby an active entity in a distributed environment authorizes anot systems, a user often needs to act on another user's behalf with some subset of his/her rights. requirements with ad-hoc mechanisms by compromising existing disorganized policies or simpl there is a strong need in the large, distrib ...

Keywords: Role, access control, delegation, revocation, rule-based

7 Access control with IBM Tivoli access manager
Günter Karjoth
May 2003 **ACM Transactions on Information and System Security (TISSEC)**, Volume 6
Publisher: ACM Press
Full text available: pdf(367.07 KB) Additional Information: full citation, abstract, referen

Web presence has become a key consideration for the majority of companies and other organiz the Web is increasingly being regarded as an extension of the organization itself, directly integr takes place, security grows in importance. IBM Tivoli Access Manager offers a shared infrastruc technologies that have begun to emerge in the com ...

Keywords: Access control, WWW security, Web servers, authorization management

8 Fast detection of communication patterns in distributed executions
Thomas Kunz, Michiel F. H. Seuren
November 1997 **Proceedings of the 1997 conference of the Centre for Advanced Studies c**
Publisher: IBM Press
Full text available: pdf(4.21 MB) Additional Information: full citation, abstract, referen

Understanding distributed applications is a tedious and difficult task. Visualizations based on pr understanding of the execution of the application. The visualization tool we use is Poet, an ever these diagrams are often very complex and do not provide the user with the desired overview c repeated occurrences of non-trivial commun ...

9 Access control: On the modeling and analysis of obligations
Keith Irwin, Ting Yu, William H. Winsborough
October 2006 **Proceedings of the 13th ACM conference on Computer and communicatio**
Publisher: ACM Press
Full text available: pdf(230.18 KB) Additional Information: full citation, abstract, referen

Traditional security policies largely focus on access control requirements, which specify who car control requirements, the availability of services in many applications often further imposes obl taken by a subject in the future as a condition of getting certain privileges at present. However, policies are concerning the security ...

Keywords: obligations, policy

10 Macintosh human interface guidelines
Apple Computer, Inc.
January 1992 Book
Publisher: Addison-Wesley Publishing Company
Full text available: pdf(37.61 MB) Additional Information: full citation, abstract, referen

Macintosh Human Interface Guidelines describes the way to create products that optimize the i explains the whys and hows of the Macintosh interface in general terms and specific details.

Macintosh Human Interface Guidelines helps you link the philosophy behind the Macintosh inter Examples from a wide range of Macintosh products show good human interface design, includin

11 Limitations of the Kerberos authentication system
S. M. Bellovin, M. Merritt
October 1990 **ACM SIGCOMM Computer Communication Review**, Volume 20 Issue 5
Publisher: ACM Press
Full text available: pdf(1.12 MB) Additional Information: full citation, abstract, citings,

The Kerberos authentication system, a part of MIT's Project Athena, has been adopted by other number of limitations and some weaknesses. Some are due to specifics of the MIT environment discuss a number of such problems, and present solutions to some of them. We also demonstra needed in some cases.

12 A calculus for access control in distributed systems
Martín Abadi, Michael Burrows, Butler Lampson, Gordon Plotkin
September 1993 **ACM Transactions on Programming Languages and Systems (TOPLAS)**, v
Publisher: ACM Press
Full text available: pdf(1.94 MB) Additional Information: full citation, abstract, referen

We study some of the concepts, protocols, and algorithms for access control in distributed syst principal may come to believe that another principal is making a request, either on his own or c

for accesss control lists and theories for deciding whether requests should be granted.

Keywords: cryptographic protocols, cryptography, modal logic

13 Approaches to fault-tolerant and transactional mobile agent execution---an algorithmic vie
Stefan Pleisch, André Schiper
September 2004 **ACM Computing Surveys (CSUR)**, Volume 36 Issue 3
Publisher: ACM Press
Full text available: pdf(946.94 KB) Additional Information: full citation, abstract, referen

Over the past years, mobile agent technology has attracted considerable attention, and a signif develop mobile agent technology, reliability mechanisms such as fault tolerance and transactio field of fault-tolerant and transactional mobile agent execution and thus at guiding the reader t existing approaches. It starts with a discu ...

Keywords: ACID, Byzantine failures, agreement problem, asynchronous system, commit, cras replication, security, transaction

14 Query evaluation techniques for large databases
Goetz Graefe
June 1993 **ACM Computing Surveys (CSUR)**, Volume 25 Issue 2
Publisher: ACM Press
Full text available: pdf(9.37 MB) Additional Information: full citation, abstract, referen

Database management systems will continue to manage large data volumes. Thus, efficient alg sequences will be required to provide acceptable performance. The advent of object-oriented a On the contrary, modern data models exacerbate the problem: In order to manipulate large se systems manipulate simple records, query-processi ...

Keywords: complex query evaluation plans, dynamic query evaluation plans, extensible datab operator model of parallelization, parallel algorithms, relational database systems, set-matchin

15 Secure operating systems: Towards a VMM-based usage control framework for OS kernel
Min Xu, Xuxian Jiang, Ravi Sandhu, Xinwen Zhang
June 2007 **Proceedings of the 12th ACM symposium on Access control models and t**
Publisher: ACM Press
Full text available: pdf(485.61 KB) Additional Information: full citation, abstract, referen

Protecting kernel integrity is one of the fundamental security objectives in building a trustworth approaches and systems have been proposed and developed. However, access control models capture important security requirements such as continuous policy enforcement and mutable p protection mechanisms in these systems reside in the ...

Keywords: UCON, VMM, access control, authorization, kernel integrity, operating system prot

16 UIO: a uniform I/O system interface for distributed systems
David R. Cheriton
January 1987 **ACM Transactions on Computer Systems (TOCS)**, Volume 5 Issue 1
Publisher: ACM Press
Full text available: pdf(3.20 MB) Additional Information: full citation, abstract, referen

A uniform I/O interface allows programs to be written relatively independently of specific I/O s

available in a distributed environment. Ideally, the interface provides this uniform access witho
performance. However, a uniform interface does not arise from careful design of individual syst
paper, the UIO (unifo ...

17 Peer-to-peer infrastructure: Pastiche: making backup cheap and easy
Landon P. Cox, Christopher D. Murray, Brian D. Noble
December 2002 **ACM SIGOPS Operating Systems Review**, Volume 36 Issue SI
Publisher: ACM Press
Full text available: pdf(1.65 MB) Additional Information: full citation, abstract, referen

Backup is cumbersome and expensive. Individual users almost never back up their data, and b
presents *Pastiche*, a simple and inexpensive backup system. Pastiche exploits excess disk capa
costs. Each node minimizes storage overhead by selecting peers that share a significant amoun
peers, and peers with high ove ...

18 Use of nested certificates for efficient, dynamic, and trust preserving public key infrastructu
Albert Levi, M. Ufuk Caglayan, Cetin K. Koc
February 2004 **ACM Transactions on Information and System Security (TISSEC)**, Volume 7
Publisher: ACM Press
Full text available: pdf(532.64 KB) Additional Information: full citation, abstract, referen

Certification is a common mechanism for authentic public key distribution. In order to obtain a
network of certificates, which is called public key infrastructure (PKI), and verify the certificates
Nested certification is a novel methodology for efficient certificate path verification. Basic idea i
other certifica ...

Keywords: Digital certificates, key management, nested certificates, public key infrastructure

19 Distributed operating systems
Andrew S. Tanenbaum, Robbert Van Renesse
December 1985 **ACM Computing Surveys (CSUR)**, Volume 17 Issue 4
Publisher: ACM Press
Full text available: pdf(5.49 MB) Additional Information: full citation, abstract, referen

Distributed operating systems have many aspects in common with centralized ones, but they al
introduction to distributed operating systems, and especially to current university research abo
operating system and how it is distinguished from a computer network, various key design issu
projects are examined in some detail ...

20 Access management for distributed systems: Role-based cascaded delegation
Roberto Tamassia, Danfeng Yao, William H. Winsborough
June 2004 **Proceedings of the ninth ACM symposium on Access control models and t**
Publisher: ACM Press
Full text available: pdf(218.61 KB) Additional Information: full citation, abstract, referen

We propose *role-based cascaded delegation*, a model for delegation of authority in decentralize
cascaded delegation combines the advantages ofrole-based trust management with those of ca
implementation of role-based cascaded delegation using Hierarchical Certificate-Based Encrypti
long role-based delegation chain is captur ...

Keywords: RBAC, access control, delegation, trust management

Results 1 - 20 of 200 Result page: **1** 2 3 4 5 6 7 8 9

VMware Ex. 1002
Page 34 of 257

```
Set     Items   Description
S1     327854   (COMPUTER?(2N)SYSTEM? ? OR NETWORK? OR DISTRIBUT? OR ETHER-
             NET? OR INTERNET OR INTRANET? OR LAN OR LANS OR WAN OR WANS OR
              WLAN? ? OR VLAN? ?)(7N)(CONTROL? OR REGULAT? OR DIRECT? OR M-
             ANAG? OR ADMINISTRAT? OR SUSTAIN? OR ORDER??? OR MAINTAIN? OR
             SUPERVIS???)
S2     248932   (PROTECT? OR SECUR? OR GUARD? OR FORTIF? OR SHIELD? OR ENF-
             ORC?)(3N)(ACCESS? OR ENTRY OR ENTRIE? ? OR USE??? OR UTILI? OR
              USING)
S3     195926   (ORDER?()SET? ? OR SEQUEN? OR PATTERN? OR ORDER?)(5N)(LEVE-
             L? OR STEP? ? OR STAGE? OR TIER?? ? OR OPERATION? OR FUNCTION?
              OR COMMAND?)
S4      26666   S3(5N)(TIME? ? OR TIMING OR TEMPORAL? OR CLOCK? OR DURATIO-
             N? OR EVENT? OR SCHEDUL? OR OCCASION? OR DAY? ? OR HOUR? ? OR
             MINUTE? ? OR SECOND? ? OR PERIOD?)
S5      33021   S3:S4(5N)(SECOND? OR COUPLE OR 2ND OR 2 OR DUAL?? OR TWICE
             OR ANOTHER? OR TWO OR DIFFERENT OR PAIR OR MORE(2N)ONE OR ADD-
             ITIONAL)
S6       8606   S4:S5(5N)(PERFORM? OR EXECUT? OR IMPLEMENT? OR OPERATE? ? -
             OR OPERATING OR ENACT? OR HANDL? OR (CARRY? OR CARRIE? ?)()OUT
              OR COMPLET? OR ENABL? OR ALLOW?)
S7         25   S6 AND S2 AND S1
File 350:Derwent WPIX 1963-2007/UD=200752
         (c) 2007 The Thomson Corporation
File 347:JAPIO Dec 1976-2007/Mar(Updated 070809)
         (c) 2007 JPO & JAPIO
```

7/69,K/2 (Item 2 from file: 350)
DIALOG(R)File 350:Derwent WPIX
(c) 2007 The Thomson Corporation. All rts. reserv.

0015035617 - Drawing available
WPI ACC NO: 2005-383609/200539
XRPX Acc No: N2005-310943
Trail/path protection function enhancement method in synchronous optical network, involves mapping content of bytes of section overhead into path overhead bytes at low/high order level, for handling protective resources
Patent Assignee: ALCATEL (COGE)
Inventor: CAZZANIGA G; SESTITO V
Patent Family (3 patents, 33 countries)

Patent Number	Kind	Date	Application Number	Kind	Date	Update	
US 20050099941	A1	20050512	US 2004822667	A	20040413	200539	B
EP 1531566	A1	20050518	EP 2003292866	A	20031112	200539	E
CN 1617476	A	20050518	CN 200410042594	A	20040525	200558	E

Priority Applications (no., kind, date): EP 2003292866 A 20031112

Patent Details

Number	Kind	Lan	Pg	Dwg	Filing Notes
US 20050099941	A1	EN	16	7	
EP 1531566	A1	EN			

Regional Designated States,Original: AL AT BE BG CH CY CZ DE DK EE ES FI FR GB GR HU IE IT LI LT LU LV MC MK NL PT RO SE SI SK TR

Alerting Abstract US A1
NOVELTY - The content of bytes of section overhead are mapped in a linear multiplex section protection (MSP) N:1 trail protection function by protocol exchange, into path overhead (POH) bytes at low order and/or high order level, so as to allow handling of multiple protective resources shared among different working resources in both end-to-end handling and intermediate handling.
DESCRIPTION - INDEPENDENT CLAIMS are also included for the following:

1.network element;

2.trail/path protection function enhancement program; and

3.computer readable medium storing trail/path protection function enhancement program.

USE - For enhancing trail/path **protection** function in **synchronous** optical network (SONET) and synchronous digital hierarchy (SDH) network.
ADVANTAGE - Enhances the features of standardized protection scheme. Eliminates requirement of operating system application to the operator, thereby improving traffic **management** reliability in **network** .
DESCRIPTION OF DRAWINGS - The figure shows the schematic diagram of the network elements.
NEa,NEb network elements

Title Terms/Index Terms/Additional Words: TRAILING; PATH; PROTECT; FUNCTION ; ENHANCE; METHOD; SYNCHRONOUS; OPTICAL; NETWORK; MAP; CONTENT; BYTE; SECTION; OVERHEAD; LOW; HIGH; ORDER; LEVEL; HANDLE; RESOURCE

Class Codes
International Classification (Main): G01R-031/08
International Classification (+ Attributes)

IPC + Level Value Position Status Version

H04J-0003/14	A	I	R	20060101
H04Q-0011/04	A	N	R	20060101
H04J-0003/14	C	I	R	20060101
H04Q-0011/04	C	N	R	20060101

US Classification, Issued: 370907000, 370228000

File Segment: EPI;
DWPI Class: T01; W01
Manual Codes (EPI/S-X): T01-F02C2; T01-N02B2C; T01-S03; W01-A06A1; W01-A06C1; W01-A06E

Alerting Abstract ...USE - For enhancing trail/path **protection** function in **synchronous** optical network (SONET) and synchronous digital hierarchy (SDH) network...

...standardized protection scheme. Eliminates requirement of operating system application to the operator, thereby improving traffic **management** reliability in **network** .

Original Publication Data by Authority

Original Abstracts:
...protocol exchange into POH bytes of the path overhead in SDH or SONET, at Low **Order** and/or High **Order** **level** , so as **to** **allow** the **handling** of **more** than **one** protecting **resource** shared **among** different working resources, both in end-to-end handling and in intermediate handling...

...in SDH or SONET, at Low Order and/or High Order level, so as to **allow** the **handling** of **more** than **one** protecting resource shared among **different** **working** resources, both in **end - to** -end **handling** and **in** intermediate **handling**. >

Claims:
...protocol exchange into POH bytes of the path overhead in SDH or SONET, at Low **Order** and/or High **Order** **level** , so as **to** **allow** the **handling** of **more** than **one** protecting **resource** shared **among** different working resources, both in end-to-end handling and in intermediate handling...

...protocol exchange into POH bytes of the path overhead in SDH or SONET, at Low **Order** and/or High **Order** **level** , so as to **allow** the **handling** of more than one protecting resource shared among **different** working resources, both **in** end-to-end **handling** **and** in intermediate **handling**. >

7/69,K/5 (Item 5 from file: 350)
DIALOG(R)File 350:Derwent WPIX
(c) 2007 The Thomson Corporation. All rts. reserv.

0014416207 - Drawing available
WPI ACC NO: 2004-606295/200459
Related WPI Acc No: 2004-634023; 2004-634025
XRPX Acc No: N2004-479628

Coprocessor e.g. graphics processing unit, task scheduling method, involves processing tasks by coprocessor in order indicated by run list, where coprocessor switches to next task in event of occurrence of any switching event

Patent Assignee: GOSSALIA A B (GOSS-I); MICROSOFT CORP (MICT); PRONOVOST S (PRON-I)
Inventor: GOSALIA A B; GOSSALIA A B; LANGLEY B; LANGLEY B L; NAGASE H; PRONOVOST S

Patent Family (9 patents, 35 countries)

Patent Number	Kind	Date	Application Number	Kind	Date	Update	
EP 1450258	A2	20040825	EP 20043544	A	20040217	200459	B
JP 2004252983	A	20040909	JP 200442173	A	20040218	200459	E
US 20040187122	A1	20040923	US 2003448399	P	20030218	200463	E
			US 2003448400	P	20030218		
			US 2003448402	P	20030218		
			US 2003474513	P	20030529		
			US 2004763778	A	20040122		
US 20040187135	A1	20040923	US 2003448399	P	20030218	200463	E
			US 2003448400	P	20030218		
			US 2003448402	P	20030218		
			US 2004777797	A	20040212		
US 20040231000	A1	20041118	US 2003448400	P	20030218	200477	E
			US 2004779272	A	20040213		
US 20050168472	A1	20050804	US 2003448399	P	20030218	200552	E
			US 2003748362	A	20031230		
			US 200589856	A	20050325		
CN 1609812	A	20050427	CN 200410039767	A	20040213	200558	E
IN 200400206	I1	20060331	IN 2004DE206	A	20040213	200625	NCE
IN 200400207	I1	20060303	IN 2004DE207	A	20040213	200639	E

Priority Applications (no., kind, date): US 200589856 A 20050325; US 2004779272 A 20040213; IN 2004DE206 A 20040213; US 2004777797 A 20040212; US 2003748362 A 20031230; US 2003474513 P 20030529; US 2003448399 P 20030218; US 2003448400 P 20030218; US 2003448402 P 20030218; US 2004763778 A 20040122

Patent Details

Number	Kind	Lan	Pg	Dwg	Filing Notes
EP 1450258	A2	EN	64	26	
Regional Designated States,Original: AL AT BE BG CH CY CZ DE DK EE ES FI FR GB GR HU IE IT LI LT LU LV MC MK NL PT RO SE SI SK TR					
JP 2004252983	A	JA	145		
US 20040187122	A1	EN			Related to Provisional US 2003448399
					Related to Provisional US 2003448400
					Related to Provisional US 2003448402
					Related to Provisional US 2003474513
US 20040187135	A1	EN			Related to Provisional US 2003448399
					Related to Provisional US 2003448400
					Related to Provisional US 2003448402
US 20040231000	A1	EN			Related to Provisional US 2003448400
US 20050168472	A1	EN			Related to Provisional US 2003448399
					Continuation of application US

2003748362
IN 200400206 I1 EN
IN 200400207 I1 EN

Alerting Abstract EP A2
NOVELTY - The method involves generating a run list by a CPU, where the list comprises a list of tasks to be processed by a coprocessor. The run list is delivered to a scheduler process that prepares the tasks on the run list. The tasks are processed by the coprocessor in an order indicated by the run list. The coprocessor switches to a next task on the run list, when a switching event e.g. page fault, occurs while processing a task.
DESCRIPTION - INDEPENDENT CLAIMS are also included for the following:

1. a computer readable medium comprising computer executable instructions for carrying out a method for scheduling task for processing in a coprocessor

2. a modulated data signal carrying computer executable instructions for use in performing a method for scheduling task for processing in a coprocessor

3. a graphics processing unit for performing a method of scheduling tasks for processing in a coprocessor.

USE - Used in a computer system for scheduling tasks that are processed in a coprocessor e.g. a graphics processing unit that performs three-dimensional graphics calculation to support application e.g. games and computer aided design.
ADVANTAGE - The method provides the run list and allows the coprocessor to switch immediately from one task to the next, on the occurrence of a switching event, without waiting for CPU intervention, thus providing the CPU with more processing time for other functions and enhancing coprocessor efficiency and power.
DESCRIPTION OF DRAWINGS - The drawing shows a scheduling model.

Title Terms/Index Terms/Additional Words: GRAPHIC; PROCESS; UNIT; TASK; SCHEDULE; METHOD; ORDER; INDICATE; RUN; LIST; SWITCH; EVENT; OCCUR

Class Codes
International Classification (Main): G06F, G06F-009/38, G09G-005/14
(Additional/Secondary): G06T-001/20, G09G-005/393, G06F-009/46
International Classification (+ Attributes)

IPC + Level Value Position Status Version				
G06F-0009/46	A	I	R	20060101
G06F-0009/48	A	I	R	20060101
G06F-0009/50	A	I	R	20060101
H04N-0007/16	A	I	R	20060101
H04N-0007/173	A	I	R	20060101
G06F-0009/46	C	I	R	20060101
H04N-0007/16	C	I	R	20060101
H04N-0007/173	C	I	R	20060101

US Classification, Issued: 718100000, 718104000, 725132000, 725133000, 725140000, 725141000, 725152000, 345543000

File Segment: EngPI; EPI;
DWPI Class: T01; P85
Manual Codes (EPI/S-X): T01-C04D; T01-M02B; T01-S03

Original Publication Data by Authority

Original Abstracts:

...any one or more of (1) executing rendering commands sent to the coprocessor in a **different order than** they were **submitted** by **applications** ; (**2**) preempting the coprocessor during **scheduling of** non-interruptible hardware; (3) **allowing** user mode drivers to build work items using command buffers in a way that **does** not compromise **security** ; (4) preparing DMA **buffers** for execution while the coprocessor is busy executing a previously prepared DMA buffer; (5) resuming...

...in a computer environment having a main processing unit for executing an operating system and **an application** , a **system** memory, and **a** graphics processing unit having an aperture that maps, in a tiled manner, between a portion...

7/69,K/6 (Item 6 from file: 350)
DIALOG(R)File 350:Derwent WPIX
(c) 2007 The Thomson Corporation. All rts. reserv.

0013999657 - Drawing available
WPI ACC NO: 2004-180864/200417
XRPX Acc No: N2004-143794
Device for copy-protected distribution of electronic documents via public electronic data network e.g. the internet, with time-limited access to reconstruction server for reconstruction of encrypted document
Patent Assignee: BRAINSHIELD TECHNOLOGIES INC (BRAI-N)
Inventor: WITTKOETTER E; WITTKOTTER E
Patent Family (4 patents, 100 countries)

Patent Number	Kind	Date	Application Number	Kind	Date	Update	
WO 2004015952	A2	20040219	WO 2003EP8606	A	20030804	200417	B
DE 10335943	A1	20040603	DE 10335943	A	20030804	200436	E
AU 2003266962	A1	20040225	AU 2003266962	A	20030804	200456	E
US 20040181688	A1	20040916	US 2003635798	A	20030805	200461	E

Priority Applications (no., kind, date): DE 10236061 A 20020806

Patent Details

Number	Kind	Lan	Pg	Dwg	Filing Notes
WO 2004015952	A2	DE	32	2	

National Designated States,Original: AE AG AL AM AT AU AZ BA BB BG BR BY BZ CA CH CN CO CR CU CZ DK DM DZ EC EE ES FI GB GD GE GH GM HR HU ID IL IN IS JP KE KG KP KR KZ LC LK LR LS LT LU LV MA MD MG MK MN MW MX MZ NO NZ OM PH PL PT RO RU SC SD SE SG SK SL TJ TM TN TR TT TZ UA UG US UZ VC VN YU ZA ZM ZW
Regional Designated States,Original: AT BE BG CH CY CZ DE DK EA EE ES FI FR GB GH GM GR HU IE IT KE LS LU MC MW MZ NL OA PT RO SD SE SI SK SL SZ TR TZ UG ZM ZW
AU 2003266962 A1 EN Based on OPI patent WO 2004015952

Alerting Abstract WO A2
NOVELTY - The device has a number of subscriber terminals (10), each assigned to a user, configured for loading access of an electronic document via the electronic data network, a number of loading accesses carried out for associated electronic file sections, at least one loading access effected from a different subscriber terminal assigned to a different user, with electronic operational sequence instruction data provided by an instruction data server unit (24) required for performing the loading accesses. The received file sections are encrypted according to the operational sequence instruction data to prevent use of the electronic document before reconstruction via a reconstruction server unit (30), coupled for a limited time access to a decryption unit (16,18) within the subscriber terminal.
DESCRIPTION - An INDEPENDENT CLAIM for a method for copy-protected distribution of electronic documents via a public electronic data network is also included.
USE - The device is **used** for copy- **protected** distribution of electronic documents to subscriber terminals connected to a public electronic data network, e.g. the internet.
ADVANTAGE - Device protects distributed electronic documents from being read by unauthorized network users.
DESCRIPTION OF DRAWINGS - The figure shows a schematic block circuit diagram of a device for copy-protected distribution of electronic documents via electronic data network. (Drawing includes non-English language text).
10 Subscriber terminals
14 Publication unit

16,18 Decryption unit
24 Instruction data server unit
30 Reconstruction server unit

Title Terms/Index Terms/Additional Words: DEVICE; COPY; PROTECT; DISTRIBUTE ; ELECTRONIC; DOCUMENT; PUBLIC; DATA; NETWORK; TIME; LIMIT; ACCESS; RECONSTRUCT; SERVE; ENCRYPTION

Class Codes

International Classification (Main): H04L-012/22, H04L-029/06, H04L-009/00 (Additional/Secondary): H04L-009/32
US Classification, Issued: 713201000

File Segment: EPI;
DWPI Class: T01
Manual Codes (EPI/S-X): T01-N01D2; T01-N02B1

Alerting Abstract ...USE - The device is **used** for copy- **protected** distribution of electronic documents to subscriber terminals connected to a public electronic data network, e...

Original Publication Data by Authority

Original Abstracts:

...of electronic documents of a predetermined document data structure in a publicly accessible electronic data **network** , particularly **the** Internet. Said device comprises: a number of subscriber terminal units (10), which are at least...

...to carry out the number of loading accesses, the subscriber terminal units obtain electronic operational **sequence** instruction **data** , **which** are **created** **in** a document-specific and/or subscriber-specific manner, from an instruction data unit (24), particularly...and configured for combining the encrypted form with a reconstruction file in order to generate **the** electronic document **for** display by the display unit in an unencrypted form that can be used by the....

Claims:

...and that represent an encrypted form of said electronic document, at least one of said **downloads** **being** **from** said second computer and at least one of said downloads being from said third computer...

7/69,K/7 (Item 7 from file: 350)
DIALOG(R)File 350:Derwent WPIX
(c) 2007 The Thomson Corporation. All rts. reserv.

0013865161 - Drawing available
WPI ACC NO: 2004-043742/200404
Related WPI Acc No: 2005-423933; 2006-510379
XRPX Acc No: N2004-035314
Hardware processor for Internet **protocol based storage** network **appliance, provides remote** direct **memory access capability on IP and** Ethernet network **, using transmission** control **protocol, STCP and UDP protocol**
Patent Assignee: PANDYA A (PAND-I); PANDYA A A (PAND-I)
Inventor: PANDYA A; PANDYA A A
Patent Family (13 patents, 99 countries)

Patent Number	Kind	Date	Application Number	Kind	Date	Update	
WO 2003104943	A2	20031218	WO 2003US18386	A	20030610	200404	B
US 20040010545	A1	20040115	US 2002388407	P	20020611	200406	E
			US 2003458855	A	20030610		
US 20040010612	A1	20040115	US 2002388407	P	20020611	200406	E
			US 2003459674	A	20030610		
US 20040030757	A1	20040212	US 2002388407	P	20020611	200412	E
			US 2003459297	A	20030610		
US 20040030770	A1	20040212	US 2002388407	P	20020611	200412	E
			US 2003459350	A	20030610		
US 20040030806	A1	20040212	US 2002388407	P	20020611	200412	E
			US 2003459019	A	20030610		
US 20040037299	A1	20040226	US 2002388407	P	20020611	200416	E
			US 2003458844	A	20030610		
US 20040037319	A1	20040226	US 2002388407	P	20020611	200416	E
			US 2003459349	A	20030610		
AU 2003251492	A1	20031222	AU 2003251492	A	20030610	200445	E
US 20040165588	A1	20040826	US 2002388407	P	20020611	200457	E
			US 2003458844	A	20030610		
			US 2003458855	A	20030610		
			US 2003459019	A	20030610		
			US 2003459297	A	20030610		
			US 2003459349	A	20030610		
			US 2003459350	A	20030610		
			US 2003459674	A	20030610		
			WO 2003US18386	A	20030610		
			US 2004783890	A	20040220		
US 20040210320	A1	20041021	US 2002388407	P	20020611	200470	E
			US 2003458844	A	20030610		
			US 2003458855	A	20030610		
			US 2003459019	A	20030610		
			US 2003459297	A	20030610		
			US 2003459349	A	20030610		
			US 2003459350	A	20030610		
			US 2003459674	A	20030610		
			WO 2003US18386	A	20030610		
			US 2004783890	A	20040220		
			US 2004845345	A	20040512		
EP 1573454	A2	20050914	EP 2003757485	A	20030610	200560	E
			WO 2003US18386	A	20030610		
JP 2006516054	W	20060615	WO 2003US18386	A	20030610	200639	E
			JP 2004511951	A	20030610		

Priority Applications (no., kind, date): US 2004845345 A 20040512; US 2004783890 A 20040220; US 2003459674 A 20030610; US 2003459350 A

20030610; US 2003459349 A 20030610; US 2003459297 A 20030610; US 2003459019 A 20030610; US 2003458855 A 20030610; US 2003458844 A 20030610; WO 2003US18386 A 20030610; US 2002388407 P 20020611

Patent Details

Number	Kind	Lan	Pg	Dwg	Filing Notes
WO 2003104943	A2	EN	232	52	

National Designated States,Original: AE AG AL AM AT AU AZ BA BB BG BR BY BZ CA CH CN CO CR CU CZ DE DK DM DZ EC EE ES FI GB GD GE GH GM HR HU ID IL IN IS JP KE KG KP KR KZ LC LK LR LS LT LU LV MA MD MG MK MN MW MX MZ NO NZ OM PH PL PT RO RU SC SD SE SG SK SL TJ TM TR TT TZ UA UG UZ VN YU ZA ZM ZW

Regional Designated States,Original: AT BE BG CH CY CZ DE DK EA EE ES FI FR GB GH GM GR HU IE IT KE LS LU MC MW MZ NL OA PT RO SD SE SI SK SL SZ TR TZ UG ZM ZW

US 20040010545	A1	EN			Related to Provisional US 2002388407
US 20040010612	A1	EN			Related to Provisional US 2002388407
US 20040030757	A1	EN			Related to Provisional US 2002388407
US 20040030770	A1	EN			Related to Provisional US 2002388407
US 20040030806	A1	EN			Related to Provisional US 2002388407
US 20040037299	A1	EN			Related to Provisional US 2002388407
US 20040037319	A1	EN			Related to Provisional US 2002388407
AU 2003251492	A1	EN			Based on OPI patent WO 2003104943
US 20040165588	A1	EN			Related to Provisional US 2002388407
					C-I-P of application US 2003458844
					C-I-P of application US 2003458855
					C-I-P of application US 2003459019
					C-I-P of application US 2003459297
					C-I-P of application US 2003459349
					C-I-P of application US 2003459350
					C-I-P of application US 2003459674
					C-I-P of application WO 2003US18386
US 20040210320	A1	EN			Related to Provisional US 2002388407
					C-I-P of application US 2003458844
					C-I-P of application US 2003458855
					C-I-P of application US 2003459019
					C-I-P of application US 2003459297
					C-I-P of application US 2003459349
					C-I-P of application US 2003459350
					C-I-P of application US 2003459674
					C-I-P of application WO 2003US18386
					C-I-P of application US 2004783890
EP 1573454	A2	EN			PCT Application WO 2003US18386
					Based on OPI patent WO 2003104943

Regional Designated States,Original: AL AT BE BG CH CY CZ DE DK EE ES FI FR GB GR HU IE IT LI LT LU LV MC MK NL PT RO SE SI SK TR

JP 2006516054	W	JA	64		PCT Application WO 2003US18386
					Based on OPI patent WO 2003104943

Alerting Abstract WO A2

NOVELTY - The hardware processor provides remote **direct** memory access capability on **Internet** protocol (IP) **network** and **Ethernet network** using transmission **control** protocol (TCP), STCP and UDP protocol.

DESCRIPTION - INDEPENDENT CLAIMS are also included for the following:

1.switching system;

2.network appliance;

3.chip set;

4. hardware implemented ISCSI/IP storage、controller ;

5.host processor;

6.host;

7.multi-port hardware processor;

8.integrated circuit hardware processor;

9.remote direct memory access operating method;

10.iSCSI stack;

11.TCP/IP stack;

12.IP processor;

13.multiprocessor system;

14.TCP/IP processor engine;

15.IP storage processor engine;

16.TCP/IP processor;

17.hardware implemented IP network application processor;

18.transport level RDMA function execution method;

19.peer system;

20.cluster of server;

21.CPU;

22.packet scheduler and sequencer;

23.classification resource;

24.Internet protocol packet scheduling and sequencing method;

25.hardware data processing classifier engine;

26.hardware classifier engine method;

27.storage flow and RDMA controller ;

28. commands scheduling and sequencing method;

29.RDMA method;

30.data processing apparatus;

31.session index;

32.session cache and memory complex;

33.session memory;

34.transport layer RDMA protocol execution method;

35.server;

36.hardware processor manufacturing method;

37.IP storage area network switching system line card;

38.gate controller ;

39.storage area network management appliance; and

40. network .

USE - Hardware processor for Internet protocol (IP) based storage network **appliance** (claimed) and switching system (claimed). Also used **in network management** , bandwidth **management** , **firewall and** security applications.

ADVANTAGE - Reduces TCP/IP protocol stack overhead sharply and enables high line rate storage and data transport solution based on IP. Provides features to **terminate TCP** traffic **carrying** the storage and data payload. Thereby eliminates the TCP/IP networking stack overhead. Allows packets to pass through from input to output with minimal latency. Enables high line rate storage or data traffic carried over IP.

DESCRIPTION OF DRAWINGS - The figure shows a block diagram of the IP network application processor.

Title Terms/Index Terms/Additional Words: HARDWARE; PROCESSOR; PROTOCOL; BASED; STORAGE; NETWORK; APPLIANCE; REMOTE; DIRECT; MEMORY; ACCESS; CAPABLE; IP; TRANSMISSION; CONTROL

Class Codes

International Classification (+ Attributes)

IPC + Level Value Position Status Version						
G05B-0015/00	A	I		R	20060101
G06F-0013/10	A	I	F	B	20060101
G06F-0015/173	A	I		R	20060101
G06F-0015/177	A	I		R	20060101
H04L-0012/56	A	I		R	20060101
H04L-0029/06	A	I		R	20060101
H04L-0029/08	A	I		R	20060101
G05B-0015/00	C	I		R	20060101
G06F-0015/16	C	I		R	20060101
H04L-0012/56	C	I		R	20060101
H04L-0029/06	C	I		R	20060101
H04L-0029/08	C	I		R	20060101

US Classification, Issued: 709203000, 709230000, 709213000, 709217000, 709223000, 709220000, 709250000, 709212000, 370401000, 370395500, 370469000, 370395520, 370389000, 700001000

File Segment: EPI;
DWPI Class: T01; W01
Manual Codes (EPI/S-X): T01-F05E; T01-H01B1A; T01-N02A1; T01-N02A3C; W01-A03B; W01-A06E1; W01-A06G2; W01-A06G5E

Hardware processor for Internet **protocol based storage** network **appliance, provides remote** direct **memory access capability on IP and** Ethernet network , **using transmission** control **protocol, STCP and UDP protocol**

Alerting Abstract ...NOVELTY - The hardware processor provides remote

direct memory access capability on **Internet** protocol (IP) **network** and **Ethernet** **network** using transmission **control** protocol (TCP), STCP and UDP protocol....switching system; network appliance; chip set; **hardware** implemented ISCSI/IP storage **controller** ; host processor; host; multi-port hardware processor; integrated circuit hardware processor; remote direct memory access...

...classification resource; Internet protocol packet scheduling and sequencing method; hardware data processing classifier engine; hardware **classifier** engine method; storage flow and **RDMA** **controller** ; **commands** **scheduling** and **sequencing** method; RDMA method; data processing apparatus; session index; session cache and memory complex; session memory; transport layer RDMA protocol execution method; server; hardware processor manufacturing method; IP storage area **network** switching system line card; gate **controller** ; storage area **network** **management** appliance; and **network** .

...

...USE - Hardware processor for Internet protocol (IP) based storage network **appliance** (claimed) and switching system (claimed). Also used **in** **network** **management** , bandwidth **management** , **firewall** **and** security applications.

...

...enables high line rate storage and data transport solution based on IP. Provides features to **terminate** **TCP** traffic **carrying** the storage and data payload. Thereby eliminates the TCP/IP networking stack overhead. Allows packets

Original Publication Data by Authority

Original Abstracts:
...Une architecture fournit des possibilites de transport et de traitement de paquets de Protocole **Internet** (**IP**) depuis la couche 2 par la terminaison totale TCP/IP et l'inspection complete de...
Claims:
...comprising a hardware processor providing remote direct memory access capability for enabling data transfer using **TCP** over IP **networks** , said processor being programmable and sending and receiving data packets' also having identification information based...

...What is claimed is:1. A hardware processor providing remote **direct** memory access capability on an IP **network** and using a TCP, SCTP or UDP protocol, or a combination of **any** of the foregoing, over IP **networks** .

...

...packets;b. a session memory for storing IP session information;c. at least one memory **controller** for **controlling** memory accesses;d. at least one media interface for coupling to at least one network...a peer, memory regions reserved for RDMA;l. recording said memory regions reserved for RDMA **in** an RDMA database and **maintaining** said database;m. executing operations provided by RDMA capability;n. executing security management functions;o...

...I claim:1. A **security** system comprising a **network** ,said network comprising one or more networked systems of one or more types,a plurality...

...said hardware processor comprisinga protocol processing engine to do transport layer protocol processing; or **a** programmable rule processing engine to analyze **network** traffic for rule matching or **taking** actions on matched rules or a combination thereof; ora security processing engine to do encryption, decryption, authorization or authentication or a combination thereof **using** standard or proprietary **security** protocols; ora packet classification engine to classify the network traffic; ora packet processing

7/69,K/8 (Item 8 from file: 350)
DIALOG(R)File 350:Derwent WPIX
(c) 2007 The Thomson Corporation. All rts. reserv.

0013706078 - Drawing available
WPI ACC NO: 2003-803229/200375
XRPX Acc No: N2003-643888
Computer-based maintenance resource system in industrial facility, has operation interface which receives operation data for scheduling and assigning resources to execute job plan
Patent Assignee: FRISINA F (FRIS-I)
Inventor: FRISINA F
Patent Family (1 patents, 1 countries)

Patent Number	Kind	Date	Application Number	Kind	Date	Update	
US 20030187865	A1	20031002	US 2002368022	P	20020327	200375	B
			US 2002147344	A	20020515		

Priority Applications (no., kind, date): US 2002368022 P 20020327; US 2002147344 A 20020515

Patent Details

Number	Kind	Lan	Pg	Dwg	Filing Notes
US 20030187865	A1	EN	42	28	Related to Provisional US 2002368022

Alerting Abstract US A1

NOVELTY - The system executes a job planning software for producing job plan or work orders, based on the information supplied by a user. An operation interface receives operation data related to generated job plan or work order, for scheduling and assigning resources to execute job plan or protection request.

DESCRIPTION - INDEPENDENT CLAIMS are also included for the following:

1.job plan preparation method;

2.computer generated work order approved method.

USE - For maintaining resources in industrial or commercial facility using computer.

ADVANTAGE - The operation input and requirement are fully integrated with maintenance resource allocation and planning requirements by using operation interface, hence work orders are issued only after achieving necessary approvals and operation input.

DESCRIPTION OF DRAWINGS - The figure shows the block diagram of the computer-based maintenance resource system.

1 computer
4 standard database
5 work order database
6 integration software component
8 operation requirement database

Title Terms/Index Terms/Additional Words: COMPUTER; BASED; MAINTAIN; RESOURCE; SYSTEM; INDUSTRIAL; FACILITY; OPERATE; INTERFACE; RECEIVE; DATA ; SCHEDULE; ASSIGN; EXECUTE; JOB; PLAN

Class Codes
International Classification (Main): G06F-007/00
US Classification, Issued: 707102000

File Segment: EPI;
DWPI Class: T01

Manual Codes (EPI/S-X): T01-J05A2B; T01-J05B4P; T01-N01A2

Original Publication Data by Authority

Original Abstracts:
A computer based maintenance resource **management system** has an **operations** software component with access to historical operations requirements such that job plans for the current...
Claims:
...program, and means for integrating the operations data into the job plan and/or work **order** for use in **scheduling and** assigning resources to **execute** the job plan and/or **protection request**.>

7/69,K/9 (Item 9 from file: 350)
DIALOG(R)File 350:Derwent WPIX
(c) 2007 The Thomson Corporation. All rts. reserv.

0013565781 - Drawing available
WPI ACC NO: 2003-660043/200362
Related WPI Acc No: 2003-660044; 2007-024009
XRPX Acc No: N2003-526333
Data network management **and service provider using command line interface framework, transmits command sequences to corresponding** managed **data** network **entity, for execution of command line interface actions in entity**
Patent Assignee: ALCATEL CANADA INC (COGE); CHAN D W (CHAN-I); KATZ F (KATZ-I); LANDRY K E D (LAND-I); MURRAY C (MURR-I); NGO C N (NGOC-I); ZABIHI A (ZABI-I)
Inventor: CHAN D W; KATZ F; LANDRY K E D; MURRAY C; MURRAY C W; NGO C N; ZABIHI A
Patent Family (7 patents, 32 countries)

Patent Number	Kind	Date	Application Number	Kind	Date	Update	
US 20030115304	A1	20030619	US 2002115900	A	20020405	200362	B
CA 2365436	A1	20030619	CA 2365436	A	20011219	200362	E
EP 1322066	A2	20030625	EP 2002293097	A	20021213	200362	E
US 7113989	B2	20060926	US 2002115900	A	20020405	200663	E
EP 1322066	B1	20061220	EP 2002293097	A	20021213	200702	E
DE 60216885	E	20070201	DE 60216885	A	20021213	200722	E
			EP 2002293097	A	20021213		
DE 60216885	T2	20070705	DE 60216885	A	20021213	200744	E
			EP 2002293097	A	20021213		

Priority Applications (no., kind, date): CA 2365436 A 20011219; US 2002115900 A 20020405

Patent Details

Number	Kind	Lan	Pg	Dwg	Filing Notes
US 20030115304	A1	EN	13	7	
CA 2365436	A1	EN			
EP 1322066	A2	EN			
Regional Designated States,Original: AL AT BE BG CH CY CZ DE DK EE ES FI FR GB GR IE IT LI LT LU LV MC MK NL PT RO SE SI SK TR					
EP 1322066	B1	EN			
Regional Designated States,Original: DE ES FR GB IT					
DE 60216885	E	DE			Application EP 2002293097
					Based on OPI patent EP 1322066
DE 60216885	T2	DE			Application EP 2002293097
					Based on OPI patent EP 1322066

Alerting Abstract US A1

NOVELTY - A command line interface (CLI) processor (520) processes the CLI dictionary entries holding vocabulary and grammar specifications of commands used in interacting with at least one **managed** data **network** entity (510), on receiving request for CLI actions to be performed from a managed object server (MOS) (200). A communication module (540) transmits each CLI command sequence to corresponding network entity, for execution.

DESCRIPTION - INDEPENDENT CLAIMS are also included for the following:

1.method of interacting with managed data network entity; and

2.method of providing dictionary of CLI commands.

USE - For **managing** data **networks** such as wireless local area **network**

(LAN) comprising data switching equipments, routers, bridge, access nodes providing multiplexing function, remote access servers (RAS), distribution nodes providing demultiplexing function, customer premise equipment (CPE) and for controlling software applications such as inventory reporting, configuration **management** , statistics gathering, performance reporting, fault **management** , **network surveillance, service provisioning, billing and accounting and security enforcement using** command line interface framework.

ADVANTAGE - Provides automatic entry of CLI command in dictionary and support for multi-vendor equipment by using multiple CLI command vocabularies and dictionaries. Reduces data **network** entity **management costs and time and improves development and maintenance of the network management** and service provisioning solution.

DESCRIPTION OF DRAWINGS - The figure shows the block diagram of the data **network management** and service provisioning command line interface framework.

200 managed object server
510 **managed** data **network** entity
520 CLI processor
540 communication module

Title Terms/Index Terms/Additional Words: DATA; NETWORK; MANAGEMENT; SERVICE; COMMAND; LINE; INTERFACE; FRAMEWORK; TRANSMIT; SEQUENCE; CORRESPOND; ENTITY; EXECUTE; ACTION

Class Codes

International Classification (+ Attributes)

IPC + Level Value Position Status Version					
G06F-0015/173	A	I	F	B	20060101
H04L-0012/24	A	I		R	20060101
H04L-0012/24	A	I	F	B	20060101
H04L-0012/24	A	I	F		20060101
G06F-0015/16	C	I	F	B	20060101
H04L-0012/24	C	I		R	20060101
H04L-0012/24	C	I	F	B	20060101
H04L-0012/24	C	I			20060101
H04L-0012/24	C	I		B	20060101

US Classification, Issued: 709223000, 709222000, 709224000, 709220000, 709223000, 370241000, 370254000, 707100000

File Segment: EPI;
DWPI Class: T01; W01
Manual Codes (EPI/S-X): T01-F05B; T01-N02A2; W01-A06B5A; W01-A06E

Data network management **and service provider using command line interface framework**, transmits command sequences to corresponding managed **data** network **entity, for execution of command line interface actions in entity**

Alerting Abstract ...entries holding vocabulary and grammar specifications of commands used in interacting with at least one **managed** data **network** entity (510), on receiving request for CLI actions to be performed from a managed object...
...method of interacting with **managed** data **network** entity; and method of providing dictionary of CLI commands...

...USE - For **managing** data **networks** such as wireless local area **network** (LAN) comprising data switching equipments, routers, bridge, access nodes providing multiplexing function, remote access servers...

...function, customer premise equipment (CPE) and for controlling software applications such as inventory reporting, configuration **management** , statistics gathering, performance reporting, fault **management** , **network** surveillance, service provisioning, billing and accounting and **security enforcement** **using** command line interface framework...

...support for multi-vendor equipment by using multiple CLI command vocabularies and dictionaries. Reduces data **network** entity **management** costs and time and improves development and maintenance of the **network management** and service provisioning solution...

...DESCRIPTION OF DRAWINGS - The figure shows the block diagram of the data **network** **management** and service provisioning command line interface framework...
...510 **managed** data **network** entity...

Original Publication Data by Authority

Original Abstracts:
A method of interacting with a **managed** data **network** entity is provided. The method includes a sequence of steps. A change in the operational state of the **managed** data **network** entity is detected. A CLI dictionary entry is retrieved form a CLI dictionary associated with...

...Based on the retrieved CLI dictionary entry, CLI commands are extracted therefrom to configure the **managed** data **network** entity to reflect the detected change in the operational state. A CLI command sequence is...

...the extracted CLI commands. Each CLI command in the command sequence is sent to the **managed** data **network** entity for execution. CLI command responses are monitored. Based on a successful execution of CLI...

...commands in the CLI command sequence are sent for execution. The solution provides automated configuration **management** of data **network** entities from different vendors when SNMP is not a viable option. The automation eliminates manual CLI command entry in providing **network management** and service provisioning solutions, provides support for multi-vendor equipment by processing multiple CLI command vocabulary and grammar specifications in the CLI command dictionary. The solution reduces data **network** entity **management** costs, downtime, and training time for analysts. The advantages are derived from the ability to...

...data network entities with human readable code greatly improving the development and maintenance of the **network** **management** and service provisioning solution...

...A method of interacting with a **managed** data **network** entity is provided. The method includes a sequence of steps. A change in the operational state of the **managed** data **network** entity is detected. A CLI dictionary entry is retrieved form a CLI dictionary associated with...

...Based on the retrieved CLI dictionary entry, CLI commands are extracted therefrom to configure the **managed** data **network** entity to reflect the detected change in the operational state. A CLI command sequence is...

...the extracted CLI commands. Each CLI command in the command sequence is sent to the **managed** data **network** entity for execution. CLI command responses are monitored. Based on a successful execution of CLI...
...commands in the CLI command sequence are sent for execution. The

solution provides automated configuration **management** of data **network** entities from different vendors when SNMP is not a viable option. The automation eliminates manual CLI command entry in providing **network management** and service provisioning solutions, provides support for multi-vendor equipment by processing multiple CLI command vocabulary and grammar specifications in the CLI command dictionary. The solution reduces data **network** entity **management** costs, downtime, and training time for analysts. The advantages are derived from the ability to...

...data network entities with human readable code greatly improving the development and maintenance of the **network** **management** and service provisioning solution...

...A method of interacting with a **managed** data **network** entity is provided. The method includes a sequence of steps. A change in the operational state of the **managed** data **network** entity is detected. A CLI dictionary entry is retrieved form a CLI dictionary associated with...

...Based on the retrieved CLI dictionary entry, CLI commands are extracted therefrom to configure the **managed** data **network** entity to reflect the detected change in the operational state. A CLI command sequence is...
...the extracted CLI commands. Each CLI command in the command sequence is sent to the **managed** data **network** entity for execution. CLI command responses are monitored. Based on a successful execution of CLI...

...commands in the CLI command sequence are sent for execution. The solution provides automated configuration **management** of data **network** entities from different vendors when SNMP is not a viable option. The automation eliminates manual CLI command entry in providing **network management** and service provisioning solutions, provides support for multi-vendor equipment by processing multiple CLI command vocabulary and grammar specifications in the CLI command dictionary. The solution reduces data **network** entity **management** costs, downtime, and training time for analysts. The advantages are derived from the ability to...

...data network entities with human readable code greatly improving the development and maintenance of the **network** **management** and service provisioning solution.
Claims:
Network **management** and service provisioning Command Line Interface (CLI) framework, comprising: a. a processor responsive to...

...holding vocabulary and grammar specifications of a plurality of commands used in interacting with at **least** one **managed** data network entity; and c. a communications module sending in sequence for execution and...

...of commands generated in response to the notification as specified in the plurality of dictionary **entries** **wherein** a network management and service provisioning solution is provided making abstraction of the **at** least **one** managed data network entity...

...A Command Line Interface (CLI) **framework** **for** a network **m**anager (NM) that manages **a** plurality of managed entities **of** a communication network, comprising: a CLI dictionary (530) holding vocabulary and grammar specifications for all...

...sequence of commands required to configure a managed entity that said managed object represents in **response** to **said** **event** and handling **execution** of **said** sequence of commands at said managed entity; anda communications module (540) for transmitting said sequence of commands to

said managed entity for execution, and interpreting results **received** from said managed **entity** , **wherein** a network management and service provisioning solution is provided making abstraction of the type of...

...I/we **claim** : **1** . A network management and service provisioning Command Line Interface (CLI) framework, comprising: a. a processor...

...entries holding vocabulary and grammar specifications of a plurality of commands used in interacting with **at** least **one** managed data network entity; and c. a communications module sending in sequence for execution and...

...of commands generated in response to the notification as specified in the plurality of dictionary **entries** **wherein** a network management and service provisioning solution is provided making abstraction of the **at** least **one** managed data network entity...

...We claim:1. A Command Line Interface (CLI) framework **component** **of** a Network Management System (**NMS**), the NMS managing a plurality **of** field **installed** managed communications network entities **of** a communications network, **each** field **installed** managed communications network entity being represented and modeled by an associated managed object instance stored...

...database associated with the NMS, the CLI framework component comprising: a. a CLI dictionary codifying **a** plurality **of** managed communications network entity-specific **CLI** commands and maintaining at least one **mapping** between **the** managed communications network entity-specific CLI commands **and** a corresponding managed object type;b. a generic processor executing coded logic to: i. detect...

...responsive to the detected event selectively generate a sequence of CLI commands required to configure **the** field **installed** managed communications network entity **associated** with said managed object instance by consulting the CLI dictionary;iii. handle execution of said sequence of CLI commands at **said** field **installed** managed communications network entity, including interpreting CLI command execution results received from **said** field **installed** managed communications network entity; andiv. generating an error report based on an unsuccessful execution...

...the execution results; andc. a communications module transmitting said sequence of CLI commands to **said** field **installed** managed communications network entity to be executed thereon, and conveying the execution results received from **said** field **installed** managed communications network entity to the generic **processor** , **wherein** a network management and service provisioning solution is provide **making** abstraction **of** managed communications network entity types.

7/69,K/24 (Item 24 from file: 350)
DIALOG(R)File 350:Derwent WPIX
(c) 2007 The Thomson Corporation. All rts. reserv.

0008061777 - Drawing available
WPI ACC NO: 1997-157344/199715
XRPX Acc No: N1997-129878
Access control **method for resources in** distributed **systems - involves obtaining object references that include unforgable numbers and supplying these references to server objects**
Patent Assignee: SUN MICROSYSTEMS INC (SUNM)
Inventor: NESSETT D M; TOCK T D
Patent Family (8 patents, 8 countries)

Patent Number	Kind	Date	Application Number	Kind	Date	Update	
EP 762289	A2	19970312	EP 1996306020	A	19960816	199715	B
JP 9251425	A	19970922	JP 1996234642	A	19960819	199748	E
TW 314609	A	19970901	TW 1996112101	A	19961003	199803	E
KR 1997012183	A	19970329	KR 199634970	A	19960819	199815	E
US 5742759	A	19980421	US 1995516671	A	19950818	199823	E
CN 1149797	A	19970514	CN 1996113317	A	19960817	200123	E
EP 762289	B1	20040721	EP 1996306020	A	19960816	200449	E
DE 69632938	E	20040826	DE 69632938	A	19960816	200456	E
			EP 1996306020	A	19960816		

Priority Applications (no., kind, date): EP 1996306020 A 19960816; US 1995516671 A 19950818

Patent Details

Number	Kind	Lan	Pg	Dwg	Filing Notes
EP 762289	A2	EN	13	3	
Regional Designated States,Original: DE FR GB IT					
JP 9251425	A	JA	14		
TW 314609	A	ZH			
US 5742759	A	EN	14		
EP 762289	B1	EN			
Regional Designated States,Original: DE FR GB IT					
DE 69632938	E	DE			Application EP 1996306020
					Based on OPI patent EP 762289

Alerting Abstract EP A2
The access control method involves a user operating at a display device (107) and establishes a authenticated link to the computer (101). The computer or the system has a client object (117) and a number of server objects (119,121). When the user logs on the client object obtains details of the associated membership group (123).
The client object can communicate with the server objects to identify objects that will be required. The server objects return a reference that includes an unforgable number. When the user makes a print request, it passes the object reference. The print server uses these to obtain approved access to other servers.
ADVANTAGE - Provides simple and efficient "delegation" handling of user access rights.

Title Terms/Index Terms/Additional Words: ACCESS; CONTROL; METHOD; RESOURCE ; DISTRIBUTE; SYSTEM; OBTAIN; OBJECT; REFERENCE; NUMBER; SUPPLY; SERVE

Class Codes
International Classification (Main): G06F-001/00, G06F-012/00, G06F-012/14, G06F-015/00, H04L-009/00
(Additional/Secondary): G06F-013/00, G06F-017/21, G06F-009/46, G09C-001/00

, H04L-009/32
US Classification, Issued: 395187010, 395800280, 395800300, 395200330, 395200490, 395200550, 395200590, 711163000

File Segment: EngPI; EPI;
DWPI Class: T01; P85
Manual Codes (EPI/S-X): T01-F05G5; T01-H01C2; T01-H07C5A; T01-J05B4A
Access control **method for resources in** distributed **systems**...

Original Titles:
...Method and system for **securely controlling access** to system resources in a **distributed** system...

...Method and system for **securely controlling access** to system resources in a **distributed** system...

...METHOD AND SYSTEM FOR **CONTROLLING SECURITY** OF **ACCESS** TO SYSTEM RESOURCE IN **DISTRIBUTED** SYSTEM...

...Method and system for facilitating access **control** to system resources in a **distributed computer system** .

Original Publication Data by Authority

Original Abstracts:
Embodiments of the present invention provide an improve method and system for **securely controlling** access to **resources in a distributed computer system** . One **embodiment of the** present invention stores and binds a group identification to a target object and then uses...
...Embodiments of the present invention provide an improved method and system for **securely controlling access** to resources in a **distributed computer system** . One **embodiment of the** present invention stores and **binds a group** identification to a target object and then uses membership checking to determine whether a client...

...the present invention avoids performing costly cryptographic operations in order to verify access rights of **requesting** objects, as **was** common **in** some prior art systems. A **second** embodiment of the present invention stores and binds a group identification to a target object...
Claims:
1. A method executed in a **computer system for controlling** access **to** system resources **in** a **distributed computer system** , **the method** comprising the steps of: sending a request from a client object to a spreadsheet server...

...A method executed in a **computer system** (101) for **controlling** access to system resources in a **distributed computer system** comprising:</br> sending a request (201) from a client object (117) to a spreadsheet server object to bind a group identifier to a spreadsheet object;</br> under **control** of the spreadsheet server object;</br> obtaining **a spreadsheet** object (205);</br> **storing** the group identifier with the spreadsheet **object** (**207**);</br> **generating** an unforgeable checksum (209);</br> storing the unforgeable checksum with the spreadsheet object (209);</br> sending the...A method executed in a **computer system** for facilitating access **control** to system resource in a **distributed computer system** , the **distributed computer system** including a first server object, a target object, a client object and a second server...

...of the objects belonging to one or more specified groups of objects residing in the **computer system** , the method comprising the steps of:under **control** of the first server object,storing a group identifier associated with the target object in...

...group of object in the computer system with access privileges to the target object;under **control** of the second server object,sending **an access** request to the **first** server object requesting access to **the target object** , the **access request including** a second server principal identifier which identifies a principal operating the second server object;under...

...target object, the target object reference indicating a location of the target object in the **computer system** ;under **control** of the client object,locating a second server object which operates on behalf of a

7/69,K/21 (Item 21 from file: 350)
DIALOG(R)File 350:Derwent WPIX
(c) 2007 The Thomson Corporation. All rts. reserv.

0008978289 - Drawing available
WPI ACC NO: 1998-532222/199845
Related WPI Acc No: 1998-532211; 1998-532223; 1998-532433; 1999-024004; 2002-470358
XRPX Acc No: N1998-415231

Dynamic client registry for distribution of information over network - in which information from client entities on different networks is organized for selective sharing

Patent Assignee: BURNS T A (BURN-I); BUTMAN R A (BUTM-I); DOUGHERTY J C (DOUG-I); KMIEC M D (KMIE-I); MALONE T J (MALO-I); PFN INC (PFNP-N); RAMACHANDRAN R (RAMA-I)
Inventor: BURNS T A; BUTMAN R A; DOUGHERTY J C; KMIEC M D; MALONE T J; RAMACHANDRAN R

Patent Family (5 patents, 80 countries)

Patent Number	Kind	Date	Application Number	Kind	Date	Update	
WO 1998043184	A1	19981001	WO 1998US5731	A	19980324	199845	B
AU 199867701	A	19981020	AU 199867701	A	19980324	199909	E
US 6026430	A	20000215	US 1997828833	A	19970324	200016	E
EP 1019850	A1	20000719	EP 1998913067	A	19980324	200036	E
			WO 1998US5731	A	19980324		
JP 2002515156	W	20020521	JP 1998545903	A	19980324	200236	E
			WO 1998US5731	A	19980324		

Priority Applications (no., kind, date): US 1997828833 A 19970324

Patent Details

Number	Kind	Lan	Pg	Dwg	Filing Notes
WO 1998043184	A1	EN	132	47	

National Designated States,Original: AL AM AT AU AZ BA BB BG BR BY CA CH CN CU CZ DE DK EE ES FI GB GE GH GM GW HU ID IL IS JP KE KG KP KR KZ LC LK LR LS LT LU LV MD MG MK MN MW MX NO NZ PL PT RO RU SD SE SG SI SK SL TJ TM TR TT UA UG US UZ VN YU ZW
Regional Designated States,Original: AT BE CH DE DK EA ES FI FR GB GH GM GR IE IT KE LS LU MC MW NL OA PT SD SE SZ UG ZW

AU 199867701	A	EN		Based on OPI patent WO 1998043184
EP 1019850	A1	EN		PCT Application WO 1998US5731
				Based on OPI patent WO 1998043184
JP 2002515156	W	JA	128	PCT Application WO 1998US5731
				Based on OPI patent WO 1998043184

Regional Designated States,Original: AT BE CH DE DK ES FI FR GB GR IE IT LI LU MC NL PT SE

Alerting Abstract WO A1

The registry is used to organise information from client entities on different networks for selective sharing, and includes a computer for storing a dynamic client registry and resource locators containing function names.

A web server causes the computer to respond to the resource locators by loading the function name indicated. A database management program organises the dynamic client registry.

USE - Providing **control** over **distribution** , redistribution, **access security** , filtering, organizing and display of information across disparate networks.

ADVANTAGE - Enables selective transmission of valuable information in manner which allows for control or replication and publication of information.

Title Terms/Index Terms/Additional Words: DYNAMIC; CLIENT; REGISTER; DISTRIBUTE; INFORMATION; NETWORK; ENTITY; ORGANISE; SELECT; SHARE

Class Codes
International Classification (Main): G06F-015/00, G06F-015/16, G06F-017/30
(Additional/Secondary): G06F-012/00, G06F-012/14, G06F-013/00
US Classification, Issued: 709203000, 709217000, 709225000, 709227000, 709238000, 709239000, 709249000

File Segment: EPI;
DWPI Class: T01
Manual Codes (EPI/S-X): T01-D01; T01-H07C5E; T01-J05B4M

Alerting Abstract ...USE - Providing **control** over **distribution** , redistribution, **access** **security** , filtering, organizing and display of information across disparate networks...

Original Publication Data by Authority

Original Abstracts:
...to resource locators directed to it and to direct the database management program in organizing **the** dynamic client registry; several secondary computers **networked** with the first, each having a disk for storing a dynamic group registry and resource...

...resource locators directed to it and to direct the database management program in organizing the **dynamic** client registry; several secondary computers **n**etworked with the first, each having a disk for storing a dynamic group registry and resource...

...locators directed to it and to direct the database management program in organizing the dynamic **client** registry; several **secondary** computers **networked** with the first, each having a disk for storing a dynamic group registry and resource...
Claims:
...for execution in the client side communications server in each secondary computer so that communications **between** the first computer and each **secondary** computer cause **the** selected predetermined **functions** to be **executed** dynamically in **order** to **store** and index information in the **dynamic** client registry **for** selective access **by** each **secondary** computer.

7/69,K/19 (Item 19 from file: 350)
DIALOG(R)File 350:Derwent WPIX
(c) 2007 The Thomson Corporation. All rts. reserv.

0009798320 - Drawing available
WPI ACC NO: 2000-087497/200007
Related WPI Acc No: 1999-561717
XRPX Acc No: N2000-068688
Security **system for business** use **computer**
Patent Assignee: DMW WORLDWIDE INC (DMWW-N); HARTLEY B V (HART-I); INNERWALL INC (INNE-N); KNIGHT E (KNIG-I); MAVROS C (MAVR-I); REYNOLDS K (REYN-I); ZYMBALUK G (ZYMB-I)
Inventor: HARTLEY B V; KNIGHT E; MAVROS C; REYNOLDS K; ZYMBALUK G
Patent Family (5 patents, 82 countries)

Patent Number	Kind	Date	Application Number	Kind	Date	Update	
WO 1999066383	A2	19991223	WO 1999US13476	A	19990615	200007	B
AU 199945682	A	20000105	AU 199945682	A	19990615	200024	E
US 20020026591	A1	20020228	US 199891270	P	19980615	200220	E
			US 1999333547	A	19990615		
			US 2001834334	A	20010412		
US 6889168	B2	20050503	US 199891270	P	19980615	200531	E
			US 1999333547	A	19990615		
			US 2001834334	A	20010412		
US 20050171737	A1	20050804	US 199891270	P	19980615	200552	E
			US 1999333547	A	19990615		
			US 2001834334	A	20010412		
			US 2005100714	A	20050407		

Priority Applications (no., kind, date): US 2005100714 A 20050407; US 2001834334 A 20010412; US 1999333547 A 19990615; US 199891270 P 19980615

Patent Details

Number	Kind	Lan	Pg	Dwg	Filing Notes
WO 1999066383	A2	EN	37	15	

National Designated States,Original: AL AM AT AU AZ BA BB BG BR BY CA CH CN CU CZ DE DK EE ES FI GB GD GE GH GM HR HU ID IL IN IS JP KE KG KP KR KZ LC LK LR LS LT LU LV MD MG MK MN MW MX NO NZ PL PT RO RU SD SE SG SI SK SL TJ TM TR TT UA UG UZ VN YU ZW
Regional Designated States,Original: AT BE CH CY DE DK EA ES FI FR GB GH GM GR IE IT KE LS LU MC MW NL OA PT SD SE SL SZ UG ZW

AU 199945682	A	EN	Based on OPI patent WO 1999066383
US 20020026591	A1	EN	Related to Provisional US 199891270
			Continuation of application US 1999333547
US 6889168	B2	EN	Related to Provisional US 199891270
			Continuation of application US 1999333547
US 20050171737	A1	EN	Related to Provisional US 199891270
			Continuation of application US 1999333547
			Continuation of application US 2001834334
			Continuation of patent US 6889168

Alerting Abstract WO A2
NOVELTY - Security module of the system under direction from processor (12) accesses and analyzes selected portions of the computer comprising unix server (10) to identify vulnerabilities. Utility module under direction from processor performs various utility functions with regard to

computer, in response to identified vulnerabilities.
DESCRIPTION - Security information for performing analysis of computer is stored in security system memory (30). The security system is connected to the computer comprising unix server (10) via (18). The reporting module of the system provides status information to GUI with regard to operations of the system. The security module includes at least one of configuration mode which performs initial analysis of the **computer system** acquire configuration information, **directory** checking module analyzing **directories** and files in system memory (13) to determine if security initial files have been tampered, user **manager** module, integrity checking module, **network** checking module and a password checking module. The utility module is chosen from user manager module, file removal module, file marking module, and scheduling module. An INDEPENDENT CLAIM is also included for method of providing a security assessment for computer system.
USE - For business use computer.
ADVANTAGE - Enables manually marking certain critical files and analyzing the marked files to detect tampering when directory check module is activated. Enables scheduling automated performance of functions and providing reports to the system user in a number of different formats.
DESCRIPTION OF DRAWINGS - The figure shows block diagram of security system.
10 Unix server
12 Processor
13 System memory
18 Via
30 Security system memory

Title Terms/Index Terms/Additional Words: SECURE; SYSTEM; BUSINESS; COMPUTER
Class Codes
International Classification (Main): G06F, G06F-011/30, G06F-012/14, G06F-015/00
(Additional/Secondary): H04L-009/00
US Classification, Issued: 713201000, 709224000, 702186000, 702186000, 713201000

File Segment: EPI;
DWPI Class: T01
Manual Codes (EPI/S-X): T01-H07C5A; T01-J12C

Security **system for business** use **computer**

Alerting Abstract ...security module includes at least one of configuration mode which performs initial analysis of the **computer system** acquire configuration information, **directory** checking module analyzing **directories** and files in system memory (13) to determine if security initial files have been tampered, user **manager** module, integrity checking module, **network** checking module and a password checking module. The utility module is chosen from user manager...

Original Publication Data by Authority

Original Abstracts:
...identify, notify, and possibly correct, vulnerabilities and discrepancies. The security system includes a number of **security** tools and **utilities in** order to **perform** these functions. The **security** system includes the capability to identify the system configuration and once this is done performs different processes to analyze the **computer system directories** , locate **vulnerabilities in the** files or

directories , check the **network access** , do analysis **of** the users or groups which have access to the computer system and check the permissions ...

...identify, notify, and possibly correct, vulnerabilities and discrepancies. The security system includes a number of **security** tools and **utilities** in order to perform these **functions** . The **security system** includes the capability to identify the system configuration and once this is done performs different processes to analyze the **computer system directories** , locate vulnerabilities in the files or **directories** , **check the network** access, do analysis of the **users** or groups **which** have access to the **computer system** and check the permissions which these parties have been granted, and analyze passwords of the...

...security analysis computer system to identify, notify, and possibly correct, vulnerabilities and discrepancies. The security **system includes a** number of **security** tools and **utilities** in **order** to perform these functions. The security system includes **the** capability to **identify** the **system** configuration **and** once **this** is done **performs different** processes to analyze the **computer system directories** , locate vulnerabilities in the files or **directories** , check the **network** access, **do analysis of** the users or groups which have **access** to the **computer system** and check the permissions which these parties have been granted, and analyze passwords of the...

...to identify, notify, and possibly correct, vulnerabilities and discrepancies. The security system includes a number **of** security **tools and utilities** in **order** to perform these functions. The security system incudes the capability to identify the **system** configuration and **once** this **is** done **performs different processes** to analyze **the computer system directories** , locate vulnerabilities in the files or **directories** , check the **network** access, do analysis of the users **or groups which** have access to the **computer** system and check the **permissions** which these parties have been granted, and analyze passwords of the users. The utilities include...

...to permanently remove files from the computer system, mark particular files to be analyzed, as **well** as schedule the **security** tests to be performed at predetermined times...

...des vulnerabilites et des anomalies. Ce systeme de securite comporte un certain nombre d'outils **de securite** et d' **utilitaires** destines a executer ces fonctions. Il a la capacite d'identifier la configuration du systeme et, cela fait, d'effectuer **differentes** operations pour **analyser** les repertoires, localiser les vulnerabilites dans les fichiers ou les directoires, verifier l'acces reseau...

...permanence des fichiers du systeme, de marquer des fichiers particuliers a analyser et de planifier **les** essais de **securite** a executer a des moments predetermines.

Claims:

...said security system comprising:at least one security module which under direction from the processor **accesses** and analyzes **selected** portions of the computer apparatus to identify vulnerabilities;at least one utility module which under...

...performs various utility functions with regards to the computer apparatus in response to the identified **vulnerabilities** ; anda **security** system memory which contains security information for performing the analysis of the computer apparatus...

...1. A computer security system, comprising:a configuration/set-up module that operates under **direction** of a processor of a **computer system** and that identifies **security** critical **files** of the **computer system** ;a **directory** checking module that operates under **direction** of the processor and that **identifies** **unauthorized** changes to the security critical files; anda **user** **manager** module that operates **under direction** of the processor and that identifies unauthorized **access** to the **security** critical files.

...

...said security system comprising:at least one security module which under direction from the processor **accesses** and analyzes selected **portions** of the computer apparatus to identify vulnerabilities;at least one utility module which under the direction from the processor, performs various **utility** functions with **regards** to the computer apparatus in response to the identified vulnerabilities; anda security system memory

7/69,K/18 (Item 18 from file: 350)
DIALOG(R)File 350:Derwent WPIX
(c) 2007 The Thomson Corporation. All rts. reserv.

0010023825 - Drawing available
WPI ACC NO: 2000-328317/200028
XRPX Acc No: N2000-247139
Computer system hardware resource sharing method for business application, involves selecting at least one system operating mode and operation interval
Patent Assignee: SAVVY FRONTIERS PROPERTY TRUST (SAVV-N)
Inventor: WEBER H J
Patent Family (1 patents, 1 countries)

Patent Number	Kind	Date	Application Number	Kind	Date	Update	
US 6052781	A	20000418	US 1997803636	A	19970221	200028	B

Priority Applications (no., kind, date): US 1997803636 A 19970221

Patent Details

Number	Kind	Lan	Pg	Dwg	Filing Notes
US 6052781	A	EN	36	26	

Alerting Abstract US A
NOVELTY - The computer system's hardware resources are configured to select at least one of primary and secondary system operating modes. At least one of two operation intervals is selected during an initial ROM-BIOS **controlled** POST sequence of **computer system** , preferably before BOOT of OS.
DESCRIPTION - A computational portion, a random access memory portion and an operator interface portion of the computer system's hardware resources are shared between user-1 and user-2. Hard disk drive (HDD0) (90-1) and HDD1 (90-2) are interlinked with the hardware resources. Operating system software of user-1, user-2 are respectively maintained on HDD0 and HDD1. The primary system operating mode enables the user-1 to access the HDD0 while denying functional access to HDD1. Secondary system operating mode enables user-2 to access HDD1 while denying functional access to HDD0. The operation interval includes the respective user and system operating mode. An INDEPENDENT CLAIM is also included for the computer system hardware resource sharing apparatus.
USE - For business and office application, for students for enabling at least two non-current users to exercise functionally separate operational access to hardware resources while maintaining substantially incorruptible OS and program software integrity for each user.
ADVANTAGE - The two hard disk drives are electrically disassociated and independently operable only by an intended user. Non-intended user cannot access the unique hard disk drive. Even massive errors such as disk reformat does not occur. OS on each HDD may be nearly identical or entirely different. When the user accesses the computer system, corresponding HDD is also accessed. Any other HDD is operationally set aside and **secured** against **access** through password **protection** during boot by unique removable media device or through hardware selection devices such as key switch or user ID data card.
DESCRIPTION OF DRAWINGS - The figure shows the arrangement of PC including operator selectable hard disk drive exclusion.
90-1 HDD0
90-2 HDD1

Title Terms/Index Terms/Additional Words: COMPUTER; SYSTEM; HARDWARE; RESOURCE; SHARE; METHOD; BUSINESS; APPLY; SELECT; ONE; OPERATE; MODE;

INTERVAL

Class Codes
International Classification (Main): G06F-013/00
US Classification, Issued: 713200000, 713002000, 713100000

File Segment: EPI;
DWPI Class: T01
Manual Codes (EPI/S-X): T01-F02C2; T01-F05B2; T01-H05A

Alerting Abstract ...modes. At least one of two operation intervals is selected during an initial ROM-BIOS **controlled** POST sequence of **computer system** , preferably before BOOT of OS....computer system, corresponding HDD is also accessed. Any other HDD is operationally set aside and **secured** against **access** through password **protection** during boot by unique removable media device or through hardware selection devices such as key...

Original Publication Data by Authority

Claims:
...enables at least two non-concurrent users to exercise functionally separate operational access to the **computer system ' s hardware** resources while **maintaining** substantially **incorruptible** operating system and program software integrity for each user, comprising steps of:sharing a common...

...at least a first hard disk drive and a second hard disk drive with the **computer system** 's hardware resources; **maintaining the first** user's operating system software **and** program files on the first hard disk drive;maintaining the second user's operating system software and program **files** on the second hard disk **drive** ;configuring the **computer system** 's hardware resources to enable a selectable one of at least a first system operating...

...system operating mode, and a second interval of operation including the second user and the **second** system operating mode **during** an initial **ROM** -BIOS **controlled POST sequence** of the **computer system and** preferably prior to a BOOT of **the** operating **system**.>

7/69,K/13 (Item 13 from file: 350)
DIALOG(R)File 350:Derwent WPIX
(c) 2007 The Thomson Corporation. All rts. reserv.

0013129049 - Drawing available
WPI ACC NO: 2003-211125/200320
XRPX Acc No: N2003-168269
Stand-alone security **system for controlling** access **to** secured **information and self-service functionality for sponsor organization for Web-based and IVR-based self-service functions**
Patent Assignee: BURCHARD W (BURC-I); EDWARDS B T (EDWA-I); HARRIS S A (HARR-I); HUMANA INC (HUMA-N); KEINSLEY B E (KEIN-I); LATIMER E W (LATI-I); LAWHEAD A L (LAWH-I); LIGHT E P (LIGH-I); ROSENBERG S (ROSE-I); SMITHSON M A (SMIT-I); STANLEY C (STAN-I); TOWNSEND D L (TOWN-I); WEBER L S (WEBE-I)
Inventor: BURCHARD W; EDWARDS B T; HARRIS S A; KEINSLEY B E; LATIMER E W; LAWHEAD A L; LIGHT E P; ROSENBERG S; SMITHSON M A; STANLEY C; TOWNSEND D L; WEBER L S
Patent Family (6 patents, 100 countries)

Patent Number	Kind	Date	Application Number	Kind	Date	Update	
WO 2003017096	A1	20030227	WO 2002US25272	A	20020812	200320	B
US 20030154403	A1	20030814	US 2001311821	P	20010814	200355	E
			US 2002216664	A	20020812		
EP 1417574	A1	20040512	EP 2002768461	A	20020812	200431	E
			WO 2002US25272	A	20020812		
AU 2002331022	A1	20030303	AU 2002331022	A	20020812	200452	E
JP 2005500617	W	20050106	WO 2002US25272	A	20020812	200505	E
			JP 2003521939	A	20020812		
IN 200400289	P4	20051209	WO 2002US25779	A	20020814	200604	E
			IN 2004CN289	A	20040212		

Priority Applications (no., kind, date): US 2002216664 A 20020812; US 2001311821 P 20010814

Patent Details

Number	Kind	Lan	Pg	Dwg	Filing Notes
WO 2003017096	A1	EN	176	30	

National Designated States,Original: AE AG AL AM AT AU AZ BA BB BG BR BY BZ CA CH CN CO CR CU CZ DE DK DM DZ EC EE ES FI GB GD GE GH GM HR HU ID IL IN IS JP KE KG KP KR KZ LC LK LR LS LT LU LV MA MD MG MK MN MW MX MZ NO NZ OM PH PL PT RO RU SD SE SG SI SK SL TJ TM TN TR TT TZ UA UG UZ VC VN YU ZA ZM ZW
Regional Designated States,Original: AT BE BG CH CY CZ DE DK EA EE ES FI FR GB GH GM GR IE IT KE LS LU MC MW MZ NL OA PT SD SE SK SL SZ TR TZ UG ZM ZW

US 20030154403	A1	EN			Related to Provisional US 2001311821
EP 1417574	A1	EN			PCT Application WO 2002US25272
					Based on OPI patent WO 2003017096

Regional Designated States,Original: AL AT BE BG CH CY CZ DE DK EE ES FI FR GB GR IE IT LI LT LU LV MC MK NL PT RO SE SI SK TR

AU 2002331022	A1	EN			Based on OPI patent WO 2003017096
JP 2005500617	W	JA	280		PCT Application WO 2002US25272
					Based on OPI patent WO 2003017096
IN 200400289	P4	EN			PCT Application WO 2002US25779

Alerting Abstract WO A1
NOVELTY - Sponsor organizations e.g. healthcare companies, **use** the stand-alone **security** system for controlling **access** to **secured** information by clients that access the company's data and other resources

over a distributed information retrieval system e.g. WWW.
DESCRIPTION - The secured logon application is a stand-alone **security** system which controls **access** to **secured** information and self-service functionality for a sponsor organization via a secure, externally managed, dynamic menuing program that provides for controlled access to resources e.g. secured information and self-service functionality of the sponsor organization. It can be implemented using commercially available computer equipment and programming languages, and used for web-based and IVR-based self-service functions.
USE - Web-based **security** applications for providing controlled access to sponsor organisation's data and other resources.
ADVANTAGE - Secured logon application can have differences in configuration depending upon the sponsor organization, and can be integrated and blended into a web site between an unsecured section of the site and a secured section of the site.
DESCRIPTION OF DRAWINGS - The drawing shows the relationship between an entity, a user, what the user can do e.g. business functions, and what data the user can perform those functions on (access identifiers).

Title Terms/Index Terms/Additional Words: STAND; SECURE; SYSTEM; CONTROL; ACCESS; INFORMATION; SELF; SERVICE; FUNCTION; ORGANISE; WEB; BASED

Class Codes
International Classification (Main): G06F-011/30, G06F-015/00, G06F-009/445
(Additional/Secondary): G06F-015/173, G06F-017/00, G06F-017/60, G06F-007/00, H04L-009/00
US Classification, Issued: 713201000, 709223000

File Segment: EPI;
DWPI Class: T01
Manual Codes (EPI/S-X): T01-J12C; T01-N01D1A; T01-N02B1B; T01-S01C
Stand-alone security **system for controlling** access **to** secured **information and self-service functionality for sponsor organization for Web-based and IVR-based self**...

Original Titles:
WEB-BASED **SECURITY** WITH CONTROLLED **ACCESS** TO DATA AND RESOURCES...

...WEB-BASED **SECURITY** WITH CONTROLLED **ACCESS** TO DATA AND RESOURCES...

...Web-based **security** with controlled **access** to data and resources...

...WEB-BASED **SECURITY** WITH CONTROLLED **ACCESS** TO DATA AND RESOURCES...

Alerting Abstract ...NOVELTY - Sponsor organizations e.g. healthcare companies, **use** the stand-alone **security** system for controlling **access** to **secured** information by clients that access the company's data and other resources over a distributed...
DESCRIPTION - The secured logon application is a stand-alone **security** system which controls **access** to **secured** information and self-service functionality for a sponsor organization via a secure, externally managed, dynamic...

... **USE** - Web-based **security** applications for providing controlled access to sponsor organisation's data and other resources

Original Publication Data by Authority

Original Abstracts:

A stand-alone **security** system controlling **access to secured** information **and** self- **service** functionality for a sponsor organization, usable for Web-based and IVR-based self-service functions, having five primary facets: (1) control of **access** to **secured** information (**2**) enabling **access** to **users** having **indirect** and **direct** relationships with the **sponsor** organization (3) **distribution** of security **administration from** a central **information** technology resource to **users** of the **security system** , (4) support **for** integration into different environments, and (5) support for system integrators. Key components of access control...
...A stand-alone **security** system controlling **access** to **secured** information and self- **service** functionality for **a** sponsor **organization** , usable for Web-based and IVR-based self-service functions, having five primary facets: (1) control of **access** to **secured** information and self-service functionality for **a** sponsor **organization** , (2) enabling **access** to users having indirect relationships to the sponsor organization and to users having a **direct** relationship with the sponsor organization, (**3**) distribution of **security administration** from a central information technology **resource** to **various users** of the **security** system, (4) support for integration **into** different kinds **of** environments, and (5) support for system integrators. Key components of access control include (1) association...

...who handles day-to-day security administration for the employer. Facet (3) enables multiple levels **of distribution** , including enabling one organization to delegate its rights to another organization...

...A stand-alone **security** system controlling **access** to **secured** information and self-service functionality for a sponsor **organization** , usable for **Web** -based **and** IVR-based self-service functions, having five primary facets: (1) control of **access** to **secured** information (2) enabling **access** to users having indirect and **direct** relationships **with** the **sponsor** organization (3) **distribution of security administration** from a central **information** technology resource to **users** of the **security** system, (4) **support** for integration into different environments, and (5) **support** for system **integrators** . Key components of **access** control include (1) association of a userID with one specific person, (2) identification of keys...

...un systeme RVI et presentant cinq facettes principales: (1) surveillance de l'acces aux informations **securisees** , (2) acces aux **utilisateurs** ayant un lien indirect et **direct** avec l'organisation de parrainage, (3) distribution de **l ' administration** de **securite a** partir d'une ressource de **technologie** d'information centrale aux **utilisateurs** du **systeme securise** , (4) **support** dans le cadre de l'integration a differents environnements, (5) support aux integrateurs **de** systemes. Les **composants** cles de la surveillance de l'acces sont constitues de (1) l'association d'une...
Claims:
We claim:1. A stand-alone **security** system controlling **access** to **secured** information and self- **service** functionality for **a** sponsor **organization** , comprising:means for controlling **access** to **secured** information and self-service functionality for the sponsor **organization** ;means **for** enabling **access** to **users** who have indirect relationships to the sponsor organization as well as to users who have a **direct** relationship with the sponsor organization;means for **distributing security administration** from a **central** information technology resource to various **users** of the **security system** ;means **for** supporting integration into different kinds of environments; and **means** for supporting

system integrators who need to interface with and **use** **information** in the **security** system in **order** to **execute** their business **functions**.>

7/69,K/12 (Item 12 from file: 350)
DIALOG(R)File 350:Derwent WPIX
(c) 2007 The Thomson Corporation. All rts. reserv.

0013158471 - Drawing available
WPI ACC NO: 2003-241263/200324
Related WPI Acc No: 2003-362270
XRPX Acc No: N2003-192073
Interfacing method for security **processor** used **in online transactions over networks e.g. Internet, in which macro-** security **operations are** used **for communicating tasks and results between host and security processors**
Patent Assignee: CAVIUM NETWORKS (CAVI-N); CAVIUM NETWORKS INC (CAVI-N)
Inventor: AHMED K E; CARLSON D A; HUSSAIN M R; KESSLER R E; SANZONE R A; VARGA M D
Patent Family (4 patents, 33 countries)

Patent Number	Kind	Date	Application Number	Kind	Date	Update	
EP 1282025	A2	20030205	EP 200216424	A	20020722	200324	B
JP 2003216591	A	20030731	JP 2002215500	A	20020724	200351	E
TW 576963	A	20040221	TW 2002116472	A	20020724	200455	E
US 6789147	B1	20040907	US 2001307643	P	20010724	200459	E
			US 200125512	A	20011219		

Priority Applications (no., kind, date): US 2001307643 P 20010724; US 200125512 A 20011219

Patent Details

Number	Kind	Lan	Pg	Dwg	Filing Notes
EP 1282025	A2	EN	22	10	
Regional Designated States,Original: AL AT BE BG CH CY CZ DE DK EE ES FI FR GB GR IE IT LI LT LU LV MC MK NL PT RO SE SI SK TR					
JP 2003216591	A	JA	64		
TW 576963	A	ZH			
US 6789147	B1	EN			Related to Provisional US 2001307643

Alerting Abstract EP A2
NOVELTY - A processor includes execution units to process requests for security operations, and output results of the requests to output data structures associated with the requests within a remote memory based on pointers stored in the requests.
DESCRIPTION - The method involves communicating tasks and results between a host processor and a security coprocessor having a number of execution units. A host processor can transfer the type of tasks, in particular macro security operations, to the security processor. The security coprocessor having multiple execution units receives requests and provides results through a continuous flow mechanism. The received requests are treated as independent of each other, are **distributed** to available multiple **execution** units in- **order** , can be macro-security **operations** , can take **different** amounts of **time** to **complete** and can be **completed** /returned out-of-order.
INDEPENDENT CLAIMS are included for

1.a method executing on a host processor;

2.a processor including a number of execution units;

3.a system comprising a host processor coupled to a system bus;

4.a machine readable medium storing instructions for executing the

method.

USE - Processing **security** operations in online sales for business-to-**business** and **business** -to-customer over communications networks e.g. Internet.

ADVANTAGE - Macro- **security** operations can be **used** with different techniques for communicating **tasks** and results between **a** host processor and a security processor.

DESCRIPTION OF DRAWINGS - The drawing shows an exemplary establishment of a secure SSL 3.0 session according to an embodiment of the invention.

401 Client
403 Server
407,409,423,425 Security operations

Title Terms/Index Terms/Additional Words: INTERFACE; METHOD; SECURE; PROCESSOR; TRANSACTION; NETWORK; MACRO; OPERATE; COMMUNICATE; TASK; RESULT; HOST

Class Codes

International Classification (Main): G06F-001/00, G06F-015/16, G06F-009/00 (Additional/Secondary): G06F-012/00, G06F-013/00, G06F-015/177, G06F-009/38
US Classification, Issued: 710200000, 713200000, 712034000

File Segment: EPI;
DWPI Class: T01; W01
Manual Codes (EPI/S-X): T01-D01; T01-M05; T01-N01A2A; T01-N02B1B; T01-S03; W01-A05A

Interfacing method for security **processor** used **in online transactions over networks e.g. Internet, in which macro-** security **operations are** used **for communicating tasks and results between host and security processors**

Alerting Abstract ...a continuous flow mechanism. The received requests are treated as independent of each other, are **distributed** to available multiple **execution** units in- **order** , can be macro-security **operations** , can take **different** amounts of **time** to **complete** and can be **completed** /returned out-of-order...

... **USE** - Processing **security** operations in online sales for business-to- **business** and **business** -to-customer over communications networks e.g. Internet...

...ADVANTAGE - Macro- **security** operations can be **used** with different techniques for communicating **tasks** and results between **a** host processor and a security processor

Original Publication Data by Authority

Claims:

...for security operations from a host memory, wherein the number of requests are in an **order** within the host **memory** ; **distributing** , by the request unit, the **number** of requests for the security operations to a number of execution units, wherein the distribution...

...for security operations from a host memory, wherein the number of requests are in an **order** within the host memory; **distributing** , by the request unit, the number of requests for the security operations to a number of execution **units** , wherein the **distribution** is based on **availability** of the number of execution units; processing the number of

requests for the security operations...

7/69,K/10 (Item 10 from file: 350)
DIALOG(R)File 350:Derwent WPIX
(c) 2007 The Thomson Corporation. All rts. reserv.

0013416971 - Drawing available
WPI ACC NO: 2003-507459/200348
XRPX Acc No: N2003-403057
Computer system operated in security trading system providing reference market for processing orders has pre-match control unit for executing order against quote if order matches quote
Patent Assignee: DEUT BOERSE AG (DEBO-N)
Inventor: GOMBER P; MAURER K; ZICKWOLFF M
Patent Family (2 patents, 27 countries)

Patent Number	Kind	Date	Application Number	Kind	Date	Update	
EP 1321870	A1	20030625	EP 2001129858	A	20011214	200348	B
US 20030177086	A1	20030918	US 2002307506	A	20021202	200362	E

Priority Applications (no., kind, date): EP 2001129858 A 20011214

Patent Details

Number	Kind	Lan	Pg	Dwg	Filing Notes
EP 1321870	A1	EN	28	8	

Regional Designated States,Original: AL AT BE CH CY DE DK ES FI FR GB GR IE IT LI LT LU LV MC MK NL PT RO SE SI TR

Alerting Abstract EP A1
NOVELTY - A pre-match control unit (255) is used for determining whether an order matches a quote. The pre-match control unit may be arranged for executing the order against the quote if the order matches the quote or automatically forwarding the order to the reference market for execution if the order does not match the quote.
DESCRIPTION - INDEPENDENT CLAIMS are included for:

1.a method of operating a computer system for processing orders in a security trading system

USE - For processing orders in a **security** trading system providing a reference market, in which orders are matched with quotes for execution purposes.
ADVANTAGE - Provides such internalization functionality without the need to re-submit an order that could not be internalized, to the order book.
DESCRIPTION OF DRAWINGS - The drawing illustrates a system according to a preferred embodiment of the invention.
255 pre-match control unit

Title Terms/Index Terms/Additional Words: COMPUTER; SYSTEM; OPERATE; SECURE ; TRADE; REFERENCE; MARKET; PROCESS; ORDER; PRE; MATCH; CONTROL; UNIT; EXECUTE

Class Codes
International Classification (Main): G06F-017/60
US Classification, Issued: 705037000

File Segment: EPI;
DWPI Class: T01
Manual Codes (EPI/S-X): T01-J05A2F; T01-N01A2F

Alerting Abstract ...a method of operating a **computer system** for processing **orders in** a security **trading** system...

...USE - For processing orders in a **security** trading system providing a reference market, in which orders are matched with quotes for execution...

Original Publication Data by Authority

Original Abstracts:
The invention provides a method of operating a **computer system** for processing **orders in** a security **trading** system providing a reference market, and a corresponding computer system. A message that indicates a...

...The invention provides a method of operating a **computer system** for processing **orders** in a security trading **system providing** a reference **market** , and a corresponding **computer system** . A message that indicates a (private) quote is received. The quote includes quote parameters defining ...

...invention therefore provides an integrated internalization functionality in a security trading system leading to best **execution** of **orders** , to price- **time** priority consistency, order **book** consistency, full transparency and fairness.
Claims:
Computer system operated in a security trading system (260) providing a reference market, the **computer system being arranged** for processing **orders** and **comprising** :means for receiving a message indicating a quote, the quote including quote parameters implicitely defining...

...1. Computer system operated in a security trading system (260) providing a reference market, the **computer system** being arranged **for processing orders** and comprising:means for receiving a message indicating a quote, the quote including **quote parameters** implicitely defining a buy **limit order** and a sell limit order;a quote storage (250) for storing the quote parameters;means...

7/69,K/9 (Item 9 from file: 350)
DIALOG(R)File 350:Derwent WPIX
(c) 2007 The Thomson Corporation. All rts. reserv.

0013565781 - Drawing available
WPI ACC NO: 2003-660043/200362
Related WPI Acc No: 2003-660044; 2007-024009
XRPX Acc No: N2003-526333
Data network management **and service provider using command line interface framework, transmits command sequences to corresponding** managed **data** network **entity, for execution of command line interface actions in entity**
Patent Assignee: ALCATEL CANADA INC (COGE); CHAN D W (CHAN-I); KATZ F (KATZ-I); LANDRY K E D (LAND-I); MURRAY C (MURR-I); NGO C N (NGOC-I); ZABIHI A (ZABI-I)
Inventor: CHAN D W; KATZ F; LANDRY K E D; MURRAY C; MURRAY C W; NGO C N; ZABIHI A
Patent Family (7 patents, 32 countries)

Patent Number	Kind	Date	Application Number	Kind	Date	Update	
US 20030115304	A1	20030619	US 2002115900	A	20020405	200362	B
CA 2365436	A1	20030619	CA 2365436	A	20011219	200362	E
EP 1322066	A2	20030625	EP 2002293097	A	20021213	200362	E
US 7113989	B2	20060926	US 2002115900	A	20020405	200663	E
EP 1322066	B1	20061220	EP 2002293097	A	20021213	200702	E
DE 60216885	E	20070201	DE 60216885	A	20021213	200722	E
			EP 2002293097	A	20021213		
DE 60216885	T2	20070705	DE 60216885	A	20021213	200744	E
			EP 2002293097	A	20021213		

Priority Applications (no., kind, date): CA 2365436 A 20011219; US 2002115900 A 20020405

Patent Details

Number	Kind	Lan	Pg	Dwg	Filing Notes
US 20030115304	A1	EN	13	7	
CA 2365436	A1	EN			
EP 1322066	A2	EN			
Regional Designated States,Original: AL AT BE BG CH CY CZ DE DK EE ES FI FR GB GR IE IT LI LT LU LV MC MK NL PT RO SE SI SK TR					
EP 1322066	B1	EN			
Regional Designated States,Original: DE ES FR GB IT					
DE 60216885	E	DE			Application EP 2002293097 Based on OPI patent EP 1322066
DE 60216885	T2	DE			Application EP 2002293097 Based on OPI patent EP 1322066

Alerting Abstract US A1

NOVELTY - A command line interface (CLI) processor (520) processes the CLI dictionary entries holding vocabulary and grammar specifications of commands used in interacting with at least one **managed** data **network** entity (510), on receiving request for CLI actions to be performed from a managed object server (MOS) (200). A communication module (540) transmits each CLI command sequence to corresponding network entity, for execution.

DESCRIPTION - INDEPENDENT CLAIMS are also included for the following:

1.method of interacting with managed data network entity; and

2.method of providing dictionary of CLI commands.

USE - For **managing** data **networks** such as wireless local area **network**

(LAN) comprising data switching equipments, routers, bridge, access nodes providing multiplexing function, remote access servers (RAS), distribution nodes providing demultiplexing function, customer premise equipment (CPE) and for controlling software applications such as inventory reporting, configuration **management** , statistics gathering, performance reporting, fault **management** , **network surveillance, service provisioning, billing and accounting and security enforcement using** command line interface framework.

ADVANTAGE - Provides automatic entry of CLI command in dictionary and support for multi-vendor equipment by using multiple CLI command vocabularies and dictionaries. Reduces data **network** entity **management costs and time and improves development and maintenance of the network management** and service provisioning solution.

DESCRIPTION OF DRAWINGS - The figure shows the block diagram of the data **network management** and service provisioning command line interface framework.

200 managed object server
510 **managed** data **network** entity
520 CLI processor
540 communication module

Title Terms/Index Terms/Additional Words: DATA; NETWORK; MANAGEMENT; SERVICE; COMMAND; LINE; INTERFACE; FRAMEWORK; TRANSMIT; SEQUENCE; CORRESPOND; ENTITY; EXECUTE; ACTION

Class Codes

International Classification (+ Attributes)

IPC + Level Value Position Status Version					
G06F-0015/173	A	I	F	B	20060101
H04L-0012/24	A	I		R	20060101
H04L-0012/24	A	I	F	B	20060101
H04L-0012/24	A	I	F		20060101
G06F-0015/16	C	I	F	B	20060101
H04L-0012/24	C	I		R	20060101
H04L-0012/24	C	I	F	B	20060101
H04L-0012/24	C	I			20060101
H04L-0012/24	C	I		B	20060101

US Classification, Issued: 709223000, 709222000, 709224000, 709220000, 709223000, 370241000, 370254000, 707100000

File Segment: EPI;
DWPI Class: T01; W01
Manual Codes (EPI/S-X): T01-F05B; T01-N02A2; W01-A06B5A; W01-A06E

Data network management **and service provider using command line interface fr**amework, transmits command sequences to corresponding managed **data** network **entity, for execution of command line interface actions in entity**

Alerting Abstract ...entries holding vocabulary and grammar specifications of commands used in interacting with at least one **managed** data **network** entity (510), on receiving request for CLI actions to be performed from a managed object...
...method of interacting with **managed** data **network** entity; and method of providing dictionary of CLI commands...

...USE - For **managing** data **networks** such as wireless local area **network** (LAN) comprising data switching equipments, routers, bridge, access nodes providing multiplexing function, remote access servers...

...function, customer premise equipment (CPE) and for controlling software applications such as inventory reporting, configuration **management** , statistics gathering, performance reporting, fault **management** , **network** surveillance, service provisioning, billing and accounting and **security enforcement** **using** command line interface framework...

...support for multi-vendor equipment by using multiple CLI command vocabularies and dictionaries. Reduces data **network** entity **management** costs and time and improves development and maintenance of the **network management** and service provisioning solution...

...DESCRIPTION OF DRAWINGS - The figure shows the block diagram of the data **network** **management** and service provisioning command line interface framework...
...510 **managed** data **network** entity...

Original Publication Data by Authority

Original Abstracts:
A method of interacting with a **managed** data **network** entity is provided. The method includes a sequence of steps. A change in the operational state of the **managed** data **network** entity is detected. A CLI dictionary entry is retrieved form a CLI dictionary associated with...

...Based on the retrieved CLI dictionary entry, CLI commands are extracted therefrom to configure the **managed** data **network** entity to reflect the detected change in the operational state. A CLI command sequence is...

...the extracted CLI commands. Each CLI command in the command sequence is sent to the **managed** data **network** entity for execution. CLI command responses are monitored. Based on a successful execution of CLI...

...commands in the CLI command sequence are sent for execution. The solution provides automated configuration **management** of data **network** entities from different vendors when SNMP is not a viable option. The automation eliminates manual CLI command entry in providing **network management** and service provisioning solutions, provides support for multi-vendor equipment by processing multiple CLI command vocabulary and grammar specifications in the CLI command dictionary. The solution reduces data **network** entity **management** costs, downtime, and training time for analysts. The advantages are derived from the ability to...

...data network entities with human readable code greatly improving the development and maintenance of the **network** **management** and service provisioning solution...

...A method of interacting with a **managed** data **network** entity is provided. The method includes a sequence of steps. A change in the operational state of the **managed** data **network** entity is detected. A CLI dictionary entry is retrieved form a CLI dictionary associated with...

...Based on the retrieved CLI dictionary entry, CLI commands are extracted therefrom to configure the **managed** data **network** entity to reflect the detected change in the operational state. A CLI command sequence is...

...the extracted CLI commands. Each CLI command in the command sequence is sent to the **managed** data **network** entity for execution. CLI command responses are monitored. Based on a successful execution of CLI...
...commands in the CLI command sequence are sent for execution. The

solution provides automated configuration **management** of data **network** entities from different vendors when SNMP is not a viable option. The automation eliminates manual CLI command entry in providing **network** **management** and service provisioning solutions, provides support for multi-vendor equipment by processing multiple CLI command vocabulary and grammar specifications in the CLI command dictionary. The solution reduces data **network** entity **management** costs, downtime, and training time for analysts. The advantages are derived from the ability to...

...data network entities with human readable code greatly improving the development and maintenance of the **network** **management** and service provisioning solution...

...A method of interacting with a **managed** data **network** entity is provided. The method includes a sequence of steps. A change in the operational state of the **managed** data **network** entity is detected. A CLI dictionary entry is retrieved form a CLI dictionary associated with...

...Based on the retrieved CLI dictionary entry, CLI commands are extracted therefrom to configure the **managed** data **network** entity to reflect the detected change in the operational state. A CLI command sequence is...
...the extracted CLI commands. Each CLI command in the command sequence is sent to the **managed** data **network** entity for execution. CLI command responses are monitored. Based on a successful execution of CLI...

...commands in the CLI command sequence are sent for execution. The solution provides automated configuration **management** of data **network** entities from different vendors when SNMP is not a viable option. The automation eliminates manual CLI command entry in providing **ne**twork **management** and service provisioning solutions, provides support for multi-vendor equipment by processing multiple CLI command vocabulary and grammar specifications in the CLI command dictionary. The solution reduces data **network** entity **management** costs, downtime, and training time for analysts. The advantages are derived from the ability to...

...data network entities with human readable code greatly improving the development and maintenance of the **network** **management** and service provisioning solution.
Claims:
Network **management** and service provisioning Command Line Interface (CLI) framework, comprising: a. a processor responsive to...

...holding vocabulary and grammar specifications of a plurality of commands used in interacting with at **least** one **managed** data network entity; and c. a communications module sending in sequence for execution and...

...of commands generated in response to the notification as specified in the plurality of dictionary **entries** **wherein** a network management and service provisioning solution is provided making abstraction of the **at** least **one** managed data network entity...

...A Command Line Interface (CLI) **framework** **for** a network **m**anager (NM) that manages **a** plurality of managed entities **of** a communication network, comprising: a CLI dictionary (530) holding vocabulary and grammar specifications for all...

...sequence of commands required to configure a managed entity that said managed object represents in **response** to **said** **event** and handling **execution** of **said** sequence of commands at said managed entity; anda communications module (540) for transmitting said sequence of commands to

said managed entity for execution, and interpreting results **received** from said managed **entity** , **wherein** a network management and service provisioning solution is provided making abstraction of the type of...

...I/we **claim** : **1** . A network management and service provisioning Command Line Interface (CLI) framework, comprising: a. a processor...

...entries holding vocabulary and grammar specifications of a plurality of commands used in interacting with **at** least **one** managed data network entity; and c. a communications module sending in sequence for execution and...

...of commands generated in response to the notification as specified in the plurality of dictionary **entries** **wherein** a network management and service provisioning solution is provided making abstraction of the **at** least **one** managed data network entity...

...We claim:1. A Command Line Interface (CLI) framework **component** **of** a Network Management System (**NMS**), the NMS managing a plurality **of** field **installed** managed communications network entities **of** a communications network, **each** field **installed** managed communications network entity being represented and modeled by an associated managed object instance stored...

...database associated with the NMS, the CLI framework component comprising: a. a CLI dictionary codifying **a** plurality **of** managed communications network entity-specific **CLI** commands and maintaining at least one **mapping** between **the** managed communications network entity-specific CLI commands **and** a corresponding managed object type;b. a generic processor executing coded logic to: i. detect...

...responsive to the detected event selectively generate a sequence of CLI commands required to configure **the** field **installed** managed communications network entity **associated** with said managed object instance by consulting the CLI dictionary;iii. handle execution of said sequence of CLI commands at **said** field **installed** managed communications network entity, including interpreting CLI command execution results received from **said** field **installed** managed communications network entity; andiv. generating an error report based on an unsuccessful execution...

...the execution results; andc. a communications module transmitting said sequence of CLI commands to **said** field **installed** managed communications network entity to be executed thereon, and conveying the execution results received from **said** field **installed** managed communications network entity to the generic **processor** , **wherein** a network management and service provisioning solution is provide **making** abstraction **of** managed communications network entity types.

```
Set     Items   Description
S1    1569864   COMPUTER?(2N)SYSTEM? ? OR NETWORK? OR DISTRIBUT? OR ETHERN-
                ET? OR INTERNET OR INTRANET? OR LAN OR LANS OR WAN OR WANS OR
                WLAN? ? OR VLAN? ?
S2      14742   S1(5N)(PROTECT? OR SECUR? OR GUARD? OR FORTIF? OR SHIELD? -
                OR ENFORC?)(3N)(ACCESS? OR ENTRY OR ENTRIE? ? OR USE??? OR UT-
                ILI? OR USING)
S3       3481   S2(5N)(ENFORC? OR CONTROL? OR REGULAT? OR DIRECT? OR MANAG?
                 OR ADMINISTRAT? OR SUSTAIN? OR ORDER??? OR MAINTAIN? OR SUPE-
                RVIS???)
S4     195926   (ORDER?()SET? ? OR SEQUEN? OR PATTERN? OR ORDER?)(5N)(LEVE-
                L? OR STEP? ? OR STAGE? OR TIER?? ? OR OPERATION? OR FUNCTION?
                 OR COMMAND?)
S5      26666   S4(5N)(TIME? ? OR TIMING OR TEMPORAL? OR CLOCK? OR DURATIO-
                N? OR EVENT? OR SCHEDUL? OR OCCASION? OR DAY? ? OR HOUR? ? OR
                MINUTE? ? OR SECOND? ? OR PERIOD?)
S6      33021   S4:S5(5N)(SECOND? OR COUPLE OR 2ND OR 2 OR DUAL?? OR TWICE
                OR ANOTHER? OR TWO OR DIFFERENT OR PAIR OR MORE(2N)ONE OR ADD-
                ITIONAL)
S7       5876   S6(5N)(PERFORM? OR EXECUT? OR IMPLEMENT? OR OPERATE? ? OR -
                OPERATING OR ENACT? OR HANDL? OR (CARRY? OR CARRIE? ?)()OUT OR
                 COMPLET? OR ENABL? OR ALLOW?)
S8      54114   (PRESELECT? OR PRE()SELECT? OR (SELECT? OR PICK??? OR CHOO-
                SE? OR DESIGNAT? OR CHOSEN OR IDENT?)()BEFORE? OR PREDETERMIN?
                 OR PRE()(DETERMIN? OR SPECIF?))(5N)(ACCESS? OR ENTRY OR ENTR-
                IE? ? OR USE??? OR UTILI?)
S9          1   S3 AND S7 AND S8
S10       126   S3 AND ENFORC?(3N)SECUR?
S11         3   S10 AND S8
S12         2   S2:S3 AND S7 AND S8
S13         1   S12 NOT (S9 OR S11)
S14        22   S2:S3 AND S4:S5 AND S8
S15        19   S14 NOT (S9 OR S11:S13)
S16    126817   (DELIVER? OR SEND??? OR SENT OR UPLOAD? OR DISTRIBUT? OR T-
                RANSFER? OR TRANSMI? OR BEAM??? OR LOAD??? OR POST??? ?)(5N)(-
                SEARCH? OR RESEARCH? OR RETRIEV? OR INQUIR? OR QUERY? OR QUER-
                IE? ? OR REQUEST? OR ASK???)
S17    274804   (RETRIEV? OR RECEIV??? OR ACCEPT? OR ACQUIR? OR OBTAIN? OR
                DOWNLOAD? OR FETCH??? OR ACCESS?)(5N)(SEARCH? OR RESEARCH? OR
                RETRIEV? OR INQUIR? OR QUERY? OR QUERIE? ? OR REQUEST? OR ASK-
                ???)
S18         4   S15 AND S16:S17
S19        15   S15 NOT S18
S20        13   AU=(KOVARIK V? OR KOVARIK, V?)
S21         0   (VINCENT OR VINCE OR VINNIE)(2N)KOVARIK
S22         1   S20 AND S2:S3
File 350:Derwent WPIX 1963-2007/UD=200752
         (c) 2007 The Thomson Corporation
File 347:JAPIO Dec 1976-2007/Mar(Updated 070809)
         (c) 2007 JPO & JAPIO
```

Abstract Pat. files (2)

** Your Assignee **

11/69,K/1 (Item 1 from file: 350)
DIALOG(R)File 350:Derwent WPIX
(c) 2007 The Thomson Corporation. All rts. reserv.

0015307045 - Drawing available
WPI ACC NO: 2005-657227/200567
XRPX Acc No: N2005-538483
Secure access method in computer system, involves granting access request only, if access request does not complete prohibited temporal access pattern and minimum access level for base node does not exceed predetermined access **level**
Patent Assignee: HARRIS CORP (HARO)
Inventor: KOVARIK V J
Patent Family (5 patents, 40 countries)

Patent Number	Kind	Date	Application Number	Kind	Date	Update	
US 20050204131	A1	20050915	US 2004798074	A	20040311	200567	B
CA 2499986	A1	20050911	CA 2499986	A	20050309	200567	E
EP 1577735	A2	20050921	EP 20055394	A	20050311	200567	E
JP 2005259146	A	20050922	JP 200565879	A	20050309	200567	E
CN 1667544	A	20050914	CN 200510054559	A	20050311	200607	E

Priority Applications (no., kind, date): US 2004798074 A 20040311

Patent Details

Number	Kind	Lan	Pg	Dwg	Filing Notes
US 20050204131	A1	EN	18	10	
CA 2499986	A1	EN			
EP 1577735	A2	EN			
Regional Designated States,Original: AL AT BA BE BG CH CY CZ DE DK EE ES FI FR GB GR HR HU IE IS IT LI LT LU LV MC MK NL PL PT RO SE SI SK TR YU					
JP 2005259146	A	JA	17		

Alerting Abstract US A1
NOVELTY - The method involves determining if **access** request from entity with **predetermined access** level, completes a prohibited temporal access pattern for entity. A minimum access level established for base node (110) is compared to **predetermined access** level. The **access** request is granted only, if the access request does not complete the access pattern and minimum **access** level does not exceed **predetermined access** level.
DESCRIPTION - INDEPENDENT CLAIMS are also included for the following:

1.method for restricting access to computer system; and

2.computer system.

USE - For secure access computer system.
ADVANTAGE - Enables maintaining the access authorities for each user dynamically, thereby allowing system objects to have multiple level of access classification based on historical access by each user.
DESCRIPTION OF DRAWINGS - The figure shows the data primitives and hierarchical graph for secure access to computer system.
1021-1024 object types
1041-1043 system functions
110 base node
112 higher level node

Title Terms/Index Terms/Additional Words: SECURE; ACCESS; METHOD; COMPUTER; SYSTEM; REQUEST; COMPLETE; PROHIBIT; TEMPORAL; PATTERN; MINIMUM; LEVEL; BASE; NODE; PREDETERMINED

Class Codes
International Classification (Main): G06F-001/00, G06F-012/14, H04L-009/00
US Classification, Issued: 713166000

File Segment: EPI;
DWPI Class: T01; W01
Manual Codes (EPI/S-X): T01-H01C2; T01-J12C; T01-N02B1B; W01-A06E1C

...**complete prohibited temporal access pattern and minimum access level for base node does not exceed** predetermined access **level**

Original Titles:
...Method and **system enforcing computer security utilizing** an adaptive lattice mechanism...

... **ENFORCING** COMPUTER **SECURITY** UTILIZING ADAPTIVE LATTICE MECHANISM...

... **Enforcing** computer **security** utilizing an adaptive lattice mechanism
...NOVELTY - The method involves determining if **access** request from entity with **predetermined access** level, completes a prohibited temporal access pattern for entity. A minimum access level established for base node (110) is compared to **predetermined access** level. The **access** request is granted only, if the access request does not complete the access pattern and minimum **access** level does not exceed **predetermined access** level.

Original Publication Data by Authority

Original Abstracts:
...the computer system a request from an entity (using 1002). The entity can have a **predetermined access** authorization level **for access** to a first **base** node (110) representing an information type (102) or a computer system function (104). The system...

...access pattern for the entity. The system also compares a minimum access level established for **the** first base node to the **predetermined access** authorization level **assigned to** the entity. Thereafter, the system can grant the access request only if the minimum access level for the first base node does not exceed to the **predetermined access** authorization level.

...

...the computer system a request from an entity (using 1002). The entity can have a **predetermined access** authorization level for **access** to a first base node (110) representing **an information** type (102) or **a** computer system function (104). The system determines if the access request completes a prohibited temporal...

...entity. The system also compares a minimum access level established for the first base node **to** the **predetermined access** authorization level assigned to the entity. Thereafter, the system can grant the **access** request only if the **minimum access** level for the first base node does not exceed to the **predetermined access** authorization level.
Claims:
...the steps of:receiving in said computer system a request from an entity with a **predetermined access** level for **access to** a first **base** node representing at least one of an information type and a computer system function;determining...

...for said entity; andcomparing a minimum access level established for said first base node **to** said **predetermined access** level; andgranting said **access** request **only if** it does not complete a prohibited temporal access pattern for said entity, and said minimum access level for said first base node does not exceed **said predetermined access** level.

...

...computer system, comprising the steps of:receiving in said computer system a request from an **entity** with a **predetermined access** level for **access** to a first base node representing at least one of an information type and a **computer system** function;determining **if** said **access** request completes a prohibited temporal access pattern for said entity; andcomparing a minimum access level established for said first base **node** to said **predetermined access** level; **and** granting said **access** request only if it does not complete a prohibited temporal access pattern for said entity, and said **minimum access** level for said first base node **does** not exceed said **predetermined access** level.

13/69,K/1 (Item 1 from file: 350)
DIALOG(R)File 350:Derwent WPIX
(c) 2007 The Thomson Corporation. All rts. reserv.

0001862168
WPI ACC NO: 1979-K8815B/197947
Authenticating identity of user of information system - transferring terminal user authentication pattern with identification number to host data processing system
Patent Assignee: IBM CORP (IBMC)
Inventor: MATYAS S M; MEYER C H W
Patent Family (5 patents, 5 countries)

Patent Number	Kind	Date	Application Number	Kind	Date	Update	
EP 5179	A	19791114	EP 1979101038	A	19790405	197947	B
US 4218738	A	19800819	US 1978903286	A	19780505	198036	E
CA 1111563	A	19811027				198148	E
EP 5179	B	19830518	EP 1979101038	A	19790405	198321	E
DE 2965420	G	19830707				198328	E

Priority Applications (no., kind, date): EP 1979101038 A 19790405; US 1978903286 A 19780505

Patent Details

Number	Kind	Lan	Pg	Dwg	Filing Notes
EP 5179	A	EN			
Regional Designated States,Original: DE FR GB IT					
CA 1111563	A	EN			
EP 5179	B	EN			
Regional Designated States,Original: DE FR GB IT					

Alerting Abstract EP A
A process confirms the identity of a terminal user provided with an identification number and a secret password in a system providing data communication between a terminal and a host data processing system each having cryptographic appts. The identification number and password are used at the terminal to obtain a terminal user authentication pattern which is transferred with the identification number from the terminal to the host d.p.s.
At the host d.p.s. an operation is performed in accordance with a predetermined number provided by the host and the terminal user identification number to obtain a terminal user first verification pattern. The latter is compared with a second verification pattern obtained at the host d.p.s. in accordance with a **predetermined** terminal **user** test pattern provided at the host d.p.s. and the terminal user authentication pattern.
The process authenticates the identity of a terminal user provided with an identification number and a secret password more securely than customary.

Title Terms/Index Terms/Additional Words: AUTHENTICITY; IDENTIFY; USER; INFORMATION; SYSTEM; TRANSFER; TERMINAL; PATTERN; NUMBER; HOST; DATA; PROCESS

Class Codes
International Classification (Main): G06F-013/00
(Additional/Secondary): G06F-003/00, G07C-011/00, H04K-001/00
US Classification, Issued: 380025000, 340825310, 364DIG002, 364222200, 364222500, 364228400, 364234000, 364235000, 364236200, 364236300, 364238300, 364248100, 364248200, 364259000, 364259200, 380045000

File Segment: EPI;
DWPI Class: T01; T05

Alerting Abstract ...a second verification pattern obtained at the host d.p.s. in accordance with a **predetermined** terminal **user** test pattern provided at the host d.p.s. and the terminal user authentication pattern...

Original Publication Data by Authority

Original Abstracts:
...authentication processing. This is accomplished by providing terminal user identification numbers and passwords and a **predetermined number** at the host data processing system. A first initialization operation is performed at the host...

...in accordance with the terminal user identification numbers and passwords to obtain terminal user authentication **patterns** .A **second** initialization **operation** is **performed** at **the** host **data** processing **system** in **accordance** with the **predetermined** number and the terminal **user** identification numbers **to** obtain terminal **user** first **verification** patterns. A third initialization operation is performed at the host data processing system in accordance...

...during authentication processing and for generating test patterns during the secure run is disclosed which **uses** a variation of the host computer master **key** to reduce risk of **compromise** of total **system security** . The **use** of a variant of the host master key prevents system programmers and/or computer operators...
?

18/69,K/1 (Item 1 from file: 350)
DIALOG(R)File 350:Derwent WPIX
(c) 2007 The Thomson Corporation. All rts. reserv.

0016174489 - Drawing available
WPI ACC NO: 2006-706129/200673
XRPX Acc No: N2006-555460
Security **apparatus for** use **in telecommunication** system , **has** computer **for providing** user **authorization by comparing authorization user input to security code based on** retrieved **user profile**
Patent Assignee: ACCESSLINE COMMUNICATIONS CORP (ACCE-N)
Inventor: EPLER F A; KNIGHT J M; STENSBERG P A; ZHUK O V
Patent Family (1 patents, 1 countries)

Patent Number	Kind	Date	Application Number	Kind	Date	Update	
US 7106845	B1	20060912	US 2000604283	A	20000626	200673	B

Priority Applications (no., kind, date): US 2000604283 A 20000626

Patent Details

Number	Kind	Lan	Pg	Dwg	Filing Notes
US 7106845	B1	EN	27	11	

Alerting Abstract US B1
NOVELTY - The apparatus has a database storing a user profile indicating a set of security modes selectable by the user. A computer communicates with the database to receive telecommunication data transmissions. The computer stores selected security mode in the user profile corresponding to the user. The computer provides user authorization by comparing authorization user input to a security code based on the **retrieved** user profile.
DESCRIPTION - INDEPENDENT CLAIMS are also included for the following:

1. a method of providing security for a telecommunication system

2. a computer-readable signal bearing medium storing instructions for a computer for providing security for a telecommunication system

3. a user prompt signal for providing security for a telecommunication system.

USE - Used in a telecommunication system for telecommunication company, professional service provider such as doctor, lawyer and accountant, financial institution such as bank and securities broker and insurance company.
ADVANTAGE - The computer compares the authorization user input to the security code based on the **retrieved** user profile to provide user authorization, thus effectively providing user security and access to the telecommunication system.
DESCRIPTION OF DRAWINGS - The drawing shows a block diagram of a suitable environment employing a dynamic security system.

Title Terms/Index Terms/Additional Words: SECURE; APPARATUS; TELECOMMUNICATION; SYSTEM; COMPUTER; USER; AUTHORISE; COMPARE; INPUT; CODE; BASED; **RETRIEVAL** ; PROFILE

Class Codes
International Classification (+ Attributes)
IPC + Level Value Position Status Version
H04M-0003/42 A I F B 20060101

US Classification, Issued: 379207110, 379201120, 379189000, 455410000

File Segment: EPI;
DWPI Class: T01; W01
Manual Codes (EPI/S-X): T01-N02B1B; T01-S03; W01-A05B; W01-C02B6

Security **apparatus for** use **in telecommunication** system , **has** computer **for providing** user **authorization by comparing authorization user input to security code based on** retrieved **user profile**

Alerting Abstract ...provides user authorization by comparing authorization user input to a security code based on the **retrieved** user profile....ADVANTAGE - The computer compares the authorization user input to the security code based on the **retrieved** user profile to provide user authorization, thus effectively providing user security and access to the ...

Title Terms.../Index Terms/Additional Words: **RETRIEVAL** ;

Original Publication Data by Authority

Original Abstracts:
...typically only the user would know. Another level of security employs voice fingerprinting or voice **pattern** recognition. Yet another **level** employs a N by M matrix of random numbers, from which a **user** selects numbers from **predetermined** positions to generate a current security code. Various levels of security may be performed on...
Claims:
...user profile corresponds to the user,in response to a telecommunications call from the user, **retrieve** the at least one user profile,receive authorization user input, andprovide user authorization by comparing the received authorization user input to a security code based on the **retrieved** user profile, wherein the security code is an automatically and dynamically generated user security code...

...wherein the plurality of security modes includes a current time sequence recognition mode wherein the **user** security code is based on **predetermined** numerical sequence based on an hour of day, day of week, day of month and...

* AU/INV srch - your Assignee/INV

22/69,K/1 (Item 1 from file: 350)
DIALOG(R)File 350:Derwent WPIX
(c) 2007 The Thomson Corporation. All rts. reserv.

0015307045 - Drawing available
WPI ACC NO: 2005-657227/200567
XRPX Acc No: N2005-538483
Secure access **method in** computer system , **involves granting** access **request only, if access request does not complete prohibited temporal access pattern and minimum access level for base node does not exceed predetermined access level**
Patent Assignee: HARRIS CORP (HARO)
Inventor: **KOVARIK V J**
Patent Family (5 patents, 40 countries)

Patent Number	Kind	Date	Application Number	Kind	Date	Update	
US 20050204131	A1	20050915	US 2004798074	A	20040311	200567	B
CA 2499986	A1	20050911	CA 2499986	A	20050309	200567	E
EP 1577735	A2	20050921	EP 20055394	A	20050311	200567	E
JP 2005259146	A	20050922	JP 200565879	A	20050309	200567	E
CN 1667544	A	20050914	CN 200510054559	A	20050311	200607	E

Priority Applications (no., kind, date): US 2004798074 A 20040311

Patent Details

Number	Kind	Lan	Pg	Dwg	Filing Notes
US 20050204131	A1	EN	18	10	
CA 2499986	A1	EN			
EP 1577735	A2	EN			
Regional Designated States,Original: AL AT BA BE BG CH CY CZ DE DK EE ES FI FR GB GR HR HU IE IS IT LI LT LU LV MC MK NL PL PT RO SE SI SK TR YU					
JP 2005259146	A	JA	17		

Alerting Abstract US A1
NOVELTY - The method involves determining if access request from entity with predetermined access level, completes a prohibited temporal access pattern for entity. A minimum access level established for base node (110) is compared to predetermined access level. The access request is granted only, if the access request does not complete the access pattern and minimum access level does not exceed predetermined access level.
DESCRIPTION - INDEPENDENT CLAIMS are also included for the following:

1.method for restricting access to computer system; and

2.computer system.

USE - For **secure access computer system** .
ADVANTAGE - Enables maintaining the access authorities for each user dynamically, thereby allowing system objects to have multiple level of access classification based on historical access by each user.
DESCRIPTION OF DRAWINGS - The figure shows the data primitives and hierarchical graph for **secure access** to **computer system** .
1021-1024 object types
1041-1043 system functions
110 base node
112 higher level node

Title Terms/Index Terms/Additional Words: SECURE; ACCESS; METHOD; COMPUTER; SYSTEM; REQUEST; COMPLETE; PROHIBIT; TEMPORAL; PATTERN; MINIMUM; LEVEL; BASE; NODE; PREDETERMINED

Class Codes
International Classification (Main): G06F-001/00, G06F-012/14, H04L-009/00
US Classification, Issued: 713166000

File Segment: EPI;
DWPI Class: T01; W01
Manual Codes (EPI/S-X): T01-H01C2; T01-J12C; T01-N02B1B; W01-A06E1C

Secure access **method in** computer system , **involves granting** access **request only, if access request does not complete prohibited temporal access pattern and minimum access...**

Original Titles:
...Method and **system enforcing computer security utilizing** an adaptive lattice mechanism...
Inventor: **KOVARIK V J**

Alerting Abstract ... USE - For **secure access computer system** . ...

...DESCRIPTION OF DRAWINGS - The figure shows the data primitives and hierarchical graph for **secure access** to **computer system** .

Original Publication Data by Authority

Inventor name & address:
KOVARIK V J ...

... **Kovarik, Vincent Joseph, Jr** ...

... **KOVARIK VINCENT JOSEPH JR** ...

... **Kovarik, Vincent Joseph JR**
Original Abstracts:
Method and apparatus for ensuring **secure access** to a **computer system** (1000). The **method can** begin with the step of receiving in the computer system a request from an entity...

...Method and apparatus for ensuring **secure access** to a **computer system** (1000). The method **can begin** with the **step of** receiving in the **computer system** a request from an entity (**using** 1002). The entity can have a predetermined access authorization level for access to a first...
Claims:
A method for **secure access to a computer system , comprising the** steps of:receiving in said computer system a request from an entity with a predetermined...

...1. A method for **secure access** to a **computer system** , comprising the steps of:receiving in said **computer system** a request from **an entity** with a **predetermined access** level for **access** to a first base node representing at least one of an information type and a...
?

```
Set     Items   Description
S1     883612   COMPUTER?(2N)(SYSTEM? ? OR SECUR?) OR NETWORK? OR DISTRIBU-
             T? OR ETHERNET? OR INTERNET OR INTRANET? OR LAN OR LANS OR WAN
              OR WANS OR WLAN? ? OR VLAN? ?
S2      14705   S1(7N)((PROTECT? OR SECUR? OR GUARD? OR FORTIF? OR SHIELD?-
             )(5N)(ACCESS? OR ENTRY OR ENTRIE? ? OR USE??? OR UTILI? OR US-
             ING))
S3       3588   S2(7N)(ENFORC? OR CONTROL? OR REGULAT? OR DIRECT? OR MANAG?
              OR ADMINISTRAT? OR SUSTAIN? OR ORDER??? OR MAINTAIN? OR SUPE-
             RVIS???)
S4     374666   (ORDER?()SET? ? OR SEQUEN? OR PATTERN? OR ORDER?OR SEQUENT-
             IAL? OR  SERIE?? OR SERIAL?? OR IN()ORDER? OR CONTIGU? OR  CO-
             NSECUT? OR SERIAT? OR STEPWISE? OR CONSECUT? OR ONE()AFTER(2W-
             )(OTHER OR ANOTHER))(5N)(LEVEL? OR STEP? ? OR STAGE? OR TIER??
              ? OR OPERATION? OR FUNCTION? OR COMMAND?)
S5      47231   S4(5N)(TIME? ? OR TIMING OR TEMPORAL? OR CLOCK? OR DURATIO-
             N? OR EVENT? OR SCHEDUL? OR OCCASION? OR DAY? ? OR HOUR? ? OR
             MINUTE? ? OR SECOND? ? OR PERIOD?)
S6      90467   S4:S5(7N)(SECOND? OR COUPLE OR 2ND OR 2 OR DUAL?? OR TWICE
             OR ANOTHER? OR TWO OR DIFFERENT OR PAIR OR MORE(2N)ONE OR ADD-
             ITIONAL)
S7      17781   S6(7N)(PERFORM? OR EXECUT? OR IMPLEMENT? OR OPERATE? ? OR -
             OPERATING OR ENACT? OR HANDL? OR (CARRY? OR CARRIE? ?)()OUT OR
              COMPLET? OR ENABL? OR ALLOW?)
S8      70957   (PRESELECT? OR PRE()SELECT? OR (SELECT? OR PICK??? OR CHOO-
             SE? OR DESIGNAT? OR CHOSEN OR IDENT?)()BEFORE? OR PREDETERMIN?
              OR PRE()(DETERMIN? OR SPECIF?))(5N)(ACCESS? OR ENTRY OR ENTR-
             IE? ? OR USE??? OR UTILI?)
S9     101478   (DELIVER? OR SEND??? OR SENT OR UPLOAD? OR DISTRIBUT? OR T-
             RANSFER? OR TRANSMI? OR BEAM??? OR LOAD??? OR POST??? ?)(5N)(-
             SEARCH? OR RESEARCH? OR RETRIEV? OR INQUIR? OR QUERY? OR QUER-
             IE? ? OR REQUEST? OR ASK???)
S10    211155   (RETRIEV? OR RECEIV??? OR ACCEPT? OR ACQUIR? OR OBTAIN? OR
             DOWNLOAD? OR FETCH??? OR ACCESS?)(5N)(SEARCH? OR RESEARCH? OR
             RETRIEV? OR INQUIR? OR QUERY? OR QUERIE? ? OR REQUEST? OR ASK-
             ???)
S11          6   S2:S3(100N)S7(100N)S8(100N)S9:S10
S12         15   S2:S3(100N)S4:S5(100N)S8(100N)S9:S10
S13         18   S11:S12
S14          5   AU=(KOVARIK V? OR KOVARIK, V?)
S15          3   (VINCENT OR VINCE OR VINNIE)(2N)KOVARIK
S16          0   S14:S15(100N)S1(100N)S2:S3
S17          0   S14:S15(100N)S4(100N)S8(100N)S9:S10
S18          0   S14:S15(100N)S1
File 348:EUROPEAN PATENTS 1978-2007/ 200732
         (c) 2007 European Patent Office
File 349:PCT FULLTEXT 1979-2007/UB=20070809UT=20070802
         (c) 2007 WIPO/Thomson
```

Full Text Pat. files

13/5,K/17 (Item 9 from file: 349)
DIALOG(R)File 349:PCT FULLTEXT
(c) 2007 WIPO/Thomson. All rts. reserv.

00571474 **Image available**
COMPUTER NETWORK INTRUSION DETECTION
DETECTION D'INTRUSION DANS UN RESEAU INFORMATIQUE
Patent Applicant/Assignee:
VISA INTERNATIONAL SERVICE ASSOCIATION,
DIEP Thanh A,
Inventor(s):
DIEP Thanh A,
Patent and Priority Information (Country, Number, Date):
Patent: WO 200034847 A1 20000615 (WO 0034847)
Application: WO 99US29080 19991207 (PCT/WO US9929080)
Priority Application: US 98208617 19981208
Designated States:
(Protection type is "patent" unless otherwise stated - for applications prior to 2004)
AE AL AM AT AU AZ BA BB BG BR BY CA CH CN CR CU CZ DE DK DM EE ES FI GB GD GE GH GM HR HU ID IL IN IS JP KE KG KP KR KZ LC LK LR LS LT LU LV MD MG MK MN MW MX NO NZ PL PT RO RU SD SE SG SI SK SL TJ TM TR TT TZ UA UG US UZ VN YU ZA ZW GH GM KE LS MW SD SL SZ TZ UG ZW AM AZ BY KG KZ MD RU TJ TM AT BE CH CY DE DK ES FI FR GB GR IE IT LU MC NL PT SE BF BJ CF CG CI CM GA GN GW ML MR NE SN TD TG
Main International Patent Class (v7): G06F-001/00
Publication Language: English
Fulltext Availability:
Detailed Description
Claims
Fulltext Word Count: 11423

English Abstract
Detecting harmful or illegal intrusions into a computer network or into restricted portions of a computer network uses statistical analysis to match user commands and program names with a template sequence. Discrete correlation matching and permutation matching are used to match sequences. The result of the match is input to a feature builder and then a modeler to produce a score. The score indicates possible intrusion. A sequence of user commands and program names and a template sequence of known harmful commands and program names from a set of such templates are retrieved. A closeness factor indicative of the similarity between the user command sequence and a template sequence is derived from comparing the two sequences. The user command sequence is compared to each template sequence in the set of templates thereby creating multiple closeness or similarity measurements. These measurements are examined to determine which sequence template is most similar to the user command sequence. A frequency feature associated with the user command sequence and the most similar template sequence is calculated. It is determined whether the user command sequence is a potential intrusion into restricted portions of the computer network by examining output from a modeler using the frequency feature as one input.

French Abstract
L'invention concerne la detection d'intrusions nuisibles ou illegales dans un reseau informatique ou dans des parties reservees dudit reseau, qui consiste a utiliser des analyses statistiques pour comparer des commandes d'utilisateur et des noms de programmes a une sequence modele. Une correspondance de correlation et une correspondance de permutation discretes servent a comparer des sequences. Le resultat de la correspondance est introduit dans un realisateur de caracteristiques,

puis dans un modeliseur pour etablir une cote, laquelle permet d'indiquer une intrusion possible. Une sequence de commandes d'utilisateur et de noms de programmes, ainsi qu'une sequence modele de commandes et de noms de programmes nuisibles provenant de tels modeles sont recherchees. Un facteur de proximite, indiquant la similitude entre la sequence de commandes d'utilisateur et la sequence modele, est deduit de la comparaison des deux sequences. La sequence de commandes d'utilisateur est comparee a chaque sequence modele de l'ensemble de modeles. On etablit ainsi plusieurs mesures de proximite ou de similitude. L'examen de ces mesures permet de determiner la sequence modele qui presente le plus de similitudes avec la sequence de commandes d'utilisateur. Une caracteristique de frequence, associee a la sequence de commandes d'utilisateur et a la sequence modele qui presente le plus de similitudes, est calculee. On determine si la sequence de commandes d'utilisateur constitue une intrusion potentielle dans des parties reservees du reseau informatique en examinant le resultat d'un modeliseur au moyen de la caracteristique de frequence en tant qu'une entree.

Fulltext Availability:
Detailed Description

Detailed Description
... set of templates is created and can be added to whenever a newly identified suspicious **command** sequence is discovered. The process of generating templates of command sequences is then complete.

Related...

...is analyzed, the program selects the first template from
1 4
template set 14, and **retrieves** the next template in the second iteration, as described below in step 5 1 0...

...Y selection can be based on other criteria such as frequency, importance, or length.

At **step** 506 input **sequence** X ...input sequence X`being analyzed
1 5
as shown in FIG. 5. Template Y' is **retrieved** at step 602. Examples of other features are the number of audit records processed for...

...all sequences entered by the same user during time period T. Preferably, the duration of **time** period T used in this **step** is greater than the **sequence** length of the input **sequence** from **step** 306.

io Thus, if the user input **sequence** contains **commands** and program names entered by a user over 30 minutes, time period T is preferably...

...program to calculate an average occurrence or frequency level dynamically without having to store and **retrieve** from memory the multiple values that would be needed to calculate a static average. A...

```
 Examination:      051130 A2 Date of request for examination: 20051005
 Change:           060517 A2 Title of invention (German) changed: 20060517
 Change:           060517 A2 Title of invention (English) changed: 20060517
 Change:           060517 A2 Title of invention (French) changed: 20060517
 Change:           061213 A2 Title of invention (German) changed: 20061213
 Change:           061213 A2 Title of invention (English) changed: 20061213
 Change:           061213 A2 Title of invention (French) changed: 20061213
 Grant:            070516 B1 Granted patent
LANGUAGE (Publication,Procedural,Application): English; English; English
FULLTEXT AVAILABILITY:
Available Text  Language   Update    Word Count
      CLAIMS A  (English)  200442      575
      CLAIMS B  (English)  200720      404
      CLAIMS B   (German)  200720      390
      CLAIMS B   (French)  200720      436
      SPEC A    (English)  200442     6252
      SPEC B    (English)  200720     5715
Total word count - document A         6828
Total word count - document B         6945
Total word count - documents A + B   13773
```

...SPECIFICATION phone carried by the user exists in registered specific area where the user makes a **request** for a video information **distribution** service to be provided and the traffic of the radio channel connected to the mobile phone carried by the **user** is lower than the **predetermined** threshold, video information about the specific area is distributed from the video contents server to the mobile phone based on push technology, so that the **user** can **securely** be **distributred** with, for example, video information of commercial, guidance or the like about the specific area...
...a predetermined time period, but displaying the distributed video information is restricted within the predetermined **time in order** to prevent the **function** of the mobile phone from be occupied with displaying the distributed video information. After the...

...SPECIFICATION phone carried by the user exists in registered specific area where the user makes a **request** for a video information **distribution** service to be provided and the traffic of the radio channel connected to the mobile phone carried by the **user** is lower than the **predetermined** threshold, video information about the specific area is distributed from the video contents server to the mobile phone based on push technology, so that the **user** can **securely** be **distributred** with, for example, video information of commercial, guidance or the like about the specific area...

...a predetermined time period, but displaying the distributed video information is restricted within the predetermined **time in order** to prevent the **function** of the mobile phone from be occupied with displaying the distributed video information. After the...

```
Set     Items   Description
S1   12454539   COMPUTER?(2N)(SYSTEM? ? OR SECUR?) OR NETWORK? OR COMPUTER?
              OR DISTRIBUT? OR ETHERNET? OR INTERNET OR INTRANET? OR LAN OR
              LANS OR WAN OR WANS OR WLAN? ? OR VLAN? ?
S2      22262   S1(7N)((PROTECT? OR SECUR? OR GUARD? OR FORTIF? OR SHIELD?-
             )(5N)(ACCESS? OR ENTRY? OR ENTRIE? ? OR ENTREE? OR USE??? OR -
             UTILI? OR USING))
S3       6211   S2(7N)(ENFORC? OR CONTROL? OR REGULAT? OR DIRECT? OR MANAG?
              OR ADMINISTRAT? OR SUSTAIN? OR ORDER??? OR MAINTAIN? OR SUPE-
             RVIS???)
S4     475945   (ORDER?()SET? ? OR SEQUEN? OR PATTERN? OR ORDER?OR SEQUENT-
             IAL? OR  SERIE?? OR SERIAL?? OR IN()ORDER? OR CONTIGU? OR  CO-
             NSECUT? OR SERIAT? OR STEPWISE? OR CONSECUT? OR ONE()AFTER(2W-
             )(OTHER OR ANOTHER))(5N)(LEVEL? OR STEP? ? OR STAGE? OR TIER??
              ? OR OPERATION? OR FUNCTION? OR COMMAND?)
S5      38489   S4(5N)(TIME? ? OR TIMING OR TEMPORAL? OR CLOCK? OR DURATIO-
             N? OR EVENT? OR SCHEDUL? OR OCCASION? OR DAY? ? OR HOUR? ? OR
             MINUTE? ? OR SECOND? ? OR PERIOD?)
S6      64248   S4:S5(7N)(SECOND? OR COUPLE OR 2ND OR 2 OR DUAL?? OR TWICE
             OR ANOTHER? OR TWO OR DIFFERENT OR PAIR OR MORE(2N)ONE OR ADD-
             ITIONAL)
S7       5797   S6(7N)(PERFORM? OR EXECUT? OR IMPLEMENT? OR OPERATE? ? OR -
             OPERATING OR ENACT? OR HANDL? OR (CARRY? OR CARRIE? ?)()OUT OR
              COMPLET? OR ENABL? OR ALLOW?)
S8       4102   (PRESELECT? OR PRE()SELECT? OR (SELECT? OR PICK??? OR CHOO-
             SE? OR DESIGNAT? OR CHOSEN OR IDENT?)()BEFORE? OR PREDETERMIN?
              OR PRE()(DETERMIN? OR SPECIF?))(5N)(ACCESS? OR ENTRY OR ENTR-
             IE? ? OR USE??? OR UTILI?)
S9     144801   (DELIVER? OR SEND??? OR SENT OR UPLOAD? OR DISTRIBUT? OR T-
             RANSFER? OR TRANSMI? OR BEAM??? OR LOAD??? OR POST??? ?)(5N)(-
             SEARCH? OR RESEARCH? OR RETRIEV? OR INQUIR? OR QUERY? OR QUER-
             IE? ? OR REQUEST? OR ASK???)
S10    489980   (RETRIEV? OR RECEIV??? OR ACCEPT? OR ACQUIR? OR OBTAIN? OR
             DOWNLOAD? OR FETCH??? OR ACCESS?)(5N)(SEARCH? OR RESEARCH? OR
             RETRIEV? OR INQUIR? OR QUERY? OR QUERIE? ? OR REQUEST? OR ASK-
             ???)
S11         0   S2:S3 AND S7 AND S8
S12         1   S2:S3 AND S4:S5 AND S8
S13         0   S7 AND S8 AND S9:S10
S14       150   AU=(KOVARIK V? OR KOVARIK, V?)
S15         0   (VINCENT OR VINCE OR VINNIE)(2N)KOVARIK
S16        21   S14 AND S1:S3
S17         0   S16 AND S4 AND S8
S18         0   S16 AND S9:S10
S19        15   RD S16  (unique items)
File   2:INSPEC 1898-2007/Aug W1
         (c) 2007 Institution of Electrical Engineers
File   6:NTIS 1964-2007/Aug W3
         (c) 2007 NTIS, Intl Cpyrght All Rights Res
File   8:Ei Compendex(R) 1884-2007/Aug W1
         (c) 2007 Elsevier Eng.  Info. Inc.
File  34:SciSearch(R) Cited Ref Sci 1990-2007/Aug W3
         (c) 2007 The Thomson Corp
File  35:Dissertation Abs Online 1861-2007/Jul
         (c) 2007 ProQuest Info&Learning
File  56:Computer and Information Systems Abstracts 1966-2007/Aug
         (c) 2007 CSA.
File  60:ANTE: Abstracts in New Tech & Engineer 1966-2007/Jul
         (c) 2007 CSA.
File  62:SPIN(R) 1975-2007/Jul W5
         (c) 2007 American Institute of Physics
```

Abstract Npl. files
* Nothing found

```
File  65:Inside Conferences 1993-2007/Aug 17
         (c) 2007 BLDSC all rts. reserv.
File  95:TEME-Technology & Management 1989-2007/Aug W2
         (c) 2007 FIZ TECHNIK
File  99:Wilson Appl. Sci & Tech Abs 1983-2007/Jul
         (c) 2007 The HW Wilson Co.
File 111:TGG Natl.Newspaper Index(SM) 1979-2007/Aug 13
         (c) 2007 The Gale Group
File 144:Pascal 1973-2007/Jul W5
         (c) 2007 INIST/CNRS
File 239:Mathsci 1940-2007/Sep
         (c) 2007 American Mathematical Society
File 256:TecInfoSource 82-2007/Nov
         (c) 2007 Info.Sources Inc
File 434:SciSearch(R) Cited Ref Sci 1974-1989/Dec
         (c) 2006 The Thomson Corp
File 583:Gale Group Globalbase(TM) 1986-2002/Dec 13
         (c) 2002 The Gale Group
```

```
Set     Items   Description
S1   21442996   COMPUTER?(2N)(SYSTEM? ? OR SECUR?) OR NETWORK? OR COMPUTER?
              OR DISTRIBUT? OR ETHERNET? OR INTERNET OR INTRANET? OR LAN OR
              LANS OR WAN OR WANS OR WLAN? ? OR VLAN? ?
S2     283082   S1(7N)((PROTECT? OR SECUR? OR GUARD? OR FORTIF? OR SHIELD?-
             )(5N)(ACCESS? OR ENTRY OR ENTRIE? ? OR USE??? OR UTILI? OR US-
             ING))
S3      84610   S2(7N)(ENFORC? OR CONTROL? OR REGULAT? OR DIRECT? OR MANAG?
              OR ADMINISTRAT? OR SUSTAIN? OR ORDER??? OR MAINTAIN? OR SUPE-
             RVIS???)
S4     307166   (ORDER?()SET? ? OR SEQUEN? OR PATTERN? OR ORDER?OR SEQUENT-
             IAL? OR  SERIE?? OR SERIAL?? OR IN()ORDER? OR CONTIGU? OR  CO-
             NSECUT? OR SERIAT? OR STEPWISE? OR CONSECUT? OR ONE()AFTER(2W-
             )(OTHER OR ANOTHER))(5N)(LEVEL? OR STEP? ? OR STAGE? OR TIER??
              ? OR OPERATION? OR FUNCTION? OR COMMAND?)
S5      23579   S4(5N)(TIME? ? OR TIMING OR TEMPORAL? OR CLOCK? OR DURATIO-
             N? OR EVENT? OR SCHEDUL? OR OCCASION? OR DAY? ? OR HOUR? ? OR
             MINUTE? ? OR SECOND? ? OR PERIOD?)
S6      33087   S4:S5(7N)(SECOND? OR COUPLE OR 2ND OR 2 OR DUAL?? OR TWICE
             OR ANOTHER? OR TWO OR DIFFERENT OR PAIR OR MORE(2N)ONE OR ADD-
             ITIONAL)
S7       4917   S6(7N)(PERFORM? OR EXECUT? OR IMPLEMENT? OR OPERATE? ? OR -
             OPERATING OR ENACT? OR HANDL? OR (CARRY? OR CARRIE? ?)()OUT OR
              COMPLET? OR ENABL? OR ALLOW?)
S8       9378   (PRESELECT? OR PRE()SELECT? OR (SELECT? OR PICK??? OR CHOO-
             SE? OR DESIGNAT? OR CHOSEN OR IDENT?)()BEFORE? OR PREDETERMIN?
              OR PRE()(DETERMIN? OR SPECIF?))(5N)(ACCESS? OR ENTRY OR ENTR-
             IE? ? OR USE??? OR UTILI?)
S9          0   S2:S3(100N)S7(100N)S8
S10         5   S2:S3(100N)S4(100N)S8
File 275:Gale Group Computer DB(TM) 1983-2007/Jul 24
         (c) 2007 The Gale Group
File 621:Gale Group New Prod.Annou.(R) 1985-2007/Aug 13
         (c) 2007 The Gale Group
File 636:Gale Group Newsletter DB(TM) 1987-2007/Aug 16
         (c) 2007 The Gale Group
File  16:Gale Group PROMT(R) 1990-2007/Aug 16
         (c) 2007 The Gale Group
File 160:Gale Group PROMT(R) 1972-1989
         (c) 1999 The Gale Group
File 148:Gale Group Trade & Industry DB 1976-2007/Aug 14
         (c)2007 The Gale Group
File 624:McGraw-Hill Publications 1985-2007/Aug 17
         (c) 2007 McGraw-Hill Co. Inc
File  15:ABI/Inform(R) 1971-2007/Aug 17
         (c) 2007 ProQuest Info&Learning
File 647:CMP  Computer Fulltext 1988-2007/Sep W2
         (c) 2007 CMP Media, LLC
File 674:Computer News Fulltext 1989-2006/Sep W1
         (c) 2006 IDG Communications
File 696:DIALOG Telecom. Newsletters 1995-2007/Aug 16
         (c) 2007 Dialog
File 369:New Scientist 1994-2007/Jul W5
         (c) 2007 Reed Business Information Ltd.
File 810:Business Wire 1986-1999/Feb 28
         (c) 1999 Business Wire
File 813:PR Newswire 1987-1999/Apr 30
         (c) 1999 PR Newswire Association Inc
File 610:Business Wire 1999-2007/Aug 17
         (c) 2007 Business Wire.
File 613:PR Newswire 1999-2007/Aug 17
```

Full Text
Npl. Files

(c) 2007 PR Newswire Association Inc

10/3,K/5 (Item 1 from file: 813)
DIALOG(R)File 813:PR Newswire
(c) 1999 PR Newswire Association Inc. All rts. reserv.

0877285 LA039
NOVELL LAUNCHES ITS NEXT GENERATION OPEN TRANSACTION PROCESSING MONITOR - TUXEDO SYSTEM 6.1

DATE: October 31, 1995 08:36 EST WORD COUNT: 1,163

...a fast and
efficient way to create event-based communications, enabling businesses
to trigger a **series** of processing **steps** across multiple applications in
response to **pre - specified** events;

-- Enhanced **network** **security** through **Access** **Control** Lists (ACLs),
which provide user or group-level authorization to individual TUXEDO
services.

TUXEDO is...

EAST Search History

Ref #	Hits	Search Query	DBs	Default Operator	Plurals	Time Stamp
		S74 and ((user or entity) near6 (secure or security or authorized or authorization or valid$6)	US-PGPUB; USPAT; USOCR; EPO; JPO; IBM_TDB	OR	ON	2007/08/11 21:15
		S74 and ((user or entity) near6 (secure or security or authorized or authorization or valid$6) near6 (request or initiat$ or ask$3 or query$3 or queries or inquir$3 or requisition) near6 ((pre ADJ determined) or (pre ADJ defined) or preselect$ or preset or preprogrammed or preplaced or presett$3 or preestablished or predetermined or predefned or predesignate$ or preloaded) near6 (compar$4 or comparative or compari$ or comparable or contrast) near6 (allow$3 or grant$3 or approv$2 or consent or permission or signoff or sign$3 adj off or permit$ or certif$))	US-PGPUB; USPAT; USOCR; EPO; JPO; IBM_TDB	OR	ON	2007/08/11 21:12
		S74 and (user or entity) near6 (secure or security or authorized or authorization or valid$6) near6 (request or initiat$ or ask$3 or query$3 or queries or inquir$3 or requisition) near6 ((pre ADJ determined) or (pre ADJ defined) or preselect$ or preset or preprogrammed or preplaced or presett$3 or preestablished or predetermined or predefned or predesignate$ or preloaded) near6 (compar$4 or comparative or compari$ or comparable or contrast) near6 (allow$3 or grant$3 or approv$2 or consent or permission or signoff or sign$3 adj off or permit$ or certif$)	US-PGPUB; USPAT; USOCR; EPO; JPO; IBM_TDB	OR	ON	2007/08/11 21:11
		"254457""	USPAT	OR	ON	2007/04/09 15:20
		S59 and compar$4 or equal$2 adj match$3 or correspond$3	USPAT	OR	ON	2007/04/09 14:03

EAST Search History

		receiv$3 or reception or accept$3 or get or getting or got or import$3 or download$3 or down adj load$3 or retriev$3 or fetch$3 or acquir$3 or obtain$3 or take or taking or took or upgrade or update or replace or change or transfer or transferr$3 or transference or transferrence or telnet or FTP$ or copy$3 or copied or copies or up adj (grade or date) or get or gets or getting	USPAT	OR	ON	2007/08/15 13:31
L1	0	(receiv$3) with (request) with (predetermined) with (node) with (information ADJ type) with (computer ADJ system ADJ function) with (temporal) with (access) with (compar$3) with (minimum) with (grant$3) with (prohibit$3) with (exeed$3) with (deny$3) with (completes).clm.	US-PGPUB; USPAT; USOCR; EPO; JPO; IBM_TDB	OR	ON	2007/08/16 15:39
L2	0	(receiv$3) and (request) and (predetermined) and (node) and (information ADJ type) and (computer ADJ system ADJ function) and (temporal) and (access) and (compar$3) and (minimum) and (grant$3) and (prohibit$3) and (exeed$3) and (deny$3) and (complet$3).clm.	US-PGPUB; USPAT; USOCR; EPO; JPO; IBM_TDB	OR	ON	2007/08/16 16:01
L3	265199	(receiv$3 and request and predetermined and node and (information ADJ type) and (computer ADJ system ADJ function) and temporal and access and compar$3 and minimum and grant$3 and prohibit$3 and exeed$3 and deny$3and complet$3).clm.	US-PGPUB; USPAT; USOCR; EPO; JPO; IBM_TDB	OR	ON	2007/08/16 16:04
L4	4033	(receiv$3 and request and predetermined and node and (information ADJ type) and (computer ADJ system ADJ function) and temporal and access and compar$3 and minimum and grant$3 and prohibit$3 and exeed$3 and deny$3and complet$3).clm. and ("713".clas. or "726".clas. or "380".clas.)	US-PGPUB; USPAT; USOCR; EPO; JPO; IBM_TDB	OR	ON	2007/08/16 16:05

EAST Search History

L5	74276	(receiv$3 and request and predetermined and node and (information ADJ type) and (computer ADJ system ADJ function) and temporal and access and compar$3 and minimum and grant$3 and prohibit$3 and exeed$3 and deny$3and complet$3).clm.	US-PGPUB; EPO; JPO; IBM_TDB	OR	ON	2007/08/16 16:04
L6	1735	(receiv$3 and request and predetermined and node and (information ADJ type) and (computer ADJ system ADJ function) and temporal and access and compar$3 and minimum and grant$3 and prohibit$3 and exeed$3 and deny$3and complet$3).clm. and ("713".clas. or "726".clas. or "380".clas.)	US-PGPUB; EPO; JPO; IBM_TDB	OR	ON	2007/08/16 16:28
L7	0	(receiv$3 with request with predetermined with node with (information ADJ type) with (computer ADJ system ADJ function) with temporal with access with compar$3 with minimum with grant$3 with prohibit$3 with exeed$3 with deny$3 with complet$3).clm.	US-PGPUB; EPO; JPO; IBM_TDB	OR	ON	2007/08/16 16:08
L8	0	((higher ADJ level) and node and arrang$3 and (tree ADJ hierarchy) and interface and receiv$3 and request and enttity and predetermined and access and (predetermined ADJ access ADJ table) and process$3 and den$4). clm.	US-PGPUB; EPO; JPO; IBM_TDB	OR	ON	2007/08/16 16:15
L9	0	((higher ADJ level) with node with arrang$3 with (tree ADJ hierarchy) with interface with receiv$3 with request with enttity with predetermined with access with (predetermined ADJ access ADJ table) with process$3 with den$4). clm.	US-PGPUB; EPO; JPO; IBM_TDB	OR	ON	2007/08/16 16:18

EAST Search History

L10	0	((higher ADJ level) with node with arrang$3 with (tree ADJ hierarchy) with interface with receiv$3 with request with enttity with predetermined with access with (predetermined ADJ access ADJ table) with process$3 with den$4 with minimum with updat$3 with aggregation with compar$6).clm.	US-PGPUB; EPO; JPO; IBM_TDB	OR	ON	2007/08/16 16:19
L11	0	((higher ADJ level) and node and arrang$3 and (tree ADJ hierarchy) and interface and receiv$3 and request and enttity and predetermined and access and (predetermined ADJ access ADJ table) and process$3 and den$4 and minimum and updat$3 and aggregation and compar$6).clm.	US-PGPUB; EPO; JPO; IBM_TDB	OR	ON	2007/08/16 16:22
L12	26423	"713".clas. "726".clas. "380".clas.	US-PGPUB; EPO; JPO; IBM_TDB	OR	ON	2007/08/16 16:23
L13	0	8 and 12	US-PGPUB; EPO; JPO; IBM_TDB	OR	ON	2007/08/16 16:23
L14	0	9 and 12	US-PGPUB; EPO; JPO; IBM_TDB	OR	ON	2007/08/16 16:23
L15	0	10 and 12	US-PGPUB; EPO; JPO; IBM_TDB	OR	ON	2007/08/16 16:23
L16	0	11 and 12	US-PGPUB; EPO; JPO; IBM_TDB	OR	ON	2007/08/16 16:23
L17	3608	709/229.ccls. or 713/201.ccls. or 713/166.ccls. or 726/23.ccls. or 709/219.ccls.	US-PGPUB; EPO; JPO; IBM_TDB	OR	ON	2007/08/16 16:29
L18	0	17 and 1	US-PGPUB; EPO; JPO; IBM_TDB	OR	ON	2007/08/16 16:29
L19	0	17 and 2	US-PGPUB; EPO; JPO; IBM_TDB	OR	ON	2007/08/16 16:29
L20	270	17 and 3	US-PGPUB; EPO; JPO; IBM_TDB	OR	ON	2007/08/16 16:30
L21	45	17 and 4	US-PGPUB; EPO; JPO; IBM_TDB	OR	ON	2007/08/16 16:30

EAST Search History

L22	270	17 and 5	US-PGPUB; EPO; JPO; IBM_TDB	OR	ON	2007/08/16 16:30
L23	45	17 and 6	US-PGPUB; EPO; JPO; IBM_TDB	OR	ON	2007/08/16 16:31
S1	27	"6014628"	US-PGPUB; USPAT	OR	ON	2007/04/03 07:42
S2	3	"7020717"	US-PGPUB; USPAT	OR	ON	2007/04/03 07:44
S3	2	"7126470"	US-PGPUB; USPAT	OR	ON	2007/04/03 07:48
S4	19	"5733418"	US-PGPUB; USPAT	OR	ON	2007/04/03 10:21
S5	1	"20020138322"	US-PGPUB; USPAT	OR	ON	2007/04/03 11:41
S6	22	"6023765"	US-PGPUB; USPAT	OR	ON	2007/04/03 16:51
S7	10	"5,429,736"	US-PGPUB; USPAT	OR	ON	2007/04/04 08:01
S8	3	"0044655"	US-PGPUB; USPAT	OR	ON	2007/04/04 08:02
S9	1	2004/0044655	US-PGPUB; USPAT	OR	ON	2007/04/04 08:02
S10	1	"20040044655"	US-PGPUB; USPAT	OR	ON	2007/04/04 10:15
S11	0	wo03/088018	US-PGPUB; USPAT	OR	ON	2007/04/04 10:16
S12	0	wo03088018	US-PGPUB; USPAT	OR	ON	2007/04/04 10:16
S13	1	"03088018"	US-PGPUB; USPAT	OR	ON	2007/04/04 10:17
S14	6	"088018"	US-PGPUB; USPAT	OR	ON	2007/04/04 10:18
S15	0	03/088018	US-PGPUB; USPAT	OR	ON	2007/04/04 10:18
S16	0	03/088018	US-PGPUB; USPAT	OR	ON	2007/04/04 10:22
S17	0	wo03/088018	US-PGPUB; USPAT; USOCR; FPRS; EPO; JPO; DERWENT; IBM_TDB	OR	ON	2007/04/04 10:23

EAST Search History

S18	0	wo03088018	US-PGPUB; USPAT; USOCR; FPRS; EPO; JPO; DERWENT; IBM_TDB	OR	ON	2007/04/04 10:23
S19	3	"03088018"	US-PGPUB; USPAT; USOCR; FPRS; EPO; JPO; DERWENT; IBM_TDB	OR	ON	2007/04/04 10:24
S20	2	"20040044655"	US-PGPUB; USPAT; USOCR; FPRS; EPO; JPO; DERWENT; IBM_TDB	OR	ON	2007/04/05 16:19
S21	0	713/201.CCLS.	US-PGPUB; USPAT; USOCR; FPRS; EPO; JPO; DERWENT; IBM_TDB	OR	ON	2007/04/05 16:22
S22	0	713/201.ccls.	US-PGPUB; USPAT; USOCR; FPRS; EPO; JPO; DERWENT; IBM_TDB	OR	ON	2007/04/05 16:22
S23	415	713/166.ccls.	US-PGPUB; USPAT; USOCR; FPRS; EPO; JPO; DERWENT; IBM_TDB	OR	ON	2007/04/05 16:25
S24	12	"6334121"	US-PGPUB; USPAT; USOCR; FPRS; EPO; JPO; DERWENT; IBM_TDB	OR	ON	2007/04/05 16:29
S25	8	("6334121").URPN.	USPAT	OR	ON	2007/04/05 16:55

EAST Search History

S26	23	"6345361"	USPAT	OR	ON	2007/04/05 16:56
S27	22	("6345361").URPN.	USPAT	OR	ON	2007/04/05 17:13
S28	12	"6405202"	USPAT	OR	ON	2007/04/09 08:09
S29	26	"6408391"	USPAT	OR	ON	2007/04/09 08:28
S30	9	"6446206"	USPAT	OR	ON	2007/04/09 08:43
S31	10	"6446077"	USPAT	OR	ON	2007/04/09 09:19
S32	3	"6453418"	USPAT	OR	ON	2007/04/09 11:28
S33	221	726/23.ccls.	USPAT	OR	ON	2007/04/09 15:19
S34	100	S33 and (receiving and request and computer and system)	USPAT	OR	ON	2007/04/09 11:35
S35	63	S33 and (temporal or (time and interval))	USPAT	OR	ON	2007/04/09 11:35
S36	5	("20010047420" | "5974496" | "6529706" | "6741841" | "6904449").PN.	US-PGPUB; USPAT; USOCR	OR	ON	2007/04/09 11:37
S37	1	("2001/0047420").URPN.	USPAT	OR	ON	2007/04/09 11:38
S38	25	("6484203").URPN.	USPAT	OR	ON	2007/04/09 12:25
S39	0	("7200656").URPN.	USPAT	OR	ON	2007/04/09 12:26
S40	0	("7200656").URPN.	USPAT	OR	ON	2007/04/09 12:26
S41	0	("7200656").URPN.	USPAT	OR	ON	2007/04/09 12:26
S42	10	S33 and (temporal)	USPAT	OR	ON	2007/04/09 12:28
S43	5	("6826697").URPN.	USPAT	OR	ON	2007/04/09 13:20
S44	0	("7181733").URPN.	USPAT	OR	ON	2007/04/09 13:21
S45	165	S33 and ((request and (user or entity) and in and computer and system) or (receiving and (user or entity) and in and computer and system))	USPAT	OR	ON	2007/04/09 13:26
S46	14	S33 and ((request same (user or entity) same in same computer same system) or (receiving same (user or entity) same in same computer same system))	USPAT	OR	ON	2007/04/09 13:26
S47	76	S45 and ((predetermined and access and level) or (minimum and access and level))	USPAT	OR	ON	2007/04/09 13:28
S48	5	S47 and ((temporal and access and pattern) or (temporal))	USPAT	OR	ON	2007/04/09 13:30
S49	38	("6324647").URPN.	USPAT	OR	ON	2007/04/09 13:30
S50	38	("6324647").URPN.	USPAT	OR	ON	2007/04/09 13:31
S51	0	("7178166").URPN.	USPAT	OR	ON	2007/04/09 13:40
S52	2739	709/219.ccls.	USPAT	OR	ON	2007/04/09 13:42

EAST Search History

S53	599	S52 and (receiving and request and computer and system and entity)	USPAT	OR	ON	2007/04/09 13:43
S54	239	S53 and ((predetermined and access and entity) and (minimum and access level))	USPAT	OR	ON	2007/04/09 13:45
S55	451	S53 and ((predetermined and access and entity) or (minimum and access and level) or (authorization) or (authentication))	USPAT	OR	ON	2007/04/09 13:46
S56	15	S55 and ((temporal) or (temporal and access and pattern))	USPAT	AND	ON	2007/04/09 13:52
S57	15	S55 and ((temporal) or (temporal and access and pattern))	USPAT	OR	ON	2007/04/09 13:55
S58	3149461	receiv$3 or accept$3 or get or getting or got or import$3 or download$3 or down adj load$3 or retriev$3 or fetch$3 or acquir$3 or obtain$3	USPAT	OR	ON	2007/04/09 14:13
S59	3125668	S58 and (Analyze, Authority, hierarchy, limit$5 modification, restrict$3 or access$3 or secur$3 or authori$6 or right or privilege or unauthori$6 or verif$7 or entitl$5 or recogni$4 or protect$3 or control$3 or safeguard$3 OR confine or confining or confined or filter$3 or lock$3 access control, access levels, access rights, access privileges (authority role, position, job, rank) adj profile, tier authority clearances, need to know,view rights role-based access control (RBAC) firewall, fire adj wall, screening router, security agent, security interface authenti$6, confirm$5, substantiat$3, valid$5 or identif$7 or phras or code or entitl$5 or recogni$4 or access$3 password or pass adj word secur$3 or gatekeep$3 certif$6 or compar$4)	USPAT	OR	ON	2007/04/09 13:58
S60	2051	709/229.ccls.	USPAT	OR	ON	2007/04/09 14:15
S61	2050	S60 and (receiving and request in computer and system)	USPAT	OR	ON	2007/04/09 14:14

EAST Search History

S62	1049	S61 and ((authorization) or (authentication) or (pretdetermined and access and level) or (minimum and access and level))	USPAT	OR	ON	2007/04/09 14:19
S63	0	"10254457"	USPAT	OR	ON	2007/04/09 15:19
S64	8	"254457"	USPAT	OR	ON	2007/04/11 07:34
S65	1	"0044655"	USPAT	OR	ON	2007/04/11 07:35
S66	0	"20040044655"	USPAT	OR	ON	2007/04/11 07:35
S67	1	"2004/0044655"	USPAT	OR	ON	2007/04/11 07:35
S68	1	2004/0044655	USPAT	OR	ON	2007/04/11 07:36
S69	0	"20040044655"	USPAT	OR	ON	2007/04/11 07:36
S70	1	"20040044655"	US-PGPUB; USPAT	OR	ON	2007/04/11 07:36
S71	104635	(temporal)	US-PGPUB; USPAT; USOCR; EPO; JPO; IBM_TDB	OR	ON	2007/08/11 19:57
S72	14825	S71 and (secure or security or authorized or authorize)	US-PGPUB; USPAT; USOCR; EPO; JPO; IBM_TDB	OR	ON	2007/08/11 19:59
S73	11547	S72 and (access or (access ADJ control) or access$ble or entry or entrance)	US-PGPUB; USPAT; USOCR; EPO; JPO; IBM_TDB	OR	ON	2007/08/11 20:14
S74	57343	(sequence or sequenced or ordered or order or successive or interval or time temporal) ADJ (access or (access ADJ control) or entry or validation or permission)	US-PGPUB; USPAT; USOCR; EPO; JPO; IBM_TDB	OR	ON	2007/08/11 20:26
S75	438457	(sequence or sequenced or ordered or order or successive or interval or time temporal) with (access or (access ADJ control) or entry or validation or permission)	US-PGPUB; USPAT; USOCR; EPO; JPO; IBM_TDB	OR	ON	2007/08/11 20:25
S76	235020	(sequence or sequenced or ordered or order or successive or interval or time temporal) near3 (access or (access ADJ control) or entry or validation or permission)	US-PGPUB; USPAT; USOCR; EPO; JPO; IBM_TDB	OR	ON	2007/08/11 20:25

EAST Search History

S77	0	S74 and ((user or entity) near6 (secure or security or authorized or authorization or valid$6) near6 (request or initiat$ or ask$3 or query$3 or queries or inquir$3 or requisition) near6 ((pre ADJ determined) or (pre ADJ defined) or preselect$ or preset or preprogrammed or preplaced or presett$3 or preestablished or predetermined or predefned or predesignate$ or preloaded) near6 (compar$4 or comparative or compari$ or comparable or contrast) near6 (allow$3 or grant$3 or approv$2 or consent or permission or signoff or sign$3 adj off or permit or permiting or permitt or certif$))	US-PGPUB; USPAT; USOCR; EPO; JPO; IBM_TDB	OR	ON	2007/08/11 21:18
S78	0	S74 and ((user or entity) near6 (secure or security or authorized or authorization or valid$6) near6 (request or initiat$ or ask$3 or query$3 or queries or inquir$3 or requisition) near6 ((pre ADJ determined) or (pre ADJ defined) or preselect$ or preset or preprogrammed or preplaced or presett$3 or preestablished or predetermined or predefned or predesignate$ or preloaded) near6 (compar$4 or comparative or compari$ or comparable or contrast))	US-PGPUB; USPAT; USOCR; EPO; JPO; IBM_TDB	OR	ON	2007/08/11 21:14
S79	0	S74 and ((user or entity) near6 (secure or security or authorized or authorization or valid$6) near6 (request or initiat$ or ask$3 or query$3 or queries or inquir$3 or requisition) near6 ((pre ADJ determined) or (pre ADJ defined) or preselect$ or preset or preprogrammed or preplaced or presett$3 or preestablished or predetermined or predefned or predesignate$ or preloaded) near6 (compar$4 or comparable or contrast))	US-PGPUB; USPAT; USOCR; EPO; JPO; IBM_TDB	OR	ON	2007/08/11 21:15

EAST Search History

S80	10765	S74 and ((user or entity) near6 (secure or security or authorized or authorization or valid$6))	US-PGPUB; USPAT; USOCR; EPO; JPO; IBM_TDB	OR	ON	2007/08/11 21:15
S81	10098	S80 and (request or initiat$ or ask$3 or query$3 or queries or inquir$3 or requisition)	US-PGPUB; USPAT; USOCR; EPO; JPO; IBM_TDB	OR	ON	2007/08/11 21:15
S82	6968	S81 and ((pre ADJ determined) or (pre ADJ defined) or preselect$ or preset or preprogrammed or preplaced or presett$3 or preestablished or predetermined or predefned or predesignate$ or preloaded)	US-PGPUB; USPAT; USOCR; EPO; JPO; IBM_TDB	OR	ON	2007/08/11 21:16
S83	5799	S82 and (compar$4 or comparative or compari$ or comparable or contrast)	US-PGPUB; USPAT; USOCR; EPO; JPO; IBM_TDB	OR	ON	2007/08/11 21:17
S84	5722	S83 and (allow$3 or grant$3 or approv$2 or consent or permission or signoff or sign$3 adj off or permit or permiting or permitt or certif$)	US-PGPUB; USPAT; USOCR; EPO; JPO; IBM_TDB	OR	ON	2007/08/11 21:18
S85	54156	"713"/.clas. or "726"/.clas. or "380"/.clas.	US-PGPUB; USPAT; USOCR; EPO; JPO; IBM_TDB	OR	ON	2007/08/11 21:20
S86	1058	S84 and S85	US-PGPUB; USPAT; USOCR; EPO; JPO; IBM_TDB	OR	ON	2007/08/11 21:24
S87	101	S86 and temporal	US-PGPUB; USPAT; USOCR; EPO; JPO; IBM_TDB	OR	ON	2007/08/16 15:03
S88	21	"6711615"	USPAT	OR	ON	2007/08/15 13:31

UNITED STATES PATENT AND TRADEMARK OFFICE

UNITED STATES DEPARTMENT OF COMMERCE
United States Patent and Trademark Office
Address: COMMISSIONER FOR PATENTS
P.O. Box 1450
Alexandria, Virginia 22313-1450
www.uspto.gov

APPLICATION NUMBER	FILING or 371(c) DATE	GRP ART UNIT	FIL FEE REC'D	ATTY.DOCKET.NO
10/798,074	03/11/2004	2134	770	7162-0110

CONFIRMATION NO. 5321

REPLACEMENT FILING RECEIPT

39207
SACCO & ASSOCIATES, PA
P.O. BOX 30999
PALM BEACH GARDENS, FL33420-0999

Date Mailed: 07/16/2007

Receipt is acknowledged of this non-provisional patent application. The application will be taken up for examination in due course. Applicant will be notified as to the results of the examination. Any correspondence concerning the application must include the following identification information: the U.S. APPLICATION NUMBER, FILING DATE, NAME OF APPLICANT, and TITLE OF INVENTION. Fees transmitted by check or draft are subject to collection. Please verify the accuracy of the data presented on this receipt. **If an error is noted on this Filing Receipt, please write to the Office of Initial Patent Examination's Filing Receipt Corrections. Please provide a copy of this Filing Receipt with the changes noted thereon. If you received a "Notice to File Missing Parts" for this application, please submit any corrections to this Filing Receipt with your reply to the Notice. When the USPTO processes the reply to the Notice, the USPTO will generate another Filing Receipt incorporating the requested corrections**

Applicant(s)

Vincent Joseph Kovarik JR., Grant, FL;

Assignment For Published Patent Application

Harris Corporation, Melbourne, FL

Power of Attorney: The patent practitioners associated with Customer Number 39207

Domestic Priority data as claimed by applicant

Foreign Applications

Permission to Access - A proper **Authorization to Permit Access to Application by Participating Offices** (PTO/SB/39 or its equivalent) has been received by the USPTO.

If Required, Foreign Filing License Granted: 05/27/2004

The country code and number of your priority application, to be used for filing abroad under the Paris Convention, is **US10/798,074**

Projected Publication Date: Not Applicable

Non-Publication Request: No

Early Publication Request: No

Title

Enforcing computer security utilizing an adaptive lattice mechanism

Preliminary Class

713

PROTECTING YOUR INVENTION OUTSIDE THE UNITED STATES

Since the rights granted by a U.S. patent extend only throughout the territory of the United States and have no effect in a foreign country, an inventor who wishes patent protection in another country must apply for a patent in a specific country or in regional patent offices. Applicants may wish to consider the filing of an international application under the Patent Cooperation Treaty (PCT). An international (PCT) application generally has the same effect as a regular national patent application in each PCT-member country. The PCT process **simplifies** the filing of patent applications on the same invention in member countries, but **does not result** in a grant of "an international patent" and does not eliminate the need of applicants to file additional documents and fees in countries where patent protection is desired.

Almost every country has its own patent law, and a person desiring a patent in a particular country must make an application for patent in that country in accordance with its particular laws. Since the laws of many countries differ in various respects from the patent law of the United States, applicants are advised to seek guidance from specific foreign countries to ensure that patent rights are not lost prematurely.

Applicants also are advised that in the case of inventions made in the United States, the Director of the USPTO must issue a license before applicants can apply for a patent in a foreign country. The filing of a U.S. patent application serves as a request for a foreign filing license. The application's filing receipt contains further information and guidance as to the status of applicant's license for foreign filing.

Applicants may wish to consult the USPTO booklet, "General Information Concerning Patents" (specifically, the section entitled "Treaties and Foreign Patents") for more information on timeframes and deadlines for filing foreign patent applications. The guide is available either by contacting the USPTO Contact Center at 800-786-9199, or it can be viewed on the USPTO website at http://www.uspto.gov/web/offices/pac/doc/general/index.html.

For information on preventing theft of your intellectual property (patents, trademarks and copyrights), you may wish to consult the U.S. Government website, http://www.stopfakes.gov. Part of a Department of Commerce initiative, this website includes self-help "toolkits" giving innovators guidance on how to protect intellectual property in specific countries such as China, Korea and Mexico. For questions regarding patent enforcement issues, applicants may call the U.S. Government hotline at 1-866-999-HALT (1-866-999-4158).

LICENSE FOR FOREIGN FILING UNDER

Title 35, United States Code, Section 184

Title 37, Code of Federal Regulations, 5.11 & 5.15

GRANTED

The applicant has been granted a license under 35 U.S.C. 184, if the phrase "IF REQUIRED, FOREIGN FILING LICENSE GRANTED" followed by a date appears on this form. Such licenses are issued in all applications where the conditions for issuance of a license have been met, regardless of whether or not a license may be required as set forth in 37 CFR 5.15. The scope and limitations of this license are set forth in 37 CFR 5.15(a) unless an earlier license has been issued under 37 CFR 5.15(b). The license is subject to revocation upon written notification. The date indicated is the effective date of the license, unless an earlier license of similar scope has been granted under 37 CFR 5.13 or 5.14.

This license is to be retained by the licensee and may be used at any time on or after the effective date thereof unless it is revoked. This license is automatically transferred to any related applications(s) filed under 37 CFR 1.53(d). This license is not retroactive.

The grant of a license does not in any way lessen the responsibility of a licensee for the security of the subject matter as imposed by any Government contract or the provisions of existing laws relating to espionage and the national security or the export of technical data. Licensees should apprise themselves of current regulations especially with respect to certain countries, of other agencies, particularly the Office of Defense Trade Controls, Department of State (with respect to Arms, Munitions and Implements of War (22 CFR 121-128)); the Bureau of Industry and Security, Department of Commerce (15 CFR parts 730-774); the Office of Foreign AssetsControl, Department of Treasury (31 CFR Parts 500+) and the Department of Energy.

NOT GRANTED

No license under 35 U.S.C. 184 has been granted at this time, if the phrase "IF REQUIRED, FOREIGN FILING LICENSE GRANTED" DOES NOT appear on this form. Applicant may still petition for a license under 37 CFR 5.12, if a license is desired before the expiration of 6 months from the filing date of the application. If 6 months has lapsed from the filing date of this application and the licensee has not received any indication of a secrecy order under 35 U.S.C. 181, the licensee may foreign file the application pursuant to 37 CFR 5.15(b).

RECEIVED
CENTRAL FAX CENTER
JUL 1 2 2007

IN THE UNITED STATES PATENT AND TRADEMARK OFFICE

Appln. No.	:	10/798,074	Confirmation No.	:	5321
First Named Inventor	:	KOVARIK, Jr.			
Filed	:	March 11, 2004			
TC/A.U.	:	2109			
Examiner	:	SHAIFER HARRIMAN			
Docket	:	7162-0110			
Customer No.	:	39207			

Via Facsimile 571-273-8300
Mail Stop Amendment
Commissioner of Patents
P.O. Box 1450
Alexandria, VA 22313-1450

AMENDMENT

Sir:

In response to the Office Action dated April 18, 2007, please amend the above-identified application as follows:

Amendments to the Claims are reflected in the listing of claims which begin on page 2 of this paper.

Remarks/arguments begin on page 7 of this paper.

Certificate of Transmission
I hereby certify that this correspondence is being facsimile transmitted to the United States Patent and Trademark Office, Fax No. (571)273-8300 on 7-12-07. Typed or printed name of person signing this certificate: ROBERT J. SACCO

{00016049;2}

Amendments to the Claims:

This listing of claims will replace all prior versions, and listings, of claims in the application:

Listing of Claims:

1. (Currently Amended) A method for secure access to a computer system, comprising the steps of:

receiving in said computer system a request from an entity with a predetermined access level for access to a first base node representing at least one of an information type and a computer system function;

determining if said access request completes a prohibited temporal access pattern for said entity; ~~and~~

comparing a minimum access level established for said first base node to said predetermined access level; ~~and~~

granting said access request only if it does not complete a prohibited temporal access pattern for said entity, and said minimum access level for said first base node does not exceed said predetermined access level~~.~~; and

denying said request if said access request completes a prohibited temporal access pattern for said entity.

2. (Cancelled)

3. (Original) The method according to claim 1, further comprising the step of denying said request if said minimum access level for said first base node exceeds said predetermined access level for said entity.

4. (Original) The method according to claim 1, further comprising the steps of:

logically organizing said computer system in the form of a tree hierarchy having a plurality of leaf nodes and higher-level nodes;

PAGE 4/14 * RCVD AT 7/12/2007 1:10:01 PM [Eastern Daylight Time] * SVR:USPTO-EFXRF-3/10 * DNIS:2738300 * CSID:5616262681 * DURATION (mm-ss):04-08

defining a plurality of said base nodes as comprising respectively a plurality of leaf nodes of said tree hierarchy; and

defining said higher-level nodes as aggregations of said base nodes.

5. (Original) The method according to claim 4 further comprising the step of identifying within said hierarchy any higher-level nodes that are aggregations comprising said first base node.

6. (Original) The method according to claim 5, further comprising the step of identifying within said hierarchy any nodes that comprise children of any generation of said higher-level nodes that are aggregations comprising said first base node.

7. (Original) The method according to claim 6, further comprising the step of updating a minimum required entity access level for any base nodes that comprise children of any generation of said higher-level nodes that are aggregations comprising said first base node.

8. (Original) The method according to claim 7, wherein said updating step further comprises the steps of:

comparing said entity's predetermined access level against the minimum required access level of said higher-level nodes that are aggregations comprising said first base node; and

updating a minimum required access level of any said base node that is also a member of any aggregation comprising said first base node if a minimum required access level for said higher-level node comprising said aggregation has a required access level that is higher than said entity's predetermined access level.

9. (Original) The method according to claim 1, further comprising the steps of:

comparing said entity's predetermined access level against the minimum required access level of at least one higher-level node that is an aggregation of base nodes including said first base node; and

PAGE 5/14 * RCVD AT 7/12/2007 1:10:01 PM [Eastern Daylight Time] * SVR:USPTO-EFXRF-3/10 * DNIS:2738300 * CSID:5616262681 * DURATION (mm-ss):04-08

updating a minimum required access level of any said base node that is also a member of any aggregation comprising said first base node if a minimum required access level for said higher-level node comprising said aggregation has a required access level that is higher than said entity's predetermined access level.

10. (Currently Amended) A method for restricting access to a computer system having a plurality of logical base nodes representing at least one of an information type and a computer system function, and a plurality of higher-level nodes arranged together with said base nodes in the form of a tree hierarchy, comprising the steps of:

receiving in said computer system a request from an entity with a predetermined access level for access to a first base node;

determining if said access request completes a prohibited temporal access pattern for said entity; ~~and~~

comparing a minimum access level established for said first base node to said predetermined access level; ~~and~~

granting said access request only if it does not complete a prohibited temporal access pattern for said entity, and said minimum access level for said first base node does not exceed said predetermined access level~~.~~; and

denying said request if said access request completes a prohibited temporal access pattern for said entity.

11. (Currently Amended) A secure computer system comprising:

a plurality of logical base nodes representing at least one of an information type and a computer system function;

a plurality of higher-level nodes arranged together with said base nodes in the form of a tree hierarchy;

a computer system interface capable of receiving a request from an entity with a predetermined access level for access to a first base node;

a temporal access table;

processing means programmed for comparing said access request to said temporal access table to determine if said access request completes a prohibited temporal access pattern for said entity, and for comparing a minimum access level established for said first base node to said predetermined access level; and

wherein said processing means denies said request if said access request completes a prohibited temporal access pattern for said entity and grants said access request only if it does not complete a prohibited temporal access pattern for said entity, and said minimum access level for said first base node does not exceed said predetermined access level.

12. (Cancelled)

13. (Original) The secure computer system according to claim 11, wherein said processing means denies said request if said minimum access level for said first base node exceeds said predetermined access level for said entity.

14. (Original) The secure computer system according to claim 11 wherein said higher-level nodes are aggregations of said base nodes.

15. (Original) The secure computer system according to claim 14 wherein said processing means identifies within said hierarchy any higher-level nodes that are aggregations comprising said first base node.

16. (Original) The secure computer system according to claim 15 wherein said computer processing means identifies within said hierarchy any nodes that comprise children of any generation of said higher-level nodes that are aggregations comprising said first base node.

17. (Original) The secure computer system according to claim 16 wherein said processing means updates a minimum required entity access level for any base nodes that comprise children of any generation of said higher-level nodes that are aggregations comprising said first base node.

18. (Original) The secure computer system according to claim 17 wherein said processing means compares said entity's predetermined access level against the minimum required access level of said higher-level nodes that are aggregations comprising said first base node; and

automatically updates a minimum required access level of any said base node that is also a member of any aggregation comprising said first base node if a minimum required access level for said higher-level node comprising said aggregation has a required access level that is higher than said entity's predetermined access level.

19. (Original) The secure computer system according to claim 11 wherein said processing means compares said entity's predetermined access level against the minimum required access level of at least one higher-level node that is an aggregation of base nodes including said first base node; and

updates a minimum required access level of any said base node that is also a member of any aggregation comprising said first base node if a minimum required access level for said higher-level node comprising said aggregation has a required access level that is higher than said entity's predetermined access level.

PAGE 8/14 * RCVD AT 7/12/2007 1:10:01 PM [Eastern Daylight Time] * SVR:USPTO-EFXRF-3/10 * DNIS:2738300 * CSID:5616262681 * DURATION (mm-ss):04-08

Remarks/Arguments

These remarks are in response to the Office Action dated April 18, 2007. This reply is timely filed. At the time of the Office Action, claims 1-19 were pending in the application. Claims 1, 10, and 11-19 were rejected under 35 U.S.C. §101. Claims 1-9 and 10-19 have been rejected under 35 U.S.C. 102(e). The rejections are set out in more detail below.

I. Claim Rejections Under 35 U.S.C. §101

Claims 1, 10, and 11-19 were rejected under 35 U.S.C. §101, citing the claimed invention is directed to non-statutory subject matter. In this regard, the Examiner states that the subject matter recited in independent claims 1, 10, and 11 lacks a practical application since the subject matter fails to produce a useful, concrete, and tangible result. More specifically, the Examiner notes that the claimed subject matter provides for the granting of an entity's request if and only if, the entity doesn't complete a temporal access pattern, and the entity's predetermined access level meets the minimum access level of the first base node. The Examiner asserts that this conditional statement yields a tangible result only if access is granted, and therefore makes for a non-tangible result. In response, Applicants have amended the subject matter of independent claims 1 and 10 to include the following conditional statement: "denying said request if said access request completes a prohibited temporal access pattern for said entity." Applicants have also amended the subject matter of independent claim 11 to include the following phrase: "wherein said processing means denies said request if said access request completes a prohibited temporal access pattern for said entity". Applicants believe that the currently amended independent claims 1, 10, 11 overcome the Examiners rejection under 35 U.S.C. §101.

II. Brief Review of Applicants' Invention

Prior to addressing the Examiner's rejections on the art, a brief review of the Applicants' invention is appropriate. The invention relates to a method and apparatus

PAGE 9/14 * RCVD AT 7/12/2007 1:10:01 PM [Eastern Daylight Time] * SVR:USPTO-EFXRF-3/10 * DNIS:2738300 * CSID:5616262681 * DURATION (mm-ss):04-08

for using an adaptive lattice mechanism to enforce computer security. *See* paragraph [0023]. Generally, the method involves receiving in the computer system a request from an entity. *See* paragraphs [0009], [0033] and FIG. 6. The entity can be a user or a process and can have a predetermined access authorization level for access to a first base node representing an information type or a computer system function. *See* paragraph [0009]. The method also involves determining if the access request completes a prohibited temporal access pattern for the entity. *See* paragraphs [0009], [0033] and FIG. 6.

In this regard, it should be appreciated that a temporal access pattern is defined by a temporal relation between two or more nodes. *See* paragraph [0028]. A temporal relation is an inter-propositional relation that communicates the ordering in time of events. *See* paragraph [0028] and FIG. 1. For example, a prohibited temporal access pattern of a node A is defined by a temporal relation between an item N_1 and an item N_2, e.g., $N_1 \rightarrow N_2$. Thus, a temporal ordering at node A exists that the item N_1 is accessed before the item N_2. So, for the security policy associated with node A to be activated, not only must the item N_1 and item N_2 be accessed but they must be accessed in the order indicated by the temporal relation.

If it is determined that the access request completes a prohibited temporal access pattern for the entity, then the request is rejected. *See* paragraphs [0009], [0033] and FIG. 6. Otherwise, the method continues with a comparison of a minimum access level established for the first base node to the predetermined access authorization level assigned to the entity. *See* paragraphs [0009], [0035] and FIG. 6. If the minimum access level for the first base node does not exceed to the predetermined access authorization level, then access request is granted. *See* paragraphs [0009], [0035] and FIG. 6. However, if the minimum access level for the first base node exceeds the predetermined access authorization level assigned to the entity, then the access request is denied. *See* paragraphs [0009], [0035] and FIG. 6.

III. Claim Rejections Under 35 U.S.C. §102(e)

Claims 1-9 and 10-19 have been rejected under 35 U.S.C. §102(e) as being taught by U.S. Patent Publication No. 2004/0044655 to Cotner ("Cotner"). Cotner discloses and teaches a method of controlling access to a relational database. *See* paragraphs [0009], [0053], [0072]-[0084] and FIG. 7B. The method includes receiving a user request for data from the database, in which the request includes a request to perform a database operation and a user security label. *See* paragraphs [0009], [0073] and FIG. 7B. User security information is determined from the user security label. *See* paragraphs [0009], [0074] and FIG. 7B. In response to the user request, rows of data are retrieved from a table in the database that satisfy the database operation, in which the rows each have a security label. *See* paragraphs [0009], [0074] and FIG. 7B. The method further includes determining row security information for each of the retrieved rows based on the row's security label. *See* paragraphs [0009], [0074] and FIG. 7B. For each retrieved row the method determines whether the user is authorized to access the row based on the user security information and the row security information. *See* paragraphs [0009], [0074] and FIG. 7B. Only the rows for which the user is determined to have authorization to access are returned to the user. *See* paragraph [0009] and FIG. 7B.

A. Independent Claims 1 and 10

Claim 1 concerns a method for secure access to a computer system. Claim 10 concerns a method for restricting access to a computer system having logical base nodes representing an information type and/or a computer system function. Claims 1, 10 recite in relevant part "determining if an access request completes a prohibited temporal access pattern for an entity". Claims 1, 10 also recite in relevant part "granting the access request only if it does not complete a prohibited temporal access pattern for the entity". Claims 1, 10 further recite in relevant part "denying the request if the access request completes a prohibited temporal access pattern for said entity."

Upon review of the Cotner reference, it becomes readily apparent that it fails to disclose and/or teach the step of "determining if an access request completes a prohibited temporal access pattern for an entity". It also becomes readily apparent that the Cotner reference fails to disclose and/or teach granting or denying an access request based on the outcome of the determination step. Instead, the Cotner reference teaches a method for controlling access to a relational database based solely on security levels. *See* paragraphs [0009], [0053], [0072]-[0084] and FIG. 7B. Accordingly, a person skilled in the art may interpret the Cotner reference as failing to teach temporal access patterns and an access request control technique utilizing temporal access patterns.

It should be noted that the Examiner opines that paragraph [0034] of the Cotner reference discloses and/or teaches the step of "determining if an access request completes a prohibited temporal access pattern for an entity". However, Applicants have reviewed the cited paragraph [0034] and can find no such teaching. In this regard, it should be appreciated that the cited paragraph [0034] discloses and teaches user security labels identifying certain security levels, such as top secret, secret, and unclassified. The cited paragraph [0034] also discloses and teaches permitting access to data by determining if the user has the proper security level to view the data. In effect, the cited paragraph [0034] fails to disclose and/or teach an access request control technique that involves determining if an access request completes a prohibited temporal access pattern for an entity.

In view of the forgoing, the Cotner reference fails to disclose and teach the steps recited in claims 1, 10. Accordingly, Applicants request reconsideration and allowance of pending claims 1, 10. Claims 3-9 are believed to be in condition for allowance at least by virtue of their dependence upon an allowable base claim. Accordingly, reconsideration and allowance of claims 3-9 is also requested.

B. <u>Independent Claim 11</u>

Claim 11 concerns a secure computer system. Claim 11 recites in relevant part "a secure computer system comprising a temporal access table." Claim 11 also recites

PAGE 12/14 * RCVD AT 7/12/2007 1:10:01 PM [Eastern Daylight Time] * SVR:USPTO-EFXRF-3/10 * DNIS:2738300 * CSID:5616262681 * DURATION (mm-ss):04-08

in relevant part "a secure computer system comprising a processing means programmed for comparing an access request to the temporal access table to determine if the access request completes a prohibited temporal access pattern for an entity." Claim 11 further recites in relevant part that the "processing means denies the request if the access request completes a prohibited temporal access pattern for the entity and grants the access request only if it does not complete a prohibited temporal access pattern for the entity."

Upon review of the Cotner reference, it becomes readily apparent that it fails to disclose and/or teach a secure computer system comprising a temporal access table. It also becomes readily apparent that the Cotner reference fails to disclose and/or teach a processing means programmed for comparing an access request to the temporal access table to determine if the access request completes a prohibited temporal access pattern for an entity. Instead, the Cotner reference teaches a secure computer system configured for controlling access to a relational database based solely on security levels. *See* paragraphs [0009], [0053], [0072]-[0084] and FIG. 7B. Accordingly, a person skilled in the art may interpret the Cotner reference as failing to teach temporal access patterns and a means for implementing an access request control technique utilizing temporal access patterns.

It should be noted that the Examiner opines that paragraphs [00030] and [0034] of the Cotner reference disclose and/or teach a temporal access table. However, Applicants have reviewed the cited paragraphs [00030], [0034] and can find no such teaching.

In view of the forgoing, the Cotner reference fails to disclose and teach the subject matter claimed in claim 11. Accordingly, Applicants request reconsideration and allowance of pending claim 11. Claims 13-19 are believed to be in condition for allowance at least by virtue of their dependence upon an allowable base claim. Accordingly, reconsideration and allowance of claims 13-19 is also requested.

IV. Conclusion

Applicants have made every effort to present claims which distinguish over the prior art, and it is believed that all claims are in condition for allowance. Nevertheless, Applicants invite the Examiner to call the undersigned if it is believed that a telephonic interview would expedite the prosecution of the application to an allowance. In view of the foregoing remarks, Applicants respectfully request reconsideration and prompt allowance of the pending claims.

Respectfully submitted,

7-12-07
Date

Robert J. Sacco
Registration No. 35,667
SACCO & ASSOCIATES, P.A.
P.O. Box 30999
Palm Beach Gardens, FL 33420-0999
Tel: 561-626-2222

PAGE 14/14 * RCVD AT 7/12/2007 1:10:01 PM [Eastern Daylight Time] * SVR:USPTO-EFXRF-3/10 * DNIS:2738300 * CSID:5616262681 * DURATION (mm-ss):04-08

PTO/SB/21 (04-07)
Approved for use through 09/30/2007. OMB 0651-0031
U.S. Patent and Trademark Office; U.S. DEPARTMENT OF COMMERCE
Under the Paperwork Reduction Act of 1995, no persons are required to respond to a collection of information unless it displays a valid OMB control number.

TRANSMITTAL FORM

(to be used for all correspondence after initial filing)

Total Number of Pages in This Submission: 14

Application Number	11/798,074
Filing Date	March 11, 2004
First Named Inventor	KOVARIK, JR.
Art Unit	2109
Examiner Name	SHAIFER HARRIMAN
Attorney Docket Number	7162-0110

RECEIVED
CENTRAL FAX CENTER
JUL 12 2007

ENCLOSURES *(Check all that apply)*

- [ ] Fee Transmittal Form
  - [ ] Fee Attached
- [x] Amendment/Reply
  - [ ] After Final
  - [ ] Affidavits/declaration(s)
- [ ] Extension of Time Request
- [ ] Express Abandonment Request
- [ ] Information Disclosure Statement
- [ ] Certified Copy of Priority Document(s)
- [ ] Reply to Missing Parts/ Incomplete Application
  - [ ] Reply to Missing Parts under 37 CFR 1.52 or 1.53
- [ ] Drawing(s)
- [ ] Licensing-related Papers
- [ ] Petition
- [ ] Petition to Convert to a Provisional Application
- [ ] Power of Attorney, Revocation Change of Correspondence Address
- [ ] Terminal Disclaimer
- [ ] Request for Refund
- [ ] CD, Number of CD(s) _____
  - [ ] Landscape Table on CD
- [ ] After Allowance Communication to TC
- [ ] Appeal Communication to Board of Appeals and Interferences
- [ ] Appeal Communication to TC (Appeal Notice, Brief, Reply Brief)
- [ ] Proprietary Information
- [ ] Status Letter
- [x] Other Enclosure(s) (please identify below): PTO/SB/39

Remarks

Please charge any deficiencies, or credit any overpayment to Dep. Acct. 08-0870.

SIGNATURE OF APPLICANT, ATTORNEY, OR AGENT

Firm Name	SACCO & ASSOCIATES, P.A.		
Signature			
Printed name	Robert J. Sacco		
Date	July 12, 2007	Reg. No.	35,667

CERTIFICATE OF TRANSMISSION/MAILING

I hereby certify that this correspondence is being facsimile transmitted to the USPTO or deposited with the United States Postal Service with sufficient postage as first class mail in an envelope addressed to: Commissioner for Patents, P.O. Box 1450, Alexandria, VA 22313-1450 on the date shown below:

Signature			
Typed or printed name	Robert J. Sacco	Date	July 12, 2007

This collection of information is required by 37 CFR 1.5. The information is required to obtain or retain a benefit by the public which is to file (and by the USPTO to process) an application. Confidentiality is governed by 35 U.S.C. 122 and 37 CFR 1.11 and 1.14. This collection is estimated to 2 hours to complete, including gathering, preparing, and submitting the completed application form to the USPTO. Time will vary depending upon the individual case. Any comments on the amount of time you require to complete this form and/or suggestions for reducing this burden, should be sent to the Chief Information Officer, U.S. Patent and Trademark Office, U.S. Department of Commerce, P.O. Box 1450, Alexandria, VA 22313-1450. DO NOT SEND FEES OR COMPLETED FORMS TO THIS ADDRESS. SEND TO: **Commissioner for Patents, P.O. Box 1450, Alexandria, VA 22313-1450.**

If you need assistance in completing the form, call 1-800-PTO-9199 and select option 2.

RECEIVED
CENTRAL FAX CENTER
JUL 1 2 2007

Doc Code: PD.TO.AUTH

PTO/SB/39 (04-07)
Approved for use through 09/30/2007. OMB 0651-0031
U.S. Patent and Trademark Office; U.S. DEPARTMENT OF COMMERCE
Under the Paperwork Reduction Act of 1995, no persons are required to respond to a collection of information unless it displays a valid OMB control number.

AUTHORIZATION TO PERMIT ACCESS TO APPLICATION BY PARTICIPATING OFFICES

Send completed form to: Commissioner for Patents
P.O. Box 1450, Alexandria, VA 22313-1450

COMPLETE IF KNOWN	
Application Number	10/798074
Filing Date	March 11, 2004
First Named Inventor	KORVARIK, JR.
Art Unit	2109
Examiner Name	SHAFFER HARRIMAN
Attorney Docket Number	7162-0110

The undersigned hereby grants the USPTO authority under the Trilateral Document Access (TDA) Program to provide the European Patent Office (EPO) access to the above-identified patent application, entitled:

ENFORCING COMPUTER SECURITY UTILIZING AN ADAPTIVE LATTICE MECHANISM

In accordance with 37 CFR 1.14(h)(3), access will be provided to a copy of the application-as-filed with respect to: 1) the above-identified application, 2) any foreign application to which the above-identified application claims priority under 35 USC 119(a)-(d), and 3) any U.S. application from which benefit is sought in the above-identified application.

This written authorization should be submitted prior to the filing of a subsequent foreign application with the EPO in which priority is claimed to the above-identified application.

No fee will be charged under 37 CFR 1.19(b)(1) for providing the EPO with an electronic copy of the above-identified application.

This form must be signed by an authorized party in accordance with 37 CFR 1.14(c).

Signature	7-12-07 Date
Robert J. Sacco Printed or Typed Name	561-626-2222 Telephone Number
Attorney Title	35,667 Registration Number, if applicable

This collection of information is required by 37 CFR 1.14(h). The information is required to obtain or retain a benefit by the public which is to file (and by the USPTO to process an application). Confidentiality is governed by 35 U.S.C. 122 and 37 CFR 1.11 and 1.14. This collection is estimated to take 8 minutes to complete, including gathering, preparing, and submitting the completed application form to the USPTO. Time will vary depending upon the individual case. Any comments on the amount of time you require to complete this form and/or suggestions for reducing this burden, should be sent to the Chief Information Officer, U.S. Patent and Trademark Office, U.S. Department of Commerce, P.O. Box 1450, Alexandria, VA 22313-1450. DO NOT SEND FEES OR COMPLETED FORMS TO THIS ADDRESS. SEND TO: Commissioner for Patents, P.O. Box 1450, Alexandria, VA 22313-1450.

If you need assistance in completing the form, call 1-800-PTO-9199 and select option 2.

PTO/SB/06 (07-06)
Approved for use through 1/31/2007. OMB 0651-0032
U.S. Patent and Trademark Office; U.S. DEPARTMENT OF COMMERCE
Under the Paperwork Reduction Act of 1995, no persons are required to respond to a collection of information unless it displays a valid OMB control number.

PATENT APPLICATION FEE DETERMINATION RECORD

Substitute for Form PTO-875

Application or Docket Number	Filing Date	☐ To be Mailed
10/798,074	03/11/2004	

APPLICATION AS FILED – PART I

FOR	(Column 1) NUMBER FILED	(Column 2) NUMBER EXTRA	SMALL ENTITY ☐ RATE ($)	SMALL ENTITY FEE ($)	OR	OTHER THAN SMALL ENTITY RATE ($)	OTHER THAN SMALL ENTITY FEE ($)
☐ BASIC FEE (37 CFR 1.16(a), (b), or (c))	N/A	N/A	N/A			N/A	
☐ SEARCH FEE (37 CFR 1.16(k), (i), or (m))	N/A	N/A	N/A			N/A	
☐ EXAMINATION FEE (37 CFR 1.16(o), (p), or (q))	N/A	N/A	N/A			N/A	
TOTAL CLAIMS (37 CFR 1.16(i))	minus 20 =	*	X $ =		OR	X $ =	
INDEPENDENT CLAIMS (37 CFR 1.16(h))	minus 3 =	*	X $ =			X $ =	
☐ APPLICATION SIZE FEE (37 CFR 1.16(s))	If the specification and drawings exceed 100 sheets of paper, the application size fee due is $250 ($125 for small entity) for each additional 50 sheets or fraction thereof. See 35 U.S.C. 41(a)(1)(G) and 37 CFR 1.16(s).						
☐ MULTIPLE DEPENDENT CLAIM PRESENT (37 CFR 1.16(j))							
* If the difference in column 1 is less than zero, enter "0" in column 2.			TOTAL			TOTAL	

APPLICATION AS AMENDED – PART II

AMENDMENT 07/12/2007	(Column 1) CLAIMS REMAINING AFTER AMENDMENT		(Column 2) HIGHEST NUMBER PREVIOUSLY PAID FOR	(Column 3) PRESENT EXTRA	SMALL ENTITY RATE ($)	SMALL ENTITY ADDITIONAL FEE ($)	OR	OTHER THAN SMALL ENTITY RATE ($)	OTHER THAN SMALL ENTITY ADDITIONAL FEE ($)
Total (37 CFR 1.16(i))	* 17	Minus	** 20	= 0	X $ =		OR	X $50=	0
Independent (37 CFR 1.16(h))	* 3	Minus	***3	= 0	X $ =		OR	X $200=	0
☐ Application Size Fee (37 CFR 1.16(s))									
☐ FIRST PRESENTATION OF MULTIPLE DEPENDENT CLAIM (37 CFR 1.16(j))							OR		
					TOTAL ADD'L FEE		OR	TOTAL ADD'L FEE	0

AMENDMENT	(Column 1) CLAIMS REMAINING AFTER AMENDMENT		(Column 2) HIGHEST NUMBER PREVIOUSLY PAID FOR	(Column 3) PRESENT EXTRA	RATE ($)	ADDITIONAL FEE ($)		RATE ($)	ADDITIONAL FEE ($)
Total (37 CFR 1.16(i))	*	Minus	**	=	X $ =		OR	X $ =	
Independent (37 CFR 1.16(h))	*	Minus	***	=	X $ =		OR	X $ =	
☐ Application Size Fee (37 CFR 1.16(s))									
☐ FIRST PRESENTATION OF MULTIPLE DEPENDENT CLAIM (37 CFR 1.16(j))							OR		
					TOTAL ADD'L FEE		OR	TOTAL ADD'L FEE	

* If the entry in column 1 is less than the entry in column 2, write "0" in column 3.
** If the "Highest Number Previously Paid For" IN THIS SPACE is less than 20, enter "20".
*** If the "Highest Number Previously Paid For" IN THIS SPACE is less than 3, enter "3".
The "Highest Number Previously Paid For" (Total or Independent) is the highest number found in the appropriate box in column 1.

Legal Instrument Examiner:
peggy s. yarborough

This collection of information is required by 37 CFR 1.16. The information is required to obtain or retain a benefit by the public which is to file (and by the USPTO to process) an application. Confidentiality is governed by 35 U.S.C. 122 and 37 CFR 1.14. This collection is estimated to take 12 minutes to complete, including gathering, preparing, and submitting the completed application form to the USPTO. Time will vary depending upon the individual case. Any comments on the amount of time you require to complete this form and/or suggestions for reducing this burden, should be sent to the Chief Information Officer, U.S. Patent and Trademark Office, U.S. Department of Commerce, P.O. Box 1450, Alexandria, VA 22313-1450. DO NOT SEND FEES OR COMPLETED FORMS TO THIS ADDRESS. **SEND TO: Commissioner for Patents, P.O. Box 1450, Alexandria, VA 22313-1450.**
If you need assistance in completing the form, call 1-800-PTO-9199 and select option 2.

UNITED STATES PATENT AND TRADEMARK OFFICE

UNITED STATES DEPARTMENT OF COMMERCE
United States Patent and Trademark Office
Address: COMMISSIONER FOR PATENTS
P.O. Box 1450
Alexandria, Virginia 22313-1450
www.uspto.gov

APPLICATION NO.	FILING DATE	FIRST NAMED INVENTOR	ATTORNEY DOCKET NO.	CONFIRMATION NO.
10/798,074	03/11/2004	Vincent Joseph Kovarik JR.	7162-0110	5321

39207 7590 04/18/2007
SACCO & ASSOCIATES, PA
P.O. BOX 30999
PALM BEACH GARDENS, FL 33420-0999

EXAMINER
SHAIFER HARRIMAN, DANT B

ART UNIT	PAPER NUMBER
2109	

SHORTENED STATUTORY PERIOD OF RESPONSE	MAIL DATE	DELIVERY MODE
3 MONTHS	04/18/2007	PAPER

Please find below and/or attached an Office communication concerning this application or proceeding.

If NO period for reply is specified above, the maximum statutory period will apply and will expire 6 MONTHS from the mailing date of this communication.

Office Action Summary	Application No.	Applicant(s)	
	10/798,074	KOVARIK, VINCENT JOSEPH	
	Examiner	Art Unit	
	Dant B. Shaifer - Harriman	2109	

-- The MAILING DATE of this communication appears on the cover sheet with the correspondence address --

Period for Reply

A SHORTENED STATUTORY PERIOD FOR REPLY IS SET TO EXPIRE 3 MONTH(S) OR THIRTY (30) DAYS, WHICHEVER IS LONGER, FROM THE MAILING DATE OF THIS COMMUNICATION.

- Extensions of time may be available under the provisions of 37 CFR 1.136(a). In no event, however, may a reply be timely filed after SIX (6) MONTHS from the mailing date of this communication.
- If NO period for reply is specified above, the maximum statutory period will apply and will expire SIX (6) MONTHS from the mailing date of this communication.
- Failure to reply within the set or extended period for reply will, by statute, cause the application to become ABANDONED (35 U.S.C. § 133). Any reply received by the Office later than three months after the mailing date of this communication, even if timely filed, may reduce any earned patent term adjustment. See 37 CFR 1.704(b).

Status

1)☒ Responsive to communication(s) filed on 3/11/2004.

2a)☐ This action is **FINAL**. 2b)☒ This action is non-final.

3)☐ Since this application is in condition for allowance except for formal matters, prosecution as to the merits is closed in accordance with the practice under *Ex parte Quayle*, 1935 C.D. 11, 453 O.G. 213.

Disposition of Claims

4)☒ Claim(s) 1-19 is/are pending in the application.

4a) Of the above claim(s) _____ is/are withdrawn from consideration.

5)☐ Claim(s) _____ is/are allowed.

6)☒ Claim(s) 1-19 is/are rejected.

7)☐ Claim(s) _____ is/are objected to.

8)☐ Claim(s) _____ are subject to restriction and/or election requirement.

Application Papers

9)☐ The specification is objected to by the Examiner.

10)☒ The drawing(s) filed on 3/11/2004 is/are: a)☒ accepted or b)☐ objected to by the Examiner.

Applicant may not request that any objection to the drawing(s) be held in abeyance. See 37 CFR 1.85(a).

Replacement drawing sheet(s) including the correction is required if the drawing(s) is objected to. See 37 CFR 1.121(d).

11)☐ The oath or declaration is objected to by the Examiner. Note the attached Office Action or form PTO-152.

Priority under 35 U.S.C. § 119

12)☐ Acknowledgment is made of a claim for foreign priority under 35 U.S.C. § 119(a)-(d) or (f).

a)☐ All b)☐ Some * c)☐ None of:

1.☐ Certified copies of the priority documents have been received.

2.☐ Certified copies of the priority documents have been received in Application No. _____.

3.☐ Copies of the certified copies of the priority documents have been received in this National Stage application from the International Bureau (PCT Rule 17.2(a)).

* See the attached detailed Office action for a list of the certified copies not received.

Attachment(s)

1) ☒ Notice of References Cited (PTO-892)

2) ☐ Notice of Draftsperson's Patent Drawing Review (PTO-948)

3) ☒ Information Disclosure Statement(s) (PTO/SB/08) Paper No(s)/Mail Date 3/11/2004, 3/27/06.

4) ☐ Interview Summary (PTO-413) Paper No(s)/Mail Date. _____ .

5) ☐ Notice of Informal Patent Application

6) ☐ Other: _____.

DETAILED ACTION

Claim Rejections - 35 USC § 101

1. 35 U.S.C. 101 reads as follows:

> Whoever invents or discovers any new and useful process, machine, manufacture, or composition of matter, or any new and useful improvement thereof, may obtain a patent therefor, subject to the conditions and requirements of this title.

Claims(s) 11-19 are rejected under 35 U.S.C. 101 because the claimed invention is directed to non-statutory subject matter. The claims lack the necessary physical articles or objects to constitute a machine or a manufacture within the meaning of 35 USC 101. They are clearly not a series of steps or acts to be a process nor are they a combination of chemical compounds to be a composition of matter. As such, they fail to fall within a statutory category. They are, at best, functional descriptive material *per se*.

Claim 1, 10, 11 are rejected under 35 U.S.C. 101 because the claimed invention is directed to non-statutory subject matter. Claims(s) **1, 10, 11** are directed to a method and secure computer system were a request is received in a computer system, the entity (i.e. the user or the system) that made the request has a predetermined access level that is compared to a minimum access level that is established by the first base node; the entity is also checked to see if it completes a temporal access pattern, if the entity does complete a temporal access pattern, and the entity's predetermined access pattern is meets the minimum access level of the first base node, then the entity's request is granted.

This claimed subject matter lacks a practical application of a judicial exception (law of nature, abstract idea, naturally occurring phenomenon) since it fails to produce a useful, concrete and tangible result.

Specifically, the claimed subject matter does not produce a tangible result because the claimed subject matter fails to produce a result that is limited to having real world value rather than a result that may be interpreted to be abstract in nature as, for example, a thought, a computation, or manipulated data. More specifically, the claimed subject matter provides for the granting of an entity's request if and only if, the entity doesn't complete a temporal access pattern, and the entity's predetermined access level meets the minimum access level of the first base node. This conditional statement yields only and tangible result if access is granted, but otherwise access isn't granted, this is what makes for a non-tangible result. This produced result remains in the abstract and, thus, fails to achieve the required status of having real world value.

Claim Rejections - 35 USC § 102

2. The following is a quotation of the appropriate paragraphs of 35 U.S.C. 102 that form the basis for the rejections under this section made in this Office action:

> A person shall be entitled to a patent unless –
>
> (e) the invention was described in (1) an application for patent, published under section 122(b), by another filed in the United States before the invention by the applicant for patent or (2) a patent granted on an application for patent by another filed in the United States before the invention by the applicant for patent, except that an international application filed under the treaty defined in section 351(a) shall have the effects for purposes of this subsection of an application filed in the United States only if the international application designated the United States and was published under Article 21(2) of such treaty in the English language.

3. Claim(s) 1-9 & 10-19 are rejected under 35 U.S.C. 102(e) as being taught by Cotner (PGPub # US 2004/0044655 A1) hereinafter Cotner.

Cotner teaches:

Claim #1

A method for secure access to a computer system, comprising the steps of:

- receiving in said computer system a request from an entity with a predetermined access level for access to a first base node representing at least one of an information type and a computer system function (Paragraph: 0085), the examiner notes that the user or entity requests an update to the data in the database, this is equivalent to a computer system receiving a request and a first base node is of either a information type(i.e. data in data row) and a computer system function (i.e. the actual computer function that updates the row data in the row).

- determining if said access request completes a prohibited temporal access pattern for said entity(Paragraph: 0034), the examiner notes that by the fact that a user can or administrator can update the security label from Secret to Top Secret over a period of time based on the type of work or clearance that is needed to work on the project, it is inherent that this is a temporal access pattern.
- and comparing a minimum access level established for said first base node to said predetermined access level(Paragraph: 0039), the examiner notes that the user security level must be greater or equal to the row's security level, this is equivalent to the first base node minimum access level doesn't exceed the predetermined access level of the user or entity.
- and granting said access request only if it does not complete a prohibited temporal access pattern for said entity(Paragraph: 0034), the examiner notes that by the fact that a user can or administrator can update the security label from Secret to Top Secret over a period of time based on the type of work or clearance that is needed to work on the project, it is inherent that this is a temporal access pattern.
- and said minimum access level for said first base node does not exceed said predetermined access level(Paragraph: 0039), the examiner notes that the user security level must be greater or equal to the row's security level, this is equivalent to the first base node minimum access level doesn't exceed the predetermined access level of the user or entity.

The examiner further notes that claims 1 and 10 are duplicates and that claims 10 is the implementation of claim 1 on the method, which when implement produces the same result.

Claim #2

The method according to claim 1, further comprising the step of denying said request if said access request completes a prohibited temporal access pattern for said entity, (Paragraph: 0038 & 0039, the examiner notes that by the fact that a user or administrator can update the security label from Secret to Top Secret over a period of time based on the type of work or access clearance that is needed to work on the project, it is inherent that this is a completed temporal access pattern.

The examiner further notes that claims 2 and 12 are duplicates and that claims 12 is the implementation of claim 2 on the method, which when implement produces the same result.

Claim # 3

The method according to claim 1, further comprising the step of denying said request if said minimum access level for said first base node exceeds said predetermined access level for said entity, (Paragraph: 0039, the examiner notes that the users security label is greater than or equal to the row's security label is the same as the entity or user meeting the minimum access level of the first base node.

The examiner further notes that claims 3 and 13 are duplicates and that claims 13 is the implementation of claim 3 on the method, which when implement produces the same result.

Claim #4

The method according to claim 1, further comprising the steps of: logically organizing said computer system in the form of a tree hierarchy having a plurality of leaf nodes and higher-level nodes; defining a plurality of said base nodes as comprising respectively a plurality of leaf nodes of said tree hierarchy; and defining said higher-level nodes as aggregations of said base nodes, (Paragraphs: 0057, the examiner notes that the keywords "leaf node and higher level security level node" describes a tree hierarchy, which contains both higher level nodes and leaf nodes per se.

The examiner further notes that claims 4 and 14 are duplicates and that claims 14 is the implementation of claim 4 on the method, which when implement produces the same result.

Claim #5

The method according to claim 4 further comprising the step of identifying within said hierarchy any higher-level nodes that are aggregations comprising said first base node, (Paragraph: 0057 & Figure 4, the examiner notes that the rainbow (higher leaf node) is composed of a multitude of colors including sunset, which is the first base node in this case.

The examiner further notes that claims 5 and 15 are duplicates and that claims 15 is the implementation of claim 5 on the method, which when implement produces the same result.

Claim #6

The method according to claim 5, further comprising the step of identifying within said hierarchy any nodes that comprise children of any generation of said high-level nodes that are aggregations comprising said first base node, (Paragraph: 0057 & 0058 & Figure 4, the examiner notes that the rainbow (higher leaf node) is composed of a multitude of colors including sunset, which is the first base node in this case.

The examiner further notes that claims 6 and 16 are duplicates and that claims 16 is the implementation of claim 6 on the method, which when implement produces the same result.

Claim #7

The method according to claim 6, further comprising the step of updating a minimum required entity access level for any base nodes that comprise children of any generation of said higher-level nodes that are aggregations comprising said first base node, (Paragraph: 0058 & Figure 4 & 0085 & Figure 8A, the examiner notes that if the data is changed or updated in the row, for example the column headings are changed from secret to top secret, then the corresponding users (entity) security level is updated as well (i.e. sunset(first base node) to rainbow), then the user that initiated the update

will be able to access the top secret data at a rainbow security level or at a higher color access control level.

The examiner further notes that claims 7 and 17 are duplicates and that claims 17 is the implementation of claim 7 on the method, which when implement produces the same result.

Claim #8

The method according to claim 7, wherein said updating step further comprises the steps of: comparing said entity's predetermined access level against the minimum required access level of said higher-level nodes that are aggregations comprising said first base node; and updating a minimum required access level of any said base node that is also a member of any aggregation comprising said first base node if a minimum required access level for said higher-level node comprising said aggregation has a required access level that is higher than said entity's predetermined access level, (Paragraph: 0058 & Figure 4 & 0085 & Figure 8A, the examiner notes that if the data is changed or updated in the row, for example the column headings are changed from secret to top secret, then the corresponding users (entity) security level is updated as well (i.e. sunset(first base node) to rainbow), then the user that initiated the update will be able to access the top secret data at a rainbow security level or at a higher color access control level.

The examiner further notes that claims 8 and 18 are duplicates and that claims 18 is the implementation of claim 8 on the method, which when implement produces the same result.

Claim #9

The method according to claim 1, further comprising the steps of: comparing said entity's predetermined access level against the minimum required access level of at least one higher-level node that is an aggregation of base nodes including said first base node; and updating a minimum required access level of any said base node that is also a member of any aggregation comprising said first base node if a minimum required access level for said higher-level node comprising said aggregation has a required access level that is higher than said entity's predetermined access level, (Paragraph: 0058 & Figure 4 & 0085 & Figure 8A, the examiner notes that if the data is changed or updated in the row, for example the column headings are changed from secret to top secret, then the corresponding users(entity) security level is updated as well (i.e. sunset(first base node) to rainbow), then the user that initiated the update will be able to access the top secret data at a rainbow security level or at a higher color access control level.

The examiner further notes that claims 9 and 19 are duplicates and that claims 19 is the implementation of claim 9 on the method, which when implement produces the same result.

Claim #11

A secure computer system comprising: a plurality of logical base nodes representing at least one of an information type and a computer system function; a

plurality of higher-level nodes arranged together with said base nodes in the form of a tree hierarchy; a computer system interface capable of receiving a request from an entity with a predetermined access level for access to a first base node; a temporal access table; processing means programmed for comparing said access request to said temporal access table to determine if said access request completes a prohibited temporal access pattern for said entity, and for comparing a minimum access level established for said first base node to said predetermined access level and wherein said processing means grants said access requests only if it does not complete a prohibited temporal access pattern for said entity, and said minimum access level for said first base node does not exceed said predetermined access level, (Paragraphs: 0030 & 0034, the examiner notes that a security table which relates a user identification and security table, change with time based on the project type and sensitivity level associated with the project, therefore it is inherent that a security table in fact is a temporal access table. The examiner further notes that to one of ordinary skill in the art, that a database is constructed in a software language and can only be implemented on a computer or computer system, thus it is inherent that a computer system and software will employ an interface for interaction with the user or administrator.

Any inquiry concerning this communication or earlier communications from the examiner should be directed to Dant B. Shaifer - Harriman whose telephone number is 571-272-7910. The examiner can normally be reached on Monday - Thursday: 8:00am - 5:30pm Alt.Fridays off.

If attempts to reach the examiner by telephone are unsuccessful, the examiner's supervisor, Joseph Del Sole can be reached on 571-272-1130. The fax phone number for the organization where this application or proceeding is assigned is 571-273-8300.

Information regarding the status of an application may be obtained from the Patent Application Information Retrieval (PAIR) system. Status information for published applications may be obtained from either Private PAIR or Public PAIR. Status information for unpublished applications is available through Private PAIR only. For more information about the PAIR system, see http://pair-direct.uspto.gov. Should you have questions on access to the Private PAIR system, contact the Electronic Business Center (EBC) at 866-217-9197 (toll-free). If you would like assistance from a USPTO Customer Service Representative or access to the automated information system, call 800-786-9199 (IN USA OR CANADA) or 571-272-1000.

KIMBERLY D. NGUYEN
PRIMARY EXAMINER

PTO/SB/08A (02-03)
Approved for use through 04/30/2003. OMB 0651-0031
U.S. Patent and Trademark Office; U.S. DEPARTMENT OF COMMERCE
Under the Paperwork Reduction Act of 1995, no persons are required to respond to a collection of information unless it contains a valid OMB control number.

Substitute for form 1449/PTO

INFORMATION DISCLOSURE STATEMENT BY APPLICANT

(Use as many sheets as necessary)

Sheet 1 of 1

Complete if Known	
Application Number	10/798074
Filing Date	3/11/04
First Named Inventor	KOVARIK
Art Unit	2109
Examiner Name	Dant B. Shaifer - Harriman
Attorney Docket Number	7162-0110

U. S. PATENT DOCUMENTS

Examiner Initials*	Cite No.[1]	Document Number Number-Kind Code[2] (if known)	Publication Date MM-DD-YYYY	Name of Patentee or Applicant of Cited Document	Pages, Columns, Lines, Where Relevant Passages or Relevant Figures Appear
/DS/		US- 6,334,121	12/25/2001	Primeaux, et al.	
/DS/		US- 6,345,361	02/05/2002	Jerger, et al.	
/DS/		US- 6,405,202	06/11/2002	Britton, et al.	
/DS/		US- 6,408,391	06/18/2002	Huff, et al.	
/DS/		US- 6,446,206	09/03/2002	Feldbaum	
/DS/		US- 6,446,077	09/03/2002	Straube, et al.	
/DS/		US- 6,453,418	09/17/2002	Ooki, et al.	
		US-			
		US-			
		US-			
		US-			
		US-			
		US-			
		US-			
		US-			
		US-			
		US-			
		US-			
		US-			

FOREIGN PATENT DOCUMENTS

Examiner Initials*	Cite No.[1]	Foreign Patent Document Country Code[3]-Number[4]-Kind Code[5] (if known)	Publication Date MM-DD-YYYY	Name of Patentee or Applicant of Cited Document	Pages, Columns, Lines, Where Relevant Passages Or Relevant Figures Appear	T[6]

Examiner Signature	/Dant Shaifer Harriman/	Date Considered	4/9/2007

*EXAMINER: Initial if reference considered, whether or not citation is in conformance with MPEP 609. Draw line through citation if not in conformance and not considered. Include copy of this form with next communication to applicant. [1] Applicant's unique citation designation number (optional). [2] See Kinds Codes of USPTO Patent Documents at www.uspto.gov or MPEP 901.04. [3] Enter Office that issued the document, by the two-letter code (WIPO Standard ST.3). [4] For Japanese patent documents, the indication of the year of the reign of the Emperor must precede the serial number of the patent document. [5] Kind of document by the appropriate symbols as indicated on the document under WIPO Standard ST. 16 if possible. [6] Applicant is to place a check-mark here if English language Translation is attached.

This collection of information is required by 37 CFR 1.97 and 1.98. The information is required to obtain or retain a benefit by the public which is to file (and by the USPTO to process) an application. Confidentiality is governed by 35 U.S.C. 122 and 37 CFR 1.14. This collection is estimated to take 2 hours to complete, including gathering, preparing, and submitting the completed application form to the USPTO. Time will vary depending upon the individual case. Any comments on the amount of time you require to complete this form and/or suggestions for reducing this burden, should be sent to the Chief Information Officer, U.S. Patent and Trademark Office, U.S. Department of Commerce, Washington, DC 20231. DO NOT SEND FEES OR COMPLETED FORMS TO THIS ADDRESS. SEND TO: Commissioner for Patents, Washington, DC 20231.

If you need assistance in completing the form, call 1-800-PTO-9199 (1-800-786-9199) and select option 2.

Express Mail Label:
EV 417207036 US

OIPE IAP21 MAR 27 2006 PATENT & TRADEMARK OFFICE

PTO/SB/08A (07-05)
Approved for use through 07/31/2006. OMB 0651-0031
U.S. Patent and Trademark Office; U.S. DEPARTMENT OF COMMERCE

Under the Paperwork Reduction Act of 1995, no persons are required to respond to a collection of information unless it contains a valid OMB control number.

Substitute for form 1449/PTO

INFORMATION DISCLOSURE STATEMENT BY APPLICANT

(Use as many sheets as necessary)

Sheet 1 of 2

Complete if Known	
Application Number	10/798,074
Filing Date	March 11, 2004
First Named Inventor	KOVARIK, JR.
Art Unit	~~219~~ 2109
Examiner Name	Dant B. Shaifer-Harriman
Attorney Docket Number	7162-0110

U. S. PATENT DOCUMENTS

Examiner Initials*	Cite No.[1]	Document Number Number-Kind Code[2] (if known)	Publication Date MM-DD-YYYY	Name of Patentee or Applicant of Cited Document	Pages, Columns, Lines, Where Relevant Passages or Relevant Figures Appear
/DS/		US- 2002/0138322	09/26/2002	UMEZAWA, et al.	
/DS/		US- 6,023,765	02/08/2002	KUHN	
/DS/		US- 2004/0044655	03/04/2004	COTNER, et al.	
		US-			
		US-			
		US-			
		US-			
		US-			
		US-			
		US-			
		US-			
		US-			
		US-			
		US-			
		US-			
		US-			
		US-			
		US-			

FOREIGN PATENT DOCUMENTS

Examiner Initials*	Cite No.[1]	Foreign Patent Document Country Code[3]-Number[4]-Kind Code[5] (if known)	Publication Date MM-DD-YYYY	Name of Patentee or Applicant of Cited Document	Pages, Columns, Lines, Where Relevant Passages Or Relevant Figures Appear	T[6]
/DS/		WO 03/088018	10/23/2003	RAYTHEON CO.		

Examiner Signature	/Dant Shaifer Harriman/	Date Considered	4/4/07

*EXAMINER: Initial if reference considered, whether or not citation is in conformance with MPEP 609. Draw line through citation if not in conformance and not considered. Include copy of this form with next communication to applicant. [1] Applicant's unique citation designation number (optional). [2] See Kinds Codes of USPTO Patent Documents at www.uspto.gov or MPEP 901.04. [3] Enter Office that issued the document, by the two-letter code (WIPO Standard ST.3). [4] For Japanese patent documents, the indication of the year of the reign of the Emperor must precede the serial number of the patent document. [5] Kind of document by the appropriate symbols as indicated on the document under WIPO Standard ST.16 if possible. [6] Applicant is to place a check mark here if English language Translation is attached.

This collection of information is required by 37 CFR 1.97 and 1.98. The information is required to obtain or retain a benefit by the public which is to file (and by the USPTO to process) an application. Confidentiality is governed by 35 U.S.C. 122 and 37 CFR 1.14. This collection is estimated to take 2 hours to complete, including gathering, preparing, and submitting the completed application form to the USPTO. Time will vary depending upon the individual case. Any comments on the amount of time you require to complete this form and/or suggestions for reducing this burden, should be sent to the Chief Information Officer, U.S. Patent and Trademark Office, P.O. Box 1450, Alexandria, VA 22313-1450. DO NOT SEND FEES OR COMPLETED FORMS TO THIS ADDRESS. SEND TO: Commissioner for Patents, P.O. Box 1450, Alexandria, VA 22313-1450.

If you need assistance in completing the form, call 1-800-PTO-9199 (1-800-786-9199) and select option 2.

PTO/SB/08B (07-05)
Approved for use through 07/31/2006. OMB 0651-0031
U.S. Patent and Trademark Office; U.S. DEPARTMENT OF COMMERCE
Under the Paperwork Reduction Act of 1995, no persons are required to respond to a collection of information unless it contains a valid OMB control number.

Substitute for form 1449/PTO

INFORMATION DISCLOSURE STATEMENT BY APPLICANT

(Use as many sheets as necessary)

Sheet 2 of 2

Complete if Known	
Application Number	10/798,074
Filing Date	March 11, 2004
First Named Inventor	KOVARIK, JR.
Art Unit	~~2131~~ 2109
Examiner Name	Dant B. Shaifer - Harriman
Attorney Docket Number	7162-0110

NON PATENT LITERATURE DOCUMENTS

Examiner Initials*	Cite No.[1]	Include name of the author (in CAPITAL LETTERS), title of the article (when appropriate), title of the item (book, magazine, journal, serial, symposium, catalog, etc.), date, page(s), volume-issue number(s), publisher, city and/or country where published.	T[2]
/DS/		MEADOWS, C., "Extending the Brewer-Nash Model to a Multilevel Context" IEEE, Proceedings of the Symposium on Research in Security and Privacy. Oakland, May 7-9, 1990	
/DS/		STICKEL, M., "Elimination of Inference Channels by Optimal Upgrading" Research in Security and Privacy, 1994. 1994 IEEE Computer Society Symposium in Oakland, CA, May 16-18, IEEE Comput. Soc, 16 May, 2004, pages 168-174	
/DS/		DENNING, D., "A Lattice Model of Secure Information Flow" COMMUNICATIONS OF THE ACM, Vol. 19, No. 5, May 1976, pp 236-243.	
/DS/		NULL, L., et al., "A Unified Approach for Multilevel Database Security Based on Inference Engines" SIGCSE BULLETIN, ACM, New York, NY Feb. 23, 1989, pp 108-111	
/DS/		SAMARATI, et al., "Access Control: Policies, Models, and Mechanisms" Lecture Notes in Computer Science, Springer Verlag, New York, NY Vol. 2171, June 2003, pp 137-196	
/DS/		SANDHU, R., "Lattice-Based Access Control Models" Online: URL:http//doi. ieeecomputersociety.org/10.1109/2.241422> retrieved on 10/25/2005	
/DS/		BREWER, D., et al., "The Chinese Wall Security Policy" Proceedings of the Symposium on Security and Privacy. Oakland, May 1-3, 1989, Washington, IEEE Comp. Soc. Press, US	
/DS/		SANDHU, R., "The Typed Access Matrix Model" IEEE, Proceedings of the Computer Society Sypmsium on Research in Security and Privacy. Oakland, May 4-6, 1992, Los Alamitos, IEEE Comp. Soc. Press, US., Vol. SYMP. 13, May 4, 1992, pp. 122-136	

Examiner Signature	/Dant Shaifer Harriman/	Date Considered	4/4/07

*EXAMINER: Initial if reference considered, whether or not citation is in conformance with MPEP 609. Draw line through citation if not in conformance and not considered. Include copy of this form with next communication to applicant.

1 Applicant's unique citation designation number (optional). 2 Applicant is to place a check mark here if English language Translation is attached.

This collection of information is required by 37 CFR 1.98. The information is required to obtain or retain a benefit by the public which is to file (and by the USPTO to process) an application. Confidentiality is governed by 35 U.S.C. 122 and 37 CFR 1.14. This collection is estimated to take 2 hours to complete, including gathering, preparing, and submitting the completed application form to the USPTO. Time will vary depending upon the individual case. Any comments on the amount of time you require to complete this form and/or suggestions for reducing this burden, should be sent to the Chief Information Officer, U.S. Patent and Trademark Office, P.O. Box 1450, Alexandria, VA 22313-1450. DO NOT SEND FEES OR COMPLETED FORMS TO THIS ADDRESS. SEND TO: **Commissioner for Patents, P.O. Box 1450, Alexandria, VA 22313-1450.**

If you need assistance in completing the form, call 1-800-PTO-9199 (1-800-786-9199) and select option 2.

Notice of References Cited	Application/Control No. 10/798,074	Applicant(s)/Patent Under Reexamination KOVARIK, VINCENT JOSEPH	
	Examiner Dant B. Shaifer - Harriman	Art Unit 2109	Page 1 of 1

U.S. PATENT DOCUMENTS

*		Document Number Country Code-Number-Kind Code	Date MM-YYYY	Name	Classification
*	A	US-2004/0044655 A1	03-2004	Cotner et al.	707/003
	B	US-			
	C	US-			
	D	US-			
	E	US-			
	F	US-			
	G	US-			
	H	US-			
	I	US-			
	J	US-			
	K	US-			
	L	US-			
	M	US-			

FOREIGN PATENT DOCUMENTS

*		Document Number Country Code-Number-Kind Code	Date MM-YYYY	Country	Name	Classification
	N					
	O					
	P					
	Q					
	R					
	S					
	T					

NON-PATENT DOCUMENTS

*		Include as applicable: Author, Title Date, Publisher, Edition or Volume, Pertinent Pages)
	U	
	V	
	W	
	X	

*A copy of this reference is not being furnished with this Office action. (See MPEP § 707.05(a).)
Dates in MM-YYYY format are publication dates. Classifications may be US or foreign.

Search Notes	Application/Control No.	Applicant(s)/Patent Under Reexamination
	10798074	KOVARIK, VINCENT JOSEPH
	Examiner	**Art Unit**
	Shaifer - Harriman , Dant B	2109

SEARCHED

Class	Subclass	Date	Examiner
709	229	4/9/2007	dsh
713	201	4/5/2007	dsh
713	166	4/5/2007	dsh
726	23	4/9/2007	dsh
709	219	4/9/2007	dsh

SEARCH NOTES

Search Notes	Date	Examiner
East Search (see attached)	4/5/2007-4/9/2007	dsh
Inventor Search, reveiwed related applications (see attached)	4/3/2007	dsh
Consolted with Mr. Matt Heneghan, AU=2134	4/9/2007	dsh

INTERFERENCE SEARCH

Class	Subclass	Date	Examiner

UNITED STATES PATENT AND TRADEMARK OFFICE

UNITED STATES DEPARTMENT OF COMMERCE
United States Patent and Trademark Office
Address: COMMISSIONER FOR PATENTS
P.O. Box 1450
Alexandria, Virginia 22313-1450
www.uspto.gov

Bib Data Sheet

CONFIRMATION NO. 5321

SERIAL NUMBER	FILING OR 371(c) DATE	CLASS	GROUP ART UNIT	ATTORNEY DOCKET NO.
10/798,074	03/11/2004 RULE	713	2109	7162-0110

APPLICANTS

Vincent Joseph Kovarik JR., Grant, FL;

**** CONTINUING DATA ****************************

**** FOREIGN APPLICATIONS ***********************

IF REQUIRED, FOREIGN FILING LICENSE GRANTED
** 05/27/2004

		STATE OR COUNTRY	SHEETS DRAWING	TOTAL CLAIMS	INDEPENDENT CLAIMS
Foreign Priority claimed 35 USC 119 (a-d) conditions met Verified and Acknowledged	☐ yes ☑ no ☐ yes ☑ no ☐ Met after Allowance Examiner's Signature Initials	FL ✓	10 ✓	19 ✓	3 ✓

ADDRESS
39207

TITLE

Enforcing computer security utilizing an adaptive lattice mechanism

FILING FEE RECEIVED		
770	FEES: Authority has been given in Paper No. _____ to charge/credit DEPOSIT ACCOUNT No. _____ for following:	☐ All Fees ☐ 1.16 Fees (Filing) ☐ 1.17 Fees (Processing Ext. of time) ☐ 1.18 Fees (Issue) ☐ Other _____ ☐ Credit

EAST Search History

Ref #	Hits	Search Query	DBs	Default Operator	Plurals	Time Stamp
L1	2051	709/229.ccls.	USPAT	OR	ON	2007/04/09 14:15
L2	2050	L1 and (receiving and request in computer and system)	USPAT	OR	ON	2007/04/09 14:14
L3	1049	L2 and ((authorization) or (authentication) or (pretdetermined and access and level) or (minimum and access and level))	USPAT	OR	ON	2007/04/09 14:19
L5	0	"10254457"	USPAT	OR	ON	2007/04/09 15:19
L6	8	"254457"	USPAT	OR	ON	2007/04/09 15:20
S1	27	"6014628"	US-PGPUB; USPAT	OR	ON	2007/04/03 07:42
S2	3	"7020717"	US-PGPUB; USPAT	OR	ON	2007/04/03 07:44
S3	2	"7126470"	US-PGPUB; USPAT	OR	ON	2007/04/03 07:48
S4	19	"5733418"	US-PGPUB; USPAT	OR	ON	2007/04/03 10:21
S5	1	"20020138322"	US-PGPUB; USPAT	OR	ON	2007/04/03 11:41
S6	22	"6023765"	US-PGPUB; USPAT	OR	ON	2007/04/03 16:51
S7	10	"5,429,736"	US-PGPUB; USPAT	OR	ON	2007/04/04 08:01
S8	3	"0044655"	US-PGPUB; USPAT	OR	ON	2007/04/04 08:02
S9	1	2004/0044655	US-PGPUB; USPAT	OR	ON	2007/04/04 08:02
S10	1	"20040044655"	US-PGPUB; USPAT	OR	ON	2007/04/04 10:15
S11	0	wo03/088018	US-PGPUB; USPAT	OR	ON	2007/04/04 10:16
S12	0	wo03088018	US-PGPUB; USPAT	OR	ON	2007/04/04 10:16
S13	1	"03088018"	US-PGPUB; USPAT	OR	ON	2007/04/04 10:17
S14	6	"088018"	US-PGPUB; USPAT	OR	ON	2007/04/04 10:18
S15	0	03/088018	US-PGPUB; USPAT	OR	ON	2007/04/04 10:18
S16	0	03/088018	US-PGPUB; USPAT	OR	ON	2007/04/04 10:22

EAST Search History

S17	0	wo03/088018	US-PGPUB; USPAT; USOCR; FPRS; EPO; JPO; DERWENT; IBM_TDB	OR	ON	2007/04/04 10:23
S18	0	wo03088018	US-PGPUB; USPAT; USOCR; FPRS; EPO; JPO; DERWENT; IBM_TDB	OR	ON	2007/04/04 10:23
S19	3	"03088018"	US-PGPUB; USPAT; USOCR; FPRS; EPO; JPO; DERWENT; IBM_TDB	OR	ON	2007/04/04 10:24
S20	2	"20040044655"	US-PGPUB; USPAT; USOCR; FPRS; EPO; JPO; DERWENT; IBM_TDB	OR	ON	2007/04/05 16:19
S21	0	713/201.CCLS.	US-PGPUB; USPAT; USOCR; FPRS; EPO; JPO; DERWENT; IBM_TDB	OR	ON	2007/04/05 16:22
S22	0	713/201.ccls.	US-PGPUB; USPAT; USOCR; FPRS; EPO; JPO; DERWENT; IBM_TDB	OR	ON	2007/04/05 16:22
S23	415	713/166.ccls.	US-PGPUB; USPAT; USOCR; FPRS; EPO; JPO; DERWENT; IBM_TDB	OR	ON	2007/04/05 16:25

EAST Search History

S24	12	"6334121"	US-PGPUB; USPAT; USOCR; FPRS; EPO; JPO; DERWENT; IBM_TDB	OR	ON	2007/04/05 16:29
S25	8	("6334121").URPN.	USPAT	OR	ON	2007/04/05 16:55
S26	23	"6345361"	USPAT	OR	ON	2007/04/05 16:56
S27	22	("6345361").URPN.	USPAT	OR	ON	2007/04/05 17:13
S28	12	"6405202"	USPAT	OR	ON	2007/04/09 08:09
S29	26	"6408391"	USPAT	OR	ON	2007/04/09 08:28
S30	9	"6446206"	USPAT	OR	ON	2007/04/09 08:43
S31	10	"6446077"	USPAT	OR	ON	2007/04/09 09:19
S32	3	"6453418"	USPAT	OR	ON	2007/04/09 11:28
S33	221	726/23.ccls.	USPAT	OR	ON	2007/04/09 15:19
S34	100	S33 and (receiving and request and computer and system)	USPAT	OR	ON	2007/04/09 11:35
S35	63	S33 and (temporal or (time and interval))	USPAT	OR	ON	2007/04/09 11:35
S36	5	("20010047420" | "5974496" | "6529706" | "6741841" | "6904449").PN.	US-PGPUB; USPAT; USOCR	OR	ON	2007/04/09 11:37
S37	1	("2001/0047420").URPN.	USPAT	OR	ON	2007/04/09 11:38
S38	25	("6484203").URPN.	USPAT	OR	ON	2007/04/09 12:25
S39	0	("7200656").URPN.	USPAT	OR	ON	2007/04/09 12:26
S40	0	("7200656").URPN.	USPAT	OR	ON	2007/04/09 12:26
S41	0	("7200656").URPN.	USPAT	OR	ON	2007/04/09 12:26
S42	10	S33 and (temporal)	USPAT	OR	ON	2007/04/09 12:28
S43	5	("6826697").URPN.	USPAT	OR	ON	2007/04/09 13:20
S44	0	("7181733").URPN.	USPAT	OR	ON	2007/04/09 13:21
S45	165	S33 and ((request and (user or entity) and in and computer and system) or (receiving and (user or entity) and in and computer and system))	USPAT	OR	ON	2007/04/09 13:26
S46	14	S33 and ((request same (user or entity) same in same computer same system) or (receiving same (user or entity) same in same computer same system))	USPAT	OR	ON	2007/04/09 13:26

EAST Search History

S47	76	S45 and ((predetermined and access and level) or (minimum and access and level))	USPAT	OR	ON	2007/04/09 13:28
S48	5	S47 and ((temporal and access and pattern) or (temporal))	USPAT	OR	ON	2007/04/09 13:30
S49	38	("6324647").URPN.	USPAT	OR	ON	2007/04/09 13:30
S50	38	("6324647").URPN.	USPAT	OR	ON	2007/04/09 13:31
S51	0	("7178166").URPN.	USPAT	OR	ON	2007/04/09 13:40
S52	2739	709/219.ccls.	USPAT	OR	ON	2007/04/09 13:42
S53	599	S52 and (receiving and request and computer and system and entity)	USPAT	OR	ON	2007/04/09 13:43
S54	239	S53 and ((predetermined and access and entity) and (minimum and access level))	USPAT	OR	ON	2007/04/09 13:45
S55	451	S53 and ((predetermined and access and entity) or (minimum and access and level) or (authorization) or (authentication))	USPAT	OR	ON	2007/04/09 13:46
S56	15	S55 and ((temporal) or (temporal and access and pattern))	USPAT	AND	ON	2007/04/09 13:52
S57	15	S55 and ((temporal) or (temporal and access and pattern))	USPAT	OR	ON	2007/04/09 13:55

PALM INTRANET

Day : Tuesday
Date: 4/3/2007
Time: 07:12:33

Inventor Name Search Result

Your Search was:

Last Name = KOVARIK
First Name = VIN

Application#	Patent#	Status	Date Filed	Title	Inventor Name
09135389	6014628	150	08/17/1998	METHOD AND SYSTEM FOR TRACKING ANY ENTITY THROUGH ANY SET OF PROCESSES UTILIZING A TEMPORAL PROJECTION	KOVARIK JR., VINCENT J.
60065811	Not Issued	159	11/14/1997	METHODOLOGY FOR DESIGNING AND CONFIGURING LOW EARTH ORBITING SATELLITE COMMUNICATION SYSTEM	KOVARIK, VINCE
60066924	Not Issued	159	11/28/1997	METHODOLOGY FOR DESIGNING AND CONFIGURING LOW EARTH ORBITING SATELLITE COMMUNICATION SYSTEM	KOVARIK, VINCE
09677072	7020717	150	09/29/2000	A SYSTEM AND METHOD FOR RESYNCHRONIZING INTERPROCESS COMMUNICATIONS CONNECTION BETWEEN CONSUMER AND PUBLISHER APPLICATIONS BY USING A SHARED STATE MEMORY AMONG MESSAGE TOPIC SERVER AND MESSAGE ROUTERS	KOVARIK, VINCENT
60156605	Not Issued	159	09/29/1999	METHOD FOR RE-SYNCHRONIZING INTER-PROCESS COMMUNICATIONS IN A DISTRIBUTED MESSAGE SYSTEM	KOVARIK, VINCENT
10814032	7126470	150	03/31/2004	WIRELESS AD-HOC RFID TRACKING SYSTEM	KOVARIK, VINCENT J.
06386370	4728862	150	06/08/1982	A METHOD FOR ACHIEVING INGNITION OF A LOW	KOVARIK, VINCENT J.

				VOLTAGE GAS DISCHARGE DEVICE	
07249813	4942339	250	09/27/1988	INTENSE STEADY STATE ELECTRON BEAM GENERATOR	KOVARIK, VINCENT J.
08646149	5733418	250	05/07/1996	SPUTTERING METHOD AND APPARATUS	KOVARIK, VINCENT J.
60064128	Not Issued	159	11/03/1997	SOFTWARE ENGINE FOR OBJECT TRACKING SYSTEM	KOVARIK, VINCENT J.
10798074	Not Issued	30	03/11/2004	Enforcing computer security utilizing an adaptive lattice mechanism	KOVARIK, VINCENT JOSEPH

Inventor Search Completed: No Records to Display.

Search Another: Inventor **Last Name** kovarik **First Name** vin Search

To go back use Back button on your browser toolbar.

Back to PALM | ASSIGNMENT | OASIS | Home page

OIPE IAP21
MAR 27 2006
PATENT & TRADEMARK OFFICE

IFW

IN THE UNITED STATES PATENT AND TRADEMARK OFFICE

Application No.	:	10/798,074	Confirmation No.	5321
Applicant	:	KOVARIK, JR.		
Filed	:	March 11, 2004		
TC/A.U.	:	2131		
Examiner	:			
Docket No.	:	7162-0110		
Customer No.	:	39207		

TRANSMITTAL LETTER

Mail Stop Amendment
Commissioner for Patents
P.O. Box 1450
Alexandria, VA 22313-1450

Sir:

Please find enclosed for filing:

- ✓ Supplemental Information Disclosure Statement
- ✓ PTO Forms SB08A and SB08B
- ✓ Copy of European Search Report; References
- ✓ Other: Postcard Receipt
- ✓ Please charge any deficiencies or credit any overpayments to Deposit Acct. No. 08-0870.

Respectfully submitted,

Date: Mar. 22, 2006

Robert J. Sacco
Registration No. 35,667
SACCO & ASSOCIATES, P.A.
P.O. Box 30999
Palm Beach Gardens, FL 33420-0999
Tel: 561-626-2222

Certificate Under 37 C.F.R. 1.8(a)

I hereby certify that this correspondence is being deposited with the United States Postal Service with sufficient postage as First Class Mail in an envelope addressed to: Mail Stop Amendment, Commissioner for Patents, P.O. Box 1450, Alexandria, VA 22313-1450 on Mar. 22, 2006. Typed name of person signing this certificate: ROBERT J. SACCO

{00009419;}

OIPE IAP21
MAR 27 2006
PATENT & TRADEMARK OFFICE

IN THE UNITED STATES PATENT AND TRADEMARK OFFICE

Application No.	:	10/798,074	Confirmation No.	5321
Applicant	:	KOVARIK, JR.		
Filed	:	March 11, 2004		
TC/A.U.	:	2131		
Examiner	:			
Docket No.	:	7162-0110		
Customer No.	:	39207		

SUPPLEMENTAL INFORMATION DISCLOSURE STATEMENT PURSUANT TO 37 CFR 1.97

Mail Stop Amendment
Commissioner for Patents
P.O. Box 1450
Alexandria, VA 22313-1450

Sir:

Pursuant to the Duty to Disclose under 37 C.F.R. §1.56, the references cited on the accompanying forms PTO SB08A and SB08B are hereby brought to the attention of the Examiner for independent evaluation. The references were cited in part in a search report drawn up by the European Patent Office on a corresponding European Patent application. A copy of the Search Report is enclosed, which satisfies the requirement for a brief explanation of relevance of foreign language documents. This paper is submitted in accordance with 37 CFR 1.97(b)(3). A fee is not required for consideration of these documents. However, should a fee be deemed to be due by the Commissioner, such fee should be charged to Deposit Account No. 08-0870.

Respectfully submitted,

Date: Mar. 22, 2006

Robert J. Sacco
Registration No. 35,667
SACCO & ASSOCIATES, P.A.
P.O. Box 30999
Palm Beach Gardens, FL 33420-0999
Tel: 561-626-2222

Certificate Under 37 C.F.R. 1.8(a)
I hereby certify that this correspondence is being deposited with the United States Postal Service with sufficient postage as First Class Mail in an envelope addressed to: Mail Stop Amendment, Commissioner for Patents, P.O. Box 1450, Alexandria, VA 22313-1450 on Mar. 22, 2006. Typed name of person signing this certificate: ROBERT J. SACCO

{00009419;}

OIPE IAP21
MAR 27 2006
PATENT & TRADEMARK OFFICE

PTO/SB/08A (07-05)
Approved for use through 07/31/2006. OMB 0651-0031
U.S. Patent and Trademark Office; U.S. DEPARTMENT OF COMMERCE
Under the Paperwork Reduction Act of 1995, no persons are required to respond to a collection of information unless it contains a valid OMB control number.

Substitute for form 1449/PTO

INFORMATION DISCLOSURE STATEMENT BY APPLICANT

(Use as many sheets as necessary)

Sheet 1 of 2

Complete if Known	
Application Number	10/798,074
Filing Date	March 11, 2004
First Named Inventor	KOVARIK, JR.
Art Unit	2131
Examiner Name	
Attorney Docket Number	7162-0110

U. S. PATENT DOCUMENTS

Examiner Initials*	Cite No.[1]	Document Number Number-Kind Code[2] (if known)	Publication Date MM-DD-YYYY	Name of Patentee or Applicant of Cited Document	Pages, Columns, Lines, Where Relevant Passages or Relevant Figures Appear
		US- 2002/0138322	09/26/2002	UMEZAWA, et al.	
		US- 6,023,765	02/08/2002	KUHN	
		US- 2004/0044655	03/04/2004	COTNER, et al.	
		US-			
		US-			
		US-			
		US-			
		US-			
		US-			
		US-			
		US-			
		US-			
		US-			
		US-			
		US-			
		US-			
		US-			
		US-			

FOREIGN PATENT DOCUMENTS

Examiner Initials*	Cite No.[1]	Foreign Patent Document Country Code[3]-Number[4]-Kind Code[5] (if known)	Publication Date MM-DD-YYYY	Name of Patentee or Applicant of Cited Document	Pages, Columns, Lines, Where Relevant Passages Or Relevant Figures Appear	T[6]
		WO 03/088018	10/23/2003	RAYTHEON CO.		

Examiner Signature		Date Considered	

*EXAMINER: Initial if reference considered, whether or not citation is in conformance with MPEP 609. Draw line through citation if not in conformance and not considered. Include copy of this form with next communication to applicant. [1] Applicant's unique citation designation number (optional). [2] See Kinds Codes of USPTO Patent Documents at www.uspto.gov or MPEP 901.04. [3] Enter Office that issued the document, by the two-letter code (WIPO Standard ST.3). [4] For Japanese patent documents, the indication of the year of the Emperor must precede the serial number of the patent document. [5] Kind of document by the appropriate symbols as indicated on the document under WIPO Standard ST.16 if possible. [6] Applicant is to place a check mark here if English language Translation is attached.

This collection of information is required by 37 CFR 1.97 and 1.98. The information is required to obtain or retain a benefit by the public which is to file (and by the USPTO to process) an application. Confidentiality is governed by 35 U.S.C. 122 and 37 CFR 1.14. This collection is estimated to take 2 hours to complete, including gathering, preparing, and submitting the completed application form to the USPTO. Time will vary depending upon the individual case. Any comments on the amount of time you require to complete this form and/or suggestions for reducing this burden, should be sent to the Chief Information Officer, U.S. Patent and Trademark Office, P.O. Box 1450, Alexandria, VA 22313-1450. DO NOT SEND FEES OR COMPLETED FORMS TO THIS ADDRESS. **SEND TO: Commissioner for Patents, P.O. Box 1450, Alexandria, VA 22313-1450.**

If you need assistance in completing the form, call 1-800-PTO-9199 (1-800-786-9199) and select option 2.

PTO/SB/08B (07-05)
Approved for use through 07/31/2006. OMB 0651-0031
U.S. Patent and Trademark Office; U.S. DEPARTMENT OF COMMERCE
Under the Paperwork Reduction Act of 1995, no persons are required to respond to a collection of information unless it contains a valid OMB control number.

Substitute for form 1449/PTO

INFORMATION DISCLOSURE STATEMENT BY APPLICANT

(Use as many sheets as necessary)

Sheet 2 of 2

Complete if Known	
Application Number	10/798,074
Filing Date	March 11, 2004
First Named Inventor	KOVARIK, JR.
Art Unit	2131
Examiner Name	
Attorney Docket Number	7162-0110

NON PATENT LITERATURE DOCUMENTS

Examiner Initials*	Cite No.[1]	Include name of the author (in CAPITAL LETTERS), title of the article (when appropriate), title of the item (book, magazine, journal, serial, symposium, catalog, etc.), date, page(s), volume-issue number(s), publisher, city and/or country where published.	T[2]
		MEADOWS, C., "Extending the Brewer-Nash Model to a Multilevel Context" IEEE, Proceedings of the Symposium on Research in Security and Privacy. Oakland, May 7-9, 1990	
		STICKEL, M., "Elimination of Inference Channels by Optimal Upgrading" Research in Security and Privacy, 1994. 1994 IEEE Computer Society Symposium in Oakland, CA, May 16-18, IEEE Comput. Soc, 16 May, 2004, pages 168-174	
		DENNING, D., "A Lattice Model of Secure Information Flow" COMMUNICATIONS OF THE ACM, Vol. 19, No. 5, May 1976, pp 236-243.	
		NULL, L., et al., "A Unified Approach for Multilevel Database Security Based on Inference Engines" SIGCSE BULLETIN, ACM, New York, NY Feb. 23, 1989, pp 108-111	
		SAMARATI, et al., "Access Control: Policies, Models, and Mechanisms" Lecture Notes in Computer Science, Springer Verlag, New York, NY Vol. 2171, June 2003, pp 137-196	
		SANDHU, R., "Lattice-Based Access Control Models" Online: URL:http//doi. ieeecomputersociety.org/10.1109/2.241422> retrieved on 10/25/2005	
		BREWER, D., et al., "The Chinese Wall Security Policy" Proceedings of the Symposium on Security and Privacy. Oakland, May 1-3, 1989, Washington, IEEE Comp. Soc. Press, US	
		SANDHU, R., "The Typed Access Matrix Model" IEEE, Proceedings of the Computer Society Sypmsium on Research in Security and Privacy. Oakland, May 4-6, 1992, Los Alamitos, IEEE Comp. Soc. Press, US., Vol. SYMP. 13, May 4, 1992, pp. 122-136	

Examiner Signature		Date Considered	

*EXAMINER: Initial if reference considered, whether or not citation is in conformance with MPEP 609. Draw line through citation if not in conformance and not considered. Include copy of this form with next communication to applicant.

1 Applicant's unique citation designation number (optional). 2 Applicant is to place a check mark here if English language Translation is attached.

This collection of information is required by 37 CFR 1.98. The information is required to obtain or retain a benefit by the public which is to file (and by the USPTO to process) an application. Confidentiality is governed by 35 U.S.C. 122 and 37 CFR 1.14. This collection is estimated to take 2 hours to complete, including gathering, preparing, and submitting the completed application form to the USPTO. Time will vary depending upon the individual case. Any comments on the amount of time you require to complete this form and/or suggestions for reducing this burden, should be sent to the Chief Information Officer, U.S. Patent and Trademark Office, P.O. Box 1450, Alexandria, VA 22313-1450. DO NOT SEND FEES OR COMPLETED FORMS TO THIS ADDRESS. **SEND TO: Commissioner for Patents, P.O. Box 1450, Alexandria, VA 22313-1450.**

If you need assistance in completing the form, call 1-800-PTO-9199 (1-800-786-9199) and select option 2.

EPA-95302

(12) INTERNATIONAL APPLICATION PUBLISHED UNDER THE PATENT COOPERATION TREATY (PCT)

(19) World Intellectual Property Organization
International Bureau

(43) International Publication Date
23 October 2003 (23.10.2003)

PCT

(10) International Publication Number
WO 03/088018 A2

(51) International Patent Classification[7]: G06F 1/00

(21) International Application Number: PCT/US03/10751

(22) International Filing Date: 9 April 2003 (09.04.2003)

(25) Filing Language: English

(26) Publication Language: English

(30) Priority Data:
60/372,489 12 April 2002 (12.04.2002) US
Not furnished 1 April 2003 (01.04.2003) US

(71) Applicant: RAYTHEON COMPANY [US/US]; 141 Spring Street, Lexington, MA 02421 (US).

(72) Inventor: KUNG, Kenneth, C.; 19029 Vickie Avenue, Cerritos, CA 90703 (US).

(74) Agents: DURKEE, Paul, D. et al.; Daly, Crowley & Mofford, LLP, 275 Turnpike Street, Suite 101, Canton, MA 02021 (US).

(81) Designated States *(national)*: AE, AG, AL, AM, AT, AU, AZ, BA, BB, BG, BR, BY, BZ, CA, CH, CN, CO, CR, CU, CZ, DE, DK, DM, DZ, EC, EE, ES, FI, GB, GD, GE, GH, GM, HR, HU, ID, IL, IN, IS, JP, KE, KG, KP, KR, KZ, LC, LK, LR, LS, LT, LU, LV, MA, MD, MG, MK, MN, MW, MX, MZ, NI, NO, NZ, OM, PH, PL, PT, RO, RU, SC, SD, SE, SG, SK, SL, TJ, TM, TN, TR, TT, TZ, UA, UG, UZ, VC, VN, YU, ZA, ZM, ZW.

(84) Designated States *(regional)*: ARIPO patent (GH, GM, KE, LS, MW, MZ, SD, SL, SZ, TZ, UG, ZM, ZW), Eurasian patent (AM, AZ, BY, KG, KZ, MD, RU, TJ, TM), European patent (AT, BE, BG, CH, CY, CZ, DE, DK, EE, ES, FI, FR, GB, GR, HU, IE, IT, LU, MC, NL, PT, RO, SE, SI, SK, TR), OAPI patent (BF, BJ, CF, CG, CI, CM, GA, GN, GQ, GW, ML, MR, NE, SN, TD, TG).

Declarations under Rule 4.17:

— *as to the identity of the inventor (Rule 4.17(i)) for the following designations AE, AG, AL, AM, AT, AU, AZ, BA, BB, BG, BR, BY, BZ, CA, CH, CN, CO, CR, CU, CZ, DE, DK, DM, DZ, EC, EE, ES, FI, GB, GD, GE, GH, GM, HR, HU, ID, IL, IN, IS, JP, KE, KG, KP, KR, KZ, LC, LK, LR, LS, LT, LU, LV, MA, MD, MG, MK, MN, MW, MX, MZ, NI, NO, NZ, OM, PH, PL, PT, RO, RU, SC, SD, SE, SG, SK, SL, TJ, TM, TN, TR, TT, TZ, UA, UG, UZ, VC, VN, YU, ZA, ZM, ZW, ARIPO patent (GH, GM, KE, LS, MW, MZ, SD, SL, SZ, TZ,*

[Continued on next page]

(54) Title: SYSTEM AND TECHNIQUES TO BIND INFORMATION OBJECTS TO SECURITY LABELS

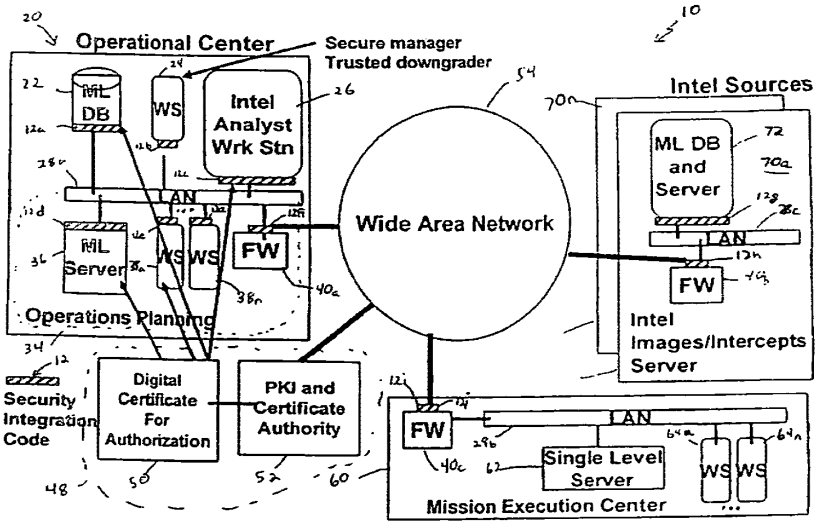

(57) Abstract: A method to providing multilevel security for a data object requested by a workstation user includes providing a security label for the data object, associating security rules including a security clearance level for the data object with the security label, binding the security label to the data object, validating the correctness of the security label, associating the user's security clearance level with at least one user certificate, verifying the at least one user certificate, and determining whether the user has clearance to receive the requested data.

WO 03/088018 A2

BEST AVAILABLE COPY

UG, ZM, ZW), Eurasian patent (AM, AZ, BY, KG, KZ, MD, RU, TJ, TM), European patent (AT, BE, BG, CH, CY, CZ, DE, DK, EE, ES, FI, FR, GB, GR, HU, IE, IT, LU, MC, NL, PT, RO, SE, SI, SK, TR), OAPI patent (BF, BJ, CF, CG, CI, CM, GA, GN, GQ, GW, ML, MR, NE, SN, TD, TG)

— *as to applicant's entitlement to apply for and be granted a patent (Rule 4.17(ii)) for the following designations AE, AG, AL, AM, AT, AU, AZ, BA, BB, BG, BR, BY, BZ, CA, CH, CN, CO, CR, CU, CZ, DE, DK, DM, DZ, EC, EE, ES, FI, GB, GD, GE, GH, GM, HR, HU, ID, IL, IN, IS, JP, KE, KG, KP, KR, KZ, LC, LK, LR, LS, LT, LU, LV, MA, MD, MG, MK, MN, MW, MX, MZ, NI, NO, NZ, OM, PH, PL, PT, RO, RU, SC, SD, SE, SG, SK, SL, TJ, TM, TN, TR, TT, TZ, UA, UG, UZ, VC, VN, YU, ZA, ZM, ZW, ARIPO patent (GH, GM, KE, LS, MW, MZ, SD, SL, SZ, TZ, UG, ZM, ZW), Eurasian patent (AM, AZ, BY, KG, KZ, MD, RU, TJ, TM), European patent (AT, BE, BG, CH, CY, CZ, DE, DK, EE, ES, FI, FR, GB, GR, HU, IE, IT, LU, MC, NL, PT, RO, SE, SI, SK, TR), OAPI patent (BF, BJ, CF, CG, CI, CM, GA, GN, GQ, GW, ML, MR, NE, SN, TD, TG)*

— *as to the applicant's entitlement to claim the priority of the earlier application (Rule 4.17(iii)) for all designations*

— *as to the applicant's entitlement to claim the priority of the earlier application (Rule 4.17(iii)) for all designations*

Published:

— *without international search report and to be republished upon receipt of that report*

For two-letter codes and other abbreviations, refer to the "Guidance Notes on Codes and Abbreviations" appearing at the beginning of each regular issue of the PCT Gazette.

SYSTEM AND TECHNIQUES TO BIND INFORMATION OBJECTS TO SECURITY LABELS

FIELD OF THE INVENTION

This invention relates generally to multilevel security systems and more particularly to systems and techniques to to bind data objects to security labels.

BACKGROUND OF THE INVENTION

In commercial and military information technology applications, it is often desirable to control access to information having different levels of security. In a multilevel secure computer system, where not all users are trusted to handle all data objects, mandatory access control mechanisms are oftened used to enforce a multilevel security policy. The mandatory access control mechanisms determine whether a particular user has the proper privilege (via his or her security clearance level or other privilege indicator) to access a data object.

In conventional secure operating systems, a security label is often associated with specific data files. These files are protected by the secure operating system. However, when these files are exported from the operating system, the receiving system cannot alsways ascertain the trustworthiness of the security label and the file. Without this trust, all users must be trusted at a level equal to the highest clearance levelr in order to see to see all information within the system. This is an expensive solution and unworkable when operating in joint or coalition military environments. Conventional methods to protect information in transit include encrypting the data with a different key for each security level. This protection stops as soon as the information is decrypted at an information receiving system.

It would, therefore, be desirable to control the distribution of data objects within a multilevel security system. It would be further desirable to securely bind a security label to an object and enforce a multilevel security policy in a distributed environment.

SUMMARY OF THE INVENTION

In accordance with the present invention, a method to providing multilevel security for a data object requested by a workstation user includes providing a security label for the data object, associating security rules including a security clearance level for the data

object with the security label, binding the security label to the data object, validating the correctness of the security label, associating the user's security clearance level with at least one user certificate, verifying at least one user certificate, and determining whether the user has clearance to receive the requested data.

With such an arrangement, a low cost multilevel security system is provided which controls the distribution of data objects within a multilevel security system by securely binding a security label to a data object and enforcing the associated security rules in a distributed environment. In addition, the multilevel security protection is extended into the respective operating systems and provides finer access control for granting the user access privilege based on both security levels and the handling instructions (e.g., no foreign access, but releasable to UK, Canada and Australia). The multilevel security protection can be applied to individual files, paragraphs, sentences, words, and the data bit level.

BRIEF DESCRIPTION OF THE DRAWINGS

The foregoing features of this invention, as well as the invention itself, may be more fully understood from the following description of the drawings in which:

FIG. 1 is a block diagram of a multilevel security, multilevel protection (MLS/MLP) system including security integration code and information network according to the invention;

FIG. 2 is a flow diagram illustrating the steps to login to the MLS/MLP system of FIG. 1, and to request and receive data objects;

FIG. 3 is a flow diagram illustrating the steps to launch an application and receive a remote data object from the MLS/MLP system of FIG. 1;

FIG. 4 is a flow diagram illustrating the steps to enforce the security rules included in a security label provided by the MLS/MLP system of FIG. 1;

FIG. 5 is a flow diagram illustrating the steps to issue a mission execution order using the MLS/MLP system of FIG. 1.

FIG. 6 is a schematic diagram of a multilevel secured data object includes a security label, data object, and digital signature according to the invention;

FIG. 7 is an exemplary representation of multiple levels of security in an electronic document modeled as a collection of eXtensible Markup Language (XML) tags according to the invention;

ENSDOCID: <WO_____03088018A2_I_>

VMware Ex. 1002
Page 160 of 257

FIG. 7A is an exemplary XML Security Label data type definition for the Security Label of FIG. 7;

FIGs. 8 and 8A illustrate a set of security levels and a set of categories combined to form a partial ordering; and

FIG. 9 illustrates authorized and unauthorized transactions accessing secure data objects

DETAILED DESCRIPTION OF THE INVENTION

Before providing a detailed description of the invention, it may be helpful to define some of the terms used in the description. As used herein, "security integration code" refers to a distributed application, which provides some of the multilevel security, multilevel protection functions described below. The functions of the security integration code can be distributed over the various workstations, platforms, database engines, and network components. A multilevel security, multilevel protection system is also referred to as a MLS/MLP system.

As used herein, the term "data object" includes a file, part of a file, a paragraph, a sentence, a word, a database field, or a column or a row in a relational database table. The data object (also referred to as an information object) can also include an image and, if distinguishable, a portion of an image.

The term "security label," as used herein, refers to data associated with a particular data object which includes one or more security rules, for example a security level classification, and can optionally include restrictions, caveats, handling instructions and other security related data for controling access to the data object. A data object having a associated security label is referred to as a secure data object.

The term "hierarchical components" refers to a security structure having a linear order such as TOP SECRET, SECRET, classified and unclassified classifications. The term "non-hierarchical components" refers to, for example, classifications such as, "noforn" (non-releasable to foreigners), "nuclear" (related to nuclear weapons), "intel" (related to intelligence activities) which are not put in any linear order.

The term "caveats," as used herein, refers to additional rules and restrictions placed on how data objects may be used, by the "owner" or provider of the object. The restrictions can include a list of users to whom the object can be released. These additional rules and restrictions are placed in the security label.

BNSDOCID: <WO_____03088018A2_I_>

VMware Ex. 1002
Page 161 of 257

Referring now to Fig. 1, an exemplary multilevel security, multilevel protection system 10 includes an operational center 20 having at least one intelligence (Intel) analyst workstation 26 (also referred to as a user workstation, an Intel workstation or an application workstation) coupled to a local area network (LAN) 28a and running a portion 12c of a distributed application referred to as security integration code 12. The operational center 20 further includes a multilevel protection database (ML DB) 22 (also referred to as a multilevel security database MLS DB), and a secure manager trusted downgrader work station 24, each of which is coupled to LAN 28 and running portions of the security integration code 12a and 12b respectively. The operational center 20 further includes an operations planning component 34 having a multilevel protection sever (MLServer) 36, a plurality of workstations (WS) 38a-38n and a firewall 40a, each of which is coupled to LAN 28 and running further portions of the security integration code 12d, 12e and 12f respectively. The firewall 40a is further coupled to a wide area network (WAN) 54 via the portion of the security integration code 12f.

The operational center 20 is coupled to a PKI infrastructure 48 comprising a certificate authority 52 which provides a plurality of digital certificates 50 to the workstations and servers of the operational center 20. A plurality of intelligence (Intel) sources 70a-70n (generally referred to as Intel source 70) are coupled to the operational center 20 and to a mission execution center 60 through the WAN 54. Each Intel source 70 includes a multilevel protection database (ML DB) 72 coupled to a LAN 28c which is coupled to a firewall 40b. Each Intel source 70 collects information from related sources and files the information in the local database. Secure access to the Intel sources 70 provides aggregation of the data from various agencies. The firewall 40b is further coupled to a wide area network (WAN) 54. Both the (ML DB) 72 and the firewall 40b include portions of the security integration code 12g, and 12h respectively.

The mission execution center 60 includes a single level server 62 coupled to a LAN 28b which is coupled to a firewall 40c. The single level server 62 classifies information at one security level, regardless of the true classification of data due to the underlying system inability to protect data at multiple security levels. The firewall 40b is further coupled to a wide area network (WAN) 54. The firewall 40c includes security integration code 12i

The LANs 28a-28c can be hardwired or secure wireless LANS using 802.x protocols. The WAN 54 interconnects the mission execution center 60, the operational center 20 and one or more Intel source 70 by one or more logical links typically

BNSDOCID: <WO_____03088018A2_I_>

VMware Ex. 1002
Page 162 of 257

implemented using secure Internet protocols, for example IPSEC. Data leaving the operational center 20 can be encrypted and can be encrypted again when entering the WAN 54. The servers 36, 62, and 72 include portions of the security integration code 12 to control the distribution of data objects having security labels before processing of the data objects by services and resources on the servers 36, 62, and 72. Each portion of the security integration code 12a-12i can be viewed as a security integration code processor securely networked together to control the distribution of data objects.

It will be appreciated by those of ordinary skill in the art that the exemplary multilevel security, multilevel protection system 10 includes can include personal computers and other hardware devices, which can operate workstations, databases and servers providing resources. It will be appreciated by those of ordinary skill in the art that the connections among the various components in the operations center 20 can include but is not limited to routers, bridges and other networking components resulting in alternative network topologies. The operating system and firewalls 40 are augumented with the security integration code 12 to protect data from unauthorized intrusion.

The security integration code 12a-12i (collectively referred to as the security integration code 12) is implemented on various computing platforms and network components of the multilevel security, multilevel protection system 10 as a distributed application. The security integration code 12 has a component which runs on at least one intel analyst work station 26 and the secure manager trusted downgrader workstation 24. Portions of the security integration code also run on the firewalls 40, the ML DB 22, the ML server 36, and operations planning workstations 38.

The security integration code 12 provides the protection processing of the secure data objects. The security integration code 12 can be implemented at several levels in the host processors, workstations, file servers, or any computer that processes secure data objects. The security integration code 12 can be located for example in the network protocol stack or at the interface between the operating system and the network interface. In operation, the security integration code 12 detects data objects having security labels leaving or entering the workstation, server, network devices, etc. The security integration code 12 guarantees that no unauthorized information can bypass the security integration check provided by the security integration code 12 (described in further detail in conjunction with FIGs. 3,and 7-9).

BNSDOCID: <WO_____03088018A2_I_>

VMware Ex. 1002
Page 163 of 257

In a first embodiment, the security integration code 12 is inserted in the network protocol stack. As the secure data objects enter a computer system through the network connection, the secure data objects pass through the network protocol stack. Before information is passed from the protocol layer through the security integration code 12 to a higher layer protocol, the security integration code 12 checks the access rights of a user requesting the data object from the Intel workstation 26 and with security rules included in an eXtensible Markup Language (XML) security label carried within the information content. If the user is not allowed to view the information represented by the security label, the content of that information is not passed to the user. In the network layer, checking is performed to assure that the XML security label is included in each network packet including secure data objects to allow validation of security rule enforcement. In particular, if the security integration code 12 checking is implemented in the transport layer (e.g., TCP or UDP protocols), then the XML security label is included in each transport layer protocol data unit.

The security label is inserted into the appropriate protocol data unit (e.g., network packet or transport protocol data unit) for information leaving the workstation. The security clearance level in the security label is the security clearance level of the current user on the host machine. If the underlying workstation operating system supports the multilevel security mechanisms, then the security label is securely passed from the operating system to the security integration code 12. If the underlying operating system is trusted to pass the security label to the security integration code 12, then the appropriate security label will be provided by the security integration code 12. The operating system is multilevel secure (MLS) if it is trusted to associate security label to the data. Additional XML security labels could be embedded within the data (i.e., a security label is attached to data within a file). Additional security labels include information on how to handle the data, for example, an instruction providing that the data may be downgraded in 5 years from January 3, 2003.

In a second embodiment, the security integration code 12is implemented within each underlying operating system interface to the network and the network communication protocol stack on the corresponding server, workstation or database. Secure data objects leaving the operating system and entering the network include security labels having the appropriate security clearance levels. If the underlying operating system is not multilevel secure, then the security clearance level of the data is

BNSDOCID: <WO_____03088018A2_I_>

VMware Ex. 1002
Page 164 of 257

the security clearance level of the user logon session. Alternatively, the highest clearance level of the user is used for the security label. If the underlying operating system is a multilevel secure system, then the security level of the process calling the network communication stack is used as its security label.

In a third embodiment specifically designed to operate with the Apple Computer OS, an approach similar to the Apple Computer File Management Tool Kit is used. In Apple Operating System, each time a user wishes to open, close, modify, create, or manipulate a file, the action must be passed to the file management tool kit. In this particular embodiment, the security integration code 12 is integrated with the file management tool kit to provide access to the secure data objects and associated security labels.

In processing the access control check, the security integration code 12 matches the user's session security level with the security level included in the security label, for example an XML security label (described in further detail in conjunction with FIGs. 7 and 7A). A dominance relationship (as described in further detail in conjunction with FIGs. 8 and 8A) is used in the processing of the security label. However, the processing for the caveat handling instruction within the security label is determined prior to generating the instructions. For example, the handling instructions could include the instruction that content is releasable to Canadian and UK, but not other foreigners. The security integration code 12 ascertains whether the user on the host machine is a US, Canadian, or UK citizen. To handle this type of caveat handling instructions, the security integration code 12 knows the meaning of the handling instruction when the security label is created. Logic is added to the security integration code to handle special handling instructions.

In operation, a mandatory access control mechanism implemented by the security integration code 12 determines the correct access control only if the security label of the data object is presented without any tampering, and can be trusted. Mandatory access control is a department of Defense (DoD) term that indicates the access control is required to meet the security policy, and is not at the discretion of the users. In one embodiment, an extensible markup language (XML), a secure hashing algorithm, and a digital signature are used to bind a data object to its security label. The data objects can be individual data (record) in a database, a view in a database, a specific word, a specific paragraph, a specific file, digital image; or any combination of electronic representation of digital

BNSDOCID: <WO_____03088018A2_I_>

VMware Ex. 1002
Page 165 of 257

information. The security label associated with each secure data object is used to enforce the mandatory access control rules stated by the security policy.

The secure manager trusted downgrader workstation 24 manages the security of the MLS/MLP system 10. The secure manager trusted downgrader work station 24 runs special code to change the embedded security level to a lower or another level, without violating the security policy. It is understood that the secure manager trusted downgrader workstation 24 can be implemented perform the trusted downgrade function on a separate workstation. The secure manager trusted downgrader workstation 24 collects the audit information from various platforms within the operational center 20, performs trusted downgrading and performs an intrusion detection function. The intrusion detection system detects malicious activities within the operation center 20. A new security label is generated by the secure manager trusted downgrader work station 24 for binding with data objects to provide secure data objects. The new security label is associated with the data object when the downgrade is approved.

By providing a mechanism for securely binding the security label to an object, the security policy is enforced in a distributed environment. The security label includes both the clearance level (hierarchical levels), and the compartments (non-hierarchical caveats). The mandatory access control mechanism operating on each workstation can validate the correctness of the security label for any data object arriving at the workstation and determine whether the user on that workstation has the proper clearance to receive the data object.

When the data object includes classified data, it is labeled with the highest classification included within that data object. The security label includes a hierarchical level plus a set of non-hierarchical handling instructions. The security label is then used by the mandatory access control code (enforced by security integration code 12) to determine whether the user on the workstation has the proper clearance to access the data object.

The security integration code 12 checks the mandatory access control, and the security integration code 12 must have the assurance that the security label has not been tampered either during transit or storage of the security label.

In one embodiment an extensible markup language (XML) is used to define the data object and its associated security label, and digitally sign the hash value that is derived from the data object and its security label. The digital signature prevents corruption or

BNSDOCID: <WO_____03088018A2_I_>

VMware Ex. 1002
Page 166 of 257

tampering of the data and the security label. It is signed and verified by the security integration code 12 at the sending node and receiving node, respectively. In one embodiment, the signing process includes the following four steps. First, XML elements are used to define the boundary of the data object for which the security label is assigned. Next, the security label includes the hierarchical and non-hierarchical components. The security label usually includes the security clearance level derived from the login session for the workstation originating the request for information. XML provides the processing instruction on how to interpret the security label. The processing instruction can be placed before the data object, within the data object or at the end of the data object. The XML notation attribute defines the application (i.e., Security Integration Code, the hashing algorithm, and digital signature mechanism) needed to do the processing. Next, a hashing algorithm is used to derive a digital digest from the security label and the data object. Finally, a digital signature is used to sign the digital digest.

An exemplary scenario for a multilevel security (MLS) application as implemented with the present invention includes one or more Intel operator in the operation center running applications on the Intel Analyst workstation 26. In conjunction with the application, the Intel operator accesses information from the MLS database 22 and MLS file server 36. The Intel operator can also use a collaboration tool, which interrogates remote centers, e.g. Intel sources 70, for additional information and retrieves the information, and transmits the information to local operational center 20. The Intel operator aggregates information from the above sources to determine the situation, before issuing a subsequent course of action. The course of action is subsequently transmitted to the mission execution center 60.

The information that the Intel Operator requests from the MLS DB 22 and ML File Server 36 is delivered in the form of secure data objects each having an associated security label. The security integration code 12 checks the security label after the data and security label are returned to the workstation. Mandatory access control check is performed to meet the MLS/MLP (multilevel protection) rules. Security label caveats and handling rules are enforced. After these checks explicitly grant access, the information is passed to the application program that made the original request on the user's behalf. The Intel operator uses the information to do the analysis. Intel operator writes data out to the database, file server, or sends message via the network. Data leaving the workstation is associated with a security label equal to the security level of the log in session of the user.

BNSDOCID: <WO_____03088018A2_I_>

VMware Ex. 1002
Page 167 of 257

If data leaving is taken from the database and file server, the corresponding security label that come with the data is also attached. The generation and attachment of security labels are performed by the security integration code 12. Collaboration and data mining tools determine whether additional information should be retrieved from remote locations (e.g., Intel sources 70).

In one embodiment, the system 10 the workstations, servers and databases operate on trusted operating systems, (for example, Trusted Solaris, Secure Linux, etc.). In this embodiment, trusted handshaking is used between security integration code 12 and the underlying operating system. A secure protocol, for example, IPSEC (Internet standard) is used to protect transmission among workstations having security integration code 12. Firewalls 40 are also IPSEC enabled. These measures protect all communication paths. The security integration code 12 is non-bypassable as is required in the MLS/MLP system 10. The security integration code 12 intercepts any data requests from the user workstation to the database or data files. The security integration code 12 can be hosted onto trusted UNIX platforms, and the trusted code is tied to the underlying trusted operating system.

It will be appreciated by those of ordinary skill in the art that the data objects can be encrypted or alternatively encrypted in transit to provide a higher level of security, but the system does not require any use of encryption to provide multilevel security. Transmission among workstations, databases, and file servers that are local or remote can be encrypted. Collaboration and data mining tools make initial requests to remote sites. When the data object is returned, the now secure data object includes the security label. When information is returned to the Intel Operator on the workstation, the security integration code performs the mandatory access control, caveats, and handling instruction checks.

Information transmitted among the MLS components is protected with IPSEC protocol. Traffic leaving or entering the Operation Center must be protected with IPSEC at the firewall (FW). IPSEC protects the confidentiality of information, and integrity of the security label. It will be appreciated by those of ordinary skill in the art that other secure protocol in addition to IPSEC may be used to provide security for the transmitted information.

Referring now to FIG. 2, a flow diagram illustrates a process for user login to the MLS/MLP system 10 of FIG. 1 and to launch a requested application. The process begins at step 120, after which at step 122 the user, here an Intel analyst, logs onto the

BNSDOCID: <WO_____03088018A2_I_>

VMware Ex. 1002
Page 168 of 257

workstation, by specifying a login ID, password, security level for the session, and role for the session in conjunction a request for access to a data object. The login procedure can also include biometric information provided by the analyst. At step 124, as part of the log in process, the Intel analyst inserts an identification document, for example a government issued smart card. The smart card includes a set of digital certificates. A certificate authority service or software component issues the digital certificate adapted to be stored on a smart card. The digital certificate includes the user's security clearance level, for example, TOP SECRET, Secret, Confidential, Unclassified; clearance caveats, for example, COMSEC, Nuclear, U.S. Citizen; authorizations, for example, work on project XY123; and permitted roles, for example, system admin, security officer, air traffic control, tomahawk missile operator. The digital certificate can also include information related to the user's identity.

At step 126, the public key infrastructure (PKI) and one or more certificate authorities are accessed to authenticate the user's certificate. At step 128 it is determined whether the digital certificate is valid and that the digital certificate is not on the certificate revocation list. If the digital certificate is valid and not on the certificate revocation list processing continues at step 130, otherwise processing continues at step 132.

At step 130, the analyst's login and role are transferred to the portion of the security integration code 12 on the Intel workstation 26 to be used at step 144 to enforce security rules. Processing continues at step 136. At step 131, the analyst requests a specific data object from ML File Server 36 or ML DB 22. It will be appreciated by those of ordinary skill in the art that the request may be an explicit request for the specific data object or the request can result for the action of an application program execution on the Intel workstation 26.

At step 132, the user's login session is dropped because the digital certificate has been revoked or the user's login request is not within predetermined security parameters. Processing terminates at step 134, after the login failure audit information is sent to the security manager application on the secure manager trusted downgrader work station 24, and processing terminates at step 149.

At step 136, the secure manager trusted downgrader workstation 24 (FIG. 1) provides a security label for the data. A user with the appropriate role authorizes the downgrading action. At step 138, the secure manager trusted downgrader workstation 24 associates security rules including a security clearance level for the data object with the

BNSDOCID: <WO_____03088018A2_I_>

VMware Ex. 1002
Page 169 of 257

security label. At step 140, the secure manager trusted downgrader workstation 24 binds the security label to the data object forming the secure data object. At step 142, it is determined, after the secure data object reaches the analyst's workstation 26, by the portion of the security integration code 12c on the workstation 26 whether the security label is valid. If the security label is valid processing continues at step 144. Otherwise processing continues at step 148.

At step 144, it is determined whether the user has clearance to receive the requested data object. The determination involves, for example, comparing the user's security clearance level to the security clearance level required to access the data object. If provided in the security rules included in security label, the security integration code 12 performs other checks such as security category, clearance caveats and permitted roles. Other authorizations and handling instructions can also be provided and processed by the security integration code 12. If the analyst has clearance to receive the requested data object, processing continues at step 138 otherwise processing continues at step 132.

At step 146, the Intel workstation's access control mechanism in conjunction with the security integration code 12 allows the user to access the requested data object, and processing terminates at step 149. At step 148, the security label has been determined to be invalid and security label validation failure audit information is sent to the security manager on the secure manager trusted downgrader work station 24, and processing terminates at step 149.

Referring now to FIG. 3, a flow diagram illustrates an exemplary process to launch an application and request a remote data object from the MLS/MLP system 10. The process begins at step 150, after which at step 152 the user, here an Intel analyst, requests that a specific application be launched. It will be appreciated by those of ordinary skill in the art that in addition to allowing access to secure data objects, the security integration code 12 can allow the user to launch and run a secure application. As allowed by the assigned roles, the user can select approved application programs to execute. For example, an air defense operator can launch an application to check on the weapon status for air defense guns and missles. At step 154, the workstation 26 (FIG. 1) access control mechanism verifies the authority of the analyst to launch application. At step 156, the user requests specific information be retrieved from ML File Server 36, ML DB 22, or explicitly from a remote source (e.g., Intel source 70).

BNSDOCID: <WO_____03088018A2_I_>

VMware Ex. 1002
Page 170 of 257

At step 158, it is determined whether the requested data is local to the ML File Server 36 or ML DB 22. If the data is local processing continues at step 162. Otherwise, processing continue at step 160. At step 160, the data is securely requested and retrieved including the security label and handling instructions from a remote source, for example the Intel source 70a (FIG. 1).

At step 162, the request data is returned to security integration code for a mandatory access control check. The security label caveats and handling rules are enforced at this time (as described in more detail in conjunction with FIG. 4).

At step 164 if is determined whether the MLS rules are satisfied. If the MLS rules are satisfied, data is returned to the user at step 162. Otherwise, the MLS security rule checks have failed and audit information is sent to the secure manager trusted downgrader work station 24 at step 168 and processing resumes at step 152 where additional requests to launch applications are initiated. Only after these checks explicitly grant access, is the data object passed to the application program that made the original request on the analyst's behalf. The Intel operator uses the information to do the analysis and writes the resulting analysis data back out to the database, file server, or sends messages via the network using security labels and the security integration code 12.

The security integration code 12 is non-bypassable (i.e., the security integration code 12 is trusted). This is a MLS/MLP requirement. The security integration code 12 is able to intercept any data requests from the user workstation to the database or data files. The security integration code 12 can be hosted, for example, onto any UNIX platform. The trusted security integration code 12 is interfaced to the underlying trusted operating system.

Referring now to FIG. 4, a flow diagram illustrates an exemplary process for enforcing the security rules in a security label. The process begins at step 170, after which at step 172 the security integration code 12 detects a secure data object and the security label associated with the secure data object in a network transmission. The checks in step 178 and 180 ensure that the requester (e.g., the analyst) is allowed to receive the information.

At step 174 the security integration code 12 verifies whether the security label is valid. The XML specifications (as described in more detail in conjunction with FIGs. 7 and 7A) are used to find out the boundary of the data object and a digital signature. The digital signature is checked to make sure the data object and the security label have not

BNSDOCID: <WO_____03088018A2_I_>

VMware Ex. 1002
Page 171 of 257

been modified during transmission. A hashing algorithm and the digital signature algorithm are used as defined in the XML specifications. After verifying the digital signature, the security integration code 12 has the assurance that the security label has not been tampered either during the transit or in storage.

At step 176 the security integration code 12 extracts the MLS security rules (also referred to as security rules). It is understood, that the security integration code 12 may not be bypassed by the user to access information from ML DB 22 and ML Server 36. The binding of the security label to the information is described in conjunction with FIG. 6.

At step 178, the security integration code 12 applies the security rules to enforce the MLS mandatory access control by determining whether the analyst's access class dominates the access class of the data object. It is determined whether the analyst's security clearance as validated in conjunction with the digital certificate, allows access to the secure data object. In one embodiment, the security label is implemented in XML and is associated with specific data objects including files, portions of files and database objects, and is digitally signed to prevent tampering. When the data object includes classified data, it must be labeled with the highest classification included within that data object. This security label includes a hierarchical level plus a set of non-hierarchical handling instructions (described in conjunction with FIGs. 8 and 8A). This security label is then used by the mandatory access control code (enforced by security integration code 12 to determine whether the analyst on the Intel workstation has the proper clearance to access this data. If it is determined that the analyst's access class dominates the access class of the data object processing continues at step 180. Otherwise processing continues at step 184.

At step 180, it is determined whether the requested transaction is allowable. A transaction includes reading and writing data objects having different security levels from the application process (as determined from the analyst's logon security level). Downgrading the security level of a data object generally involves multilevel transactions (described in conjunction with FIG. 9). Transactions can also be prohibited by specific handling instructions as provided by caveats in the security label. For some situations, the user of the system is permitted to perform only a certain set of actions. If that is the case, step 180 can enforce this restriction. If the requested transaction is allowable processing continues at step 182. Otherwise processing continues at step 184.

NSDOCID: <WO_____03088018A2_I_>

VMware Ex. 1002
Page 172 of 257

At step 182, the data object is returned to the analyst, and processing resumes at step 172 to detect additional security labels. At step 184, the request for the data object is denied and audit information is sent to the secure manager trusted downgrader workstation 24.

Data objects that have been classified in error can be detected by looking through the entire data object for XML security labels. The data object should carry the highest classification security label as aggregated from all the security labels within it. The downgrader workstation can regradethe security label of the data object to the proper aggregation of the security labels contained within it. The security analyst discussed below verifies the new security label to ensure that the correctness. The security analyst also verifies that the higher security level is due to the aggregation of information. If the aggregation causes the total data object at a higher classification, then the proper security level is assigned to the data object.

Now referring to FIG. 5, a flow diagram illustrates an exemplary process to issue a mission execution order (e.g., an order from an air base to an F16 fighter crew) using the MLS/MLP system of FIG. 1. The process begins at step 210, after which at step 212 a message is generated to be transmitted to the mission execution center. At step 214 the analyst requests that the message be downgraded to appropriate security level for Mission Execution Center.

Analysts may propose to downgrade a specific security label associated with a specific data object. The data object generated by the analyst is classified at the level that the analyst login session defines. This level may be at a higher level than the mission execution center can receive. The analyst must make sure the content of the data object contains no information higher than the proposed new security label, as the analyst should be in the best position to know this.

In one embodiment, the system requires that a second analyst, with access to a data object, "cosign" the request to downgrade the specific security label. Alternatively, the owner of the data object can downgrade the specific security label of the secure data object (described in conjunction with FIGs 9 and 9A).

At step 216, the secure manager trusted downgrader workstation 24 verifies that the data is appropriate for the proposed security level (according to the criteria described in conjunction with FIG. 9). At step 218, it is determined whether the data is appropriate for the proposed security level. If the data is appropriate for the proposed security level, the

BNSDOCID: <WO_____03088018A2_I_>

VMware Ex. 1002
Page 173 of 257

secure manager trusted downgrader workstation 24 provides a security label at step 220. Otherwise, downgrading is not possible and audit information is sent to the secure manager trusted downgrader workstation 24 in step 224, and processing terminates at step 226.

At step 220, the data object with the associated security label (i.e., the secure data object) is returned to the Intel workstation 26. At step 222, the Intel workstation 26 transmits the message including the tasking order to mission execution center 60, and processing terminates at step 226.

In an alternative embodiment, the system 10 optionally includes a "sniffer" (network protocol monitor, for example Raytheon Company's Silent Runner), operating on the secure manager trusted downgrader workstation 24 for providing additional security management tools for managing the system 10. In a further alternate embodiment, the system 10 includes an automatic communications filter operating on the secure manager trusted downgrader work station 24 (e.g. Lockheed Martin Corporation's Radiant Mercury system) for automatically sanitizing information transmitted between secured gateways in the network searching for keywords which should not be passed through the gateway.

Now referring to FIG. 6, an exemplary multilevel secured data object 300 includes a data object 302 (also referred to as an information object 302), a security label 304 and a digital signature 306. The security label is bound to any form of data objects. The security label 304 is embedded with the data object 302. The security label 304 is transported via the secure communications network (local 28 or wide area network 54) to maintain the integrity and trustworthiness of the security label 304.

The security label 304 can be processed by different operating systems to facilitate interoperability. In one embodiment, XML is used to represent the security label, the intent of the information owner on how to protect the data object, is transmitted within the security label 304 as a set of security rules to the receiving workstation. The security rules included in the security label 304 direct the receiving workstation to perform the clearance checks for access to the data objects and possible modification of the security clearance level of the data objects.

In processing the security rules, the security integration code 12 compares the user's session security level with the security level included in the XML security label. For example, the analyst's session security level as provided in the analyst's

BNSDOCID: <WO_____03088018A2_I_>

VMware Ex. 1002
Page 174 of 257

digital certificate and the security level included in the XML security label 304 are compared with respect to a security dominance relationship. The dominance relationship is described in conjunction with FIGs. 8 and 8A. The security rules can also provide additional handling instructions referred to as caveats. The rules for processing for the caveat handling instructions within the security label are determined prior to use.

For example, the handling instruction can include a rule that content is releasable to Canadian and UK citizens, but not other foreigners. The security integration code ascertains whether the analyst on the Intel workstation is a US, Canadian, or UK citizen. The analyst's citizenship is verified at login time by means of the analyst's digital signature. To handle this type of caveat handling instructions, the security integration code 12 knows the meaning of the handling instruction when the security label is created.

Now referring to FIG. 7 and 7A, an exemplary representation of multiple levels of security in an electronic document includes a plurality of eXtensible Markup Language (XML) tags. The XML model includes a hierarchical document format beginning with the <SecureDocument> container tag 312. The SecureDocument includes multiple labeled elements of the secure document encapsulated within the <SecurityLabel> container. The actual document content is included within the <DataObject> container 318 and may include encrypted text, graphics or a link to an external document. The <DataObject> container 318 may specify encryption characteristics of the secured data. Additional details of the encryption model and the specification of encryption parameters are optionally provided.

Now referring to FIG. 7A, an exemplary XML Security Label data type definition for the Security Labels includes the DataObject 318, SecureDocument 312 and SecurityLabel 314 elements. The DataObject element 318 may include arbitrary data. The SecureDocument element 312 includes one or more SecurityLabels 314. The SecurityLabel includes one or more DataObjects 318. Each SecurityLabel element 314 includes several attributes, here for example, Level, Compartment, HandlingInstruction and Caveat. The Level and Compartment attributes are required and the HandlingInstruction and Caveat attributes are optional.

BNSDOCID: <WO_____03088018A2_I_>

VMware Ex. 1002
Page 175 of 257

In the XML example of FIG. 7A, the secure document specification includes one <SecureDocument> container 314 with four secure parts included in a <SecurityLabel>. The secure parts are included in a <DataObject> container. In this example the data parts are not encrypted. It is noted that the document has data objects with multiple levels of security including hierarchical and non-hierarchical components, for example:

1. Security Level: SECRET, Compartment: NOFORN;
2. Security Level: TOP SECRET, Compartments: A, Handling Instruction: Downgrade by the authority of the originator Caveat: Releasable to UK, Japan, and Canada
3. Security Level: Confidential, Compartment: NOFORN; Handling Instruction: Not to be downgraded until Jan 1, 2019; Caveat: Not Releasable to NATO

Specific process instructions included in the XML specifications are performed. For example, "Not to be downgraded until Jan 1, 2019" means the downgrader may not downgrade the data object. "Not releasable to NATO" means the analyst should know that the data object may not be delivered to a network address in Europe (i.e., IPv6 addresses have been divided out by continents. So this check can be processed automatically.)

Now referring to FIGs. 8 and 8A a set of security levels 400 and a set of categories 402 are combined to form a partial ordering 410. The security levels 400 are generally linearly ordered hierarchical components, for example:

Unclassified < CONFIDENTIAL< SECRET < TOP SECRET.

In order to obtain information within the MLS/MLP rules, an analyst must possess an access class whose level is greater than or equal to the level of the access class of the secure data object. Categories 402, for example Nuclear andNATO, are generally non-hierarchical components independent of each other and not ordered. To obtain access to secure data objects, a user must possess an access class whose category set includes all the categories of the access class of the secure data object to be accessed. Combining the security levels, which form a lattice, and categories forms the partial ordering 410.

Now referring to FIG. 9, a set of authorized transactions 452-458 and a set of unauthorized transactions 460-464 accessing secure data objects in a secret file 442 and an unclassified file 444 are shown. In one embodiment, an analyst executing a pair of

BNSDOCID: <WO_____03088018A2_I_>

VMware Ex. 1002
Page 176 of 257

applications on a workstation (represented here by an unclassified process 446 and a secret process 448) can only read an object if the access class of the user dominates the access class of the object. A user can read down the hierarchy as indicated by transactions 454, 456 and 458 but cannot read up the hierarchy as indicated by unauthorized transaction 460.

The user can write up and on the same level as indicated by transaction 452 and 454 but cannot write down as indicated by transaction 462. Because simple security cannot prevent write-down, the process 448 can write data objects into a file whose access class is less than its own for example transaction 462. In the absence of the present invention, it might be possible for the unclassified process 446, to read secret information written in transaction 462. However, the present invention prevents transactions 462 followed by transaction 464 which results in an unauthorized downgrade. An unauthorized downgrade can be prevented, as in step 178 of FIG. 4. An analyst can only write an object if the access class of the analyst is dominated by the access class of the object. The security classification of the data object is higher than the analyst. Hence, whatever the analyst writes, the classification cannot be higher than the security classification of the data object.

Having described the preferred embodiments of the invention, it will now become apparent to one of ordinary skill in the art that other embodiments incorporating their concepts may be used. It is felt therefore that these embodiments should not be limited to disclosed embodiments but rather should be limited only by the spirit and scope of the appended claims. All publications and references cited herein are expressly incorporated herein by reference in their entirety.

What is claimed is:

BNSDOCID: <WO_____03088018A2_I_>

VMware Ex. 1002
Page 177 of 257

CLAIMS

1. A method for providing multilevel security for a data object requested by a workstation user, the method comprising:

providing a security label for the data object;

associating security rules including a security clearance level for the data object with the security label;

binding the security label to the data object;

validating the correctness of the security label;

associating the user's security clearance level with at least one user certificate;

verifying the at least one user certificate; and

determining whether the user has clearance to receive the requested data object.

2. The method of Claim 1 further comprising providing the at least one user certificate on an identification document adapted for securely storing the at least one user certificate.

3. The method of Claim 2 wherein the identification document is a smart card.

4. The method of Claim 1 further comprising:

detecting the security label in a network packet;

extracting the security rules from the security label; and

applying the security rules.

5. The method of Claim 4 wherein applying the rules associated with the security label comprises determining whether the user clearance dominates the data object clearance using the security rules.

6. The method of Claim 5 wherein detecting the security label comprises:

detecting an XML security label data type definition.

BNSDOCID: <WO_____03088018A2_I_>

VMware Ex. 1002
Page 178 of 257

7. The method of Claim 6 wherein the XML security label data type definition comprises:

a level attribute; and

a compartment attribute.

8. The method of Claim 7 wherein the XML security label data type definition comprises at least one of:

a handling instruction attribute; and

a caveat attribute.

9. The method of Claim 1 wherein the data object comprises at least one of: a record in a database;

a view in a database;

a specific word;

a specific paragraph;

a digital image;

a specific file; and

an electronic representation of digital information.

10. The method of Claim 1 wherein binding the security label to the data object comprises:

deriving a hash digest from the security label and the data object; and

digitally signing the hash digest.

11. The method of Claim 10 wherein validating the correctness of the security label for the data object comprises verifying the digital signature.

12. The method of Claim 1 further comprising associating the user certificate with at least one of:

a security category;

a clearance caveat;

an authorization; and

a permitted role.

BNSDOCID: <WO_____03088018A2_I_>

VMware Ex. 1002
Page 179 of 257

13. The method of Claim 1 wherein the security label includes at least one of:
a security clearance level;
a security category;
a clearance caveat; and
a handling instruction.

14. The method of Claim 1 wherein the security label comprises at least one statement in an extensible markup language.

15. The method of Claim 14 wherein the extensible markup language is XML.

16. The method of Claim 1 wherein the security label comprises a security clearance level.

17. The method of Claim 16 further comprising downgrading the security label security clearance level.

18. The method of Claim 17 wherein the data object is transmitted to a mission execution center.

19. The method of Claim 1 wherein the data object is located on a remote intelligence source workstation.

20. A multilevel security system for controlling access to data objects in a secure network comprising:
a plurality of security integration code processors coupled to the secure network;
a secure manager workstation coupled to one of the plurality of security integration code processors;
at least one application workstation coupled to a corresponding one the of the plurality of security integration code processors; and

BNSDOCID: <WO_____03088018A2_I_>

VMware Ex. 1002
Page 180 of 257

at least one of a multi-level protection database and a multi-level protection server coupled to a corresponding one of the plurality of security integration code processors.

21. The system of Claim 20 wherein the application workstation is adapted to receive an identification document.

22. The system of Claim 21 wherein the identification document comprises a smart card associated with at least one user certificate.

23. The system of Claim 22 further comprising an interface to a public key infrastructure (PKI) to verify the at least one user certificate.

24. The system of Claim 20 further comprising:

a first firewall coupled to a corresponding one of the plurality of security integration code processors;

a secure wide area network coupled to the first firewall;

an Intel source workstation coupled to the secure wide area network.

25. The system of Claim 20 further comprising:

a first firewall coupled to a corresponding one of the plurality of security integration code processors;

a secure wide area network coupled to the first firewall;

a mission execution center coupled to the secure wide area network.

26. The system of Claim 20 wherein at least one of the plurality of security integration code processors is implemented in a protocol stack in at least one application workstation.

27. The system of Claim 20 wherein at least one of the plurality of security integration code processors is implemented in an operating system interface to the network in at least one application workstation.

BNSDOCID: <WO_____03088018A2_I_>

VMware Ex. 1002
Page 181 of 257

28. The system of Claim 20 wherein the secure network includes an IPSEC protocol.

29. The method of Claim 20 further comprising a trusted downgrader workstation coupled to one of the plurality of security integration code processors.

BNSDOCID: <WO_____03088018A2_I_>

VMware Ex. 1002
Page 182 of 257

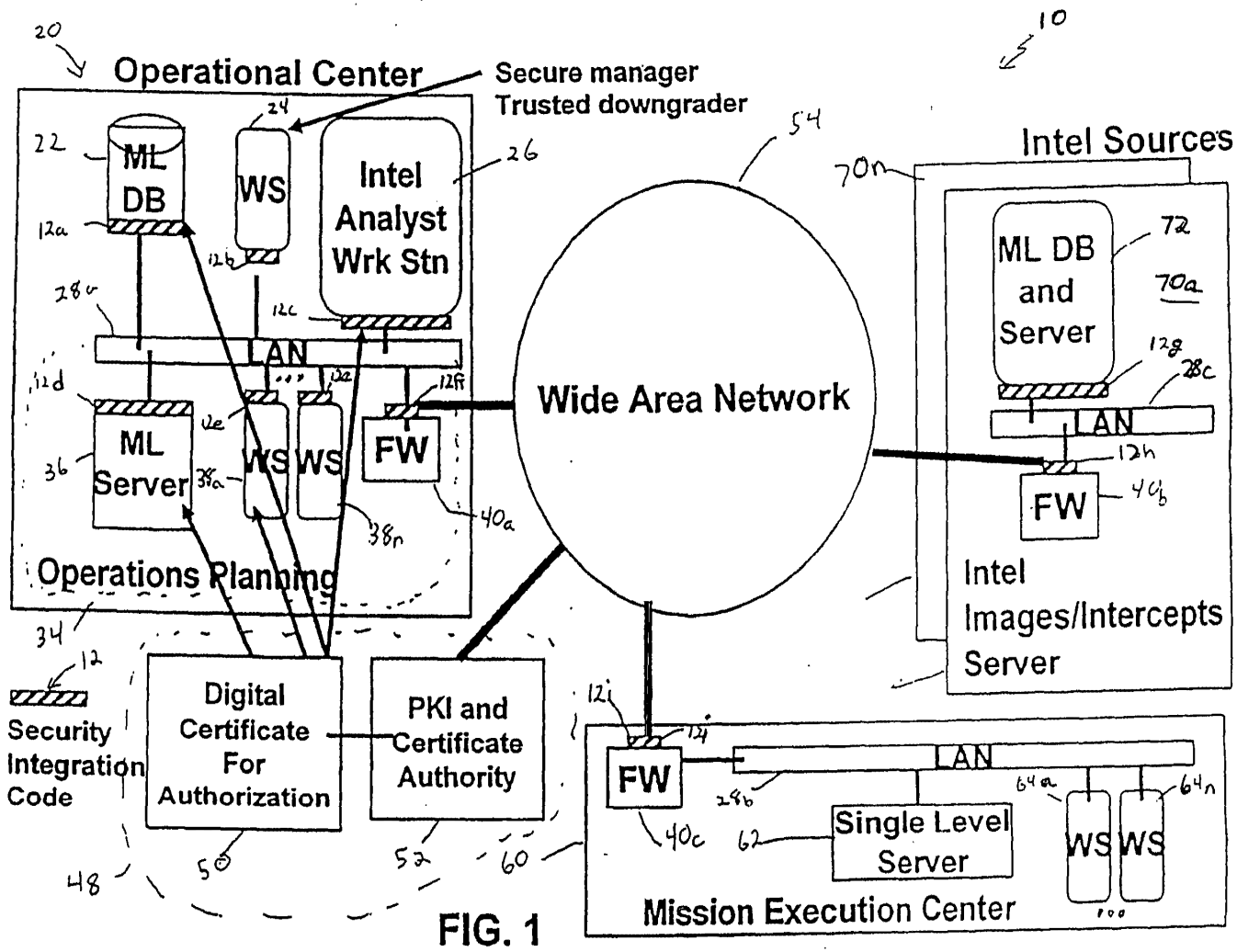
Operational Center
Secure manager
Trusted downgrader
ML DB
WS
Intel Analyst Wrk Stn
LAN
ML Server
WS
WS
FW
Operations Planning
Wide Area Network
Intel Sources
ML DB and Server
LAN
FW
Intel Images/Intercepts Server
Digital Certificate For Authorization
PKI and Certificate Authority
Security Integration Code
FW
LAN
Single Level Server
WS
WS
Mission Execution Center

FIG. 1

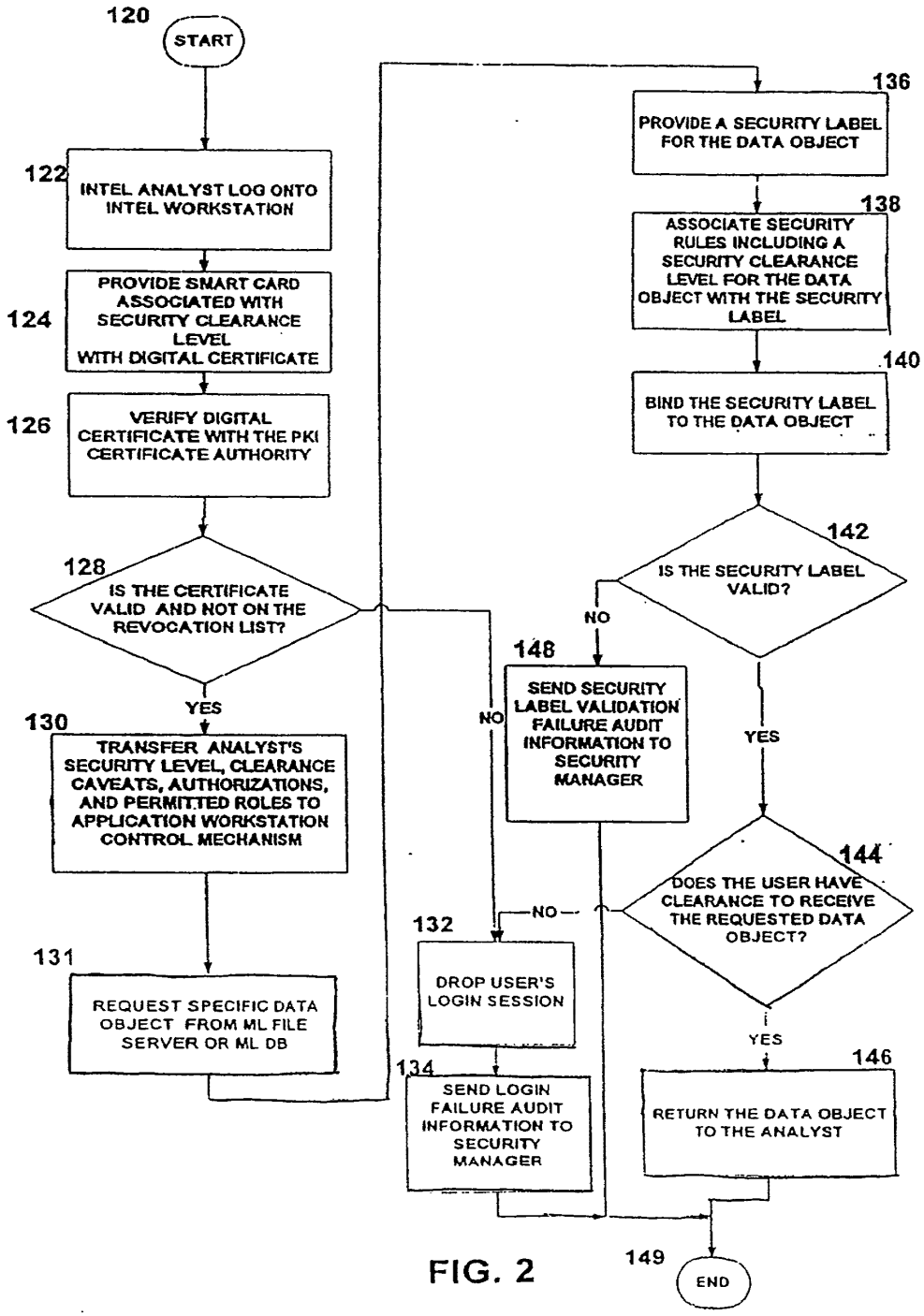
120
START
122
INTEL ANALYST LOG ONTO INTEL WORKSTATION
124
PROVIDE SMART CARD ASSOCIATED WITH SECURITY CLEARANCE LEVEL WITH DIGITAL CERTIFICATE
126
VERIFY DIGITAL CERTIFICATE WITH THE PKI CERTIFICATE AUTHORITY
128
IS THE CERTIFICATE VALID AND NOT ON THE REVOCATION LIST?
YES
NO
130
TRANSFER ANALYST'S SECURITY LEVEL, CLEARANCE CAVEATS, AUTHORIZATIONS, AND PERMITTED ROLES TO APPLICATION WORKSTATION CONTROL MECHANISM
131
REQUEST SPECIFIC DATA OBJECT FROM ML FILE SERVER OR ML DB
132
DROP USER'S LOGIN SESSION
134
SEND LOGIN FAILURE AUDIT INFORMATION TO SECURITY MANAGER
136
PROVIDE A SECURITY LABEL FOR THE DATA OBJECT
138
ASSOCIATE SECURITY RULES INCLUDING A SECURITY CLEARANCE LEVEL FOR THE DATA OBJECT WITH THE SECURITY LABEL
140
BIND THE SECURITY LABEL TO THE DATA OBJECT
142
IS THE SECURITY LABEL VALID?
NO
148
SEND SECURITY LABEL VALIDATION FAILURE AUDIT INFORMATION TO SECURITY MANAGER
YES
144
DOES THE USER HAVE CLEARANCE TO RECEIVE THE REQUESTED DATA OBJECT?
NO
YES
146
RETURN THE DATA OBJECT TO THE ANALYST
149
END

FIG. 2

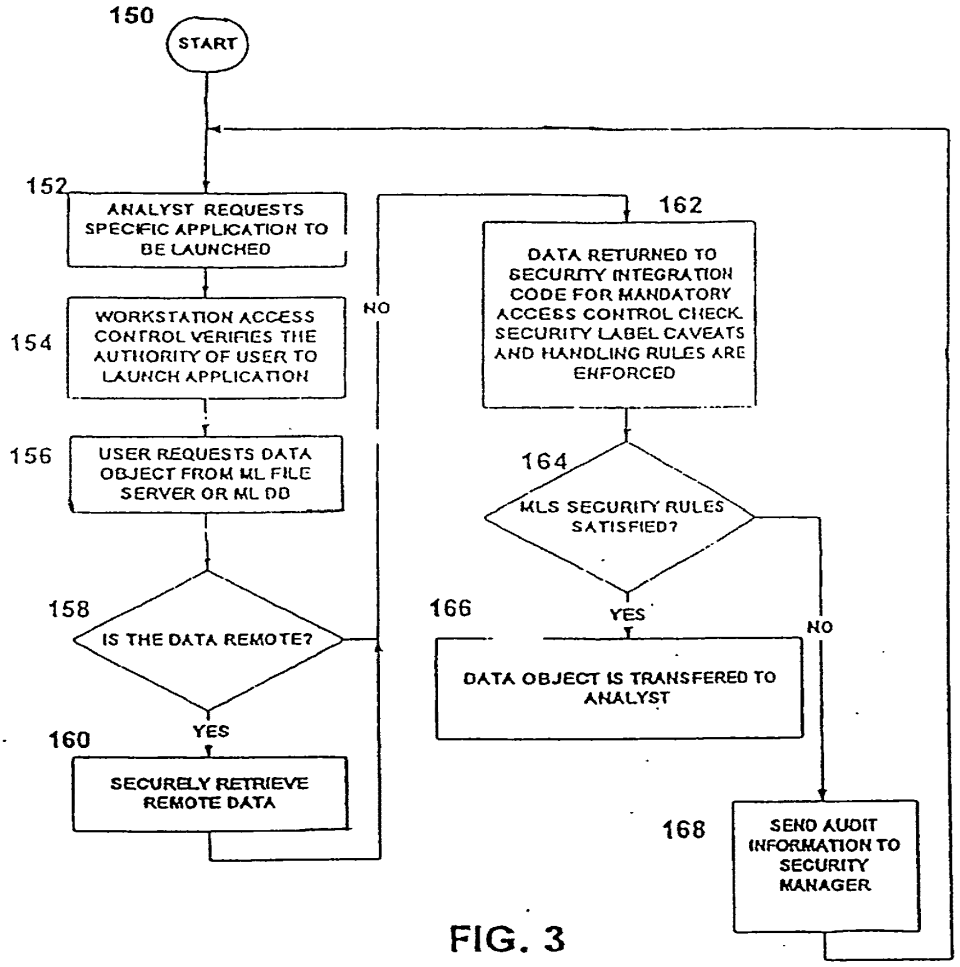

FIG. 3

VMware Ex. 1002
Page 185 of 257

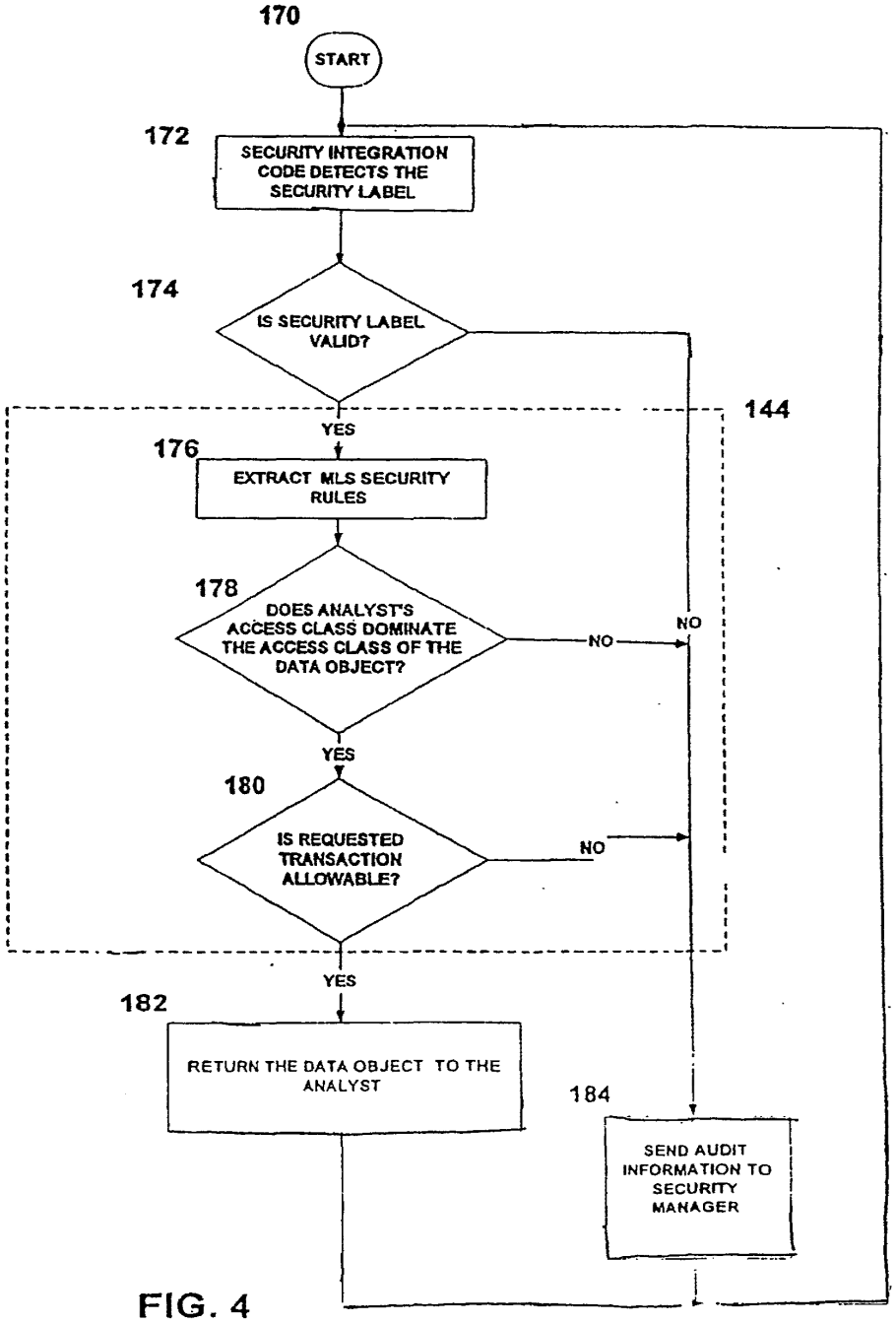
170
START
172
SECURITY INTEGRATION CODE DETECTS THE SECURITY LABEL
174
IS SECURITY LABEL VALID?
144
YES
176
EXTRACT MLS SECURITY RULES
178
DOES ANALYST'S ACCESS CLASS DOMINATE THE ACCESS CLASS OF THE DATA OBJECT?
NO
NO
YES
180
IS REQUESTED TRANSACTION ALLOWABLE?
NO
YES
182
RETURN THE DATA OBJECT TO THE ANALYST
184
SEND AUDIT INFORMATION TO SECURITY MANAGER

FIG. 4

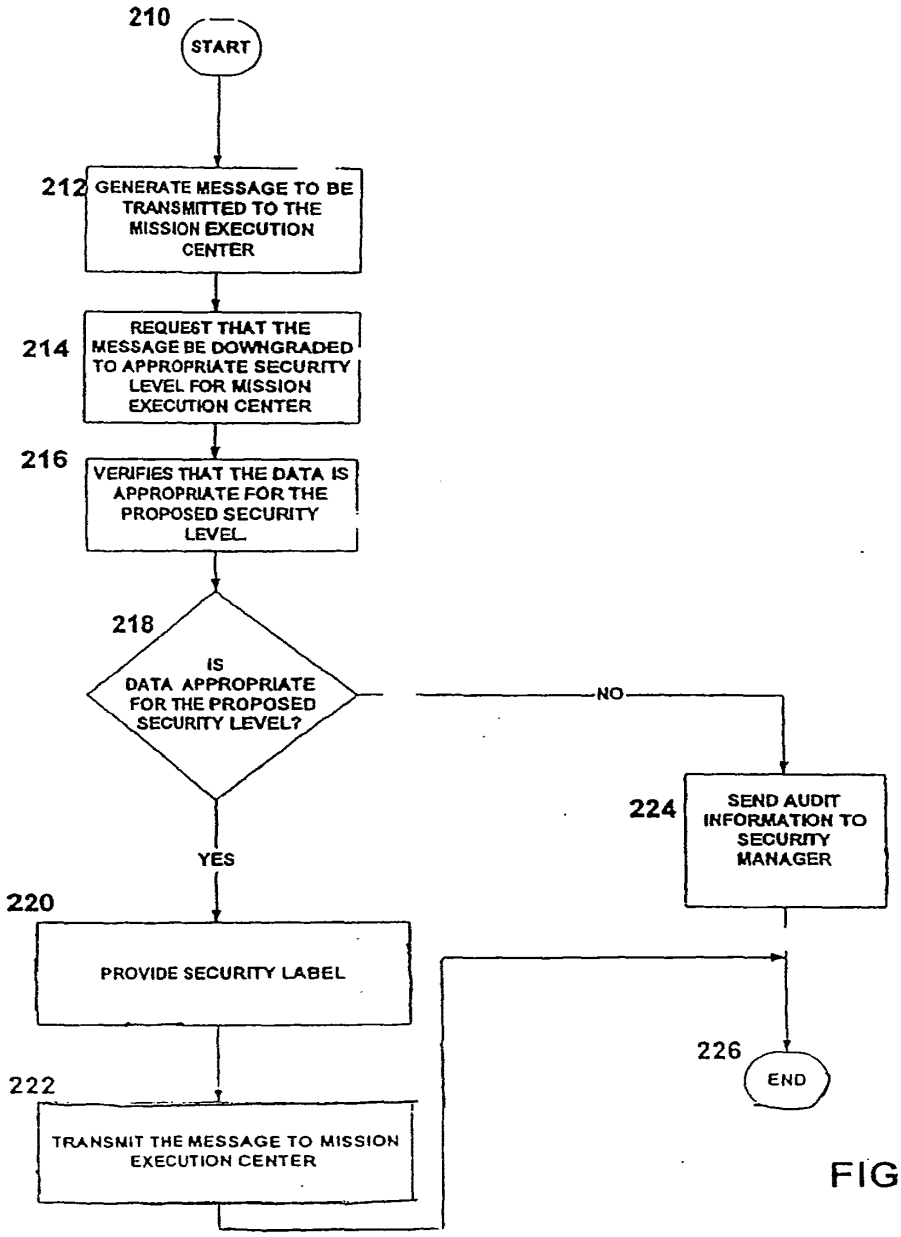

FIG. 5

VMware Ex. 1002
Page 187 of 257

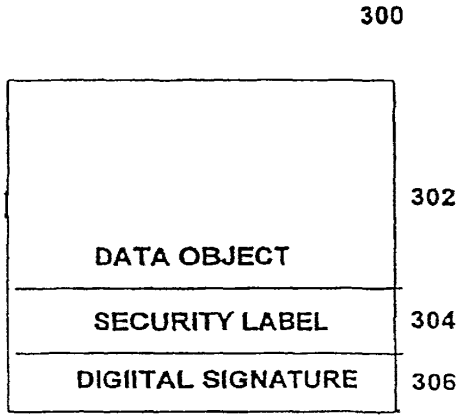
300
302
DATA OBJECT
SECURITY LABEL
304
DIGIITAL SIGNATURE
306

FIG. 6

304

```
<!ELEMENT DataObject (#PCDATA)>
<!ELEMENT SecureDocument (SecurityLabel+)>
<!ELEMENT SecurityLabel (DataObject+)>
<!ATTLIST SecurityLabel
  Level CDATA #REQUIRED
  Compartment (NOFORN | NATO | NUCLEAR | A | B | M | K) #REQUIRED
  HandlingInstruction CDATA #IMPLIED
  Caveat CDATA #IMPLIED
>
```

FIG. 7

310

```
<!DOCTYPE SecureDocument (SecurityLabel.dtd)>
<SecureDocument>
  <SecurityLabel Level="SECRET" Compartment="NOFORN">
      <DataObject>This is a SECRET NOFORN object</DataObject>
  </SecurityLabel>
  <SecurityLabel Level="TOP SECRET" Compartment="A"
  HandlingInstruction="Downgrade by the authority of the originator"
  Caveat="Releasable to UK, Japan and Canada">
    <DataObject>This is a TOP SECRET A data object</DataObject>
  </SecurityLabel>
  <SecurityLabel Level="CONFIDENTIAL" Compartment="NOFORN"
  HandlingInstruction="Not to be downgraded until Jan 1, 2019" Caveat="Not.
  Releasable to NATO">
    <DataObject>This is  CONFIDENTIAL NOFORN object</DataObject>
  </SecurityLabel>
  <SecurityLabel Level="SECRET" Compartment="NUCLEAR"
  HandlingInstruction="Not Releasable to NATO">
    <DataObject>This is a SECRET NUCLEAR data object</DataObject>
  </SecurityLabel>
</SecureDocument>
```

314 312 318a 318b

FIG. 7A

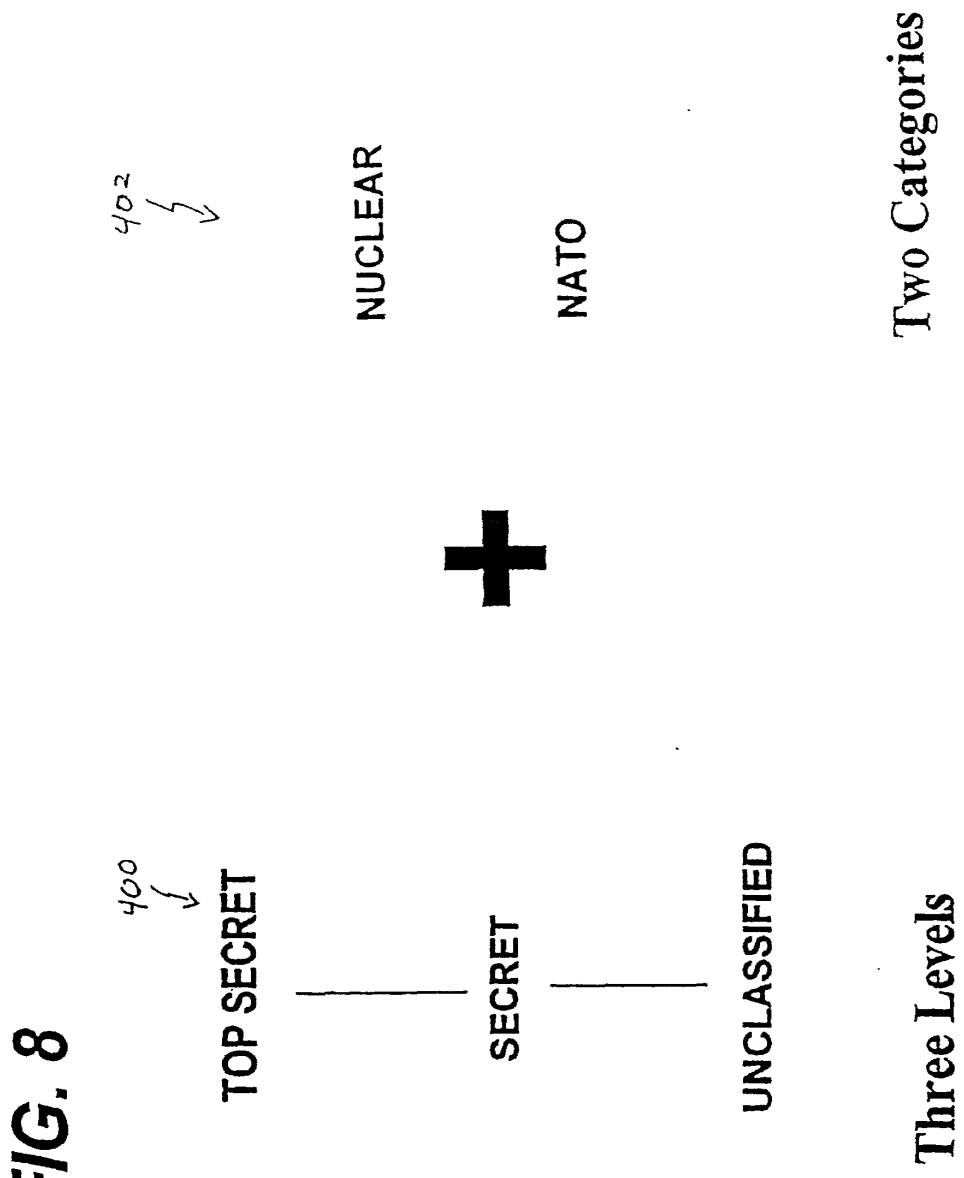

VMware Ex. 1002
Page 190 of 257

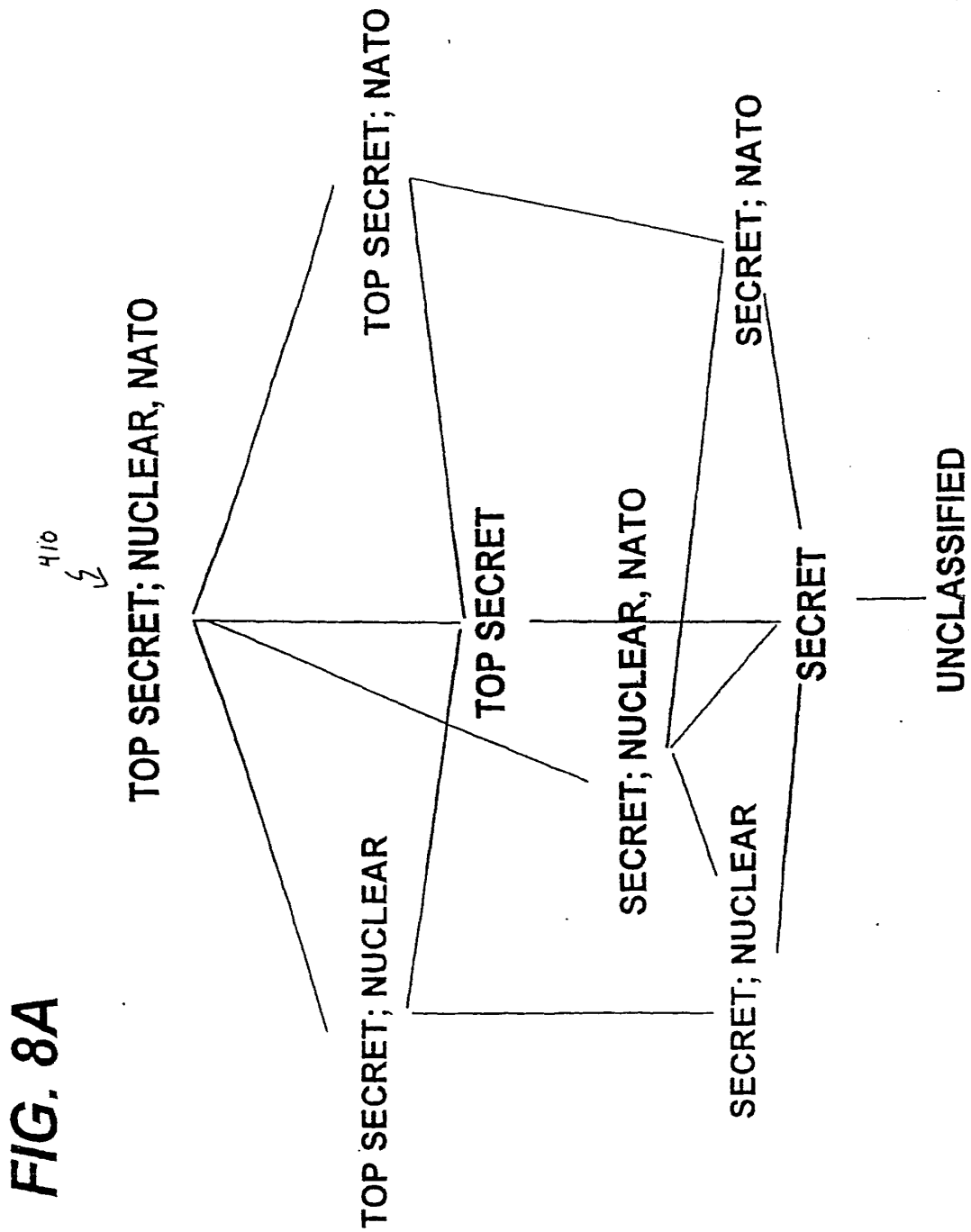

FIG. 8A

VMware Ex. 1002
Page 191 of 257

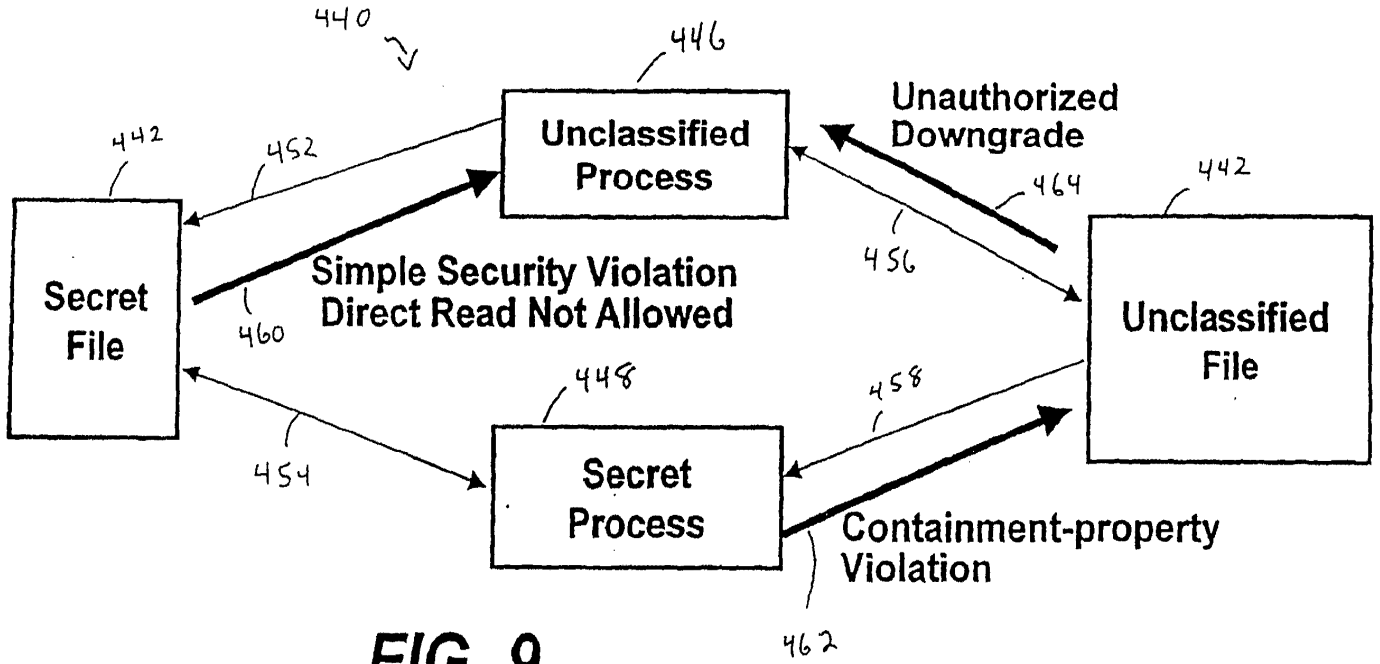

FIG. 9

BNSDOCID: <WO_____03088018A2_I_>

(12) INTERNATIONAL APPLICATION PUBLISHED UNDER THE PATENT COOPERATION TREATY (PCT)

(19) World Intellectual Property Organization
International Bureau

(43) International Publication Date
23 October 2003 (23.10.2003)

PCT

(10) International Publication Number
WO 2003/088018 A3

(51) International Patent Classification[7]: G06F 1/00

(21) International Application Number: PCT/US2003/010751

(22) International Filing Date: 9 April 2003 (09.04.2003)

(25) Filing Language: English

(26) Publication Language: English

(30) Priority Data:
60/372,489 12 April 2002 (12.04.2002) US
Not furnished 1 April 2003 (01.04.2003) US

(71) Applicant: RAYTHEON COMPANY [US/US]; 141 Spring Street, Lexington, MA 02421 (US).

(72) Inventor: KUNG, Kenneth, C.; 19029 Vickie Avenue, Cerritos, CA 90703 (US).

(74) Agents: DURKEE, Paul, D. et al.; Daly, Crowley & Mofford, LLP, 275 Turnpike Street, Suite 101, Canton, MA 02021 (US).

(81) Designated States *(national)*: AE, AG, AL, AM, AT, AU, AZ, BA, BB, BG, BR, BY, BZ, CA, CH, CN, CO, CR, CU, CZ, DE, DK, DM, DZ, EC, EE, ES, FI, GB, GD, GE, GH, GM, HR, HU, ID, IL, IN, IS, JP, KE, KG, KP, KR, KZ, LC, LK, LR, LS, LT, LU, LV, MA, MD, MG, MK, MN, MW, MX, MZ, NI, NO, NZ, OM, PH, PL, PT, RO, RU, SC, SD, SE, SG, SK, SL, TJ, TM, TN, TR, TT, TZ, UA, UG, UZ, VC, VN, YU, ZA, ZM, ZW.

(84) Designated States *(regional)*: ARIPO patent (GH, GM, KE, LS, MW, MZ, SD, SL, SZ, TZ, UG, ZM, ZW), Eurasian patent (AM, AZ, BY, KG, KZ, MD, RU, TJ, TM), European patent (AT, BE, BG, CH, CY, CZ, DE, DK, EE, ES, FI, FR, GB, GR, HU, IE, IT, LU, MC, NL, PT, RO, SE, SI, SK, TR), OAPI patent (BF, BJ, CF, CG, CI, CM, GA, GN, GQ, GW, ML, MR, NE, SN, TD, TG).

Declarations under Rule 4.17:

— *as to the identity of the inventor (Rule 4.17(i)) for the following designations AE, AG, AL, AM, AT, AU, AZ, BA, BB, BG, BR, BY, BZ, CA, CH, CN, CO, CR, CU, CZ, DE, DK, DM, DZ, EC, EE, ES, FI, GB, GD, GE, GH, GM, HR, HU, ID, IL, IN, IS, JP, KE, KG, KP, KR, KZ, LC, LK, LR, LS, LT, LU, LV, MA, MD, MG, MK, MN, MW, MX, MZ, NI, NO, NZ, OM, PH, PL, PT, RO, RU, SC, SD, SE, SG, SK, SL, TJ, TM,*

[Continued on next page]

(54) Title: SYSTEM AND TECHNIQUES TO BIND INFORMATION OBJECTS TO SECURITY LABELS

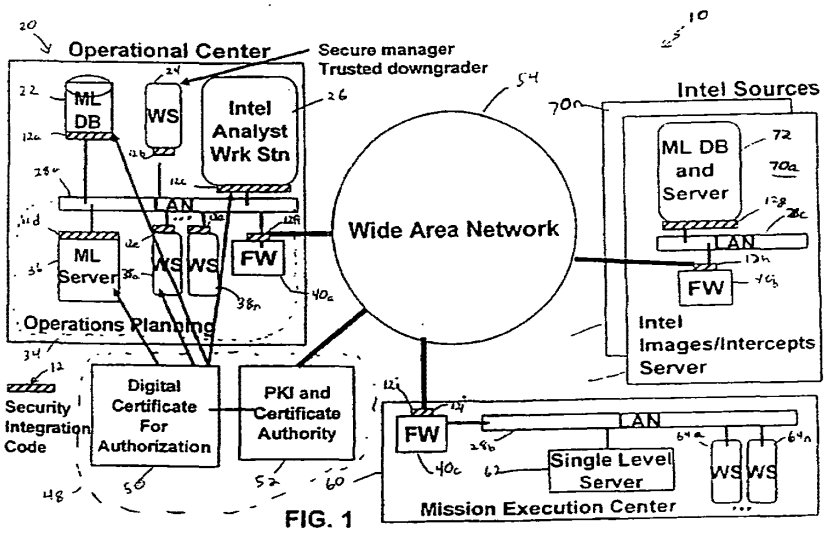

FIG. 1

(57) Abstract: A method to providing multilevel security for a data object requested by a workstation user includes providing a security label for the data object, associating security rules including a security clearance level for the data object with the security label, binding the security label to the data object, validating the correctness of the security label, associating the user's security clearance level with at least one user certificate, verifying the at least one user certificate, and determining whether the user has clearance to receive the requested data.

WO 2003/088018 A3

VMware Ex. 1002
Page 193 of 257

TN, TR, TT, TZ, UA, UG, UZ, VC, VN, YU, ZA, ZM, ZW, ARIPO patent (GH, GM, KE, LS, MW, MZ, SD, SL, SZ, TZ, UG, ZM, ZW), Eurasian patent (AM, AZ, BY, KG, KZ, MD, RU, TJ, TM), European patent (AT, BE, BG, CH, CY, CZ, DE, DK, EE, ES, FI, FR, GB, GR, HU, IE, IT, LU, MC, NL, PT, RO, SE, SI, SK, TR), OAPI patent (BF, BJ, CF, CG, CI, CM, GA, GN, GQ, GW, ML, MR, NE, SN, TD, TG)

— *as to applicant's entitlement to apply for and be granted a patent (Rule 4.17(ii)) for the following designations AE, AG, AL, AM, AT, AU, AZ, BA, BB, BG, BR, BY, BZ, CA, CH, CN, CO, CR, CU, CZ, DE, DK, DM, DZ, EC, EE, ES, FI, GB, GD, GE, GH, GM, HR, HU, ID, IL, IN, IS, JP, KE, KG, KP, KR, KZ, LC, LK, LR, LS, LT, LU, LV, MA, MD, MG, MK, MN, MW, MX, MZ, NI, NO, NZ, OM, PH, PL, PT, RO, RU, SC, SD, SE, SG, SK, SL, TJ, TM, TN, TR, TT, TZ, UA, UG, UZ, VC, VN, YU, ZA, ZM, ZW, ARIPO patent (GH, GM, KE, LS, MW, MZ, SD, SL, SZ, TZ, UG, ZM, ZW), Eurasian patent (AM, AZ, BY, KG, KZ, MD, RU, TJ, TM), European patent (AT, BE, BG, CH, CY, CZ, DE, DK, EE, ES, FI, FR, GB, GR, HU, IE, IT, LU, MC, NL, PT, RO, SE, SI, SK, TR), OAPI patent (BF, BJ, CF, CG, CI, CM, GA, GN, GQ, GW, ML, MR, NE, SN, TD, TG)*

— *as to the applicant's entitlement to claim the priority of the earlier application (Rule 4.17(iii)) for all designations*

— *as to the applicant's entitlement to claim the priority of the earlier application (Rule 4.17(iii)) for all designations*

Published:

— *with international search report*

— *before the expiration of the time limit for amending the claims and to be republished in the event of receipt of amendments*

(88) Date of publication of the international search report:
1 April 2004

For two-letter codes and other abbreviations, refer to the "Guidance Notes on Codes and Abbreviations" appearing at the beginning of each regular issue of the PCT Gazette.

INTERNATIONAL SEARCH REPORT

Inter nal Application No
PCT/US 03/10751

A. CLASSIFICATION OF SUBJECT MATTER
IPC 7 G06F1/00

According to International Patent Classification (IPC) or to both national classification and IPC

B. FIELDS SEARCHED

Minimum documentation searched (classification system followed by classification symbols)
IPC 7 G06F

Documentation searched other than minimum documentation to the extent that such documents are included in the fields searched

Electronic data base consulted during the international search (name of data base and, where practical, search terms used)

EPO-Internal

C. DOCUMENTS CONSIDERED TO BE RELEVANT

Category °	Citation of document, with indication, where appropriate, of the relevant passages	Relevant to claim No.
X	SAMESHIMA Y ET AL: "Authorization with security attributes and privilege delegation - Access control beyond the ACL" COMPUTER COMMUNICATIONS, ELSEVIER SCIENCE PUBLISHERS BV, AMSTERDAM, NL, vol. 20, no. 5, 1 July 1997 (1997-07-01), pages 376-384, XP004126692 ISSN: 0140-3664	1,2,4,5, 9,12,13, 16-19
Y	page 377, right-hand column page 378, right-hand column - page 379, left-hand column page 382, right-hand column - page 383; figure 4	3

-/--

[X] Further documents are listed in the continuation of box C.

[ ] Patent family members are listed in annex.

° Special categories of cited documents :

"A" document defining the general state of the art which is not considered to be of particular relevance

"E" earlier document but published on or after the international filing date

"L" document which may throw doubts on priority claim(s) or which is cited to establish the publication date of another citation or other special reason (as specified)

"O" document referring to an oral disclosure, use, exhibition or other means

"P" document published prior to the international filing date but later than the priority date claimed

"T" later document published after the international filing date or priority date and not in conflict with the application but cited to understand the principle or theory underlying the invention

"X" document of particular relevance; the claimed invention cannot be considered novel or cannot be considered to involve an inventive step when the document is taken alone

"Y" document of particular relevance; the claimed invention cannot be considered to involve an inventive step when the document is combined with one or more other such documents, such combination being obvious to a person skilled in the art.

"&" document member of the same patent family

Date of the actual completion of the international search	Date of mailing of the international search report
14 November 2003	21.01.2004

Name and mailing address of the ISA	Authorized officer
European Patent Office, P.B. 5818 Patentlaan 2 NL - 2280 HV Rijswijk Tel. (+31-70) 340-2040, Tx. 31 651 epo nl, Fax: (+31-70) 340-3016	San-Bento Furtado, P

Form PCT/ISA/210 (second sheet) (July 1992)

INTERNATIONAL SEARCH REPORT

Inter nal Application No
PCT/US 03/10751

C.(Continuation) DOCUMENTS CONSIDERED TO BE RELEVANT

Category °	Citation of document, with indication, where appropriate, of the relevant passages	Relevant to claim No.
Y	SIUDA K: "Security services in telecommunications networks" DIGITAL COMMUNICATIONS, 1988. MAPPING NEW APPLICATIONS ONTO NEW TECHNOLOGIES, 1988 INTERNATIONAL ZURICH SEMINAR ON ZURICH, SWITZERLAND 8-10 MARCH 1988, ZURICH, SWITZERLAND,IEEE, 8 March 1988 (1988-03-08), pages 45-52, XP010000006 ISBN: 3-908265-01-0	3
A	page 50, right-hand column page 51, right-hand column	1,2,4,5, 9,12,13, 16-19
A	RUSSELL D., GANGEMI G.: "Computer Security Basics" O'REILLY & ASSOCIATES, INC , 1991 , XP002261456 page 72 - page 77	1-5,9, 12,13, 16-19
A	YESBERG J D ET AL: "QuARC: expressive security mechanisms" NEW SECURITY PARADIGMS WORKSHOP, 1995. PROCEEDINGS LA JOLLA, CA, USA 22-25 AUG. 1995, LOS ALAMITOS, CA, USA,IEEE COMPUT. SOC, US, 22 August 1995 (1995-08-22), pages 34-40, XP010158974 ISBN: 0-8186-7318-4 page 34, right-hand column page 35 - page 36 page 39	1-5,9, 12,13, 16-19
A	GASSER M ET AL: "An architecture for practical delegation in a distributed system" PROCEEDINGS OF THE SYMPOSIUM ON RESEARCH IN SECURITY AND PRIVACY. OAKLAND, MAY 7 - 9, 1990, LOS ALAMITOS, IEEE COMP. SOC. PRESS, US, vol. SYMP. 11, 7 May 1990 (1990-05-07), pages 20-30, XP010020183 ISBN: 0-8186-2060-9 page 22 - page 23	1-5,9, 12,13, 16-19

-/--

Form PCT/ISA/210 (continuation of second sheet) (July 1992)

INTERNATIONAL SEARCH REPORT

Inter ıal Application No
PCT/US 03/10751

C.(Continuation) DOCUMENTS CONSIDERED TO BE RELEVANT

Category °	Citation of document, with indication, where appropriate, of the relevant passages	Relevant to claim No.
A	BRANSTAD M ET AL: "The role of trust in protected mail" PROCEEDINGS OF THE SYMPOSIUM ON RESEARCH IN SECURITY AND PRIVACY. OAKLAND, MAY 7 - 9, 1990, LOS ALAMITOS, IEEE COMP. SOC. PRESS, US, vol. SYMP. 11, 7 May 1990 (1990-05-07), pages 210-215, XP010020200 ISBN: 0-8186-2060-9 page 211, right-hand column page 214, right-hand column -----	1-5,9, 12,13, 16-19

Form PCT/ISA/210 (continuation of second sheet) (July 1992)

International application No.
PCT/US 03/10751

INTERNATIONAL SEARCH REPORT

Box I Observations where certain claims were found unsearchable (Continuation of Item 1 of first sheet)

This International Search Report has not been established in respect of certain claims under Article 17(2)(a) for the following reasons:

1. ☐ Claims Nos.:
because they relate to subject matter not required to be searched by this Authority, namely:

2. ☐ Claims Nos.:
because they relate to parts of the International Application that do not comply with the prescribed requirements to such an extent that no meaningful International Search can be carried out, specifically:

3. ☐ Claims Nos.:
because they are dependent claims and are not drafted in accordance with the second and third sentences of Rule 6.4(a).

Box II Observations where unity of invention is lacking (Continuation of item 2 of first sheet)

This International Searching Authority found multiple inventions in this international application, as follows:

see additional sheet

1. ☐ As all required additional search fees were timely paid by the applicant, this International Search Report covers all searchable claims.

2. ☐ As all searchable claims could be searched without effort justifying an additional fee, this Authority did not invite payment of any additional fee.

3. ☐ As only some of the required additional search fees were timely paid by the applicant, this International Search Report covers only those claims for which fees were paid, specifically claims Nos.:

4. ☒ No required additional search fees were timely paid by the applicant. Consequently, this International Search Report is restricted to the invention first mentioned in the claims; it is covered by claims Nos.:

1-5,9,12,13,16-19

Remark on Protest

☐ The additional search fees were accompanied by the applicant's protest.

☐ No protest accompanied the payment of additional search fees.

VMware Ex. 1002
Page 198 of 257

FURTHER INFORMATION CONTINUED FROM PCT/ISA/ 210

This International Searching Authority found multiple (groups of) inventions in this international application, as follows:

1. claims: 1-5,9,12,13,16-19

   Multilevel security method of controlling access to data objects by comparing security levels of objects with clearance levels of users.

   ---

2. claims: 6-8,14-15

   Multilevel security method of controlling access to data objects by comparing security levels of objects with clearance levels of users, using security labels in an extensible markup language to bind security levels to data objects.

   ---

3. claims: 10,11

   Multilevel security method of controlling access to data objects by comparing security levels of objects with clearance levels of users. Digitally signing the security label of the data object.

   ---

4. claims: 20-29

   Multilevel security system of controlling access to data objects in a secure network comprising security integration code processors, a secure manager workstation, application workstations and a multi-level protection database or server.

THIS PAGE BLANK (USPTO)

This Page is Inserted by IFW Indexing and Scanning Operations and is not part of the Official Record

BEST AVAILABLE IMAGES

Defective images within this document are accurate representations of the original documents submitted by the applicant.

Defects in the images include but are not limited to the items checked:

- ☐ BLACK BORDERS
- ☐ IMAGE CUT OFF AT TOP, BOTTOM OR SIDES
- ☐ FADED TEXT OR DRAWING
- ☑ BLURRED OR ILLEGIBLE TEXT OR DRAWING
- ☐ SKEWED/SLANTED IMAGES
- ☐ COLOR OR BLACK AND WHITE PHOTOGRAPHS
- ☐ GRAY SCALE DOCUMENTS
- ☐ LINES OR MARKS ON ORIGINAL DOCUMENT
- ☐ REFERENCE(S) OR EXHIBIT(S) SUBMITTED ARE POOR QUALITY
- ☐ OTHER: _____

IMAGES ARE BEST AVAILABLE COPY.
As rescanning these documents will not correct the image problems checked, please do not report these problems to the IFW Image Problem Mailbox.

THIS PAGE BLANK (USPTO)

OIPE JC181
JUN 2 4 2004
PATENT & TRADEMARK OFFICE

PATENT

IN THE UNITED STATES PATENT AND TRADEMARK OFFICE

Application No.	:	10/798,074	Confirmation No.	5321
Applicant	:	KOVARIK, JR.		
Filed	:	March 11, 2004		
TC/A.U.	:			
Examiner	:			
Docket No.	:	7162-0110		
Customer No.	:	39207		

PRELIMINARY AMENDMENT

Mail Stop Missing Parts
Commissioner for Patents
P.O. Box 1450
Alexandria, VA 22313-1450

Sir:

Please enter the following amendment and remarks into the above-identified application prior to Examination thereof.

Amendment to the specification begin on page 2 of this paper.

Remarks begin on page 3 of this paper.

Certificate Under 37 C.F.R. 1.8(a)

I hereby certify that this correspondence is being deposited with the United States Postal Service as First Class Mail in an envelope addressed to: Mail Stop Missing Parts, Commissioner for Patents, Alexandria, VA 22313-1450 on 6/21/04

Robert J. Sacco, Reg. No. 35,667

Amendment to the specification:

Please replace paragraph [0019] with the following amended paragraph:

[0019] Figs. 9A-9H show a series of tables that are useful for understanding how the inventive process can operate in a second example.

OIPE JC184
JUN 2 4 2004
PATENT & TRADEMARK OFFICE

REMARKS

Applicants submit that no new matter is entered by this Preliminary Amendment and respectfully requests entry of the Amendment. No fee is believed due. However, should there be any fees relating to this Amendment, please charge such fees to Deposit Account No. 50-2884.

Respectfully submitted,

Date: 6/21/04

Robert J. Sacco
Registration No. 35,667
SACCO & ASSOCIATES, P.A.
Post Office Box 30999
Palm Beach Gardens, FL 33420-0999
561/626-2222

OIPE JC183
JUN 2 4 2004
PATENT & TRADEMARK OFFICE

Partially Ordered Set with Transitive Closure Table

POSET	A	B	C	D	dir	exec	del	a	b	c	d	e
A	1	0	0	0	0	0	0	1	1	0	0	0
B	0	1	0	0	0	0	0	1	1	1	0	0
C	0	0	1	0	0	0	0	0	0	1	0	0
D	0	0	0	1	0	0	0	0	1	0	0	1
dir	0	0	0	0	1	0	0	0	0	0	1	1
exec	0	0	0	0	0	1	0	0	0	0	1	1
del	0	0	0	0	0	0	1	0	0	0	0	1
a	0	0	0	0	0	0	0	1	1	0	0	0
b	0	0	0	0	0	0	0	0	1	0	0	0
c	0	0	0	0	0	0	0	0	0	1	0	0
d	0	0	0	0	0	0	0	0	0	0	1	1
e	0	0	0	0	0	0	0	0	0	0	0	1

202

Fig. 2A

	A	B	C	D	dir	exec	del
a	1	1	0	0	0	0	0
b	1	1	0	1	0	0	0
c	0	1	1	0	0	0	0
d	0	0	0	0	1	1	0
e	0	0	0	1	1	1	1

Fig. 2B

Temporal Order Table (TOT)

TOT	A	B	C	D	dir	exec	del
a							
b							
c							
d					1	2	
e				1	2.1	2.2	3

Fig. 3

Process/User Access Table (PUAT)

Usr	A	B	C	D	dir	exec	del
1(1)	0	1	0	2	0	2	1
2(1)	0	1	0	2	0	2	1
3(2)	0	1	0	2	0	2	1
4(1)	0	1	0	2	0	2	1
5(3)	0	1	0	2	0	2	1

Fig. 4A

Temporal Access Table (TAT)

Usr	A	B	C	D	dir	exec	del
1(1)					102	112	
2(1)							
3(2)					111	103	
4(1)							
5(3)							

Fig. 4B

Combinatorial Classification Table (CCT)

CCT	A	B	C	D	dir	exec	del
a	2	2	0	0	0	0	0
b	3	3	0	3	0	0	0
c	0	3	3	0	0	0	0
d	0	0	0	0	3	3	0
e	0	0	0	5	5	5	5

Fig. 5

Fig. 8A

Usr	A	B	C	D	dir	exec	del
1(1)	0	1	0	2	0	2	1
2(1)	0	1	0	2	0	2	1
3(2)	0	1	0	2	0	2	1
4(1)	0	1	0	2	0	2	1
5(3)	0	1	0	2	0	2	1

Fig. 8B

TOT	A	B	C	D	dir	exec	del
a							
b							
c							
d					1	2	
e				1	2.1	2.2	3

Fig. 8C

CCT	A	B	C	D	dir	exec	del
a	2	2	0	0	0	0	0
b	3	3	0	3	0	0	0
c	0	3	3	0	0	0	0
d	0	0	0	0	3	3	0
e	0	0	0	5	5	5	5

Fig. 8D

Usr	A	B	C	D	dir	exec	del
1(1)	0	1	0	2	0	2	1
2(1)	0/1	2	0	2	0	2	1
3(2)	0	1	0	2	0	2	1
4(1)	0	1	0	2	0	2	1
5(3)	0	1	0	2	0	2	1

Fig. 8E

TOT	A	B	C	D	dir	exec	del
a							
b							
c							
d					1	2	
e				1	2.1	2.2	3

Fig. 9A

Usr	A	B	C	D	dir	exec	del
1(1)	0	1	0	2	0	2	1
2(1)	0	1	0	2	0	2	1
3(2)	0	1	0	2	0	2	1
4(1)	0	1	0	2	0	2	1
5(3)	0	1	0	2	0	2	1

Fig. 9B

TOT	A	B	C	D	dir	exec	del
a							
b							
c							
d					1	2	
e				1	2.1	2.2	3

Fig. 9C

CCT	A	B	C	D	dir	exec	del
a	2	2	0	0	0	0	0
b	3	3	0	3	0	0	0
c	0	3	3	0	0	0	0
d	0	0	0	0	3	3	0
e	0	0	0	5	5	5	5

Fig. 9D

Usr	A	B	C	D	dir	exec	del
1(1)	0	1	0	2	0	2	1
2(1)	0	1	0	2	0	2	1
3(2)	0/1	2	0	2	0	2	1
4(1)	0	1	0	2	0	2	1
5(3)	0	1	0	2	0	2	1

Fig. 9E

TOT	A	B	C	D	dir	exec	del
a							
b							
c							
d					1	2	
e				1	2.1	2.2	3

Fig. 9F

CCT	A	B	C	D	dir	exec	del
a	2	2	0	0	0	0	0
b	3	3	0	3	0	0	0
c	0	3	3	0	0	0	0
d	0	0	0	0	3	3	0
e	0	0	0	5	5	5	5

Fig. 9G

Usr	A	B	C	D	dir	exec	del
1(1)	0	1	0	2	0	2	1
2(1)	0	1	0	2	0	2	1
3(2)	0/1	3	0	2/2	0	2	1
4(1)	0	1	0	2	0	2	1
5(3)	0	1	0	2	0	2	1

Fig. 9H

TOT	A	B	C	D	dir	exec	del
a							
b							
c							
d					1	2	
e				1	2.1	2.2	3

PATENT APPLICATION FEE DETERMINATION RECORD
Effective October 1, 2003

Application or Docket Number: 10/798 074

CLAIMS AS FILED - PART I

	(Column 1)	(Column 2)
TOTAL CLAIMS	14	
FOR	NUMBER FILED	NUMBER EXTRA
TOTAL CHARGEABLE CLAIMS	14 minus 20=	*
INDEPENDENT CLAIMS	3 minus 3 =	*
MULTIPLE DEPENDENT CLAIM PRESENT		☐

* If the difference in column 1 is less than zero, enter "0" in column 2

SMALL ENTITY TYPE ☐		OR	OTHER THAN SMALL ENTITY	
RATE	FEE		RATE	FEE
BASIC FEE	385.00	OR	BASIC FEE	770.00
X$ 9=		OR	X$18=	
X43=		OR	X86=	
+145=		OR	+290=	
TOTAL		OR	TOTAL	770

CLAIMS AS AMENDED - PART II

6-24-04

AMENDMENT A		(Column 1) CLAIMS REMAINING AFTER AMENDMENT		(Column 2) HIGHEST NUMBER PREVIOUSLY PAID FOR	(Column 3) PRESENT EXTRA
	Total	* 19	Minus	** 20	=
	Independent	* 3	Minus	*** 3	=
	FIRST PRESENTATION OF MULTIPLE DEPENDENT CLAIM				☐

1-10-11

SMALL ENTITY		OR	OTHER THAN SMALL ENTITY	
RATE	ADDI-TIONAL FEE		RATE	ADDI-TIONAL FEE
X$ 9=		OR	X$18=	
X43=		OR	X86=	
+145=		OR	+290=	
TOTAL ADDIT. FEE		OR	TOTAL ADDIT. FEE	

AMENDMENT B		(Column 1) CLAIMS REMAINING AFTER AMENDMENT		(Column 2) HIGHEST NUMBER PREVIOUSLY PAID FOR	(Column 3) PRESENT EXTRA
	Total	*	Minus	**	=
	Independent	*	Minus	***	=
	FIRST PRESENTATION OF MULTIPLE DEPENDENT CLAIM				☐

RATE	ADDI-TIONAL FEE		RATE	ADDI-TIONAL FEE
X$ 9=		OR	X$18=	
X43=		OR	X86=	
+145=		OR	+290=	
TOTAL ADDIT. FEE		OR	TOTAL ADDIT. FEE	

AMENDMENT C		(Column 1) CLAIMS REMAINING AFTER AMENDMENT		(Column 2) HIGHEST NUMBER PREVIOUSLY PAID FOR	(Column 3) PRESENT EXTRA
	Total	*	Minus	**	=
	Independent	*	Minus	***	=
	FIRST PRESENTATION OF MULTIPLE DEPENDENT CLAIM				☐

RATE	ADDI-TIONAL FEE		RATE	ADDI-TIONAL FEE
X$ 9=		OR	X$18=	
X43=		OR	X86=	
+145=		OR	+290=	
TOTAL ADDIT. FEE		OR	TOTAL ADDIT. FEE	

* If the entry in column 1 is less than the entry in column 2, write "0" in column 3.
** If the "Highest Number Previously Paid For" IN THIS SPACE is less than 20, enter "20."
*** If the "Highest Number Previously Paid For" IN THIS SPACE is less than 3, enter "3."
The "Highest Number Previously Paid For" (Total or Independent) is the highest number found in the appropriate box in column 1.

UNITED STATES PATENT AND TRADEMARK OFFICE

UNITED STATES DEPARTMENT OF COMMERCE
United States Patent and Trademark Office
Address: COMMISSIONER FOR PATENTS
P.O. Box 1450
Alexandria, Virginia 22313-1450
www.uspto.gov

APPLICATION NUMBER	FILING OR 371 (c) DATE	FIRST NAMED APPLICANT	ATTORNEY DOCKET NUMBER
10/798,074	03/11/2004	Vincent Joseph Kovarik JR.	7162-0110

CONFIRMATION NO. 5321

39207
SACCO & ASSOCIATES, PA
P.O. BOX 30999
PALM BEACH GARDENS, FL 33420-0999

FORMALITIES LETTER

OC000000012802421

Date Mailed: 05/27/2004

NOTICE TO FILE CORRECTED APPLICATION PAPERS

Filing Date Granted

An application number and filing date have been accorded to this application. The application is informal since it does not comply with the regulations for the reason(s) indicated below. Applicant is given TWO MONTHS from the date of this Notice within which to correct the informalities indicated below. Extensions of time may be obtained by filing a petition accompanied by the extension fee under the provisions of 37 CFR 1.136(a).

The required item(s) identified below must be timely submitted to avoid abandonment:

- Replacement drawings in compliance with 37 CFR 1.84 and 37 CFR 1.121 are required. The drawings submitted are not acceptable because:
    - The drawings have a line quality that is too light to be reproduced (weight of all lines and letters must be heavy enough to permit adequate reproduction) or text that is illegible (reference characters, sheet numbers, and view numbers must be plain and legible) see 37 CFR 1.84(l) and (p)(1)); See Figure(s) 8a-8e; 9a-9j.

Replies should be mailed to: Mail Stop Missing Parts
Commissioner for Patents
P.O. Box 1450
Alexandria VA 22313-1450

A copy of this notice MUST be returned with the reply.

Customer Service Center
Initial Patent Examination Division (703) 308-1202

PART 3 - OFFICE COPY

PTO/SB/05 (08-03)
Approved for use through 07/31/2006. OMB 0651-0032
U.S. Patent and Trademark Office. U.S. DEPARTMENT OF COMMERCE
Under the Paperwork Reduction Act of 1995, no persons are required to respond to a collection of information unless it displays a valid OMB control number.

UTILITY PATENT APPLICATION TRANSMITTAL

(Only for new nonprovisional applications under 37 CFR 1.53(b))

Attorney Docket No.	7162-0110
First Inventor	KOVARIK, JR.
Title	Enforcing Computer Security Utilizing an Adaptive Lattice Mechanism
Express Mail Label No.	EV 417207036 US

1749 U.S. PTO
10/798074
031104

APPLICATION ELEMENTS

See MPEP chapter 600 concerning utility patent application contents.

ADDRESS TO: **Mail Stop Patent Application**
Commissioner for Patents
P.O. Box 1450
Alexandria VA 22313-1450

1. [✓] Fee Transmittal Form (e.g., PTO/SB/17)
   (Submit an original and a duplicate for fee processing)
2. [ ] Applicant claims small entity status. See 37 CFR 1.27.
3. [✓] Specification [*Total Pages* 23]
   (preferred arrangement set forth below)
   - Descriptive title of the invention
   - Cross Reference to Related Applications
   - Statement Regarding Fed sponsored R & D
   - Reference to sequence listing, a table, or a computer program listing appendix
   - Background of the Invention
   - Brief Summary of the Invention
   - Brief Description of the Drawings *(if filed)*
   - Detailed Description
   - Claim(s)
   - Abstract of the Disclosure
4. [✓] Drawing(s) (*35 U.S.C. 113*) [*Total Sheets* 10]
5. Oath or Declaration [*Total Sheets* 2]
   a. [✓] Newly executed (original or copy)
   b. [ ] Copy from a prior application (37 CFR 1.63(d))
   (for continuation/divisional with Box 18 completed)
      i. [ ] DELETION OF INVENTOR(S)
      Signed statement attached deleting inventor(s) name in the prior application, see 37 CFR 1.63(d)(2) and 1.33(b).
6. [✓] Application Data Sheet. See 37 CFR 1.76
7. [ ] CD-ROM or CD-R in duplicate, large table or Computer Program *(Appendix)*
8. Nucleotide and/or Amino Acid Sequence Submission *(if applicable, all necessary)*
   a. [ ] Computer Readable Form (CRF)
   b. Specification Sequence Listing on:
      i. [ ] CD-ROM or CD-R (2 copies); or
      ii. [ ] Paper
   c. [ ] Statements verifying identity of above copies

ACCOMPANYING APPLICATION PARTS

9. [✓] Assignment Papers (cover sheet & document(s))
10. [ ] 37 CFR 3.73(b) Statement *(when there is an assignee)* [ ] Power of Attorney
11. [ ] English Translation Document *(if applicable)*
12. [✓] Information Disclosure Statement (IDS)/PTO-1449 [ ] Copies of IDS Citations
13. [ ] Preliminary Amendment
14. [✓] Return Receipt Postcard (MPEP 503) *(Should be specifically itemized)*
15. [ ] Certified Copy of Priority Document(s) *(if foreign priority is claimed)*
16. [ ] Nonpublication Request under 35 U.S.C. 122 (b)(2)(B)(i). Applicant must attach form PTO/SB/35 or its equivalent.
17. [✓] Other: Fee: $810

18. If a CONTINUING APPLICATION, *check appropriate box, and supply the requisite information below and in the first sentence of the specification following the title, or in an Application Data Sheet under 37 CFR 1.76:*

[ ] Continuation [ ] Divisional [ ] Continuation-in-part (CIP) of prior application No.: .....

Prior application information: *Examiner* _____ *Art Unit:* _____

For CONTINUATION OF DIVISIONAL APPS only; The entire disclosure of the prior application, from which an oath or declaration is supplied under Box 5b, is considered a part of the disclosure of the accompanying continuation or divisional application and is hereby incorporated by reference. The incorporation can only be relied upon when a portion has been inadvertently omitted from the submitted application parts.

19. CORRESPONDENCE ADDRESS

[✓] Customer Number: 39207 *OR* [ ] Correspondence address below

Name					
Address					
City		*State*		*Zip Code*	
Country		*Telephone*		*Fax*	

Name (Print/Type)	Robert J. Sacco	*Registration No. (Attorney/Agent)*	35,667
Signature		*Date*	3/11/04

This collection of information is required by 37 CFR 1.53(b). The information is required to obtain or retain a benefit by the public which is to file (and by the USPTO to process) an application. Confidentiality is governed by 35 U.S.C. 122 and 37 CFR 1.14. This collection is estimated to take 12 minutes to complete, including gathering, preparing, and submitting the completed application form to the USPTO. Time will vary depending upon the individual case. Any comments on the amount of time you require to complete this form and/or suggestions for reducing this burden, should be sent to the Chief Information Officer, U.S. Patent and Trademark Office, U.S. Department of Commerce, P.O. Box 1450, Alexandria, VA 22313-1450. DO NOT SEND FEES OR COMPLETED FORMS TO THIS ADDRESS. **SEND TO: Mail Stop Patent Application, Commissioner for Patents, P.O. Box 1450, Alexandria, VA 22313-1450.**
If you need assistance in completing the form, call 1-800-PTO-9199 and select option 2.

18351 U.S. PTO
031104

PTO/SB/17 (10-03)
Approved for use through 07/31/2006. OMB 0651-0032
U.S. Patent and Trademark Office; U.S. DEPARTMENT OF COMMERCE
Under the Paperwork Reduction Act of 1995, no persons are required to respond to a collection of information unless it displays a valid OMB control number.

FEE TRANSMITTAL for FY 2004

Effective 10/01/2003. Patent fees are subject to annual revision.

☐ Applicant claims small entity status. See 37 CFR 1.27

TOTAL AMOUNT OF PAYMENT ($) 810

Complete if Known	
Application Number	
Filing Date	
First Named Inventor	KOVARIK, JR.
Examiner Name	
Art Unit	
Attorney Docket No.	7162-0110

METHOD OF PAYMENT *(check all that apply)*

☑ Check ☐ Credit card ☐ Money Order ☐ Other ☐ None

☑ Deposit Account:

Deposit Account Number: 50-2884

Deposit Account Name: Sacco & Associates, P.A.

The Director is authorized to: *(check all that apply)*

☐ Charge fee(s) indicated below ☑ Credit any overpayments

☑ Charge any additional fee(s) or any underpayment of fee(s)

☐ Charge fee(s) indicated below, **except for the filing fee** to the above-identified deposit account.

FEE CALCULATION

1. BASIC FILING FEE

Large Entity Fee Code	Large Entity Fee ($)	Small Entity Fee Code	Small Entity Fee ($)	Fee Description	Fee Paid
1001	770	2001	385	Utility filing fee	770
1002	340	2002	170	Design filing fee	
1003	530	2003	265	Plant filing fee	
1004	770	2004	385	Reissue filing fee	
1005	160	2005	80	Provisional filing fee	

SUBTOTAL (1) ($) 770

2. EXTRA CLAIM FEES FOR UTILITY AND REISSUE

	Extra Claims		Fee from below		Fee Paid
Total Claims		-20** =		X	=
Independent Claims		- 3** =		X	=
Multiple Dependent					=

Large Entity Fee Code	Large Entity Fee ($)	Small Entity Fee Code	Small Entity Fee ($)	Fee Description
1202	18	2202	9	Claims in excess of 20
1201	86	2201	43	Independent claims in excess of 3
1203	290	2203	145	Multiple dependent claim, if not paid
1204	86	2204	43	** Reissue independent claims over original patent
1205	18	2205	9	** Reissue claims in excess of 20 and over original patent

SUBTOTAL (2) ($)

***or number previously paid, if greater; For Reissues, see above*

FEE CALCULATION (continued)

3. ADDITIONAL FEES

Large Entity Fee Code	Large Entity Fee ($)	Small Entity Fee Code	Small Entity Fee ($)	Fee Description	Fee Paid
1051	130	2051	65	Surcharge - late filing fee or oath	
1052	50	2052	25	Surcharge - late provisional filing fee or cover sheet	
1053	130	1053	130	Non-English specification	
1812	2,520	1812	2,520	For filing a request for *ex parte* reexamination	
1804	920*	1804	920*	Requesting publication of SIR prior to Examiner action	
1805	1,840*	1805	1,840*	Requesting publication of SIR after Examiner action	
1251	110	2251	55	Extension for reply within first month	
1252	420	2252	210	Extension for reply within second month	
1253	950	2253	475	Extension for reply within third month	
1254	1,480	2254	740	Extension for reply within fourth month	
1255	2,010	2255	1,005	Extension for reply within fifth month	
1401	330	2401	165	Notice of Appeal	
1402	330	2402	165	Filing a brief in support of an appeal	
1403	290	2403	145	Request for oral hearing	
1451	1,510	1451	1,510	Petition to institute a public use proceeding	
1452	110	2452	55	Petition to revive - unavoidable	
1453	1,330	2453	665	Petition to revive - unintentional	
1501	1,330	2501	665	Utility issue fee (or reissue)	
1502	480	2502	240	Design issue fee	
1503	640	2503	320	Plant issue fee	
1460	130	1460	130	Petitions to the Commissioner	
1807	50	1807	50	Processing fee under 37 CFR 1.17(q)	
1806	180	1806	180	Submission of Information Disclosure Stmt	
8021	40	8021	40	Recording each patent assignment per property (times number of properties)	40
1809	770	2809	385	Filing a submission after final rejection (37 CFR 1.129(a))	
1810	770	2810	385	For each additional invention to be examined (37 CFR 1.129(b))	
1801	770	2801	385	Request for Continued Examination (RCE)	
1802	900	1802	900	Request for expedited examination of a design application	

Other fee (specify) _____

*Reduced by Basic Filing Fee Paid

SUBTOTAL (3) ($) 40

SUBMITTED BY				(Complete *(if applicable)*)	
Name (Print/Type)	ROBERT J. SACCO	*Registration No. (Attorney/Agent)*	35,667	*Telephone*	562-626-2222
Signature				*Date*	3/11/04

WARNING: Information on this form may become public. Credit card information should not be included on this form. Provide credit card information and authorization on PTO-2038.

This collection of information is required by 37 CFR 1.17 and 1.27. The information is required to obtain or retain a benefit by the public which is to file (and by the USPTO to process) an application. Confidentiality is governed by 35 U.S.C. 122 and 37 CFR 1.14. This collection is estimated to take 12 minutes to complete, including gathering, preparing, and submitting the completed application form to the USPTO. Time will vary depending upon the individual case. Any comments on the amount of time you require to complete this form and/or suggestions for reducing this burden, should be sent to the Chief Information Officer, U.S. Patent and Trademark Office, U.S. Department of Commerce, P.O. Box 1450, Alexandria, VA 22313-1450. DO NOT SEND FEES OR COMPLETED FORMS TO THIS ADDRESS. **SEND TO: Commissioner for Patents, P.O. Box 1450, Alexandria, VA 22313-1450.**

If you need assistance in completing the form, call 1-800-PTO-9199 and select option 2.

Express Mail Label: EV 417207036 US

Express Mail Label: EV417207036US

ENFORCING COMPUTER SECURITY UTILIZING AN ADAPTIVE LATTICE MECHANISM

BACKGROUND OF THE INVENTION

Statement of the Technical Field

[0001] The inventive arrangements relate generally to computer and information security and more particularly to security measures that enforce security based on logical implementation methods.

Description of the Related Art

[0002] Control of access to information and computer system resources is a continuing problem for system, database, and network administrators across the government, military, and private industry. Providing system security in such multi-user environments requires a balance between permitting access to resources necessary to perform the business functions for the enterprise and limiting access. Current security methods fall within two basic categories. These include physical and logical implementation methods.

[0003] Methods for implementing logical security safeguards typically provide access based on a user/group/role identifier and an access control list for the file, database, or system function to be accessed. However, there are a number of serious limitations to such an approach, primarily because control over information access is limited to a simple relational comparison. Significantly, such systems do not enforce security based on patterns of behavior, aggregation of data, or information clustering. Further, conventional systems make use of simple point tests which do not support the ability to look at temporal patterns of access.

[0004] For example, U.S. Patent No. 6,453,418 to Ooki et al. concerns a method for accessing information. The invention addresses some aspects of accessing portions of

information based on user access authority. However, the invention makes no use of access patterns or temporal activities to control access.

[0005] U.S. Patent No. 6,446,077 to Straube et al. concerns an inherited information propagator for objects. The invention utilizes an inheritance graph to propagate changes in security descriptors to affected objects. The invention focuses on the propagation of security tagging but does not address the process of enforcing the security policy and does not mention aggregation or temporal patterns.

[0006] U.S. Patent No. 6,334,121 to Primeaux et al. concerns a usage pattern based user authenticator. The system utilizes a neural network and a set of rules to track usage patterns and flag suspicious activities. This patent focuses on flagging suspicious activity but does not address enforcement of a security policy based on such flagging.

SUMMARY OF THE INVENTION

[0007] The invention concerns a method for ensuring secure access to a computer system. The method can involve several steps. The method can begin with the step of receiving in the computer system a request from an entity. The entity can be a user or a process and can have a predetermined access authorization level for access to a first base node representing an information type or a computer system function. The computer system determine if the access request completes a prohibited temporal access pattern for the entity. If so, the request is rejected. Otherwise, the system can compare a minimum access level established for the first base node to the predetermined access authorization level assigned to the entity. Thereafter, the system can grant the access request only if the minimum access level for the first base node does not exceed to the predetermined access authorization level. The method can also include the step of denying the request if the minimum access level for the first base node exceeds the predetermined access authorization level assigned to the entity.

[0008] The method can also include logically organizing the computer system in the form of a tree hierarchy having a plurality of leaf nodes and higher-level nodes. A plurality of the base nodes can be defined as comprising respectively a plurality of leaf nodes of the tree hierarchy. Higher-level nodes can be defined as aggregations of the base nodes. Further, the method can include the step of identifying within the hierarchy any higher-level nodes that are aggregations comprising the first base node.

[0009] The method can also include identifying within the hierarchy any nodes that directly or indirectly comprise children of any of the higher-level nodes that are aggregations comprising the first base node. The minimum required entity access level can thereafter be updated for any base nodes that directly or indirectly comprise children of any of the higher-level nodes that are aggregations comprising the first base node.

[0010] For example the updating step can include comparing the entity's predetermined access authorization level against the minimum required access level of the higher-level nodes that are aggregations comprising the first base node. Thereafter,

a minimum required access level of any the base node that is also a member of any aggregation comprising the first base node can be updated if a minimum required access level for the higher-level node comprising the aggregation has a required access level that is higher than the entity's predetermined access level.

BRIEF DESCRIPTION OF THE DRAWINGS

[0011] Fig. 1 is a representation of data primitives and hierarchical graph that is useful for understanding the invention.

[0012] Fig. 2A is an example of a partially ordered set with transitive closure table.

[0013] Fig. 3 is an example of a temporal order table.

[0014] Fig. 4A is an example of a process/user access table.

[0015] Fig. 5 is an example of a combinatorial classification table.

[0016] Fig. 6 is a flowchart that is useful for understanding the invention.

[0017] Fig. 7 is a flowchart that is useful for understanding the invention.

[0018] Figs. 8A-8E show a series of tables that are useful for understanding how the inventive process can operate in one example.

[0019] Figs. 9A-9J show a series of tables that are useful for understanding how the inventive process can operate in a second example.

[0020] Fig. 10 is a drawing of a computer system that is useful for understanding the implementation of the inventive arrangements.

DETAILED DESCRIPTION OF THE PREFERRED EMBODIMENTS

[0021] The invention concerns a method and system for using an adaptive lattice mechanism to enforce computer security. Data and function access security levels form an initial basis for controlling access. These security access primitives can be organized within a partially ordered set (POSET) so as to define a hierarchical, directed graph. The security access primitives can form base nodes in the hierarchical, directed graph. Higher level nodes within the graph represent information aggregation sets and/or temporal patterns of access. Each of the nodes within the graph can have an associated security level representing the mandatory security level for the particular aggregation or pattern. Access authorities are maintained dynamically for each user/process, thereby allowing system objects to have multiple levels of access classification based on historical access by each user.

[0022] Referring now to Fig. 1, a secure computer system can comprise a plurality of object types 102_1-102_4 and system functions 104_1-104_3. The object types can include one or more information types A, B, C, D. Instantiations 106 of object types can include multiple type instances 108 as illustrated. Further, each object type can have a minimum required security access level associated therewith. In Fig. 1, the minimum required security access level for each object type 102_1-102_4 is represented in parenthesis along with the letter identifying the information type. For example, object 102_4 in Fig. 1 is labeled as "D(2)". The number 2 in parenthesis indicates that information type D has a minimum required security access level of two. Any process or user requesting to access any instantiation of object type D must have a security access level greater than or equal to two. Similarly, access to object 102_2, which is shown as B(1), requires a security access level of one or higher.

[0023] The system functions 104_1-104_3 represent functions which can be accessed by a process or user. In Fig. 1, the functions are shown as including directory (dir), execute (exec), and delete (del). However, it should be understood that these are merely intended as some examples of computer system functions, and the invention is not limited to any particular type of computer system function. Similar to the notation

described above with respect to object types 102_1-102_4, each system function 104_1-104_3 in Fig. 1 is followed by a number in parenthesis. The number represents a minimum security access level required for any process or user to access that particular function. Thus, for example, the "exec" system function labeled exec(2) requires that a process or user possess a security level of at least two in order to access that function.

[0024] The various object types 102_1-102_4 and system functions 104_1-104_3 can be represented in a hierarchical tree graph as shown in Fig. 1. According to one aspect of the invention, the various object types and system functions can be defined as a plurality of leaf or base nodes 110 in the hierarchical tree 100. Further, higher-level nodes 112 can be constructed to represent aggregations of base nodes 110. As illustrated in Fig. 1, higher-level nodes 112 can include aggregations of base nodes 110, as well as higher order aggregations, i.e. aggregations of previously constructed aggregations.

[0025] According to one embodiment of the invention, the hierarchical directed graph of Fig. 1 can be implemented by organizing the object types 102_1-102_4 and system functions 104_1-104_3 within a partially ordered set (POSET). A POSET defines relationships that exist between pairs of elements, e.g. $x \rightarrow R \rightarrow y$ within a set of elements. Within the set of elements, there exists pairs of elements, e.g. m and n, for which no relation R exists. Thus, the set is partially ordered. Consequently, POSETs may have multiple root and leaf nodes in contrast to a tree structure which has a single root node and multiple leaf nodes. Because of the multiplicity of root nodes representing information access and operational functions for which the security operations are to be enforced, the POSET is used to represent the multiplicity of security relationships. Fig. 2A is an example of such a POSET 200 with a transitive closure table 202 that can be produced for the hierarchical tree 100 in Fig. 1.

[0026] Referring again to Fig. 1, it can be seen that relationships can be asserted for temporal access patterns. In this figure the curved arrows labeled T1 denote a temporal ordering between the accesses defined by items 114_1 and 114_2. Thus, for item 114_2, a temporal order is asserted between items 104_1 and 104_2, e.g. $104_1 \rightarrow 104_2$. Thus, node

d(3) not only identifies an aggregation of the primitive functions denoted by 104_1 and 104_2 but also specifies that an explicit temporal ordering exists in that 104_1 is accessed before 104_2. So, for the security policy associated with item 114_2 to be activated, not only must both 104_1 and 104_2 be accessed but they must be accessed in the order indicated by the temporal relationship. In addition to specifying a temporal order of access activities for a single node, temporal relations may be subsumed within other nodes through aggregation. This is illustrated by item 114_1 in Figure 1. Item 114_1 has three access items associated with the node, item 102_4, 114_2, and 104_3. As shown on the diagram, a temporal ordering has been identified that specifies $102_4 \rightarrow 114_2 \rightarrow 104_3$. However, item 114_2 is an aggregation of access operations. Thus the operations identified by item 114_2 become subsumed into the overall temporal ordering of item 114_1 and the full temporal order is $102_4 \rightarrow 104_1 \rightarrow 104_2 \rightarrow 104_3$, where item 114_2 in the original temporal order has been replaced by its constituent parts, $104_1 \rightarrow 104_2$.

[0027] Fig. 3 is the Temporal Order Table (TOT) that captures the above relationships. The TOT is useful for capturing the relative temporal order of actions and allows relative or approximate temporal pattern matching to identify hostile actions. So, for access to node d, item 114_2, the table shows that first the dir operation, item 104_1, is performed, followed by the exec operation, item 104_2. This ordering is shown in the row labeled "d" with a numerical ordering of the accesses listed in the columns. Figure 3 further shows that for node e, item 114_1, the initial access is a data class D, item 102_4, followed by the constituent elements of node d, item 114_2, which is the dir, item 104_1, and exec, item 104_2, operations. In this case the row labeled "e" stores the order of the accesses using numerical values. In the case of row "e", the inclusion of the access ordering associated with node d, item 114_2 is shown as 2.1 and 2.2 representing the fact that both accesses are grouped as the second item in the temporal ordering for node e, item 114_1, and that the order for these grouped items is denoted by the second number after the 2.

[0028] Referring now to Fig. 4A, there is shown an example of a Process/User Access Table (PUAT) that can be used in the present invention. The PUAT is a table of access authority that shows the minimum security level that each particular process or

user is required to have in order to access the object type 102 or system function 104 in Fig. 1. For example, Fig. 3 shows that users 1-5 can be required (at least initially) to possess a security access level of at least one (1) to access information type B. Since users 1-5 in Fig. 4A all have a security access level of at least one (1), this means that all users can, at least initially, access information type B.

[0029] Significantly, however, the PUAT is a dynamic table in which the minimum security level required for a particular process or user to access a particular object type 102 or system function 104 can be changed depending on access history and/or identified temporal patterns. In this way, access authorities are maintained dynamically for each user allowing system objects to have multiple levels of access classification based on historical access by a particular process or user.

[0030] The transitive closure table of the complete set of access operations and aggregate nodes is illustrated in Figure 2A. The transitive closure table is obtained by adding a row and column for each of the aggregate nodes to the table of primitive actions. This yields an n-by-n table where the number of columns and rows are equal and the number of rows and columns is equal to the sum of the number primitive operations and number of aggregation nodes. A subset, item 202, of the transitive closure table of the POSET of Fig. 2A is then used to produce a combinatorial classification table (CCT) which is illustrated in Fig. 5. The CCT is obtained by taking the subset of the transitive closure table, item 202, corresponding to the set of aggregations shown in the columns and the primitive operations shown in the rows. This subset identifies the dependencies between the primitive access operations and the aggregations to which they are associated. This subset of the transitive closure, item 202, is then flipped about its diagonal axis yielding the aggregation items, a through e as the rows and the primitive access operations as the columns, as shown in Fig. 2B. Finally, each row is inspected and for each column containing a 1 entry, the number 1 is replaced with the security access level associated with the aggregation. This yields the final CCT as illustrated in Figure 5.

[0031] A flowchart that is useful for understanding the invention is shown in Figs. 6 and 7. As illustrated therein, the process can begin in step 602 of Fig. 6 by monitoring requests from computer system users and/or processes. Messages are tested in step 604 to determine if they comprise requests to access an information type or system function. If so, then the system continues on to step 606 to determine if the request completes a temporal access pattern for the particular user. If the request does complete a temporal access pattern, this means that the sequence of operations performed matches an identified pattern and is subject to the security access level specified for the that temporal order. If a temporal pattern is completed, the user's access level is compared to the access level required for the requested access action, illustrated in step 607. Note that the temporal ordering of primitive access operations mandates that the operations occur in the order specified for the security policy to be enforced. Thus, in Figure 1, if 104_2 is accessed first followed by item 104_1, the security policy associated with node d, item 114_2, will not be activated because the temporal order was not satisfied. If the access level of the user is not sufficient for the requested action, then the request is rejected in step 608.

[0032] If the request does not complete a temporal access pattern for the particular user or the user's access level is sufficient for the temporal pattern completed, then the system continues on to step 610 and logs the request in the Temporal Access Table (TAT). As shown in Fig. 4B, the Temporal Access Table maintains a history of the primitive operations performed by a user. As a user is granted authorization to perform a primitive access operation, the operation is time-stamped and stored within the TAT. The time stamps are compared against the temporal patterns identified in the Temporal Order Table, Figure 3, to check for matches. Thus, in Fig. 4B user 1 performed a dir operation at time 102 and then requested an exec operation at time 112. Since 112 is after 102, this request would trigger a match in the Temporal Order Table for node d, item 114_2 in Figure 1, and the request would be denied. However, in the case of user 3, the exec operation was performed at time 103 followed by the dir operation at time 111. This pair does not match the defined temporal order and the operations are permitted.

[0033] In step 612, the computer system makes a determination as to whether the security access level of the user making the request is less than the current minimum required security access level for the specified information type. This determination can be completed by reference to the table in Fig. 4A. If the user does not have authorization for at least the current minimum required security access level, then the request is rejected. Alternatively, if the user does have a sufficiently high security access level then the request is granted in step 616.

[0034] Aggregation nodes 112 are comprised of two or more nodes which may be base nodes 110, other aggregation nodes 112, or a combination of both base and aggregation nodes. Accordingly, such aggregation nodes will often have a higher minimum required security level for permitting access as compared to security levels required for access to participant information types and/or system functions that comprise base nodes 110. This is true because aggregated data is often of a more sensitive nature since it provides greater context and can identify relationships between the various individual information types. Consequently aggregated information will inevitably be of greater interest to unauthorized users and system administrators will naturally wish to impose higher level restrictions on its access.

[0035] Still, it will be appreciated that access to all of the information types or system functions associated with base nodes 110 that are participants in a particular aggregation node is, in many instances, tantamount to directly accessing the aggregation node. Accordingly, it can be desirable to increase a security authorization level necessary for a particular user or process to access certain information types once the user or process has accessed certain other information types. For example, this may be true in those instances where both of the data types are participants in a common aggregation node. In such instances, it can be desirable to increase the required security authorization level for a particular user to access a base node to be at least equal to the security authorization level of an aggregation node to which the base node is a participant.

[0036] Accordingly, the process can continue in step 702 of Fig. 7 by identifying all higher-level aggregation nodes 112 in which the base node containing the requested information type is a participant. In step 704 the computer system can determine if the minimum required security level for access to identified aggregation nodes is greater than the particular user's authorized security access level. If so, then in step 706 the computer system can identify all base nodes that are also participants in that particular aggregation node. This can be accomplished, for example, by following all paths from the identified aggregation nodes back to all of their corresponding base nodes.

[0037] Once so identified, the minimum required security level for accessing base nodes of the information type that has been already accessed remains the same. However, the minimum required security level for the user to access the other participant base nodes (i.e., other than the originally requested base node) can be updated in step 708. For example, the required minimum security level to access a participant base node can be increased for a particular user to match the minimum required security level for accessing an aggregation node in which the participant base node is a participant.

[0038] The invention can be better understood by considering the following examples which are illustrative of the process.

[0039] <u>Example 1</u>

[0040] Referring to Figs. 1 and 8, consider the case in which access authorization for users 1-5 is established in accordance with PUAT in Fig. 8A. User 2 with access level 1, U2(1) can request access to an object 102_1 of information type A as previously described in relation to step 604. In accordance with step 606, the system consults the TOT (Temporal Order Table) in Fig. 8B and determined that the access request time does not complete a temporal access pattern. Subsequently, the request is logged in the (Temporal Access Table) as provided in step 610. In accordance with step 612 the request is tested to determine if user 2 has a sufficiently high level of access authorization. In this case U2(1) ≥ A(0) and therefore access is granted to the requested information type A in accordance with step 616.

[0041] Thereafter, in step 702 the computer system can identify aggregations with object A using the CCT (Combinatorial Classification Table) in Fig. 8C. In step 704, the system checks to determine if the minimum required security level for accessing the aggregation node 112_1 of type "a" is greater than the user's authorized security access level. In this case, the condition is satisfied since the user's authorized security access level is 1 and the minimum required level to access aggregation node 112_1 of type "a" is equal to 2. Accordingly, the system continues to step 706 and identifies any other base nodes 110 that are part of the aggregation node 112_1 of type "a". In this case, the system identifies information type B as being a participant in the aggregation of type "a".

[0042] Thereafter, in step 708 the PUAT in Fig. 8A is updated such that (1) the minimum security level required for accessing the originally requested base node 110 of information type "A" remains unchanged; and (2) the other participant of the aggregation node 112_1 are updated so that their minimum required security level is increased to equal to the minimum required security level established for the aggregation node "a". This can be expressed as follows: *If PUAT(i) < CCT(i) then CCT(i) → PUAT(i* . The result is an updated PUAT table as shown in Fig. 8D.

[0043] The updated table in Fig. 8D shows that for the base node 110 of information type A the minimum security access level continues to be zero. The notation 0/1 for information type A in Fig. 8D indicates that the object has a zero security level and is the first one accessed by User 2. However, with regard to User 2, the minimum security level for accessing an object of information type B in the PUAT of Fig. 8D has been increased to level 2.

[0044] Subsequently, if User 2 with access level 1, U2(1) requests access to an object 102_2 of information type B the system will determine in step 606 that the access request time does not complete a temporal access pattern. This is accomplished by comparing the access time to the TOT in Fig. 8E. The TOT is unchanged from its earlier state in Fig. 8B and therefore the request does not get rejected in step 606. However, in step 612, a check of the updated PUAT of Fig. 8D reveals that the minimum security level required for user 2 to access information of type B is now set to

level 2. Accordingly, the request is rejected in step 614. This can be expressed as U2(1) ¬≥ A(2) therefore deny access.

[0045] Example 2

[0046] Referring to Figs. 1 and 9, consider the case in which access authorization for users 1-5 is established in accordance with PUAT in Fig. 9A. User 3 with access level 2, U3(2) can request access to an object 102_1 of information type A as previously described in relation to step 604. In accordance with step 606, the system consults the TOT (Temporal Order Table) in Fig. 9B and determined that the access request time does not complete a temporal access pattern. Subsequently, the request is logged as provided in step 610. In accordance with step 612 the request is tested to determine if User 3 has a sufficiently high level of access authorization. In this case U3(2) ≥ A(0) and therefore access is granted to the requested object 102_1 in accordance with step 616.

[0047] Thereafter, in step 702 the computer system can identify aggregations with object A using the CCT (Combinatorial Classification Table) in Fig. 9C. In step 704, the system checks to determine if the minimum required security level for accessing the aggregation node 112_1 of type "a" is greater than the authorized security access level of user 3. In this case, the condition is not satisfied since the user's authorized security access level is 2 and the minimum required level to access aggregation node 112_1 (i.e., type "a") is equal to 2. Accordingly, the system concludes that the user has an adequate security access level and continues to step 706 where it identifies any other base nodes 110 that are part of the aggregation node 112_1. In this case, the system identifies 102_2 (information type B) as being a participant in the aggregation.

[0048] Thereafter, in step 708 the PUAT in Fig. 9A is updated such that (1) the minimum security level required for accessing the originally requested base node 110 (information type "A") remains unchanged; and (2) the other participant of the aggregation node 112_1 of type "a" are updated so that their minimum required security level is increased to equal to the minimum required security level established for the aggregation node 1121 of type "a". This can be expressed as follows: *If PUAT(i)* <

CCT(i) then CCT(i) → PUAT(i). The result is an updated PUAT table as shown in Fig. 9D.

[0049] The updated table in Fig. 9D shows that for the base node 102_1 of information type A the minimum security access level continues to be zero for User 3. The notation 0/1 for information type A in Fig. 9D indicates that the object has a zero security level and was the first information type accessed by User 3. However, the minimum security level for accessing an object 102_2 of information type B in the PUAT of Fig. 9D has been increased to level 2.

[0050] Subsequently, if User 3 with access level 2, U3(2) requests access to an object 102_4 of information type D, the computer system will determine in step 606 that the access request time does not complete a temporal access pattern. This is accomplished by comparing the access time to the TOT in Fig. 9E. The TOT is unchanged from its earlier state in Fig. 9B and therefore the request does not get rejected in step 606. In step 612, a check of the updated PUAT of Fig. 9D reveals that the minimum security level required for user 3 to access information of type D is set (as it was initially) at level 2. Accordingly, the request is granted in step 616. This can be expressed as U3(2) ≥ D(2) therefore grant access.

[0051] Thereafter, in step 702 the computer system can identify aggregations with the object of information type D using the CCT (Combinatorial Classification Table) in Fig. 9F. In this case node 102_4 (information type D) is a participant in aggregation node 112_2 of type "b". In step 704, the system checks to determine if the minimum required security level for accessing the aggregation node 112_2 is greater than the user's authorized security access level. In this case, the condition is satisfied since the user's authorized security access level is 2 and the minimum required level to access aggregation node 112_2 of type "b" is equal to 3. Accordingly, the system continues to step 706 and identifies any other base nodes 110 that are part of the aggregation node 112_2 of type "b". In this case, the system identifies information types A and B (nodes 102_1 and 102_2) as being a participant in the aggregation of node 112_2 of type "b".

[0052] Thereafter, in step 708 the PUAT in Fig. 9D is updated such that (1) the minimum security level required for accessing the originally requested base node 102_4 of information type "D" remains unchanged; and (2) the other participant of the aggregation node 112_2 of type "b" are updated so that their minimum required security level is increased to be equal to the minimum required security level established for the aggregation node 112_2 of information type "b". This can be expressed as follows: *If* $PUAT(i) < CCT(i)$ *then* $CCT(i) \rightarrow PUAT(i)$. The result is an updated PUAT table as shown in Fig. 9G.

[0053] The updated table in Fig. 9G shows that for the base node 102_4 of information type D the minimum security access level continues to be two. The notation 2/2 for information type D in Fig. 9G indicates that the object 102_4 has a security level of 2 and is the second one accessed by User 3. However, with regard to User 3, the minimum security level for accessing an object of information type B in the PUAT of Fig. 9G has been increased to level 3.

[0054] Continuing with the foregoing example, User 3 with access level 2, U3(2) can request access to an object 102_2 of information type B. As illustrated in Fig. 9H, the access request time does not complete a temporal access pattern (step 606). However, in step 612 a comparison is made of the security authorization level for User 3 to the minimum security level required for User 3 to access as specified by the PUAT in Fig. 9G. This test reveals that User 3 (security authorization level 2) does not have a sufficiently high security level to access information type B which now has a minimum required security of 3, at least with respect to requests by user 3. This can be expressed as $U3(2) \neg\geq B(3)$. Accordingly, the request for access is rejected in step 614.

[0055] The inventive arrangements described herein can be used in conjunction with a wide variety of computer systems. These can include stand-alone computer systems, computer networks or client-server arrangements as shown in Fig. 10. The invention can be integrated within computer application software or implemented as an external component to existing software systems to provide modular accessibility. Further, the invention is not restricted to use with any particular type of software application or

access request from any particular type of entity. Accordingly, to the extent that the invention has been described herein in terms of requests from users or processes, it will be understood by those skilled in the art that the techniques described herein can have much broader application. For example, the invention can be used to provide security for database access, to operating system calls, and/or to identifying hostile patterns of remote access which may be initiated by computer viruses and worms.

[0056] Referring again to Fig. 10, it will be appreciated that the present invention can be realized in software in a centralized fashion in one computer system 1000, or in a distributed fashion where different elements are spread across several interconnected computer systems 1000, 1002. Any kind of computer system or other apparatus adapted for carrying out the methods described herein is suited. A typical implementation can include a general purpose computer system with a computer program that, when being loaded and executed, controls the computer system such that it carries out the methods described herein.

[0057] The present invention also can be embedded in a computer program product, which comprises all the features enabling the implementation of the methods described herein, and which when loaded in a computer system is able to carry out these methods. Computer program in the present context means any expression, in any language, code or notation, of a set of instructions intended to cause a system having an information processing capability to perform a particular function either directly or after either or both of the following: a) conversion to another language, code or notation; b) reproduction in a different material form.

[0058] This invention can be embodied in other forms without departing from the spirit or essential attributes thereof. Accordingly, reference should be made to the following claims, rather than to the foregoing specification, as indicating the scope of the invention.

CLAIMS

We claim:

1. A method for secure access to a computer system, comprising the steps of:

receiving in said computer system a request from an entity with a predetermined access level for access to a first base node representing at least one of an information type and a computer system function;

determining if said access request completes a prohibited temporal access pattern for said entity; and

comparing a minimum access level established for said first base node to said predetermined access level; and

granting said access request only if it does not complete a prohibited temporal access pattern for said entity, and said minimum access level for said first base node does not exceed said predetermined access level.

2. The method according to claim 1, further comprising the step of denying said request if said access request completes a prohibited temporal access pattern for said entity.

3. The method according to claim 1, further comprising the step of denying said request if said minimum access level for said first base node exceeds said predetermined access level for said entity.

4. The method according to claim 1, further comprising the steps of:

logically organizing said computer system in the form of a tree hierarchy having a plurality of leaf nodes and higher-level nodes;

defining a plurality of said base nodes as comprising respectively a plurality of leaf nodes of said tree hierarchy; and

defining said higher-level nodes as aggregations of said base nodes.

5. The method according to claim 4 further comprising the step of identifying within said hierarchy any higher-level nodes that are aggregations comprising said first base node.

6. The method according to claim 5, further comprising the step of identifying within said hierarchy any nodes that comprise children of any generation of said higher-level nodes that are aggregations comprising said first base node.

7. The method according to claim 6, further comprising the step of updating a minimum required entity access level for any base nodes that comprise children of any generation of said higher-level nodes that are aggregations comprising said first base node.

8. The method according to claim 7, wherein said updating step further comprises the steps of:

comparing said entity's predetermined access level against the minimum required access level of said higher-level nodes that are aggregations comprising said first base node; and

updating a minimum required access level of any said base node that is also a member of any aggregation comprising said first base node if a minimum required access level for said higher-level node comprising said aggregation has a required access level that is higher than said entity's predetermined access level.

9. The method according to claim 1, further comprising the steps of:

comparing said entity's predetermined access level against the minimum required access level of at least one higher-level node that is an aggregation of base nodes including said first base node; and

updating a minimum required access level of any said base node that is also a member of any aggregation comprising said first base node if a minimum required access level for said higher-level node comprising said aggregation has a required access level that is higher than said entity's predetermined access level.

10. A method for restricting access to a computer system having a plurality of logical base nodes representing at least one of an information type and a computer system function, and a plurality of higher-level nodes arranged together with said base nodes in the form of a tree hierarchy, comprising the steps of:

receiving in said computer system a request from an entity with a predetermined access level for access to a first base node;

determining if said access request completes a prohibited temporal access pattern for said entity; and

comparing a minimum access level established for said first base node to said predetermined access level; and

granting said access request only if it does not complete a prohibited temporal access pattern for said entity, and said minimum access level for said first base node does not exceed said predetermined access level.

11. A secure computer system comprising:

a plurality of logical base nodes representing at least one of an information type and a computer system function;

a plurality of higher-level nodes arranged together with said base nodes in the form of a tree hierarchy;

a computer system interface capable of receiving a request from an entity with a predetermined access level for access to a first base node;

a temporal access table;

processing means programmed for comparing said access request to said temporal access table to determine if said access request completes a prohibited temporal access pattern for said entity, and for comparing a minimum access level established for said first base node to said predetermined access level; and

wherein said processing means grants said access request only if it does not complete a prohibited temporal access pattern for said entity, and said minimum access level for said first base node does not exceed said predetermined access level.

12. The secure computer system according to claim 11, wherein said processing means denies said request if said access request completes a prohibited temporal access pattern for said entity.

13. The secure computer system according to claim 11, wherein said processing means denies said request if said minimum access level for said first base node exceeds said predetermined access level for said entity.

14. The secure computer system according to claim 11 wherein said higher-level nodes are aggregations of said base nodes.

15. The secure computer system according to claim 14 wherein said processing means identifies within said hierarchy any higher-level nodes that are aggregations comprising said first base node.

16. The secure computer system according to claim 15 wherein said computer processing means identifies within said hierarchy any nodes that comprise children of any generation of said higher-level nodes that are aggregations comprising said first base node.

17. The secure computer system according to claim 16 wherein said processing means updates a minimum required entity access level for any base nodes that comprise children of any generation of said higher-level nodes that are aggregations comprising said first base node.

18. The secure computer system according to claim 17 wherein said processing means compares said entity's predetermined access level against the minimum required access level of said higher-level nodes that are aggregations comprising said first base node; and

automatically updates a minimum required access level of any said base node that is also a member of any aggregation comprising said first base node if a minimum required access level for said higher-level node comprising said aggregation has a required access level that is higher than said entity's predetermined access level.

19. The secure computer system according to claim 11 wherein said processing means compares said entity's predetermined access level against the minimum required access level of at least one higher-level node that is an aggregation of base nodes including said first base node; and

updates a minimum required access level of any said base node that is also a member of any aggregation comprising said first base node if a minimum required access level for said higher-level node comprising said aggregation has a required access level that is higher than said entity's predetermined access level.

ENFORCING COMPUTER SECURITY UTILIZING AN ADAPTIVE LATTICE MECHANISM

ABSTRACT

Method and apparatus for ensuring secure access to a computer system (1000). The method can begin with the step of receiving in the computer system a request from an entity (using 1002). The entity can have a predetermined access authorization level for access to a first base node (110) representing an information type (102) or a computer system function (104). The system determines if the access request completes a prohibited temporal access pattern for the entity. The system also compares a minimum access level established for the first base node to the predetermined access authorization level assigned to the entity. Thereafter, the system can grant the access request only if the minimum access level for the first base node does not exceed to the predetermined access authorization level.

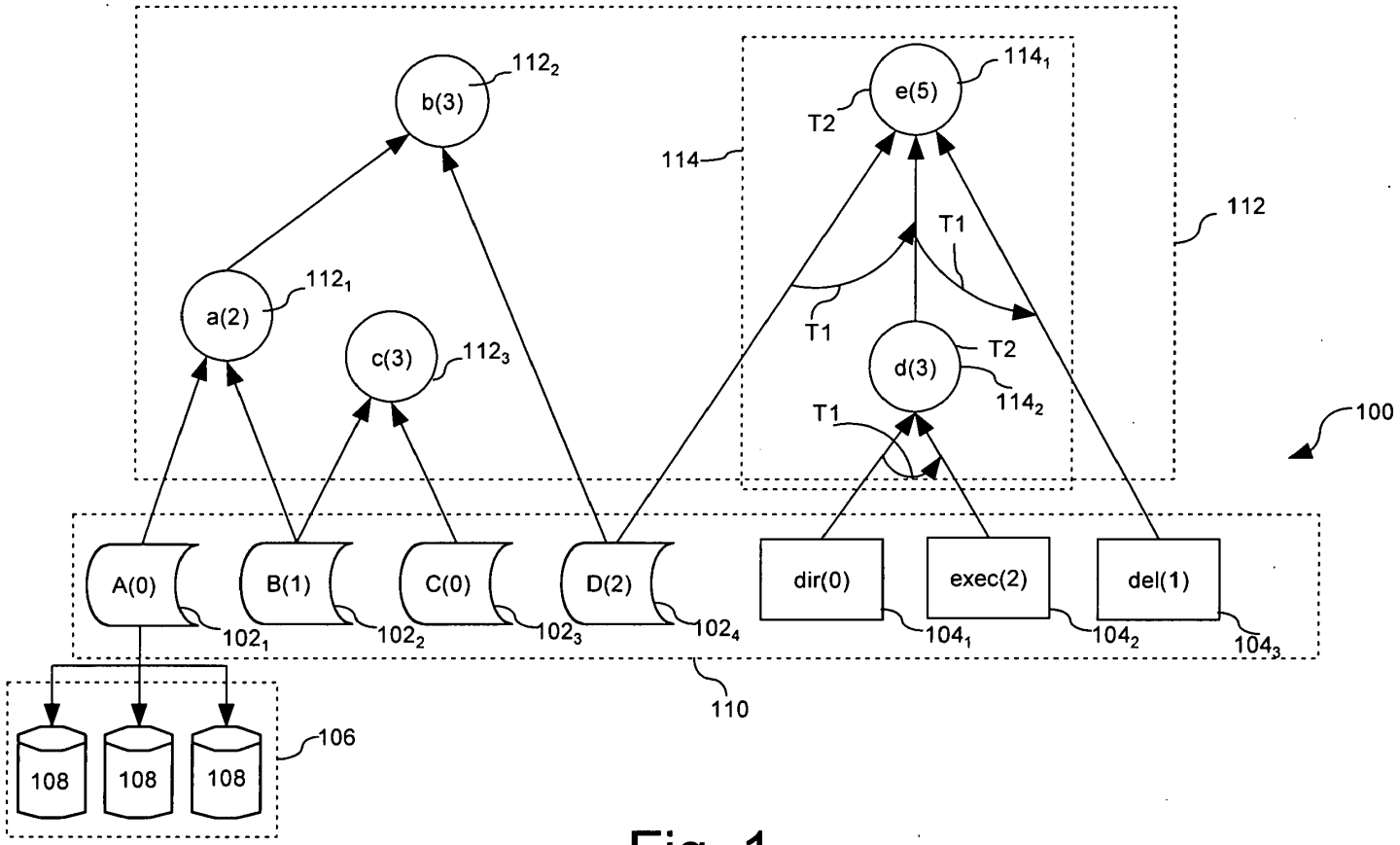
b(3)
112₂
e(5)
114₁
T2
114
112
T1
a(2)
112₁
c(3)
112₃
T1
d(3)
T2
114₂
T1
100
A(0)
B(1)
C(0)
D(2)
dir(0)
exec(2)
del(1)
102₁
102₂
102₃
102₄
104₁
104₂
104₃
110
106
108
108
108

Fig. 1

Partially Ordered Set with Transitive Closure Table

POSET	A	B	C	D	dir	exec	del	a	b	c	d	e
A	1	0	0	0	0	0	0	1	1	0	0	0
B	0	1	0	0	0	0	0	1	1	1	0	0
C	0	0	1	0	0	0	0	0	0	1	0	0
D	0	0	0	1	0	0	0	0	1	0	0	1
dir	0	0	0	0	1	0	0	0	0	0	1	1
exec	0	0	0	0	0	1	0	0	0	0	1	1
del	0	0	0	0	0	0	1	0	0	0	0	1
a	0	0	0	0	0	0	0	1	1	0	0	0
b	0	0	0	0	0	0	0	0	1	0	0	0
c	0	0	0	0	0	0	0	0	0	1	0	0
d	0	0	0	0	0	0	0	0	0	0	1	1
e	0	0	0	0	0	0	0	0	0	0	0	1

202

Fig. 2A

	A	B	C	D	dir	exec	del
a	1	1	0	0	0	0	0
b	1	1	0	1	0	0	0
c	0	1	1	0	0	0	0
d	0	0	0	0	1	1	0
e	0	0	0	1	1	1	1

Fig. 2B

Temporal Order Table (TOT)

TOT	A	B	C	D	dir	exec	del
a							
b							
c							
d					1	2	
e				1	2.1	2.2	3

Fig. 3

Process/User Access Table (PUAT)

Usr	A	B	C	D	dir	exec	del
1(1)	0	1	0	2	0	2	1
2(1)	0	1	0	2	0	2	1
3(2)	0	1	0	2	0	2	1
4(1)	0	1	0	2	0	2	1
5(3)	0	1	0	2	0	2	1

Fig. 4A

Temporal Access Table (TAT)

Usr	A	B	C	D	dir	exec	del
1(1)					102	112	
2(1)							
3(2)					111	103	
4(1)							
5(3)							

Fig. 4B

Combinatorial Classification Table (CCT)

CCT	A	B	C	D	dir	exec	del
a	2	2	0	0	0	0	0
b	3	3	0	3	0	0	0
c	0	3	3	0	0	0	0
d	0	0	0	0	3	3	0
e	0	0	0	5	5	5	5

Fig. 5

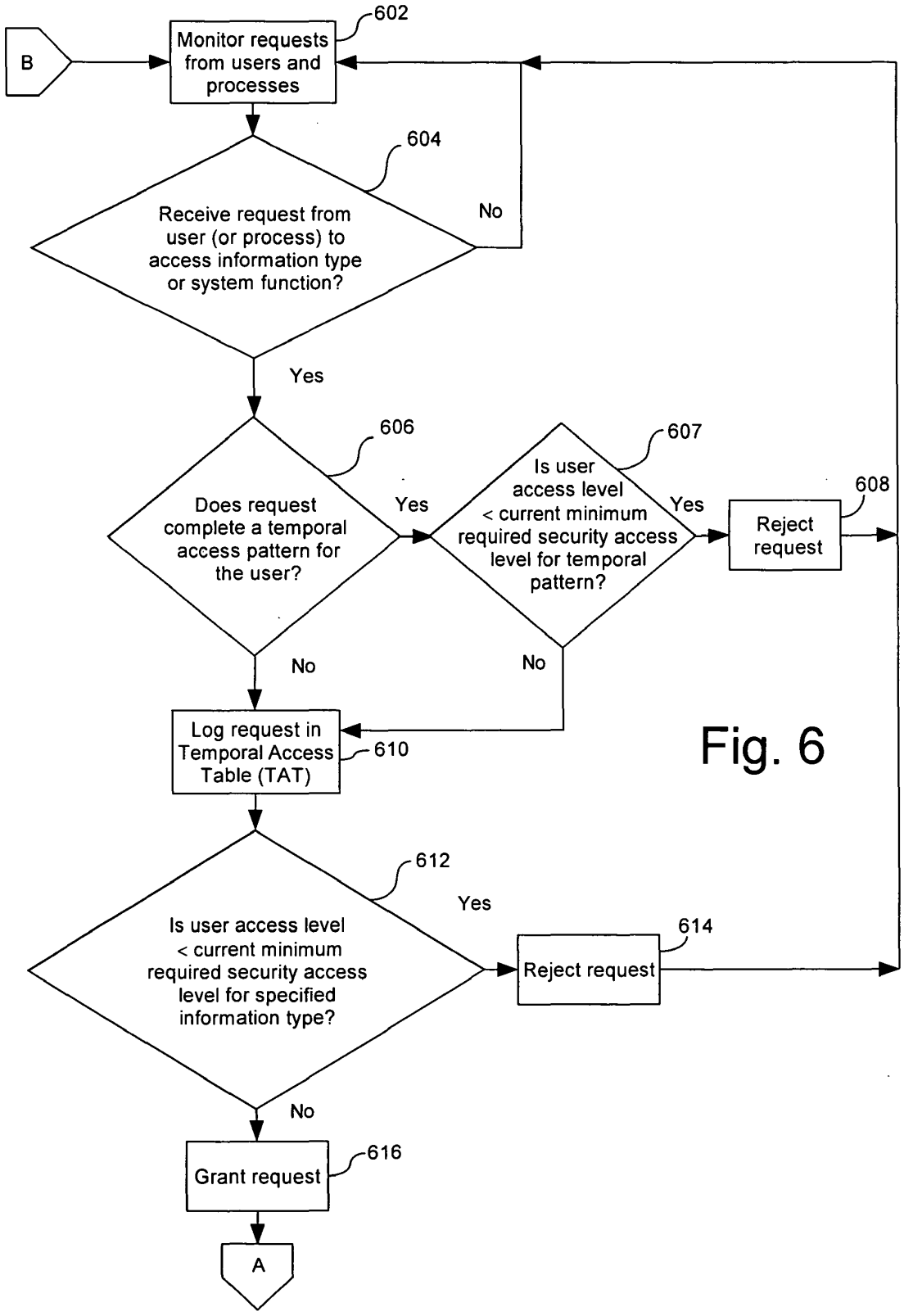
B
Monitor requests from users and processes
602
604
Receive request from user (or process) to access information type or system function?
No
Yes
606
Does request complete a temporal access pattern for the user?
Yes
607
Is user access level < current minimum required security access level for temporal pattern?
Yes
608
Reject request
No
No
Log request in Temporal Access Table (TAT)
610
612
Is user access level < current minimum required security access level for specified information type?
Yes
614
Reject request
No
Grant request
616
A

Fig. 6

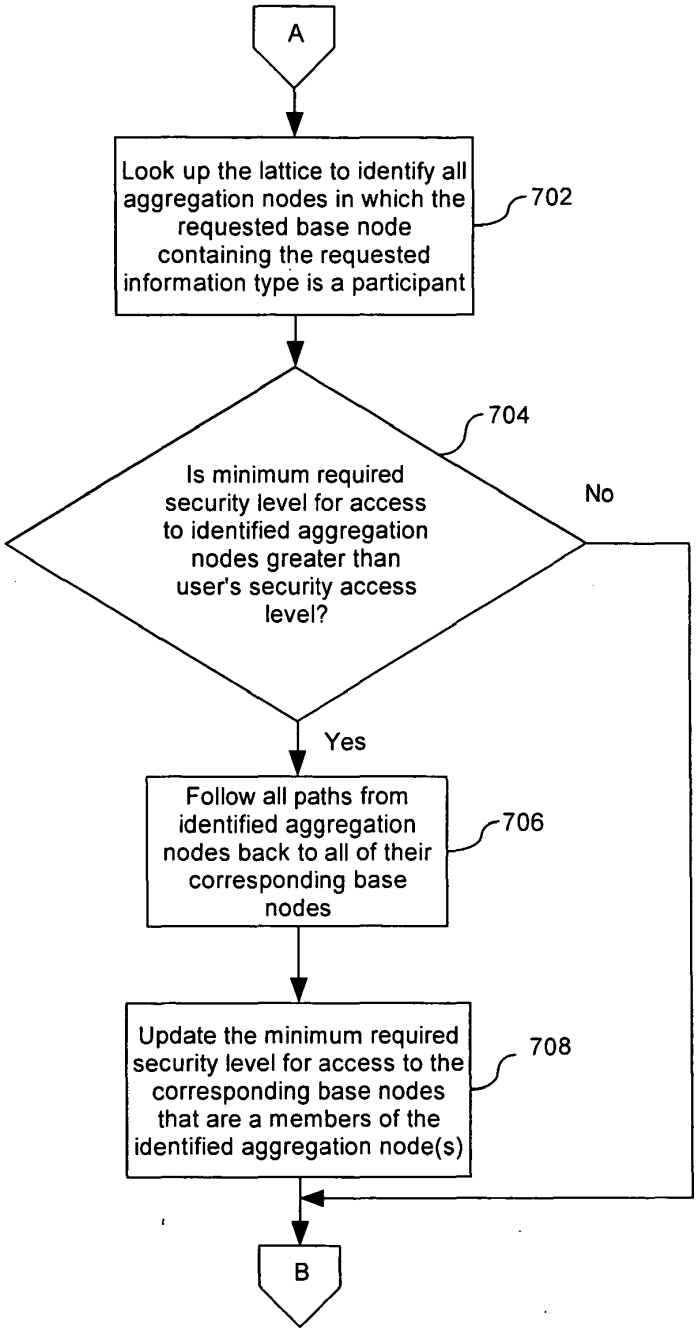
A
Look up the lattice to identify all aggregation nodes in which the requested base node containing the requested information type is a participant
702
Is minimum required security level for access to identified aggregation nodes greater than user's security access level?
704
No
Yes
Follow all paths from identified aggregation nodes back to all of their corresponding base nodes
706
Update the minimum required security level for access to the corresponding base nodes that are a members of the identified aggregation node(s)
708
B

Fig. 7

Fig. 8A

Usr	A	B	C	D	dir	exec	del
1(1)	0	1	0	2	0	2	1
2(1)	0	1	0	2	0	2	1
3(2)	0	1	0	2	0	2	1
4(1)	0	1	0	2	0	2	1
5(3)	0	1	0	2	0	2	1

Fig. 8B

TOT	A	B	C	D	dir	exec	del
a							
b							
c							
d					1	2	
e				1	2.1	2.2	3

Fig. 8C

CCT	A	B	C	D	dir	exec	del
a	2	2	0	0	0	0	0
b	3	3	0	3	0	0	0
c	0	3	3	0	0	0	0
d	0	0	0	0	3	3	0
e	0	0	0	5	5	5	5

Fig. 8D

Usr	A	B	C	D	dir	exec	del
1(1)	0	1	0	2	0	2	1
2(1)	0/1	2	0	2	0	2	1
3(2)	0	1	0	2	0	2	1
4(1)	0	1	0	2	0	2	1
5(3)	0	1	0	2	0	2	1

Fig. 8E

TOT	A	B	C	D	dir	exec	del
a							
b							
c							
d					1	2	
e				1	2.1	2.2	3

Fig. 9A

Usr	A	B	C	D	dir	exec	del
1(1)	0	1	0	2	0	2	1
2(1)	0	1	0	2	0	2	1
3(2)	0	1	0	2	0	2	1
4(1)	0	1	0	2	0	2	1
5(3)	0	1	0	2	0	2	1

Fig. 9B

TOT	A	B	C	D	dir	exec	del
a							
b							
c							
d					1	2	
e				1	2.1	2.2	3

Fig. 9C

CCT	A	B	C	D	dir	exec	del
a	2	2	0	0	0	0	0
b	3	3	0	3	0	0	0
c	0	3	3	0	0	0	0
d	0	0	0	0	3	3	0
e	0	0	0	5	5	5	5

Fig. 9D

Usr	A	B	C	D	dir	exec	del
1(1)	0	1	0	2	0	2	1
2(1)	0	1	0	2	0	2	1
3(2)	0/1	2	0	2	0	2	1
4(1)	0	1	0	2	0	2	1
5(3)	0	1	0	2	0	2	1

Fig. 9E

TOT	A	B	C	D	dir	exec	del
a							
b							
c							
d					1	2	
e				1	2.1	2.2	3

Fig. 9F

CCT	A	B	C	D	dir	exec	del
a	2	2	0	0	0	0	0
b	3	3	0	3	0	0	0
c	0	3	3	0	0	0	0
d	0	0	0	0	3	3	0
e	0	0	0	5	5	5	5

Fig. 9G

Usr	A	B	C	D	dir	exec	del
1(1)	0	1	0	2	0	2	1
2(1)	0	1	0	2	0	2	1
3(2)	0/1	3	0	2/2	0	2	1
4(1)	0	1	0	2	0	2	1
5(3)	0	1	0	2	0	2	1

Fig. 9H

TOT	A	B	C	D	dir	exec	del
a							
b							
c							
d					1	2	
e				1	2.1	2.2	3

Fig. 9J

Usr	A	B	C	D	dir	exec	del
1(1)	0	1	0	2	0	2	1
2(1)	0	1	0	2	0	2	1
3(2)	0/1	3	0	2/2	0	2	1
4(1)	0	1	0	2	0	2	1
5(3)	0	1	0	2	0	2	1

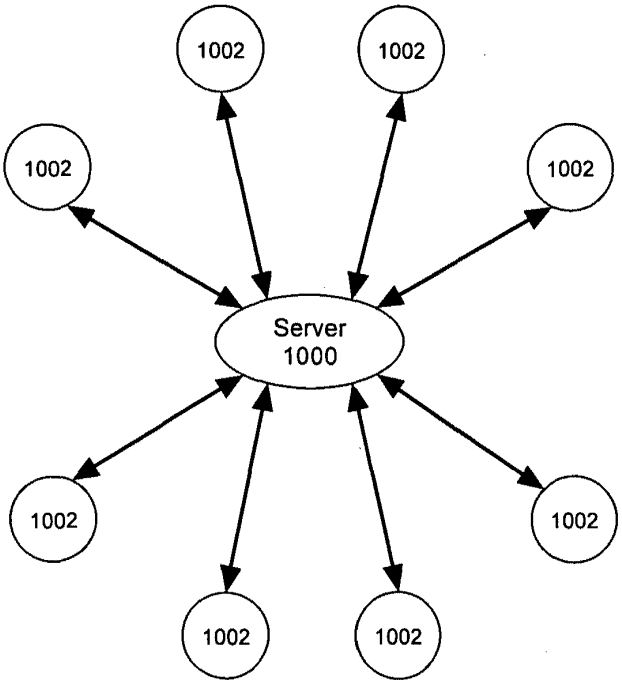

Fig. 10

US

Sacco & Associates, P.A.

COMBINED DECLARATION FOR PATENT APPLICATION AND POWER OF ATTORNEY (Includes Reference to PCT International Applications)	ATTORNEY DOCKET NUMBER 7162-0110

As a below named inventor, I hereby declare that:

My residence, mailing address and citizenship are as stated below next to my name.

I believe that I am the original and first inventor of the subject matter which is claimed and for which a patent is sought on the invention entitled:

ENFORCING COMPUTER SECURITY UTILIZING AN ADAPTIVE LATTICE MECHANISM

the specification of which (check only one item below):

[x] is attached hereto.

[ ] was filed as U.S. Patent Application Serial Number_____ on _____, as amended on _ (if applicable).

[ ] was filed as a PCT international application number _____ on _____, as amended on __(if applicable).

I hereby state that I have reviewed and understand the contents of the above-identified specification, including the claims, as amended by any amendment referred to above.

I acknowledge the duty to disclose information which is material to patentability as defined in 37 CFR §1.56, including for continuation-in-part applications, material information which became available between the filing date of the prior application and the national or PCT international filing date of the continuation-in-part application.

I hereby claim foreign priority benefits under 35 U.S.C. §119(a)-(d) or (f), or §365(b) of any foreign application(s) for patent, inventor's or plant breeder's rights certificate(s), or §365(a) of any PCT international application which designated at least one country other than the United States of America, listed below and have also identified below any foreign application(s) for patent, inventor's or plant breeder's rights certificate(s), or any PCT international application having a filing date before that of the applications on which priority is claimed:

Prior Foreign Application Number(s)	Country	Foreign Filing Date (MM/DD/YYYY)	Priority Not Claimed	Certified Copy Attached?
			☐	☐ YES ☐ NO
			☐	☐ YES ☐ NO
			☐	☐ YES ☐ NO
			☐	☐ YES ☐ NO

☐ Additional foreign application numbers are listed on a supplemental priority data sheet PTO/SB/02B attached hereto:

{00001064;}

Express Mail Label:
EV 417207036 US

US

Sacco & Associates, P.A.

COMBINED DECLARATION FOR PATENT APPLICATION AND POWER OF ATTORNEY (Includes Reference to PCT International Applications)	ATTORNEY DOCKET NUMBER 7162-0110

I hereby claim the benefit under 35 U.S.C. Sections 120 or 119(e) of any United States application(s) listed below and, insofar as the subject matter of each of the claims of this application is not disclosed in the prior United States application in the manner provided by the first paragraph of Title 35, United States Code, Section 112, I acknowledge the duty to disclose material information as defined in Title 37, Code of Federal Regulations, Section 1.56(a) which occurred between the filing date of the prior application and the national or PCT international filing date of this application:

PRIOR U.S. APPLICATIONS OR PCT INTERNATIONAL APPLICATIONS DESIGNATING THE U.S. FOR BENEFIT UNDER 35 U.S.C. §120:

U.S. APPLICATIONS		STATUS (Check One)		
U.S. APPLICATION NUMBER	U.S. FILING DATE	PATENTED	ABANDONED	PENDING

PCT APPLICATIONS DESIGNATING THE U.S.					
PCT APPLICATION NUMBER	PCT FILING DATE	U.S. SERIAL NUMBERS			

POWER OF ATTORNEY: As a named inventor, I hereby appoint registered patent practitioners associated with **Customer Number 39207** to prosecute this application and transact all business in the U.S. Patent and Trademark Office connected therewith.

Send Correspondence to: ***Customer Number 39207***	Direct Telephone Calls to: Robert J. Sacco
Sacco & Associates, P.A. P. O. Box 30999 Palm Beach Gardens, FL 33420-0999	561-626-2222

201	FULL NAME OF INVENTOR	FAMILY NAME KOVARIK, Jr.	FIRST GIVEN NAME Vincent	SECOND GIVEN NAME Joseph
	RESIDENCE & CITIZENSHIP	CITY Melbourne	STATE OR COUNTRY FL	COUNTRY OF CITIZENSHIP US
	MAILING ADDRESS	MAILING ADDRESS 4497 Pinewood Road	CITY Melbourne	STATE & ZIP CODE/COUNTRY FL 32934-9018
202	FULL NAME OF INVENTOR	FAMILY NAME	FIRST GIVEN NAME	SECOND GIVEN NAME
	RESIDENCE & CITIZENSHIP	CITY	STATE OR COUNTRY	COUNTRY OF CITIZENSHIP
	MAILING ADDRESS	MAILING ADDRESS	CITY	STATE & ZIP CODE/COUNTRY
203	FULL NAME OF INVENTOR	FAMILY NAME	FIRST GIVEN NAME	SECOND GIVEN NAME
	RESIDENCE & CITIZENSHIP	CITY	STATE OR COUNTRY	COUNTRY OF CITIZENSHIP
	MAILING ADDRESS	MAILING ADDRESS	CITY	STATE & ZIP CODE/COUNTRY

I hereby declare that all statements made herein of my own knowledge are true and that all statements made on information and belief are believed to be true; and further that these statements were made with the knowledge that willful false statements and the like so made are punishable by fine or imprisonment, or both, under Section 1001 of Title 18 of the United States Code and that such willful false statements may jeopardize the validity of the application or any patent issuing thereon.

SIGNATURE OF INVENTOR 201	SIGNATURE OF INVENTOR 202	SIGNATURE OF INVENTOR 203
DATE 3/8/04	DATE	DATE

{00001064;}

APPLICATION DATA SHEET

(1) Inventor Information

Inventor One Given name:	KOVARIK
Family name:	Vincent Joseph
Name Suffix:	Jr.
Residence:	Grant, FL
Mailing Address:	4497 Pinewood Road, Melbourne, FL 32934-9018
Citizenship:	US

(2) Correspondence Information

Correspondence Address ***39207***

(3) Application Information

Title : ENFORCING COMPUTER SECURITY UTILIZING AN ADAPTIVE LATTICE MECHANISM

Total No. of Drawing Sheets	:	10
Suggested Figure for Publication	:	1
Docket Number	:	7162-0110
Type of Application	:	Utility

(4) Representative Information

Representative Information: ***39207***

Robert J. Sacco
Registration No. 35,667
Sacco & Associates, P.A.
P.O. Box 30999
Palm Beach Gardens, FL 33420-0999
Telephone: (561) 626-2222
Facsimile: (561)626-2681

(5) Domestic Priority Information

(6) Foreign Application Information

(7) Assignee Information

Assignee name	:	Harris Corporation
Assignee address	:	1025 West NASA Boulevard, Melbourne, FL 32919

PATENT

IN THE UNITED STATES PATENT AND TRADEMARK OFFICE

Application No.	:	Filed herewith	Confirmation No.
Applicant	:	KOVARIK, JR.	
Filed	:	Filed herewith	
TC/A.U.	:		
Examiner	:		
Docket No.	:	7162-0110	
Customer No.	:	39207	

INFORMATION DISCLOSURE STATEMENT
PURSUANT TO 37 CFR 1.97

Mail Stop: Patent Applications
Commissioner for Patents
P.O. Box 1450
Alexandria, VA 22313-1450

Sir:

This Information Disclosure Statement is being submitted in compliance with 37 CFR 1.97 and 1.98. A list of documents on form PTO 1449 together with a concise explanation or a translation of each non-English language document is enclosed herewith.

This paper is submitted in accordance with 37 CFR 1.97(b) and a fee is not required for consideration of these documents. Please charge any deficiencies to Deposit Acct. No. 50-2884.

Respectfully submitted,

Date: 3/11/04

Robert J. Sacco
Registration No. 35,667
SACCO & ASSOCIATES, P.A.
Post Office Box 30999
Palm Beach Gardens, FL 33420-0999
561/626-2222

{00001273;}

Express Mail Label:
EV 417207036 US

PTO/SB/08A (02-03)
Approved for use through 04/30/2003. OMB 0651-0031
U.S. Patent and Trademark Office; U.S. DEPARTMENT OF COMMERCE
Under the Paperwork Reduction Act of 1995, no persons are required to respond to a collection of information unless it contains a valid OMB control number.

Substitute for form 1449/PTO

INFORMATION DISCLOSURE STATEMENT BY APPLICANT

(Use as many sheets as necessary)

Sheet 1 of 1

Complete if Known	
Application Number	
Filing Date	
First Named Inventor	KOVARIK
Art Unit	
Examiner Name	
Attorney Docket Number	7162-0110

U. S. PATENT DOCUMENTS

Examiner Initials*	Cite No.[1]	Document Number Number-Kind Code[2] (if known)	Publication Date MM-DD-YYYY	Name of Patentee or Applicant of Cited Document	Pages, Columns, Lines, Where Relevant Passages or Relevant Figures Appear
		US- 6,334,121	12/25/2001	Primeaux, et al.	
		US- 6,345,361	02/05/2002	Jerger, et al.	
		US- 6,405,202	06/11/2002	Britton, et al.	
		US- 6,408,391	06/18/2002	Huff, et al.	
		US- 6,446,206	09/03/2002	Feldbaum	
		US- 6,446,077	09/03/2002	Straube, et al.	
		US- 6,453,418	09/17/2002	Ooki, et al.	
		US-			
		US-			
		US-			
		US-			
		US-			
		US-			
		US-			
		US-			
		US-			
		US-			
		US-			
		US-			

FOREIGN PATENT DOCUMENTS

Examiner Initials*	Cite No.[1]	Foreign Patent Document Country Code[3]-Number[4]-Kind Code[5] (if known)	Publication Date MM-DD-YYYY	Name of Patentee or Applicant of Cited Document	Pages, Columns, Lines, Where Relevant Passages Or Relevant Figures Appear	T[6]

Examiner Signature		Date Considered	

*EXAMINER: Initial if reference considered, whether or not citation is in conformance with MPEP 609. Draw line through citation if not in conformance and not considered. Include copy of this form with next communication to applicant. [1] Applicant's unique citation designation number (optional). [2] See Kinds Codes of USPTO Patent Documents at www.uspto.gov or MPEP 901.04. [3] Enter Office that issued the document, by the two-letter code (WIPO Standard ST.3). [4] For Japanese patent documents, the indication of the year of the reign of the Emperor must precede the serial number of the patent document. [5] Kind of document by the appropriate symbols as indicated on the document under WIPO Standard ST. 16 if possible. [6] Applicant is to place a check mark here if English language Translation is attached.

This collection of information is required by 37 CFR 1.97 and 1.98. The information is required to obtain or retain a benefit by the public which is to file (and by the USPTO to process) an application. Confidentiality is governed by 35 U.S.C. 122 and 37 CFR 1.14. This collection is estimated to take 2 hours to complete, including gathering, preparing, and submitting the completed application form to the USPTO. Time will vary depending upon the individual case. Any comments on the amount of time you require to complete this form and/or suggestions for reducing this burden, should be sent to the Chief Information Officer, U.S. Patent and Trademark Office, U.S. Department of Commerce, Washington, DC 20231. DO NOT SEND FEES OR COMPLETED FORMS TO THIS ADDRESS. **SEND TO: Commissioner for Patents, Washington, DC 20231.**

If you need assistance in completing the form, call 1-800-PTO-9199 (1-800-786-9199) and select option 2.

Express Mail Label:
EV 417207036 US

PATENT APPLICATION SERIAL NO. _____

U.S. DEPARTMENT OF COMMERCE
PATENT AND TRADEMARK OFFICE
FEE RECORD SHEET

03/15/2004 EFLORES 00000030 10798074
01 FC:1001 770.00 OP

PTO-1556
(5/87)

*U.S. Government Printing Office: 2001 — 481-697/59173

PATENT APPLICATION FEE DETERMINATION RECORD
Effective October 1, 2003

Application or Docket Number

CLAIMS AS FILED - PART I

	(Column 1)	(Column 2)
TOTAL CLAIMS	19	
FOR	NUMBER FILED	NUMBER EXTRA
TOTAL CHARGEABLE CLAIMS	19 minus 20=	*
INDEPENDENT CLAIMS	3 minus 3 =	*
MULTIPLE DEPENDENT CLAIM PRESENT		☐

* If the difference in column 1 is less than zero, enter "0" in column 2

SMALL ENTITY TYPE ☐		OR	OTHER THAN SMALL ENTITY	
RATE	FEE		RATE	FEE
BASIC FEE	385.00	OR	BASIC FEE	770.00
X$ 9=		OR	X$18=	
X43=		OR	X86=	
+145=		OR	+290=	
TOTAL		OR	TOTAL	770

CLAIMS AS AMENDED - PART II

AMENDMENT A

	(Column 1)		(Column 2)	(Column 3)
	CLAIMS REMAINING AFTER AMENDMENT		HIGHEST NUMBER PREVIOUSLY PAID FOR	PRESENT EXTRA
Total	*	Minus	**	=
Independent	*	Minus	***	=
FIRST PRESENTATION OF MULTIPLE DEPENDENT CLAIM				☐

1 - 10 -11

SMALL ENTITY		OR	OTHER THAN SMALL ENTITY	
RATE	ADDI-TIONAL FEE		RATE	ADDI-TIONAL FEE
X$ 9=		OR	X$18=	
X43=		OR	X86=	
+145=		OR	+290=	
TOTAL ADDIT. FEE		OR	TOTAL ADDIT. FEE	

AMENDMENT B

	(Column 1)		(Column 2)	(Column 3)
	CLAIMS REMAINING AFTER AMENDMENT		HIGHEST NUMBER PREVIOUSLY PAID FOR	PRESENT EXTRA
Total	*	Minus	**	=
Independent	*	Minus	***	=
FIRST PRESENTATION OF MULTIPLE DEPENDENT CLAIM				☐

RATE	ADDI-TIONAL FEE		RATE	ADDI-TIONAL FEE
X$ 9=		OR	X$18=	
X43=		OR	X86=	
+145=		OR	+290=	
TOTAL ADDIT. FEE		OR	TOTAL ADDIT. FEE	

AMENDMENT C

	(Column 1)		(Column 2)	(Column 3)
	CLAIMS REMAINING AFTER AMENDMENT		HIGHEST NUMBER PREVIOUSLY PAID FOR	PRESENT EXTRA
Total	*	Minus	**	=
Independent	*	Minus	***	=
FIRST PRESENTATION OF MULTIPLE DEPENDENT CLAIM				☐

RATE	ADDI-TIONAL FEE		RATE	ADDI-TIONAL FEE
X$ 9=		OR	X$18=	
X43=		OR	X86=	
+145=		OR	+290=	
TOTAL ADDIT. FEE		OR	TOTAL ADDIT. FEE	

* If the entry in column 1 is less than the entry in column 2, write "0" in column 3.
** If the "Highest Number Previously Paid For" IN THIS SPACE is less than 20, enter "20."
***If the "Highest Number Previously Paid For" IN THIS SPACE is less than 3, enter "3."
The "Highest Number Previously Paid For" (Total or Independent) is the highest number found in the appropriate box in column 1.

PTO/SB/05 (08-03)
Approved for use through 07/31/2006. OMB 0651-0032
U.S. Patent and Trademark Office. U.S. DEPARTMENT OF COMMERCE
Under the Paperwork Reduction Act of 1995, no persons are required to respond to a collection of information unless it displays a valid OMB control number.

UTILITY PATENT APPLICATION TRANSMITTAL

(Only for new nonprovisional applications under 37 CFR 1.53(b))

Attorney Docket No.	7162-0110
First Inventor	KOVARIK, JR.
Title	Enforcing Computer Security Utilizing an Adaptive Lattice Mechanism
Express Mail Label No.	EV 417207036 US

APPLICATION ELEMENTS

See MPEP chapter 600 concerning utility patent application contents.

ADDRESS TO: **Mail Stop Patent Application**
Commissioner for Patents
P.O. Box 1450
Alexandria VA 22313-1450

1. ☑ Fee Transmittal Form (e.g., PTO/SB/17)
   (Submit an original and a duplicate for fee processing)
2. ☐ Applicant claims small entity status. See 37 CFR 1.27.
3. ☑ Specification [*Total Pages* 23]
   (preferred arrangement set forth below)
   - Descriptive title of the invention
   - Cross Reference to Related Applications
   - Statement Regarding Fed sponsored R & D
   - Reference to sequence listing, a table, or a computer program listing appendix
   - Background of the Invention
   - Brief Summary of the Invention
   - Brief Description of the Drawings *(if filed)*
   - Detailed Description
   - Claim(s)
   - Abstract of the Disclosure
4. ☑ Drawing(s) (*35 U.S.C. 113*) [*Total Sheets* 10]
5. Oath or Declaration [*Total Sheets* 2]
   a. ☑ Newly executed (original or copy)
   b. ☐ Copy from a prior application (37 CFR 1.63(d))
   (for continuation/divisional with Box 18 completed)
      i. ☐ DELETION OF INVENTOR(S)
      Signed statement attached deleting inventor(s) name in the prior application, see 37 CFR 1.63(d)(2) and 1.33(b).
6. ☑ Application Data Sheet. See 37 CFR 1.76
7. ☐ CD-ROM or CD-R in duplicate, large table or Computer Program *(Appendix)*
8. Nucleotide and/or Amino Acid Sequence Submission *(if applicable, all necessary)*
   a. ☐ Computer Readable Form (CRF)
   b. Specification Sequence Listing on:
      i. ☐ CD-ROM or CD-R (2 copies); or
      ii. ☐ Paper
   c. ☐ Statements verifying identity of above copies

ACCOMPANYING APPLICATION PARTS

9. ☑ Assignment Papers (cover sheet & document(s))
10. ☐ 37 CFR 3.73(b) Statement *(when there is an assignee)* ☐ Power of Attorney
11. ☐ English Translation Document *(if applicable)*
12. ☑ Information Disclosure Statement (IDS)/PTO-1449 ☐ Copies of IDS Citations
13. ☐ Preliminary Amendment
14. ☑ Return Receipt Postcard (MPEP 503) *(Should be specifically itemized)*
15. ☐ Certified Copy of Priority Document(s) *(if foreign priority is claimed)*
16. ☐ Nonpublication Request under 35 U.S.C. 122 (b)(2)(B)(i). Applicant must attach form PTO/SB/35 or its equivalent.
17. ☑ Other: Fee: $810

18. If a CONTINUING APPLICATION, *check appropriate box, and supply the requisite information below and in the first sentence of the specification following the title, or in an Application Data Sheet under 37 CFR 1.76:*

☐ Continuation ☐ Divisional ☐ Continuation-in-part (CIP) of prior application No.: .....

Prior application information: *Examiner* _____ *Art Unit:* _____

For CONTINUATION OF DIVISIONAL APPS only; The entire disclosure of the prior application, from which an oath or declaration is supplied under Box 5b, is considered a part of the disclosure of the accompanying continuation or divisional application and is hereby incorporated by reference. The incorporation can only be relied upon when a portion has been inadvertently omitted from the submitted application parts.

19. CORRESPONDENCE ADDRESS

☑ Customer Number: 39207 *OR* ☐ Correspondence address below

Name					
Address					
City		*State*		*Zip Code*	
Country		*Telephone*		*Fax*	

Name (Print/Type)	Robert J. Sacco	*Registration No. (Attorney/Agent)*	35,667
Signature		*Date*	3/11/04

This collection of information is required by 37 CFR 1.53(b). The information is required to obtain or retain a benefit by the public which is to file (and by the USPTO to process) an application. Confidentiality is governed by 35 U.S.C. 122 and 37 CFR 1.14. This collection is estimated to take 12 minutes to complete, including gathering, preparing, and submitting the completed application form to the USPTO. Time will vary depending upon the individual case. Any comments on the amount of time you require to complete this form and/or suggestions for reducing this burden, should be sent to the Chief Information Officer, U.S. Patent and Trademark Office, U.S. Department of Commerce, P.O. Box 1450, Alexandria, VA 22313-1450. DO NOT SEND FEES OR COMPLETED FORMS TO THIS ADDRESS. **SEND TO: Mail Stop Patent Application, Commissioner for Patents, P.O. Box 1450, Alexandria, VA 22313-1450.**
If you need assistance in completing the form, call 1-800-PTO-9199 and select option 2.

1749 U.S. PTO
10/798074
031104

18351 U.S.PTO
031104

PTO/SB/17 (10-03)
Approved for use through 07/31/2006. OMB 0651-0032
U.S. Patent and Trademark Office; U.S. DEPARTMENT OF COMMERCE
Under the Paperwork Reduction Act of 1995, no persons are required to respond to a collection of information unless it displays a valid OMB control number.

FEE TRANSMITTAL for FY 2004

Effective 10/01/2003. Patent fees are subject to annual revision.

☐ Applicant claims small entity status. See 37 CFR 1.27

TOTAL AMOUNT OF PAYMENT ($) 810

Complete if Known	
Application Number	
Filing Date	
First Named Inventor	KOVARIK, JR.
Examiner Name	
Art Unit	
Attorney Docket No.	7162-0110

METHOD OF PAYMENT *(check all that apply)*

☑ Check ☐ Credit card ☐ Money Order ☐ Other ☐ None

☑ Deposit Account:

Deposit Account Number: 50-2884

Deposit Account Name: Sacco & Associates, P.A.

The Director is authorized to: *(check all that apply)*

☐ Charge fee(s) indicated below ☑ Credit any overpayments

☑ Charge any additional fee(s) or any underpayment of fee(s)

☐ Charge fee(s) indicated below, **except for the filing fee** to the above-identified deposit account.

FEE CALCULATION

1. BASIC FILING FEE

Large Entity Fee Code	Large Entity Fee ($)	Small Entity Fee Code	Small Entity Fee ($)	Fee Description	Fee Paid
1001	770	2001	385	Utility filing fee	770
1002	340	2002	170	Design filing fee	
1003	530	2003	265	Plant filing fee	
1004	770	2004	385	Reissue filing fee	
1005	160	2005	80	Provisional filing fee	

SUBTOTAL (1) ($) 770

2. EXTRA CLAIM FEES FOR UTILITY AND REISSUE

	Extra Claims		Fee from below		Fee Paid
Total Claims		-20** =		X	=
Independent Claims		- 3** =		X	=
Multiple Dependent					=

Large Entity Fee Code	Large Entity Fee ($)	Small Entity Fee Code	Small Entity Fee ($)	Fee Description
1202	18	2202	9	Claims in excess of 20
1201	86	2201	43	Independent claims in excess of 3
1203	290	2203	145	Multiple dependent claim, if not paid
1204	86	2204	43	** Reissue independent claims over original patent
1205	18	2205	9	** Reissue claims in excess of 20 and over original patent

SUBTOTAL (2) ($)

***or number previously paid, if greater; For Reissues, see above*

FEE CALCULATION (continued)

3. ADDITIONAL FEES

Large Entity Fee Code	Large Entity Fee ($)	Small Entity Fee Code	Small Entity Fee ($)	Fee Description	Fee Paid
1051	130	2051	65	Surcharge - late filing fee or oath	
1052	50	2052	25	Surcharge - late provisional filing fee or cover sheet	
1053	130	1053	130	Non-English specification	
1812	2,520	1812	2,520	For filing a request for *ex parte* reexamination	
1804	920*	1804	920*	Requesting publication of SIR prior to Examiner action	
1805	1,840*	1805	1,840*	Requesting publication of SIR after Examiner action	
1251	110	2251	55	Extension for reply within first month	
1252	420	2252	210	Extension for reply within second month	
1253	950	2253	475	Extension for reply within third month	
1254	1,480	2254	740	Extension for reply within fourth month	
1255	2,010	2255	1,005	Extension for reply within fifth month	
1401	330	2401	165	Notice of Appeal	
1402	330	2402	165	Filing a brief in support of an appeal	
1403	290	2403	145	Request for oral hearing	
1451	1,510	1451	1,510	Petition to institute a public use proceeding	
1452	110	2452	55	Petition to revive - unavoidable	
1453	1,330	2453	665	Petition to revive - unintentional	
1501	1,330	2501	665	Utility issue fee (or reissue)	
1502	480	2502	240	Design issue fee	
1503	640	2503	320	Plant issue fee	
1460	130	1460	130	Petitions to the Commissioner	
1807	50	1807	50	Processing fee under 37 CFR 1.17(q)	
1806	180	1806	180	Submission of Information Disclosure Stmt	
8021	40	8021	40	Recording each patent assignment per property (times number of properties)	40
1809	770	2809	385	Filing a submission after final rejection (37 CFR 1.129(a))	
1810	770	2810	385	For each additional invention to be examined (37 CFR 1.129(b))	
1801	770	2801	385	Request for Continued Examination (RCE)	
1802	900	1802	900	Request for expedited examination of a design application	

Other fee (specify) _____

*Reduced by Basic Filing Fee Paid

SUBTOTAL (3) ($) 40

SUBMITTED BY				(Complete *(if applicable)*)	
Name (Print/Type)	ROBERT J. SACCO	*Registration No. (Attorney/Agent)*	35,667	*Telephone*	562-626-2222
Signature				*Date*	3/11/04

WARNING: Information on this form may become public. Credit card information should not be included on this form. Provide credit card information and authorization on PTO-2038.

This collection of information is required by 37 CFR 1.17 and 1.27. The information is required to obtain or retain a benefit by the public which is to file (and by the USPTO to process) an application. Confidentiality is governed by 35 U.S.C. 122 and 37 CFR 1.14. This collection is estimated to take 12 minutes to complete, including gathering, preparing, and submitting the completed application form to the USPTO. Time will vary depending upon the individual case. Any comments on the amount of time you require to complete this form and/or suggestions for reducing this burden, should be sent to the Chief Information Officer, U.S. Patent and Trademark Office, U.S. Department of Commerce, P.O. Box 1450, Alexandria, VA 22313-1450. DO NOT SEND FEES OR COMPLETED FORMS TO THIS ADDRESS. **SEND TO: Commissioner for Patents, P.O. Box 1450, Alexandria, VA 22313-1450.**

If you need assistance in completing the form, call 1-800-PTO-9199 and select option 2.

Express Mail Label: EV 417207036 US