US011465830B2

(12) **United States Patent**
Krüger

(10) **Patent No.: US 11,465,830 B2**
(45) **Date of Patent: *Oct. 11, 2022**

(54) **PORTION CAPSULE HAVING AN IDENTIFIER**

(71) Applicant: **K-FEE SYSTEM GMBH**, Bergisch Gladbach (DE)

(72) Inventor: **Marc Krüger**, Bergisch Gladbach (DE)

(73) Assignee: **K-FEE SYSTEM GMBH**, Bergisch Gladbach (DE)

(*) Notice: Subject to any disclaimer, the term of this patent is extended or adjusted under 35 U.S.C. 154(b) by 0 days.

This patent is subject to a terminal disclaimer.

(21) Appl. No.: **17/670,765**

(22) Filed: **Feb. 14, 2022**

(65) **Prior Publication Data**

US 2022/0161992 A1 May 26, 2022

Related U.S. Application Data

(60) Continuation of application No. 17/670,629, filed on Feb. 14, 2022, which is a continuation of application
(Continued)

(30) **Foreign Application Priority Data**

Jul. 22, 2010	(DE)	10 2010 031 988
Sep. 2, 2010	(DE)	10 2010 044 251
Feb. 7, 2011	(DE)	10 2011 010 534

(51) **Int. Cl.**
B65D 85/804 (2006.01)
A47J 31/44 (2006.01)
(Continued)

(52) **U.S. Cl.**
CPC ***B65D 85/8061*** (2020.05); ***A47J 31/3628*** (2013.01); ***A47J 31/3638*** (2013.01);
(Continued)

(58) **Field of Classification Search**
CPC B65D 85/8043; B65D 65/466; B65D 2203/06; B65D 2203/10; A47J 31/4492
(Continued)

(56) **References Cited**

U.S. PATENT DOCUMENTS

726,793	A	4/1903	Bezzera
2,778,739	A	1/1957	Rodth

(Continued)

FOREIGN PATENT DOCUMENTS

CA	2436389	A1	8/2002
CA	2327021	C	1/2005

(Continued)

OTHER PUBLICATIONS

Rawle, Alan, "Particle Sizing—An Introduction" 2012; Silver Colloids, Edition or volume on Colloidal Silver.

(Continued)

Primary Examiner — Jimmy Chou
(74) *Attorney, Agent, or Firm* — The Dobrusin Law Firm, P.C.

(57) **ABSTRACT**

A portion capsule for producing a beverage includes a base element having a cavity in which a beverage raw material is provided and which is closed by a membrane fastened to the base element.

12 Claims, 12 Drawing Sheets

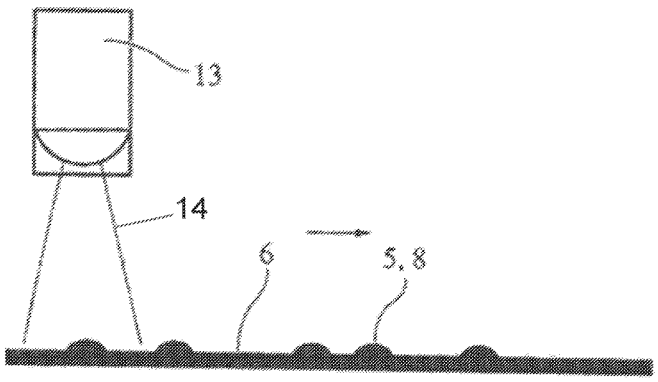

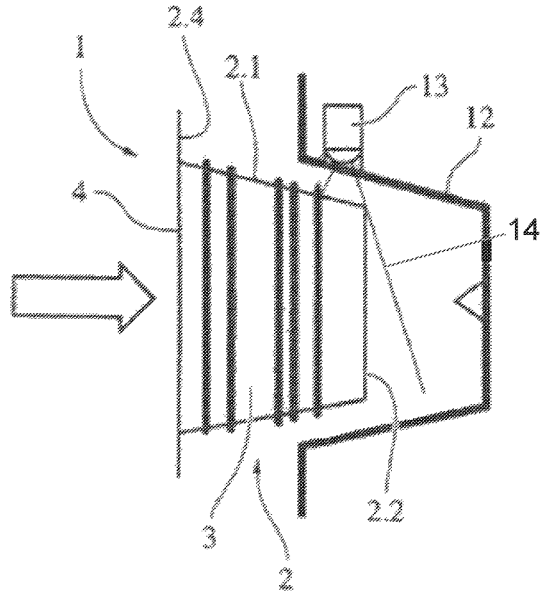

Related U.S. Application Data

No. 17/547,363, filed on Dec. 10, 2021, which is a continuation of application No. 15/646,980, filed on Jul. 11, 2017, which is a division of application No. 15/211,823, filed on Jul. 15, 2016, now abandoned, which is a division of application No. 13/744,623, filed on Jan. 18, 2013, now abandoned, which is a continuation of application No. PCT/EP2011/003677, filed on Jul. 22, 2011.

(51) **Int. Cl.**
A47J 31/40 (2006.01)
A47J 31/36 (2006.01)
B65D 65/46 (2006.01)

(52) **U.S. Cl.**
CPC ***A47J 31/407*** (2013.01); ***A47J 31/4492*** (2013.01); ***B65D 85/8043*** (2013.01); ***B65D 85/8058*** (2020.05); *B65D 65/466* (2013.01); *B65D 2203/06* (2013.01); *B65D 2203/10* (2013.01)

(58) **Field of Classification Search**
USPC ..... 99/286, 289 R, 295, 302 R, 307, 323
See application file for complete search history.

(56) **References Cited**

U.S. PATENT DOCUMENTS

3,183,096 A 5/1965 Hiscock
3,387,553 A 6/1968 Tavera
3,437,253 A 4/1969 Davis et al.
3,501,896 A 3/1970 Stoeser et al.
3,521,207 A 7/1970 Britton et al.
3,631,793 A 1/1972 Bednartz
3,640,727 A 2/1972 Heusinkveld
3,744,026 A 7/1973 Wolff
4,136,202 A 1/1979 Favre
4,389,925 A 6/1983 Ana
4,534,985 A 8/1985 Gasau
4,540,595 A 9/1985 Acitelli et al.
4,644,151 A 5/1987 Piet
4,676,482 A 11/1987 Marvin et al.
4,742,645 A 5/1988 Johnston
4,846,052 A 7/1989 Farve et al.
4,859,337 A 8/1989 Woltermann
4,860,645 A 8/1989 Van Der Lijn et al.
4,867,993 A 9/1989 Nordskog
4,976,179 A 12/1990 Lacrouts-Cazenave
5,012,629 A 5/1991 Rehman et al.
5,028,769 A 7/1991 Claypool et al.
5,108,768 A 4/1992 So
5,194,553 A 3/1993 Freeburne et al.
5,242,702 A 9/1993 Fond
5,243,164 A 9/1993 Erickson et al.
5,251,758 A 10/1993 Kolacek
5,261,558 A 11/1993 Claydon
5,285,041 A 2/1994 Wright
5,325,765 A 7/1994 Sylvan et al.
5,402,707 A 4/1995 Fond et al.
5,460,078 A 10/1995 Weller
5,496,573 A 3/1996 Tsuji et al.
5,501,945 A 3/1996 Kanakkanatt
5,535,765 A 7/1996 Takashima
5,601,716 A 2/1997 Heinrich et al.
5,637,850 A 6/1997 Honda
5,656,311 A 8/1997 Fond
5,656,316 A 8/1997 Fond et al.
5,656,318 A 8/1997 Fond et al.
5,677,522 A 10/1997 Rice et al.
5,725,261 A 3/1998 Rahn
5,840,189 A 11/1998 Sylvan et al.
5,888,549 A 3/1999 Buchholz et al.
5,895,672 A 4/1999 Cooper
5,897,899 A 4/1999 Fond
5,917,165 A 6/1999 Platt et al.
5,941,055 A 8/1999 Coates
5,948,455 A 9/1999 Schaeffer et al.
5,980,743 A 11/1999 Bairischer
5,994,677 A 11/1999 Akerlind
6,025,000 A 2/2000 Fond et al.
6,079,315 A 6/2000 Beaulieu et al.
6,142,063 A 11/2000 Beaulieu et al.
6,153,026 A 11/2000 Michotte
6,199,780 B1 3/2001 Görlitz
6,202,929 B1 3/2001 Verschuur et al.
6,213,326 B1 4/2001 Denner et al.
6,299,926 B1 10/2001 Balakrishnan et al.
6,440,256 B1 8/2002 Gordon et al.
6,451,332 B1 9/2002 Tanaka et al.
6,527,181 B1 3/2003 Kleeberg et al.
6,589,577 B2 7/2003 Lazaris et al.
6,598,800 B1 7/2003 Schmit et al.
6,607,762 B2 8/2003 Lazaris et al.
6,627,244 B2 9/2003 Omura
6,645,537 B2 11/2003 Sweeney et al.
6,655,260 B2 12/2003 Lazaris
6,817,538 B2 11/2004 Afzali-Ardakani et al.
6,861,086 B2 3/2005 Buckingham et al.
6,948,420 B2 9/2005 Kirschner et al.
6,994,879 B2 2/2006 Cirigliano et al.
7,408,094 B2 8/2008 Little et al.
7,412,921 B2 8/2008 Hu et al.
7,444,925 B2 11/2008 Mahlich
7,461,584 B2 * 12/2008 Blanc ..... A47J 31/3633 99/289 R
7,464,518 B2 12/2008 Ansinn
7,543,527 B2 6/2009 Schmed
7,552,672 B2 6/2009 Schmed
7,595,870 B2 9/2009 Ringlien
7,673,558 B2 3/2010 Panesar et al.
7,685,930 B2 3/2010 Mandralis et al.
7,815,953 B2 10/2010 Mastropasqua et al.
7,856,920 B2 * 12/2010 Schmed A47J 31/4496 99/305
7,935,646 B2 5/2011 Viazmensky et al.
7,946,217 B2 5/2011 Favre et al.
7,981,451 B2 7/2011 Ozanne
8,039,029 B2 10/2011 Ozanne
8,039,034 B2 10/2011 Ozanne
8,087,347 B2 1/2012 Halliday et al.
8,088,423 B2 1/2012 Ohresser et al.
8,101,928 B2 1/2012 Hill et al.
8,109,200 B2 2/2012 Hansen
8,114,461 B2 2/2012 Perlman et al.
8,163,318 B2 4/2012 Ozanne et al.
8,168,908 B2 5/2012 Heimann
8,257,766 B2 9/2012 Yoakim et al.
8,276,639 B2 10/2012 Binacchi
8,307,754 B2 11/2012 Ternite et al.
8,361,527 B2 1/2013 Winkler et al.
8,474,368 B2 7/2013 Kilber et al.
8,491,948 B2 7/2013 Ozanne et al.
8,491,976 B2 7/2013 Sato et al.
8,505,440 B2 8/2013 Kirschner et al.
8,512,886 B2 8/2013 Ozanne
8,695,484 B2 4/2014 Mori
8,734,881 B2 5/2014 Yoakim et al.
8,747,775 B2 6/2014 Sandvick
8,794,125 B1 8/2014 Rivera
8,868,232 B2 10/2014 Freudelsperger
8,906,436 B2 12/2014 Nowak
8,916,220 B2 12/2014 Mahlich et al.
8,956,672 B2 2/2015 Yoakim et al.
9,049,958 B2 6/2015 Fischer
D734,665 S 7/2015 Cahen et al.
9,072,402 B2 7/2015 Ryser
9,079,705 B2 7/2015 Digiuni
9,150,347 B2 10/2015 Scheiber
9,204,751 B2 12/2015 Peterson
9,216,854 B2 12/2015 Schreiber
9,227,837 B2 1/2016 Reinmuth
9,271,602 B2 3/2016 Beaulieu et al.

(56) **References Cited**

U.S. PATENT DOCUMENTS

9,290,317 B2 3/2016 Quinn et al.
9,295,278 B2 3/2016 Nowak
9,320,385 B2 4/2016 Spiegel et al.
9,357,791 B2 6/2016 Fountain et al.
9,359,126 B2 6/2016 Wong et al.
9,359,128 B2 6/2016 Mahlich
9,392,902 B2 7/2016 Parentes et al.
9,394,101 B2 7/2016 Empl
9,409,703 B2 8/2016 Krüger et al.
9,409,704 B2 8/2016 Digiuni et al.
9,415,931 B2 8/2016 Gerbaulet et al.
9,428,328 B2 8/2016 Trombetta et al.
9,428,329 B2 8/2016 Trombetta et al.
9,434,525 B2 9/2016 Fabozzi et al.
9,486,108 B1 11/2016 Douglas et al.
9,676,538 B2 6/2017 Evers et al.
9,708,086 B2 7/2017 Bianchi
9,756,974 B2 * 9/2017 Rivera A47J 31/06
9,770,129 B2 9/2017 Remo et al.
9,808,112 B2 11/2017 Favero et al.
9,969,564 B2 5/2018 Krüger
2001/0038204 A1 11/2001 Nojima et al.
2001/0047724 A1 12/2001 Lazaris
2001/0048957 A1 12/2001 Lazaris et al.
2002/0020659 A1 2/2002 Sweeney
2002/0048621 A1 4/2002 Boyd et al.
2002/0078831 A1 6/2002 Cai
2002/0085164 A1 7/2002 Stanford-Clark
2002/0088807 A1 7/2002 Perkovic et al.
2002/0110626 A1 8/2002 Buckingham et al.
2002/0144603 A1 * 10/2002 Taylor A47J 31/32 99/295
2002/0148356 A1 10/2002 Lazaris et al.
2003/0005826 A1 1/2003 Sargent et al.
2003/0033938 A1 2/2003 Halliday et al.
2003/0039731 A1 2/2003 Dalton et al.
2003/0121979 A1 7/2003 Haens et al.
2003/0172813 A1 9/2003 Schifferle
2003/0222089 A1 12/2003 Hale
2004/0005384 A1 1/2004 Cai
2004/0045443 A1 3/2004 Lazaris et al.
2004/0089158 A1 5/2004 Mahlich
2004/0089602 A1 5/2004 Heinrich et al.
2004/0112222 A1 6/2004 Fischer
2004/0115310 A1 6/2004 Yoakim et al.
2004/0118295 A1 6/2004 Angeles
2004/0142070 A1 7/2004 Haen
2004/0155113 A1 8/2004 Urano et al.
2004/0182250 A1 9/2004 Halliday et al.
2004/0188459 A1 9/2004 Halliday et al.
2005/0016383 A1 1/2005 Kirschner et al.
2005/0045566 A1 3/2005 Larkin et al.
2005/0051478 A1 3/2005 Karanikos et al.
2005/0061478 A1 3/2005 Huang
2005/0150391 A1 * 7/2005 Schifferle A47J 31/0673 99/295
2005/0160919 A1 7/2005 Balkau
2005/0183581 A1 8/2005 Kirschner et al.
2005/0266122 A1 12/2005 Franceschi
2006/0010744 A1 1/2006 Schumacher
2006/0032427 A1 2/2006 Ishii et al.
2006/0084344 A1 4/2006 Bonneh
2006/0107841 A1 5/2006 Schifferle
2006/0194004 A1 8/2006 Niemoller et al.
2006/0228447 A1 10/2006 Ganesan et al.
2006/0230941 A1 10/2006 Ryser et al.
2006/0233921 A1 10/2006 Mock et al.
2006/0236871 A1 10/2006 Ternite et al.
2007/0144355 A1 6/2007 Denisart et al.
2007/0148290 A1 6/2007 Ternite et al.
2007/0157821 A1 7/2007 Panesar et al.
2007/0181005 A1 8/2007 Kirschner et al.
2007/0181412 A1 8/2007 Raunig
2007/0203587 A1 8/2007 Erlandsson et al.
2007/0257118 A1 11/2007 Riley et al.
2008/0024536 A1 1/2008 Hirano et al.
2008/0026121 A1 1/2008 Mastropasqua et al.
2008/0028946 A1 2/2008 Kirschner et al.
2008/0038441 A1 2/2008 Kirschner
2008/0085356 A1 4/2008 Colliver et al.
2008/0105131 A1 5/2008 Castellani
2008/0116105 A1 5/2008 Statham
2008/0148948 A1 6/2008 Evers et al.
2008/0187638 A1 8/2008 Hansen
2008/0245236 A1 10/2008 Ternite et al.
2008/0299262 A1 12/2008 Reati
2008/0302251 A1 12/2008 Rijskamp et al.
2009/0004343 A1 1/2009 Xiong et al.
2009/0007793 A1 1/2009 Glucksman et al.
2009/0007796 A1 1/2009 Maddalena Ricotti
2009/0092711 A1 4/2009 Ninh et al.
2009/0126577 A1 5/2009 Ternite
2009/0136626 A1 5/2009 Mueller
2009/0205747 A1 8/2009 Lillard, Jr.
2009/0211458 A1 8/2009 Denisart et al.
2009/0211713 A1 8/2009 Binacchi
2009/0223375 A1 9/2009 Verbeek
2009/0249961 A1 10/2009 Cheng
2009/0289121 A1 11/2009 Maeda et al.
2009/0291379 A1 11/2009 Masaya Oota et al.
2009/0324788 A1 12/2009 Roy et al.
2009/0324791 A1 12/2009 Ohresser et al.
2010/0000667 A1 1/2010 Funnell
2010/0028495 A1 2/2010 Novak et al.
2010/0050880 A1 3/2010 Suter et al.
2010/0051532 A1 3/2010 Wawrla et al.
2010/0054532 A1 3/2010 Mitte et al.
2010/0072272 A1 3/2010 Angros
2010/0078480 A1 * 4/2010 Aker G06K 19/06009 235/494
2010/0108541 A1 5/2010 Roberto
2010/0129512 A1 * 5/2010 Accursi ..... A47J 31/407 99/302 R
2010/0132564 A1 6/2010 Ozanne et al.
2010/0147418 A1 6/2010 Piana
2010/0147872 A1 6/2010 Saxton et al.
2010/0172951 A1 7/2010 Wasielewski
2010/0181378 A1 7/2010 Hayakawa et al.
2010/0196545 A1 8/2010 Buffet et al.
2010/0239717 A1 9/2010 Yoakim et al.
2010/0239733 A1 9/2010 Yoakim et al.
2010/0239734 A1 9/2010 Yoakim et al.
2010/0260915 A1 10/2010 Young
2010/0263329 A1 10/2010 Nash
2010/0264640 A1 10/2010 Lane et al.
2010/0288131 A1 11/2010 Kilber et al.
2010/0288133 A1 11/2010 Litzka et al.
2010/0303964 A1 12/2010 Beaulieu et al.
2010/0308061 A1 12/2010 Loulourgas
2011/0005399 A1 1/2011 Epars et al.
2011/0008913 A1 1/2011 Wadhwa et al.
2011/0020500 A1 1/2011 Eichler et al.
2011/0033580 A1 2/2011 Biesheuvel et al.
2011/0041702 A1 2/2011 Yoakim
2011/0052761 A1 3/2011 Yoakim et al.
2011/0064852 A1 3/2011 Mann
2011/0076361 A1 3/2011 Peterson et al.
2011/0089135 A1 4/2011 Simon et al.
2011/0097450 A1 4/2011 Krüger
2011/0142996 A1 6/2011 Krüger
2011/0189350 A1 8/2011 Van Belleghem et al.
2011/0189362 A1 8/2011 Denisart et al.
2011/0212225 A1 9/2011 Mariller
2011/0250333 A1 10/2011 Ozanne
2011/0250812 A1 10/2011 Pourdeyhimi et al.
2011/0265659 A1 11/2011 Giua
2011/0303095 A1 12/2011 Fu et al.
2011/0308397 A1 12/2011 Sinot et al.
2012/0006685 A1 1/2012 Van Engelen
2012/0058226 A1 3/2012 Winkler et al.
2012/0060697 A1 3/2012 Ozanne
2012/0070542 A1 3/2012 Camera et al.
2012/0070543 A1 3/2012 Mahlich
2012/0070551 A1 3/2012 Mahlich

(56) **References Cited**

U.S. PATENT DOCUMENTS

2012/0097041 A1 4/2012 Bucher et al.
2012/0097602 A1 4/2012 Tedford
2012/0100264 A1 4/2012 Bucher et al.
2012/0121765 A1 5/2012 Kamerbeek et al.
2012/0123106 A1 5/2012 Joos
2012/0126834 A1 5/2012 Kleinhans
2012/0183657 A1 7/2012 Marina et al.
2012/0195155 A1 8/2012 Gennai et al.
2012/0201933 A1 8/2012 Dran et al.
2012/0207893 A1 8/2012 Krüger
2012/0207895 A1 8/2012 Rivera
2012/0251668 A1 10/2012 Wong et al.
2012/0251672 A1 10/2012 Kamerbeek et al.
2012/0258210 A1 10/2012 Wong et al.
2012/0269933 A1 10/2012 Rapparini
2012/0295234 A1 11/2012 Rognon et al.
2012/0308688 A1 12/2012 Peterson et al.
2013/0014648 A1 1/2013 Rognon et al.
2013/0055903 A1 3/2013 Deuber
2013/0059039 A1 3/2013 Trombetta et al.
2013/0064929 A1 3/2013 Jarisch et al.
2013/0064937 A1* 3/2013 Jarisch G06K 19/0614 426/112
2013/0084363 A1 4/2013 Krueger et al.
2013/0084376 A1 4/2013 Fischer et al.
2013/0099597 A1 4/2013 Perentes
2013/0101716 A1 4/2013 Beaulieu et al.
2013/0122153 A1 5/2013 Ferrier et al.
2013/0125762 A1 5/2013 Dogan et al.
2013/0129872 A1 5/2013 Krueger et al.
2013/0129876 A1 5/2013 Ye et al.
2013/0136828 A1 5/2013 Anghileri
2013/0149424 A1 6/2013 Fischer
2013/0156897 A1 6/2013 Goldstein
2013/0206011 A1 8/2013 Ozanne et al.
2013/0209610 A1 8/2013 Carder et al.
2013/0209618 A1 8/2013 Trombetta et al.
2013/0209619 A1 8/2013 Mahlich
2013/0209620 A1 8/2013 Ozanne et al.
2013/0209622 A1 8/2013 Fountain et al.
2013/0216663 A1 8/2013 Dogan et al.
2013/0230627 A1 9/2013 Hansen et al.
2013/0236609 A1* 9/2013 Magniet A47J 31/0642 426/87
2013/0243910 A1 9/2013 Krueger et al.
2013/0312619 A1 11/2013 Spiegel et al.
2013/0327223 A1 12/2013 Bartoli et al.
2014/0001563 A1 1/2014 Krueger et al.
2014/0004231 A1 1/2014 Norton et al.
2014/0017359 A1 1/2014 Krueger et al.
2014/0046126 A1 2/2014 Gilligan et al.
2014/0127364 A1 5/2014 Fu et al.
2014/0141128 A1 5/2014 Trombetta et al.
2014/0141129 A1 5/2014 Greene
2014/0161936 A1 6/2014 Trombetta et al.
2014/0178538 A1 6/2014 Husband et al.
2014/0196608 A1 7/2014 Amrein et al.
2014/0220191 A1 8/2014 Kelly et al.
2014/0224130 A1 8/2014 Castellani et al.
2014/0230370 A1 8/2014 Bianchi
2014/0242239 A1 8/2014 Boggavarapu
2014/0263033 A1 9/2014 Fu et al.
2014/0272018 A1 9/2014 Koller et al.
2014/0287104 A1 9/2014 Austin et al.
2014/0287105 A1* 9/2014 Husband B65D 85/8061 426/115
2014/0302204 A1 10/2014 Evers et al.
2014/0346022 A1 11/2014 Keller et al.
2014/0348984 A1 11/2014 Zeller et al.
2014/0370181 A1 12/2014 Young et al.
2015/0010680 A9 1/2015 Mahlich
2015/0017293 A1 1/2015 Carr et al.
2015/0020481 A1 1/2015 Hodler
2015/0029702 A1 1/2015 Foley
2015/0047509 A1 2/2015 Trombetta et al.
2015/0056331 A1 2/2015 Rivera
2015/0056340 A1 2/2015 Trombetta et al.
2015/0056351 A1 2/2015 Deuber
2015/0079241 A1 3/2015 Mahlich
2015/0119220 A1 4/2015 Rea et al.
2015/0128525 A1 5/2015 Bartoli et al.
2015/0132441 A1 5/2015 Accursi
2015/0157164 A1 6/2015 Digiuni
2015/0158665 A1 6/2015 Krueger et al.
2015/0158666 A1 6/2015 Krüger et al.
2015/0166204 A1 6/2015 Rea et al.
2015/0173558 A1 6/2015 Cross et al.
2015/0175347 A1 6/2015 Empl
2015/0201790 A1 7/2015 Smith et al.
2015/0225169 A1 8/2015 Jarisch
2015/0239652 A1 8/2015 Trombetta et al.
2015/0246741 A1 9/2015 Hansen et al.
2015/0274411 A1 10/2015 Krueger
2015/0297021 A1 10/2015 Bugnano et al.
2015/0297023 A1 10/2015 Hansen et al.
2015/0314954 A1 11/2015 Empl
2015/0329282 A1 11/2015 Bartoli et al.
2015/0353275 A1 12/2015 Accursi
2015/0368033 A1 12/2015 Krug et al.
2015/0375926 A1 12/2015 Fischer
2016/0001968 A1 1/2016 Krüger et al.
2016/0037961 A1 2/2016 Digiuni
2016/0045060 A1 2/2016 Flick
2016/0058234 A1 3/2016 Eppler et al.
2016/0066591 A1 3/2016 Halliday et al.
2016/0075506 A1 3/2016 Chapman et al.
2016/0130076 A1* 5/2016 Jarisch B65D 85/8058 426/87
2016/0174757 A1 6/2016 Rivera
2016/0194146 A1 7/2016 Schelch et al.
2016/0207696 A9 7/2016 Trombetta et al.
2016/0242594 A1 8/2016 Empl et al.
2016/0251150 A1 9/2016 Macchi et al.
2016/0325921 A1 11/2016 Empl
2016/0332759 A1 11/2016 Trombetta et al.
2016/0340110 A1 11/2016 Trombetta et al.
2017/0020329 A1 1/2017 Douglas et al.
2017/0027374 A1 2/2017 Smith et al.
2017/0071395 A1* 3/2017 Krüger B65D 85/8061
2017/0295988 A1 10/2017 Chung
2018/0325309 A1* 11/2018 Short A47J 31/60
2019/0055084 A1* 2/2019 D'Urso B65D 85/8052
2019/0359418 A1 11/2019 Kruger
2021/0086986 A1 5/2021 Krüger
2021/0269232 A1 9/2021 Krüger

FOREIGN PATENT DOCUMENTS

CA 2400033 C 2/2005
CA 2399290 C 1/2006
CA 2399283 C 5/2007
CA 2661921 A1 3/2008
CA 2763746 A1 3/2010
CA 2784752 C 6/2011
CA 2662071 C 7/2011
CA 2538256 C 8/2011
CA 2810237 A1 3/2012
CA 2531544 C 5/2012
CA 2662069 C 1/2013
CA 2785843 A1 2/2013
CA 2788283 A1 3/2013
CA 2866119 A1 9/2013
CA 2872667 A1 11/2013
CA 2874025 A1 12/2013
CA 2877090 A1 1/2014
CA 2886299 A1 4/2014
CA 2888658 C 6/2014
CA 2898173 A1 8/2014
CA 2902231 A1 8/2014
CA 2901582 A1 11/2014
CA 2832794 C 3/2016
CA 2833096 C 5/2016
CN 101646613 A 2/2010
CN 102741136 A 10/2012

(56) **References Cited**

FOREIGN PATENT DOCUMENTS

CN	104334473	A	2/2015
DE	1207866	B	12/1965
DE	1221960	B	7/1966
DE	3432339	A1	3/1986
DE	19910226	A1	9/2000
DE	69615001	T2	3/2002
DE	202006003115	U1	5/2006
DE	60115221	T2	7/2006
DE	102006004329	A1	8/2007
DE	202009014945	U1	9/2010
DE	202010007919	U1	11/2010
DE	102010027485	A1	1/2012
DE	102010034206	A1	2/2012
DE	102011010534	A1	8/2012
DE	102011115833	A1	4/2013
DE	102012110446	A1	1/2014
DE	102014018470	A1	6/2016
EP	0224297	A1	6/1987
EP	0242556	A1	10/1987
EP	0244339	A1	11/1987
EP	0272432	A1	6/1988
EP	0272922	A2	6/1988
EP	0334572	A1	9/1989
EP	0455337	A1	11/1991
EP	0468078	A1	1/1992
EP	0468079	A1	1/1992
EP	0512468	A1	11/1992
EP	569230	A1	11/1993
EP	0569230	A1	11/1993
EP	0656224	A1	6/1995
EP	0638486	B1	10/1996
EP	0844195	A1	5/1998
EP	0859467	A1	8/1998
EP	0923865	A2	6/1999
EP	1129623	A1	9/2001
EP	1221418	A1	7/2002
EP	1273528	A1	1/2003
EP	1344722	A1	9/2003
EP	1344724	A1	9/2003
EP	1363501	A2	11/2003
EP	1471012	A2	10/2004
EP	1555219	A1	7/2005
EP	1559351	A2	8/2005
EP	1586534	A1	10/2005
EP	1710173	A1	10/2006
EP	1722398	A1	11/2006
EP	1772398	A1	4/2007
EP	1792850	B1	6/2007
EP	1796516	A2	6/2007
EP	1849718	A1	10/2007
EP	1859713	A1	11/2007
EP	1882432	A1	1/2008
EP	1882432	B1	1/2008
EP	1892199	A1	2/2008
EP	1974638	A1	10/2008
EP	2145759	A1	1/2010
EP	2158829	A1	3/2010
EP	1882431	B1	4/2010
EP	2218653	A1	8/2010
EP	2230195	A1	9/2010
EP	2239211	A1	10/2010
EP	2284102	A1	2/2011
EP	2287090	A1	2/2011
EP	2364930	A2	9/2011
EP	2384133	B1	11/2011
EP	2384199	A1	11/2011
EP	2412645	A1	2/2012
EP	2444339	A1	4/2012
EP	2012994	B1	7/2012
EP	2484505	A2	8/2012
EP	2537778	A1	12/2012
EP	2559636	A1	2/2013
EP	2595902	A1	5/2013
EP	2780866	B1	9/2014
EP	2809006	A1	12/2014
EP	2957525	A1	12/2015
EP	3023361	A1	5/2016
EP	2569230	B1	7/2016
FR	2556323	A1	6/1985
FR	2912124	A1	8/2008
FR	2963332	A1	2/2012
GB	1402799	A	8/1975
GB	2469874	A	11/2010
GB	2482032	A	1/2012
JP	S62-130649	A	6/1987
JP	S62-168512	A	7/1987
JP	S6415233	A	1/1989
JP	H0I-233688	A	9/1989
JP	02289207	A	11/1990
JP	H0394377	A	4/1991
JP	H04176311	A	6/1992
JP	H06510682	A	12/1994
JP	2001-017094	A	1/2001
JP	2001-082699	A	3/2001
JP	2001-250161	A	9/2001
JP	2002-274000	A	9/2002
JP	2002-347852	A	12/2002
JP	2003-522567	A	7/2003
JP	2003-235733	A	8/2003
JP	2003-265320	A	9/2003
JP	2004-097015	A	4/2004
JP	2004-533305	A	11/2004
JP	2005-199070	A	7/2005
JP	2006-510682	A	3/2006
JP	2007-522856	A	8/2007
JP	2010-500199	A	1/2010
JP	2010-507418	A	3/2010
JP	2010-516364	A	5/2010
JP	2010-528635	A	8/2010
JP	2013-538609	A	10/2013
JP	2015-085086	A	5/2015
KR	1020050107747	A	11/2005
KR	200435370	Y1	1/2007
NZ	596919	A	11/2013
WO	94/01344	A1	1/1994
WO	98/51396	A1	11/1998
WO	99/03753	A1	1/1999
WO	99/58035	A1	11/1999
WO	2001/060712	A1	8/2001
WO	01/99047	A	12/2001
WO	02/28241	A	4/2002
WO	02/078498	A1	10/2002
WO	2004/065258	A2	8/2004
WO	2004/071899	A1	8/2004
WO	2004/082390	A1	9/2004
WO	2005/044067	A1	5/2005
WO	2005/047111	A1	5/2005
WO	2005/079638	A1	9/2005
WO	2006/108578	A1	10/2006
WO	2006/121520	A2	11/2006
WO	2007/042414	A1	4/2007
WO	2007/042486	A2	4/2007
WO	2007/114685	A1	10/2007
WO	2007/122144	A1	11/2007
WO	2007/122208	A1	11/2007
WO	2008/011913	A1	1/2008
WO	2008/090122	A2	7/2008
WO	2008/107645	A2	9/2008
WO	2008/121489	A1	10/2008
WO	2008/126045	A1	10/2008
WO	2008/132571	A1	11/2008
WO	2009/084061	A1	7/2009
WO	2009/112291	A1	9/2009
WO	2009/114119	A1	9/2009
WO	2009/115475	A1	9/2009
WO	2009/130311	A1	10/2009
WO	2009/153161	A1	12/2009
WO	2010/007633	A1	1/2010
WO	2010/026052	A1	3/2010
WO	2010/026053	A1	3/2010
WO	2010/013146	A3	4/2010
WO	2010/034663	A1	4/2010
WO	2010/041179	A2	4/2010
WO	2010/076048	A1	7/2010

(56) **References Cited**

FOREIGN PATENT DOCUMENTS

WO	2010/076263	A1	7/2010	
WO	2010/076761	A1	7/2010	
WO	2010/085824	A1	8/2010	
WO	2010/099806	A1	9/2010	
WO	2010/118545	A2	10/2010	
WO	2010/125326	A1	11/2010	
WO	2010/125329	A1	11/2010	
WO	2010/138563	A1	11/2010	
WO	2010/137952	A1	12/2010	
WO	2010/137960	A1	12/2010	
WO	2011/000723	A2	1/2011	
WO	2011/012501	A1	2/2011	
WO	2011/047836	A1	4/2011	
WO	2011/141532	A1	11/2011	
WO	2011/147491	A1	12/2011	
WO	2011/147553	A1	12/2011	
WO	2011/147591	A1	12/2011	
WO	2012/007257	A1	1/2012	
WO	2012/009668	A1	1/2012	
WO	2012/019902	A1	2/2012	
WO	2012/038063	A1	3/2012	
WO	2012/057257	A1	5/2012	
WO	2012/080928	A1	6/2012	
WO	2012/100977	A1	8/2012	
WO	2012/104760	A1	8/2012	
WO	2012/135204	A1	10/2012	
WO	2012/175985	A1	12/2012	
WO	2013/008012	A2	1/2013	
WO	2013/032330	A1	3/2013	
WO	2013/043048	A1	3/2013	
WO	2013/136209	A1	9/2013	
WO	2013/171663	A1	11/2013	
WO	2013/189923	A1	12/2013	
WO	2014/001563	A1	1/2014	
WO	2014/001564	A1	1/2014	
WO	2014/004231	A1	1/2014	
WO	2014/004564	A1	1/2014	
WO	2014/006048	A2	1/2014	
WO	2014/090567	A1	6/2014	
WO	2014/102702	A1	7/2014	
WO	2014/127863	A1	8/2014	
WO	2014/191044	A1	12/2014	
WO	WO-2014191044	A1 *	12/2014	..... A47J 31/3628
WO	2012/000878	A2	1/2015	
WO	2015/028425	A2	3/2015	
WO	2015/062703	A1	5/2015	
WO	2015/075584	A1	5/2015	
WO	2015/107484	A1	7/2015	
WO	2016/077916	A1	5/2016	

OTHER PUBLICATIONS

Decision on Appeal before the Patent Trial and Appeal Board for Appeal No. 2017-007984 dated May 10, 2019.
Notice of Opposition regarding EP3023362 filed Jul. 30, 2018.
Search Report for CN201180035944 dated Sep. 25, 2014.
First Office Action for Application No. CN201180035944 dated Oct. 10, 2014.
Second Office Action for Application No. CN201180035944 dated Apr. 21, 2015.
Third Office Action for Application No. CN201180035944 dated Nov. 12, 2015.
Notification to Grant Patent for Application No. CN201180035944 dated May 25, 2016.
Search Report for CN201610644043 dated May 11, 2018.
First Office Action for CN201610644043 dated May 28, 2018.
Search Report and Written Opinion for PCT/EP2011/003677 dated Jul. 22, 2011.
Search Report and Written Opinion for Application No. EP 15174333.3 dated Nov. 3, 2015. (EP2952453).
Office Action for Application No. EP 15174333.3 dated Aug. 16, 2016. (EP2952453).
Search Report and Written Opinion for Application No. EP 15173071.0 dated Nov. 5, 2015. (EP2957525).
Office Action for Application No. EP 15173071.0 dated Nov. 5, 2015. (EP2957525).
Third party observation for Application No. EP2957525 dated Sep. 30, 2016.
Search Report and Written Opinion for Application No. EP 15197332.8 dated Apr. 12, 2016. (EP3023361).
First Office Action for Application No. EP 15197332.8 dated Jan. 19, 2017. (EP3023361).
Second Office Action for Application No. EP 15197332.8 dated May 24, 2017. (EP3023361).
Third Office Action for Application No. EP 15197332.8 dated Nov. 2, 2017. (EP3023361).
Search Report and Written Opinion for Application No. EP 15197336.9 dated Apr. 4, 2016 (EP3023362).
Search Report and Written Opinion for Application No. EP 15197338.5 dated Apr. 7, 2016 (EP3023363).
Search Report for Application No. JP 2013-520009 dated Nov. 25, 2014. (JP5946828).
First Office Action for Application No. JP 2013-520009 dated Dec. 10, 2014. (JP5946828).
Second Office Action for Application No. JP 2013-520009 dated Aug. 19, 2015. (JP5946828).
Decision to Grant for Application No. JP 2013-520009 dated Apr. 28, 2016. (JP5946828).
Search Report for Application No. JP 2016-032427 dated Nov. 21, 2016. (JP2016163691).
First Office Action for Application No. JP 2016-032427 dated Nov. 28, 2016. (JP2016163691).
Second Office Action for Application No. JP 2016-032427 dated Jun. 20, 2017. (JP2016163691).
Search Report for Application No. JP 2017-034769 dated Nov. 15, 2017. (JP2017148511).
Office Action for Application No. JP 2017-034769 dated Jan. 30, 2018. (JP2017148511).
Office Action for Application No. KR 10-2013-7004356 dated Apr. 5, 2018. (KR20137004356).
Office Action for Application No. 10-2017-7019956 dated Apr. 10, 2018. (KR20170087528).
Opposition Request against European Patent No. EP 3 023 362 dated Jul. 1, 2019.
Notice of Opposition for Application No. 19165223.9 dated Feb. 24, 2020.
Notice of Opposition for European Patent No. EP3521208 granted Feb. 19, 2020.
Opposition against European Patent No. EP3521208; Application No. 19165223.9 granted Feb. 19, 2020.
Communication of Notice of Opposition dated Jan. 27, 2020 for Application No. 19165219.7.
English Translation of JP2003235733.
Wikipedia definition of "Deep Drawing" http://en.wikipedia.org/wiki/Deep_Drawing.
Wikipedia definition of "Tiefziehen" http://de.wikipedia.org/wiki/Tiefziehen.
Wikipedia definition of "Stamping (metalworking)" https://en.wikipedia.org/wiki/Stamping_(metalworking).
Wikipedia definition of "Barcode".
Regulation (EC) No. 1935/2004 of the European Parliament and of the Council of Oct. 27, 2004 Official of the European Union.
Brief Communication for Opposition Proceedings for Appl. 15197336.9, dated Mar. 19, 2020.
Oral Letter regarding the opposition Procedure dated Mar. 16, 2020 for EP 3023362.
Opposition oral letter regarding the opposition procedure dated Mar. 16, 2020, for EP 023362.
Annex to the Communication Opposition Appln No. 15197336.9; 2020.
Brief Communication-Opposition Proceedings for Appl. No. 15197336.9; dated Jan. 8, 2020.
Letter regarding Opposition Procedure for EP Patent No. 3023362 dated Dec. 23, 2019.
Brief Communication for Appl No. 15197336.9 dated Oct. 15, 2019.

(56) **References Cited**

OTHER PUBLICATIONS

"Information technology—Automatic identification and data capture techniques—EAN/UPC bar code symbol specification" Second Edition: Dec. 15, 2009.
Letter accompanying subsequently filed items for EP3023362, KRO-44; Oct. 10, 2019.
Brief Communication—Opposition Proceedings for Appl No. 15197336.9 dated Jul. 23, 2019.
Letter accompanying subsequently filed items for EP3023362 1038-CMS-O; Jul. 17, 2019.
Brief Communication—Opposition proceedings for Appln No. 15197336.9 dated Jul. 12, 2019.
Opposition Procedure for EP Patent No. EP 3023362 dated Jul. 1, 2019.
Miscellaneous requests concerning client data EPO—Jun. 12, 2019.
Letter regarding the Opposition Procedure KRO-44/FWJPL dated Mar. 20, 2019.
Ralf Jesse, "Barcode" Gutachten zur Frage Begriffle, Bitcode/Binacode; Patents EP 3023362; May 19, 2019.
"Information technology—Automatic identification and data capture techniques—Bar code verifier conformance specification—Part 1: Linear symbols" May 20, 2019 10:12.
"Information technology—Automatic identification and data capture techniques—Bar code print quality test Spec Linear Symbols" German Version: EN ISO/IEC 15416:2001: 1998-02.
Declaration under 27 C.F.R, for U.S. Appl. No. 13/697,297; Aug. 15, 2016.
Wikipedia "Binarcode" https://de.wikipedia.org/wiki/Binarcode.
Rosenbaum, Jessie, "Bar-Code" Theorie Lexikon Software; 2000.
Potter Mathia, "BARCODE" Euinfuhrung und Andwendungen; 1993.
Oliver Rosenbaum "Das Barcode-Lexicon" edition advanced: cbhv; 1997.
Fairley Michael "Codes and Coding Technology" LCGS, FIP3 and FLOM3: A Labels & Labeling Publication 2015.
Claims—Amended Claims with annotations-2.
Claims—May 20, 2019 Amended Claims with Annotations.
Auxiliary request during Opposition procedure—May 20, 2019.
Letter regarding opposition procedure for EP 3023362 dated Mar. 4, 2019.
Definition of Barcode by Merriam-Webster https://www.meriam-webster.com/dictionary/barcode.
Barcode-Wikitionary "Barcode" https://de.wikitionary.org/wiki/Barcode 2018.
Strichcode—Wikipedia "Strichcode" https://de.wikiepdia.org/wiki/strichcode.
Reply of the patent proprietor to the notice of opposition Feb. 11, 2019; Appln No. 151973366.9.
Notice of Opposition against European Patent No. EP 3023362 dated Jul. 30, 2018.
Notice of Opposition to a European patent, Patent No. EP3023362 dated Jul. 24, 2018.
Specification NP-C2.03-02-SP-04-2 Membrane.
Specification NP-C2.03-01-SP-01-4 empty capsule.
Marketing brochure "Nespresso Varietäten mit 5 neuen Grand Crus".
Photo taken in Nespresso store.
Marketing brochure "i6 Grands Crus—geschaffen um Ihre Sinne zu ilberraschen".
RTS online article.
Invoice for various Nespresso capsules, dated May 4, 2009.
Invoice for various Nespresso capsules, dated Aug. 10, 2009.
Invoice for various Nespresso capsules, dated Dec. 2, 2009.
Invoice for various Nespresso capsules, dated May 18, 2009.
Invoice for various Nespresso capsules, dated Oct. 21, 2008.
Invoice for various Nespresso capsules, dated Jun. 24, 2009.
Invoice for various Nespresso capsules, dated May 19, 2008.
Invoice for various Nespresso capsules, dated Sep. 10, 2008.
Invoice for various Nespresso capsules, dated Feb. 17, 2009.
Invoice for various Nespresso capsules, dated Dec. 22, 2008.
User manual for the Tassimo@ brewing machine.
Web article discussing the T-discs@ cartridges.
Regulation No. 817.023.21 of the EDI on consumer goods.
Regulation No. 817.022.3 1of the EDI on the additives permitted in foodstuffs.
Regulation of the Swiss Federal Council on Foodstuffs and Consumer Goods.
"European Printing Ink Association" Guideline on Printing Inks.
Leaflet on printing inks for food packages from the division "Printing Inks" of the Association of the German Paint and Printing Ink Industry.
EuPIA Exclusion List for Printing Inks and Related Products.
EuPIA Guideline on Good Manufacturing Practices for the Production of Packaging Inks formulated for use on the non-food contact surfaces of food packaging and articles intended to come into contact with food.
Commission Regulation (EC) No. 2023/2006.
Council Directive 89/109/EEC relating to materials and articles intended to come into contact with foodstuffs.
Policy Statement on Packaging Inks applied to the non-food contact surface of Food Packaging of the public health committee of the council of Europe.
Nestle Guidance Note on Packaging Inks.
Council Directive on the colouring matters authorised for use in foodstuffs intended for human consumption.
Council Directive 89/107/EEC on the approximation of the laws of the Member States concerning food additives authorized for use in foodstuffs intended for human consumption.
European Parliament and Council Directive 94/36/EC on colours for use in foodstuffs.
Excerpt from the textbook "Plastics Packaging—Properties, Processing, Applications and Regulations" by Selke/Culter/Hernandez.
"Lexikon Verpackungstechnik" by Bleisch/Goldhahn/Schricker/Vogt.
Paper titled "Aromaveranderung von vakuumverpacktem Kaffee bei unterschiedlichen Packstoffen" by Lindner-Steinert/Zou.
Paper "Die flexible Verpackung von morgen—Anforderungen an die Veredler" by Agulla/Langowski.
Excerpt from publication "Grundziige der Lebensmitteltechnik" of 2004 by Tscheuschner.
Excerpt from publication "Produkt-bkobilanz vakuumverpackter Rostkaffee" of 1999 by Diers/Langowski/Pannkoke.
3rd Party Observations in EP Patent Application No. 19 165 220.5 (3 533 726), dated Jun. 19, 2020.
Opposition Against EP Patent No. EP 3 023 362 dated Jul. 13, 2020.
Letter dated Sep. 30, 2020 from file of U.S. Appl. No. 16/517,054 (by Société Des Produits Nestlé S.A.).
Supplemental arguments filed by Societe des Produits Nestle S.A. in the opposition against European Patent No. EP3521209, dated Jan. 7, 2021.
Suggestion for Declaration of Interference dated Sep. 30, 2019.
Petition for Inter Partes Review of U.S. Pat. No. 10,870,531 (IPR2021-01223), dated Jul. 12, 2021.
Petition for Inter Partes Review of U.S. Pat. No. 10,858,176 (IPR2021-01221), dated Jul. 12, 2021.
Petition for Inter Partes Review of U.S. Pat. No. 10,858,177 (IPR2021-01222), dated Jul. 12, 2021.
Declaration of Michael Jobin, Exhibit 1003 from Petition for Inter Partes Review of U.S. Pat. No. 10,858,177 (IPR2021-01222), dated Jul. 12, 2021.
Declaration of Michael Jobin, Exhibit 1003 from Petition for Inter Partes Review of U.S. Pat. No. 10,858,176 (IPR2021-01221), dated Jul. 12, 2021.
Declaration of Michael Jobin, Exhibit 1003 from Petition for Inter Partes Review of U.S. Pat. No. 10,870,531 (IPR2021-01223), dated Jul. 12, 2021.
Nespresso's Preliminary Invalidity Contentions from US District Court Central District of California Case No. 2:21-cv-3402 GW(ARGx), dated Sep. 22, 2021.
English Translation of JPH1-233688.
Submission Dated Apr. 5, 2019, European Patent No. EP3023362.
Third party Observations EP3533726, dated Aug. 26, 2021.

(56) **References Cited**

OTHER PUBLICATIONS

Opposition against European Patent No. EP3521210; dated Oct. 7, 2020.
Opposition against European Patent No. EP3521210; dated Jan. 8, 2020.
Submission for EP Patent No. 3023362, dated Jan. 7, 2021, In response to the Provisional Opinion.
Submission for European Patent No. EP3023362, dated Mar. 26, 2021.
Submission for European Patent No. EP3023362, dated Mar. 26, 2021, In response to the Provisional Opinion.
Submission for European Patent No. EP3023362, dated Apr. 27, 2021.
Submission for European Patent No. EP3521207, dated Mar. 15, 2021.
Submission for European Patent No. EP3521207, dated Oct. 21, 2020.
Submission for European Patent No. EP3521208, dated Mar. 12, 2021.
Submission for European Patent No. EP3521208, dated Oct. 29, 2020.
Submission for European Patent No. EP3521209, dated Jan. 7, 2021.
Submission for European Patent No. EP3521209, dated Oct. 21, 2020.
Wikipedia definition of "Spritzgieben" https://de.wikipedia.org/wiki/Spritzgie%C3%9Fen.
Definition of "Werkstoff" https://www.dwds .de/wb/Werkstoff.
Definition of "Filter" https://www.dwds.de/wb/Filter.
Convenience First: Espresso Pods and Capsules, Jan. 2009. https://www.coffeereview.com/convenience-first- espresso-pods-and-capsules.
Espresso En Capsule, Mar. 2021. https://www.swissinfo.ch/fre/le-march%C3%A9-du-caf%C3%A9-en-capsules-explose-et-inqui%C3%A8te/6421908.
Wiktionary definition of the expression "á base de" available online at: https://fr.wiktionary.org/wiki/%C3%A0_base_de.
D130, the Robert definition of "base" available online at: https://dictionnaire.lerobert.com/definition/base.
Key Science Physics Matter and Energy Strength https://books.google.ch/books?id=uSPzV9R08nsC&pg=PA36%20&dq=%22corrugated_+plastic%22+packaging&hl=fr&sa=X&ve%20d=2ah%20U%20KEwjvlrqZxaXy%20Ah%20Vkx4sKHYIZAHk4PBDoAT%20AlegQIC%20RAC#v=onepage&q.
Key Science Chemistry, toughness and Brittleness https://books.google.ch/books?id=CK8OgULw4oMC&pg_=PA_1_1&dq=%22_corrugated+plastic%22_+packaging_&h_l=fr&sa=X&_ved=2ahUKEwjlrqZxaXvAhVkx4sKHYIZAHk4PBDoATAHegO_ICBAC#v=onepage&q=%22corrugated%20plastic%22%20pa_ckaging&f=false.
Reusable Transport Packaging 1973 https://books.google.ch/books?id=fitxOnnXD_wC&q=%22corr%20ugated+plastic%22&dq=%22c%20orrugated+plastic%22&h%20l=fr%20&sa=X&%20ved_=2ah%20U%20KEwj787n%201vqX%20vAhUlqQKHfiDDOq4PBDoATAAeqQIARAC.
Annex illustrating the handling of a double patenting issue.
Opposition Request against European Patent No. EP 2525692B1; dated Jul. 29, 2015.
Strategic Innovation 1999 https://books.google.ch/books?id=rTKHB-9YUbwC&pg=PA%2018&dq=coffee+capsules&hl=fr&sa=X&ved=%202ahUKEwjFgvDQhaXvAhWYA2MBHdhuDMsQ6AEwBXoEC%20A%20YQAg#v=onepaQe&q=coffee%20capsules&f=false.
Le Marche Du Cafe En Capsules Explose Et Inquiete https://pages.rts.ch/emissions/abe/515911-espresso-encapsule-abe-a-soulevelecouvercle.html.
Kaffeepads Uno-Kapseln Konnen Zur Kostenfalle Werden https://www.t-online.de/leben/id_41150796/kaffeekaffeepads-_und-kapseln-koennen-zurkostenfalle-werden.html.
La Dosette De Cafe: L'Environnement Boit La Tasse https://www.consoglobe.com/dosette-cafe-environnement-boit-tasse-1957-cg.
Preparatory Studies for Ecodesign https://www.eceee.org/static/media/uploads/site-2/ecodesign/products/lot25-non-tertiary_coffee-machines/final_report-task_1_.pdf.
Energie-Environnement.Ch Machine a Café https://www.energie-environnement.ch/appareils-electromenagers/machine-a-cafe.
Is There a Serious Problem With Coffee Capsules? https://www.bbc.com/news/magazine-35605927.
Freshness Indices of Roasted Coffee https://www.researchgate.net/publication/26211090_FreshnessIndices_of_Roasted_ Coffee_Monitoring_the_Loss_of_Freshness_for_Single_Serve_Capsules_and_Roasted_Whole_Beans_in_DifferentPackaging.
Comparative Life Cycle Assessment https://uwspace.uwaterloo.ca/bitstream/handle/10012/12860/Li_Jinqxi.pdf?sequence=5&isAllowed=Y.
Schnitt-, Stanz-Uno Ziehwerkzeuge https://books.google.ch/books?id=-qCnBgAAQBAJ&pg=PA386&dq=tiefziehen+aluminiumblech&hl=en&sa=X&_ved=2ah_U_ KEwj_HybqNx6L_v_Ah_UDwKQKHSNsAbEQ6AEwAXoECAgQAg#v=onepage&q=tiefziehen%20aluminiumblech&f=false.
Thermo-Mechanical Processing of Metallic Materials https://books.google.ch/books?id=VE20YVDTBZUC&pg=PA370&dq=%22deep+drawing%22+%22aluminium+sheet%22&hl=fr&sa=X&ved=2ah_U_KEwj3ouSI0qL_v_AhWQyqQKH_RbqD?YQ6AEwBHoECAUQAg#v=onepage&q=%22deep%20drawing%22%20%22aluminium%20sheet%22&f=false.
Packaging: Specifications https://books.google.ch/books?id=N1_TLbP9CiDUC&pg=PA265&Ipg=PA265&dq=aluminum+can+barcode+print++varnish&source=bl&ots=rJuPKZptU3&sig=ACfU3U0KHflM3Wh2Gw0zEblq7DDXt5TQxQ&hl=en&sa=X&ved=2ahUKEwjW0NmK64LvAhVnCWMBHRIYCloQ6AEwEXoECA0QAw#v=onepage&q=aluminum%20can%20barcode%20print%20%20varnish&f=fAlse.
Improving Traceability in Food Processing and Distribution https://books.google.ch/books?id=v75QAwAAQBAJ&gg=PA209&dg=barcode+ink+gackaging+food&hl=fr&sa=X&ved=2ahUKEwiQ2JjVvKkvAhUDIMUKHU3gDPYQ6AEwBHoECAYQAg#v=oneQage&g=barcode%20ink%20gackaging%20food&f=false.
Food Packaging https://books.google.ch/books?id=NFRR6GayR74C&pg=PA265&dq=welding+plastic+packaging+food&hl=fr&sa=X&ved=2ahUKEwiwhqff1_KPvAhWM14sKHRXUDls4HhDoATACegQIBBAC#v=onepage&q=welding%20plastic%20packaging%20food&f=false.
Coffee Love https://books.google.ch/books?id=0OxRp3jlQlsC&pg=PA_14&dq=coffee+capsu_les&_hl=fr_&sa=X&_ved=2ah_U_KEwj_F0qvMk6XvAhWTBGMBHYddCp04ChDoATAlegQIAhAC#v=onepage&Q=coffee%20capsules&f=false.
Structural Design Procedure https://books.google.ch/books?id=4L64mKIG_4UC&pg=PA_1&dq=%22corrugated+plasti_c%22&h_l=fr&sa=X&_ved=2ah_U_KEwjlcz6uaXvAhWRzaQKHcQpAF4O6AEwAnoECAMQAg#v=onepage&q=%22corrugated%20plastic%22&f=false.
Package Engineering https://books.google.ch/books?id=DydNAAAA_YAAJ&q=%22corrugated+plastic%22&dq=%22corrugated+plastic%22&hl=fr&sa=X&_ved=2ah_U_KEwiq296WvaXv_Ah_WI_POwKHfcaDrk4KBDoATAGeQOIBBAC.
Exhibit A-1—Nespresso's Preliminary Invalidity Contentions dated Sep. 22, 2021.
Exhibit A-2—Nespresso's Preliminary Invalidity Contentions dated Sep. 22, 2021.
Exhibit A-3—Nespresso's Preliminary Invalidity Contentions dated Sep. 22, 2021.
Exhibit A-4—Nespresso's Preliminary Invalidity Contentions dated Sep. 22, 2021.
Exhibit A-5—Nespresso's Preliminary Invalidity Contentions dated Sep. 22, 2021.
Exhibit A-6—Nespresso's Preliminary Invalidity Contentions dated Sep. 22, 2021.
Exhibit A-7—Nespresso's Preliminary Invalidity Contentions dated Sep. 22, 2021.
Exhibit A-8—Nespresso's Preliminary Invalidity Contentions dated Sep. 22, 2021.

(56) **References Cited**

OTHER PUBLICATIONS

Exhibit A-9—Nespresso's Preliminary Invalidity Contentions dated Sep. 22, 2021.
Exhibit B-1—Nespresso's Preliminary Invalidity Contentions dated Sep. 22, 2021.
Exhibit B-2—Nespresso's Preliminary Invalidity Contentions dated Sep. 22, 2021.
Exhibit B-3—Nespresso's Preliminary Invalidity Contentions dated Sep. 22, 2021.
Exhibit B-4—Nespresso's Preliminary Invalidity Contentions dated Sep. 22, 2021.
Exhibit B-5—Nespresso's Preliminary Invalidity Contentions dated Sep. 22, 2021.
Exhibit B-6—Nespresso's Preliminary Invalidity Contentions dated Sep. 22, 2021.
Exhibit B-7—Nespresso's Preliminary Invalidity Contentions dated Sep. 22, 2021.
Exhibit B-8—Nespresso's Preliminary Invalidity Contentions dated Sep. 22, 2021.
Exhibit B-9—Nespresso's Preliminary Invalidity Contentions dated Sep. 22, 2021.
Exhibit C-1—Nespresso's Preliminary Invalidity Contentions dated Sep. 22, 2021.
Exhibit C-2—Nespresso's Preliminary Invalidity Contentions dated Sep. 22, 2021.
Exhibit C-3—Nespresso's Preliminary Invalidity Contentions dated Sep. 22, 2021.
Exhibit C-4—Nespresso's Preliminary Invalidity Contentions dated Sep. 22, 2021.
Exhibit C-5—Nespresso's Preliminary Invalidity Contentions dated Sep. 22, 2021.
Exhibit C-6—Nespresso's Preliminary Invalidity Contentions dated Sep. 22, 2021.
Exhibit C-7—Nespresso's Preliminary Invalidity Contentions dated Sep. 22, 2021.
Exhibit C-8—Nespresso's Preliminary Invalidity Contentions dated Sep. 22, 2021.
Exhibit C-9—Nespresso's Preliminary Invalidity Contentions dated Sep. 22, 2021.
Exhibit A—Nespresso's Preliminary Invalidity Contentions dated Sep. 22, 2021.
Exhibit B—Nespresso's Preliminary Invalidity Contentions dated Sep. 22, 2021.
Exhibit C—Nespresso's Preliminary Invalidity Contentions dated Sep. 22, 2021.
Nespresso's Preliminary Invalidity Contentions dated Jul. 6, 2022, against U.S. Pat. No. 11,254,491, in Case No. 2:22-cv-00525-GW (AGRx).
Appendix A—Obviousness Chart for U.S. Pat. No. 11,254,491 referred to in Nespresso's Preliminary Invalidity Contentions dated Jul. 6, 2022, against U.S. Pat. No. 11,254,491, in Case No. 2:22-cv-00525-GW (AGRx).
Exhibit A-1 Invalidity of U.S. Pat. No. 11,254,491 in view of Denisart, referred to in Nespresso's Preliminary Invalidity Contentions dated Jul. 6, 2022, against U.S. Pat. No. 11,254,491, in Case No. 2:22-cv-00525-GW (AGRx).
Exhibit A-2 Invalidity of U.S. Pat. No. 11,254,491 in view of Giua, referred to in Nespresso's Preliminary Invalidity Contentions dated Jul. 6, 2022, against U.S. Pat. No. 11,254,491, in Case No. 2:22-cv-00525-GW (AGRx).
Exhibit A-3 Invalidity of U.S. Pat. No. 11,254,491 in view of Jarisch, referred to in Nespresso's Preliminary Invalidity Contentions dated Jul. 6, 2022, against U.S. Pat. No. 11,254,491, in Case No. 2:22-cv-00525-GW (AGRx).
Exhibit A-4 Invalidity of U.S. Pat. No. 11,254,491 in view of Jarisch 929, referred to in Nespresso's Preliminary Invalidity Contentions dated Jul. 6, 2022, against U.S. Pat. No. 11,254,491, in Case No. 2:22-cv-00525-GW (AGRx).
Exhibit A-5 Invalidity of U.S. Pat. No. 11,254,491 in view of Mahlich, referred to in Nespresso's Preliminary Invalidity Contentions dated Jul. 6, 2022, against U.S. Pat. No. 11,254,491, in Case No. 2:22-cv-00525-GW (AGRx).
Exhibit A-6 Invalidity of U.S. Pat. No. 11,254,491 in view of Panesar, referred to in Nespresso's Preliminary Invalidity Contentions dated Jul. 6, 2022, against U.S. Pat. No. 11,254,491, in Case No. 2:22-cv-00525-GW (AGRx).
Exhibit A-7 Invalidity of U.S. Pat. No. 11,254,491 in view of Rossi, referred to in Nespresso's Preliminary Invalidity Contentions dated Jul. 6, 2022, against U.S. Pat. No. 11,254,491, in Case No. 2:22-cv-00525-GW (AGRx).
Exhibit A-8 Invalidity of U.S. Pat. No. 11,254,491 in view of Ruchonnet, referred to in Nespresso's Preliminary Invalidity Contentions dated Jul. 6, 2022, against U.S. Pat. No. 11,254,491, in Case No. 2:22-cv-00525-GW (AGRx).
Exhibit A-9 Invalidity of U.S. Pat. No. 11,254,491 in view of Yoakim, referred to in Nespresso's Preliminary Invalidity Contentions dated Jul. 6, 2022, against U.S. Pat. No. 11,254,491, in Case No. 2:22-cv-00525-GW (AGRx).
Espresso Coffee, The Science of Quality, Second Edition, Edited By Andrew Illy and Rinantonio Viani, referred to in Nespresso's Preliminary Invalidity Contentions dated Jul. 6, 2022, against U.S. Pat. No. 11,254,491, in Case No. 2:22-cv-00525-GW (AGRx).
11—Packaging and the Shelf Like of Coffee, ISBN 9781420078442, Food Packaging and Shelf Life: A Practical Guide (2009), referred to in Nespresso's Preliminary Invalidity Contentions dated Jul. 6, 2022, against U.S. Pat. No. 11,254,491, in Case No. 2:22-cv-00525-GW (AGRx).
Nestle Nespresso SA reply dated Jun. 13, 2022 to Defendant K-fee System GmbH contingent counterclaim.
Applicant statements included in the IDS Transmittal Letter filed on Jul. 27, 2022 relating to: Summary of Foreign Proceedings, Foreign Vindication Proceedings, Claim Construction Order, Preliminary Invalidity Contentions, Request For Patent Cancellation of Korean Patent No. 10-2318476, Notification Of Reasons for Revocation Of Japanese Patent No. 694164.
Nespreso Vertuo Plus User Manual, accessed on Apr. 22, 2022, from: https://www.nespresso.com/shared_res/manuals/vertuoline/www_VERTUOPLUS_C_NESPRESSO_Z1(EN_FR_ES).pdf, and under Document Properties in Adobe includes a Oct. 6, 2016 Created Date and a Oct. 6, 2016 Modified Date.
Final Order On Claim Construction, dated Mar. 10, 2022, in Case No. 2:21-cv-03402-GW (AGRx).
Non-Final Office Action in U.S. Appl. No. 17/547,363, dated Apr. 4, 2022.
Non-Final Office Action in U.S. Appl. No. 17/670,629, dated Apr. 15, 2022.
Petitioner's Request For Rehearing Of The PTAB's Denial of Inter Partes Review of U.S. Pat. No. 10,858,176, filed on Feb. 17, 2022.
Petitioner's Request For Rehearing Of The PTAB's Denial of Inter Partes Review of U.S. Patent No. 10,858,177, filed on Feb. 17, 2022.
Petitioner's Request For Rehearing Of The PTAB's Denial of Inter Partes Review of U.S. Patent No. 10,870,531, filed on Feb. 17, 2022.
Redacted Memorandum Of Points And Authorities In Support Of Nespresso USA, INC.'s Motion For Summary Judgement of Noninfringement, dated Apr. 1, 2022, in Case No. 2:21-cv-03402-GW (AGRx).
Redacted Nespresso USA, INC.'S Separate Statement Of Uncontroverted Facts And Conclusions Of Law In Support Of Its Motion For Summary Judgement Of Noninfringement, dated Apr. 1, 2022, in Case No. 2:21-cv-03402-GW (AGRx).
Redacted Declaration of Christian Jarisch, dated Mar. 30, 2022, and filed in Case No. 2:21-cv-03402-GW (AGRx) on Apr. 1, 2022.
Opposition Appeal Against EP 3023362, dated Dec. 20, 2021, and appended documents.
Exhibit 1045 (English Translation of DE 10 2011 010 534.4) filed by Nespresso USA in IPR2021-01223.
Exhibit 1046 (English Translation of DE 10 2010 031 988.0) filed by Nespresso USA in IPR2021-01223.
Exhibit 1047 (English Translation of DE 10 2010 044 251.8) filed by Nespresso USA in IPR2021-01223.

(56) **References Cited**

OTHER PUBLICATIONS

Third Party Observations against EP 19 165 220.5 (3 533 726), filed by Société des Produits Nestle S.A., Aug. 26, 2021.
Opposition against EP 3 521 209, filed by Société des Produits Nestle S.A., Jan. 22, 2020.
Notice of References in U.S. Appl. No. 17/844,372, dated Aug. 11, 2022.

* cited by examiner

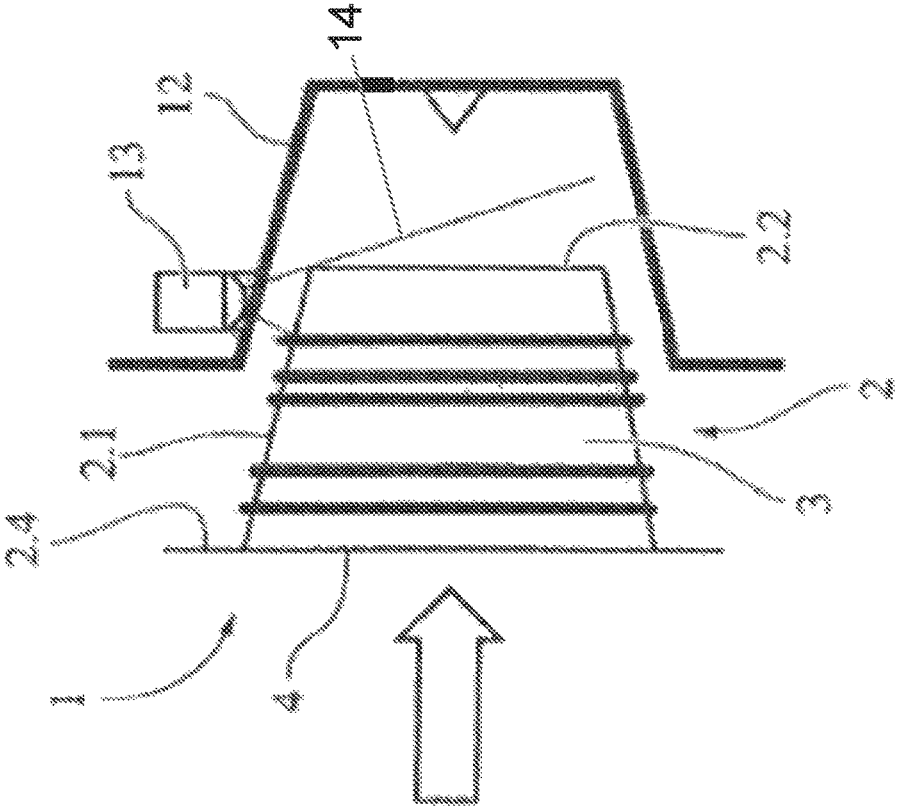

Fig. 1B

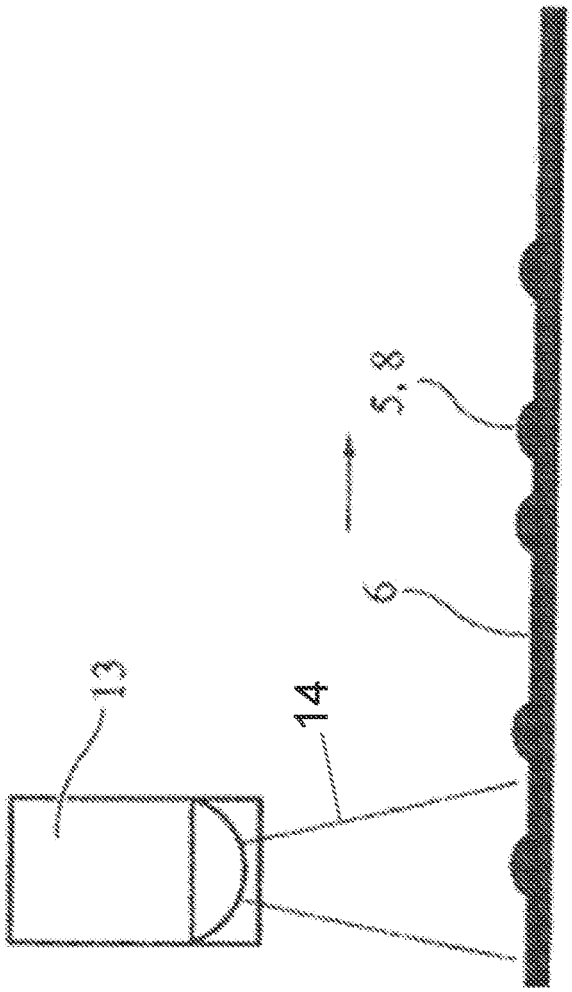

Fig. 1A

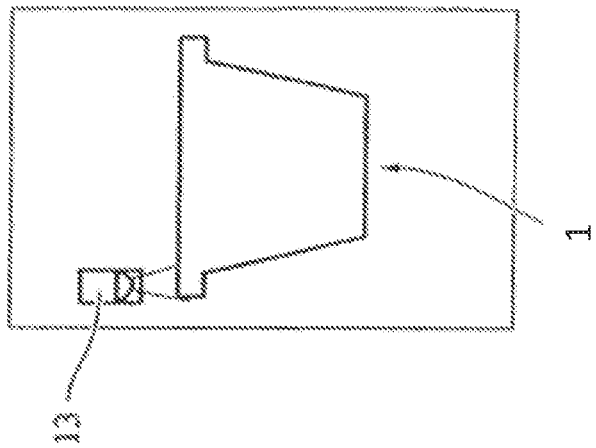

Fig. 2B

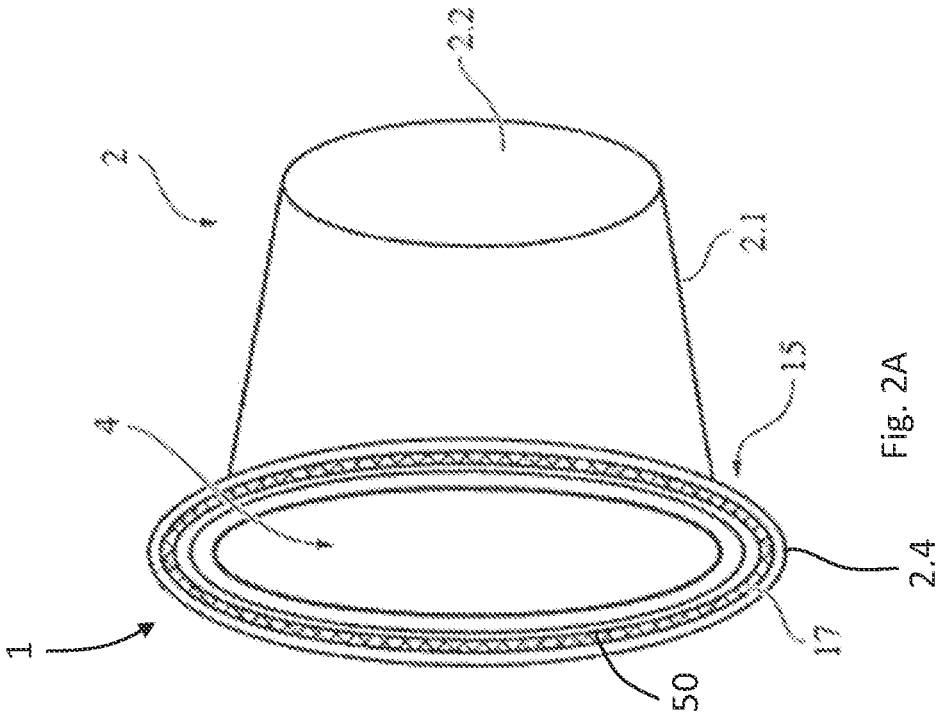

Fig. 2A

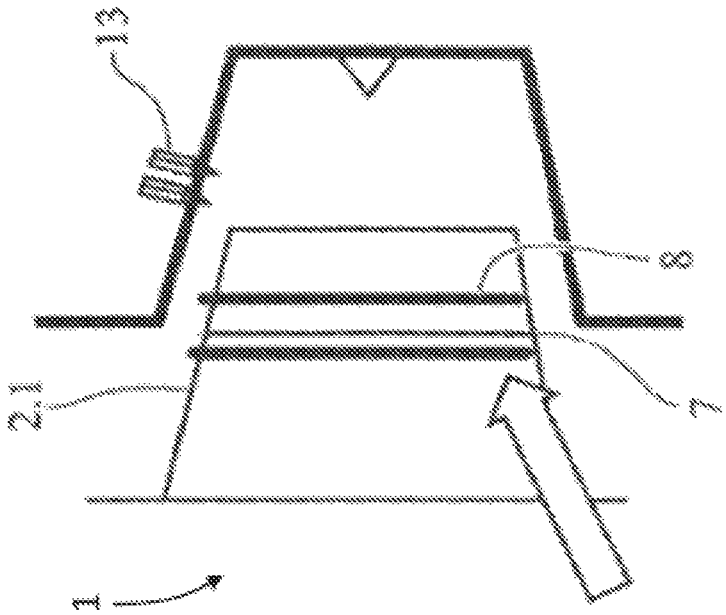

Fig. 3A

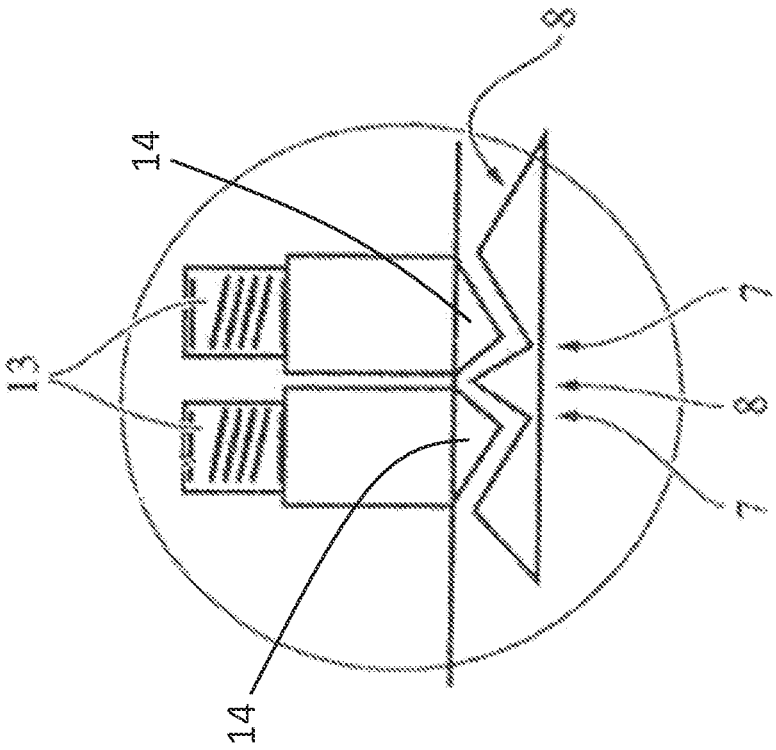

Fig. 3B

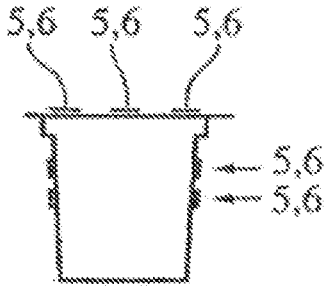

Fig. 4

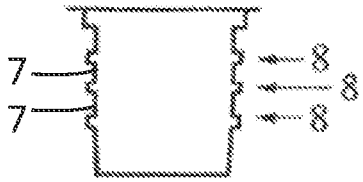

Fig. 5

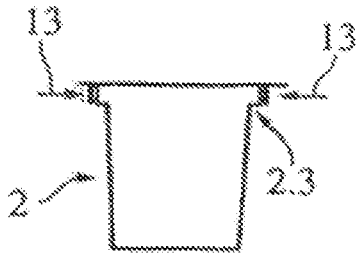

Fig. 6

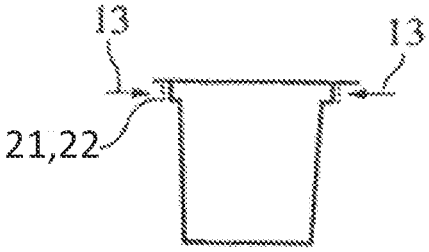

Fig. 7

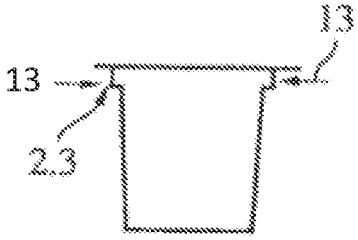

Fig. 8

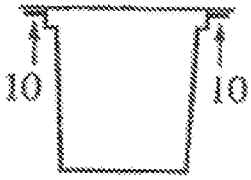

Fig. 9

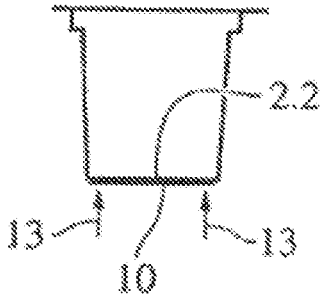

Fig. 10

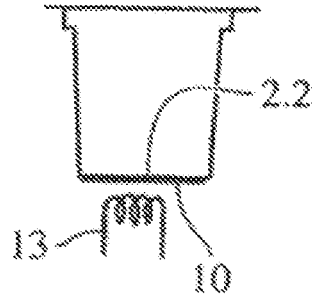

Fig. 11

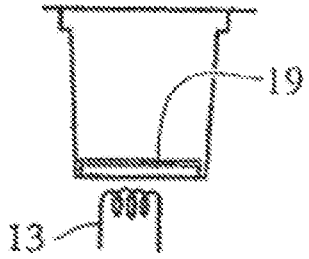

Fig. 12

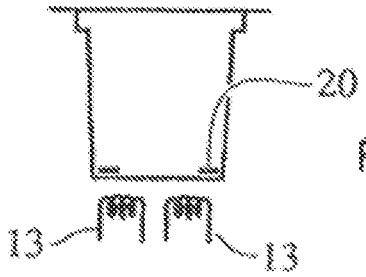

Fig. 13

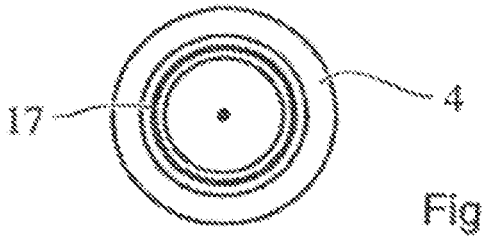

Fig. 14

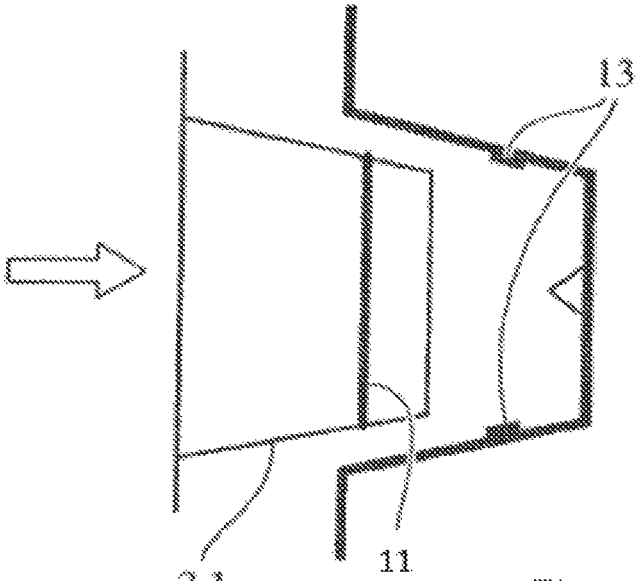

Fig. 15

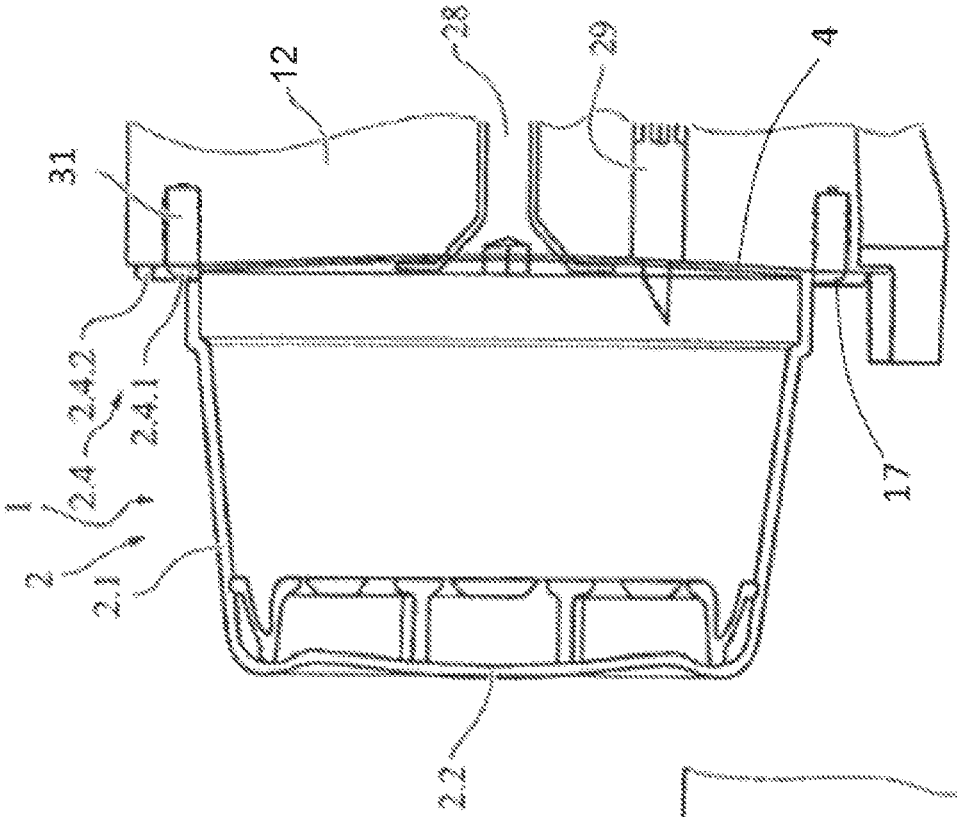

Fig. 16A

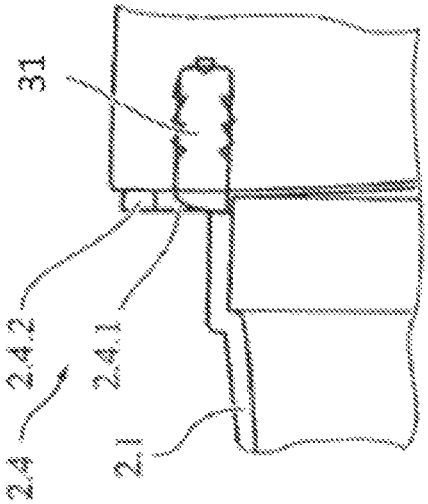

Fig. 16B

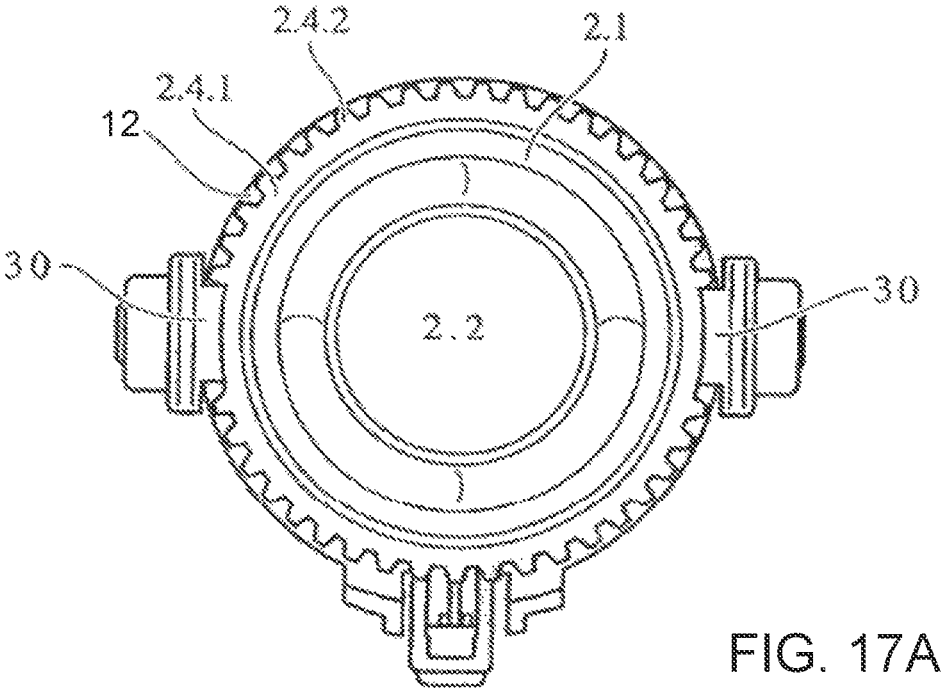

FIG. 17A

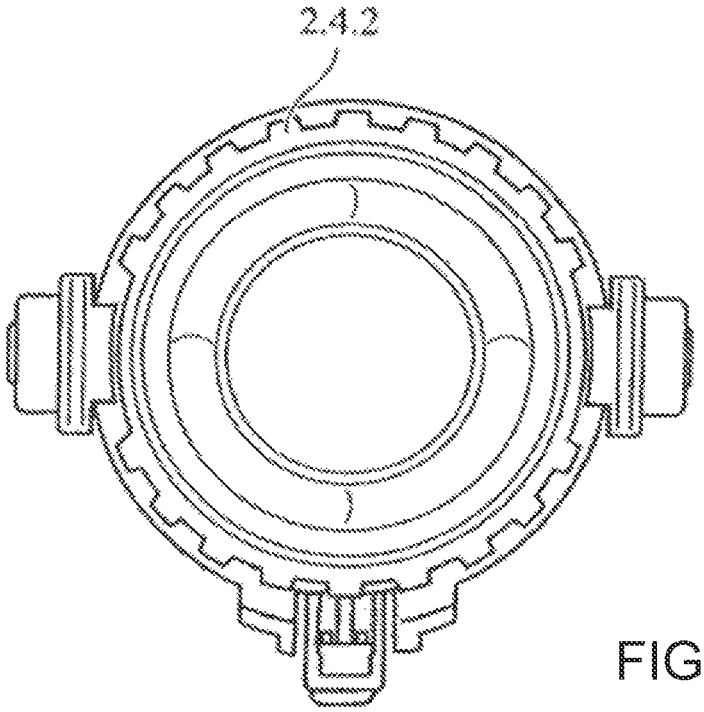

FIG. 17B

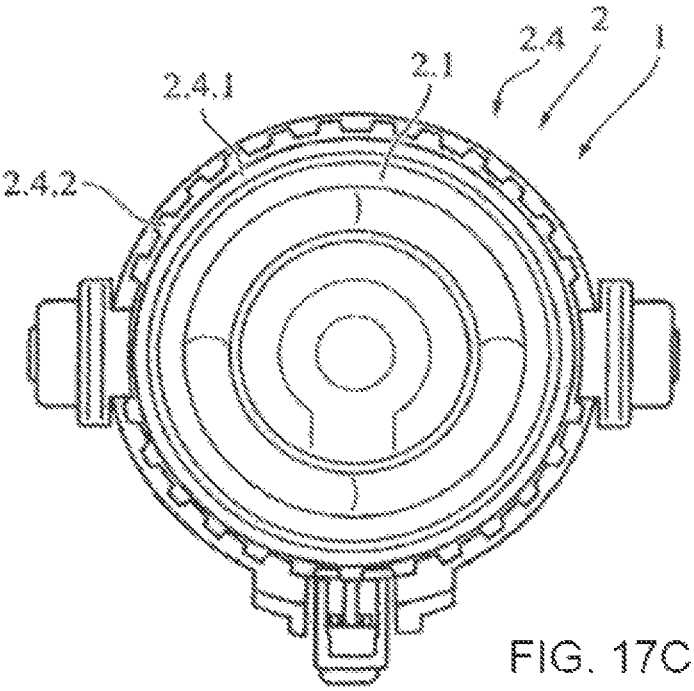

FIG. 17C

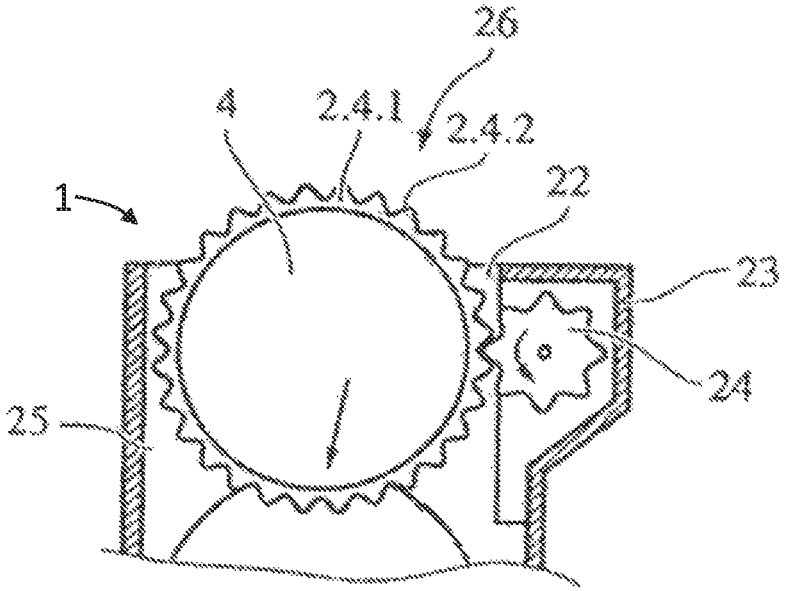

Fig. 18

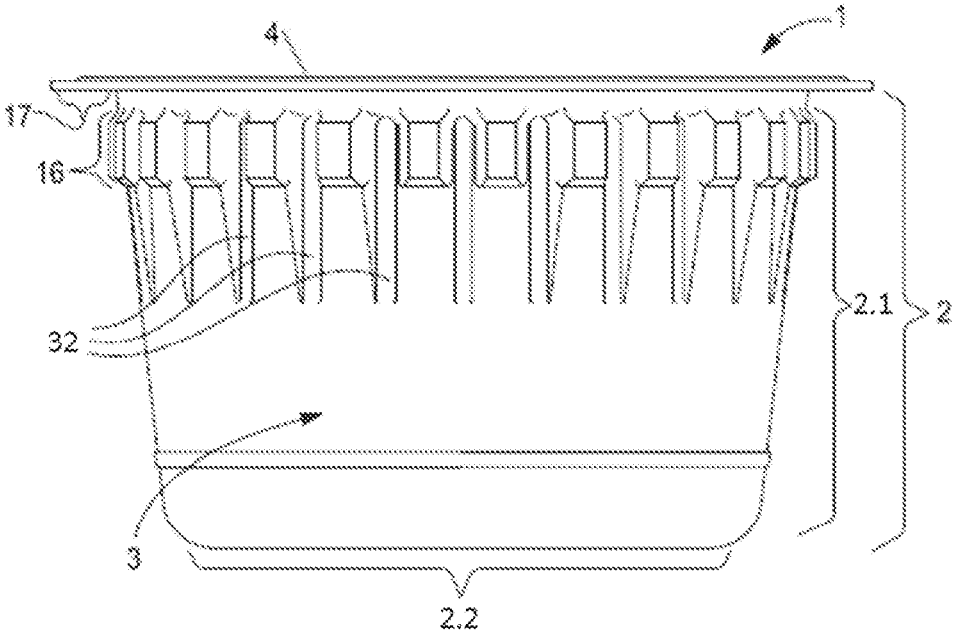

Fig.19

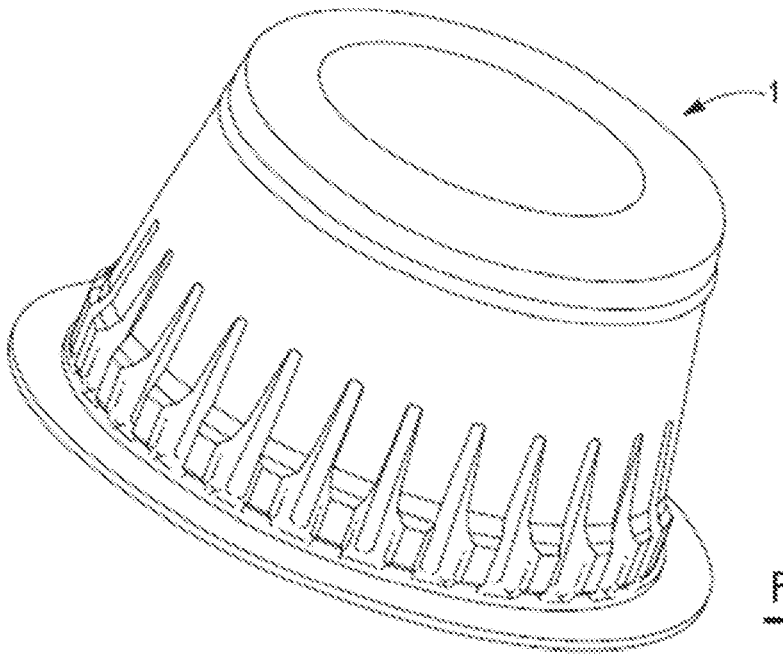

Fig.20

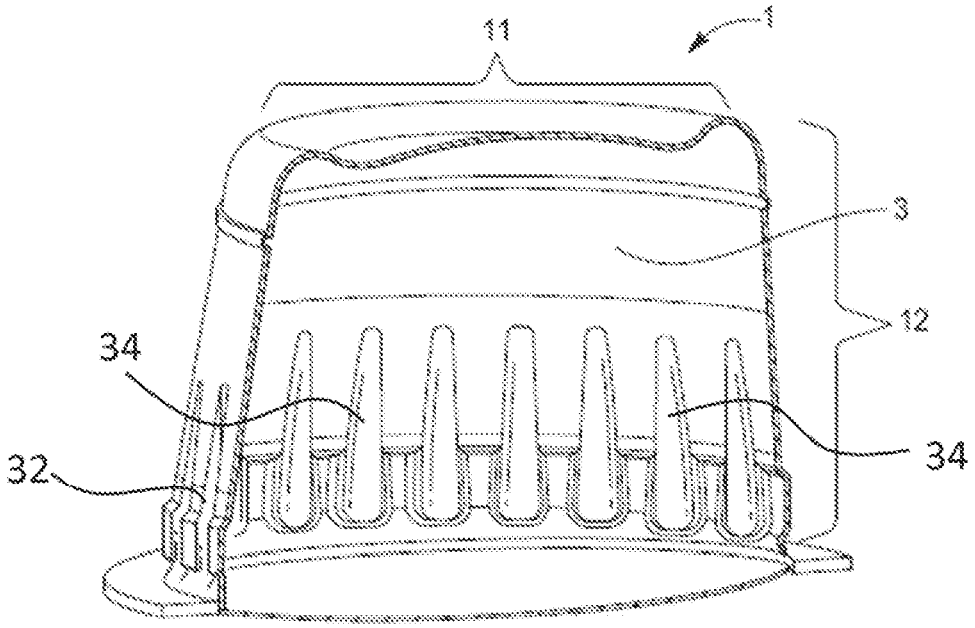

Fig.21

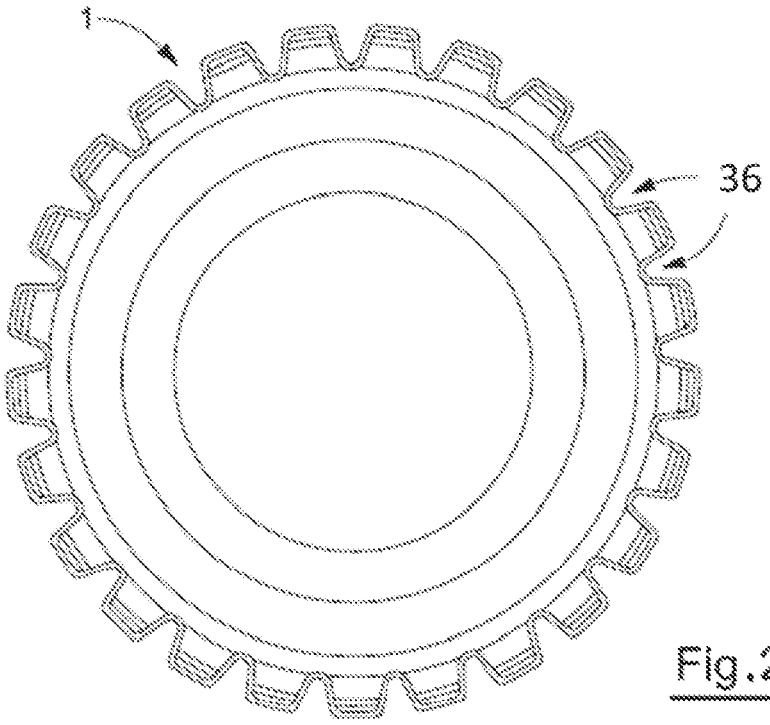

Fig.22

PORTION CAPSULE HAVING AN IDENTIFIER

FIELD

These teachings relate to a beverage system for making a beverage that includes a portion capsule and a beverage machine.

BACKGROUND

The present invention relates to a portion capsule for producing a beverage, comprising a base element having a cavity in which a beverage raw material is provided and which is closed by a membrane fastened to the base element.

Such capsules are well known and are being launched onto the market in abundant variety. Since these capsules are often quite similar, it is possible that the manufacturer's capsules are used in a coffee machine designed by another manufacturer, although they are not suited for it. This may result in significant security issues and/or the coffee machine may be damaged.

The object of the present invention is therefore to provide a portion capsule which only is suitable for a specific coffee machine.

SUMMARY

The object is accomplished according to the present invention by a portion capsule for producing a beverage, comprising a base element having a cavity in which a beverage raw material is provided and which is closed by a membrane fastened to the base element, wherein it has an identifier, which allows to individualize the respective portion capsule.

The present invention relates to a capsule for producing a beverage or foodstuff, comprising a base element having a cavity in which a beverage raw material is provided. Such capsules are, for example made of plastic, natural materials and/or biodegradable materials and substantially have a base element, in particular a deep-drown base element, i.e. it is substantially designed frustoconically or cylindrically. The beverage raw material is arranged within the portion capsule's cavity and is extracted and/or dissolved in a liquid, in particular water. After the beverage raw material has been filled into the cavity the base element is usually sealed by a membrane. In particular the membrane is localized on the opposite side of the base element's bottom. The membrane can be made of the same or different material as the base element and is substantially attached to the base element using a sealing and/or an adhesive bonding. Additionally, the cavity could contain one or several built-in elements, such as, for example a filter, a non-woven, a felt, a shut-off device and/or something similar to those. For the case that a non-woven and a felt are arranged within the cavity, they are interconnected preferably. The non-woven and/or the felt can be made of several layers in such a way that the layers may differ in the kind of its starting material and/or its preparation. Moreover, the membrane and/or the bottom can be provided with a plurality of recesses (holes).

According to the present invention, it is provided that the portion capsule has an identifier that allows to individualize the respective portion capsule. In the context of this invention individualizing means that the respective portion capsule can be assigned to a group of capsules that are suitable for the coffee machine preferably. It is not necessary that the coffee machine is able to specify and/or identify the portion

capsule. In fact, it is much more important that the coffee machine associates the portion capsule with a group of portion capsules, which is suitable for the coffee machine. In particular, individualizing means that those portion capsules that are not appropriate for the coffee machine cannot be inserted into and/or directly fall through the holder, which is designed for the portion capsules in the coffee machine, and/or the coffee machine operates only with the corresponding portion capsules. Preferably a sensor/detection system handles the identifier and compares it with a stored reference substantially. Preferably, the coffee machine, in particular the water-providing-pressure pump, will be activated if the detected identifier matches with the reference. Otherwise, the coffee machine will not start operating. Preferably the detection system is placed in the region of the coffee machine's media chute designed for the portion capsules. According to another preferred embodiment of the invention, the detection system may be placed in the region of the brewing chamber. Another possible embodiment of the invention provides that the identifier prevents portion capsules from inserting into the coffee machine. Alternatively, or additionally, means, in particular mechanical means, more preferably, one or more gearwheels, may be added to the media chute in order to guarantee that incorrect portion capsule cannot be inserted into the coffee machines by passing the media chute.

Preferably, the identifier is composed of surface areas having different optical properties, for example reflection. These surfaces may be localized on the membrane, the side wall and/or the bottom of the portion capsules. Preferably, the portion capsule has at least two areas which differ in their optical properties, for example the reflection characteristics.

The detection of a recess and/or a bulge is also preferred. Preferably, recess and bulges alternate and/or at least two recesses or bulges are separately placed from each other. Especially it is possible that the recess and/or the bulge form a gearwheel that is attached to the outer border and/or at least partially extends to the wall region of the portion capsule. The recess and/or bulge may be produced by any shaping method, for example by deep drawing, preferably.

Furthermore, the recess may be realized by removing material. In particular, the material's removal can be accomplished by punching or using a laser on condition that this processing does not damage a barrier layer placed in the portion capsule's material, which prevents moisture or aroma from escaping out of the portion capsule and/or water vapor or oxygen enters the capsule. The reading of the identifier, which is encoded in the recess and/or bulge, may be a result from a mechanical and/or optical method, for example. Alternatively, or additionally, the identifier can be used to avoid that the portion capsule is inserted into the coffee machine. This applies in particular to the media chute. For example, it is possible to design a portion capsule comprising a ring gear that is placed on its circumference and is compatible with another ring gear, which is placed in the media chute. If the media chute's ring gear only revolves for a corresponding ring gear of the portion capsule and its revolving allows the portion capsule to pass, only portion capsules equipped with the proper ring gear will pass the insertion lock.

According to a further subject matter of a preferred development of the present invention, the identifier may be included in the membrane. Preferably, the identifier is a layer or partial layer of the membrane. Such identifiers may be an optically detectable material, for example a fluorescent material. Furthermore, the identifier may be designed with

layers made of metal or ferrous metal or stripes made of metal or ferrous metal in or on the membrane, respectively.

Preferably the identifier is a machine-readable imprint. This is realized with a print in food approved color, preferably. Fluorescent materials like paper or print materials, whose optical properties change under the influence of temperature, are favored also. Preferably the print is a barcode, a logo or a repeat pattern.

According to a further subject matter of a preferred development of the present invention, the identifier is an electrically conductive section, which can be placed all over the portion capsule, but is localized on the side wall, the edge and/or the floor preferably. The electrically conductive section, which is inserted into the coffee machine, can become part of an electric circuit, and causes therefore a measurable change, which leads to the identification of the respective portion capsule. In a further preferred embodiment, the identifier is a section made of a ferromagnetic material.

Another construction version favors a RFID chip being the identifier.

If the portion capsule is customized according to the invention, portion capsules that are not in line with the coffee machine will be prevented from inserting into the coffee machine. Furthermore, it is possible that the identifier allows to identify the portion capsule located in the brewing chamber in such a way that the production process of beverage or food may be controlled, for example by adjusting the temperature, the pressure and/or the amount of water.

According to a further subject matter of a preferred development of the present invention, the portion capsule's material is weakened in the bottom area caused by a selective material removal, for example by using a laser. The weakening is provided for piercing the portion capsules using a mandrel. This procedure is needed for the beverage's preparation. Since the material is weakened in the section, which is treated with a laser and is supposed to be pierced using the mandrel, the degree of necessary force for piercing the portion capsule is reduced. The mandrel of such coffee machines is usually equipped with a force limitation that limits the force, which is dedicated for pressing the mandrel against the portion capsule's bottom. This preparation avoids that portion capsules having no appropriate weakening can be used in such a coffee machine. Consequently, the weakening represents another kind of identifier.

According to a further subject matter of a preferred development of the present invention, the portion capsule has an edge region, which is preferably attached to the base element. Preferably, the edge is located opposite of the base element's bottom area. After the raw material has been filled in the portion capsule, a membrane can be attached to this edge region, for instance. Moreover, the edge can also designed for guiding the portion capsule into the chute in order to position the portion capsule in the brewing chamber properly. Simultaneously, it is possible to use the surface of the edge for stopping and/or sealing.

Preferably provision is made for the portion capsule to have means for fit locking, friction locking and/or detection in the edge region. The means for fit locking and/or friction locking may be used to activate a complementary mechanism, which is located in the coffee machine, in order to allow inserting the portion capsule into the coffee machine and/or starting a sensor, like a gearwheel, that transmits a signal to a control unit depending on whether the portion capsule corresponds to the coffee machine or not. Alternatively, or additionally, a detector may identify the mean for fit locking, friction locking and/or detection in order to check that the portion capsule is suitable to the respective coffee machine.

Preferably, the means for fit locking, friction locking and/or detection is a gearwheel or a gearwheel segment, which are located, in particular, in the outer area of the edge region. The teeth of the gearwheel or the gearwheel segment may be shaped in any commonly used form, which is known, for example, by an expert from gear manufacturing. Preferably, it is provided that these teeth are triangular, rectangular, square, or wavy.

Preferably, there is a sealing surface, that is arranged on the interior side relative to the gearwheel or the gearwheel segment.

Another and preferred state-of-the-art technology is a portion capsule for producing a beverage, comprising a base element substantially designed frustoconically or cylindrically, having a cavity in which a beverage raw material is provided and which is closed by a membrane fastened to the base element with the base element having a wall region and the base element having a bottom area, which is preferably located opposite to the membrane, with the wall region having several grooves and the grooves which are located between membrane and bottom area covering the wall region along its height at least partially. The grooves may be also located in the edge region, in particular on the outer area of the edge region.

This portion capsule has the advantage over the portion capsule according to the state-of-the-art technology that, for instance, the grooves reinforce the base element's wall region. On the one side, these grooves make the portion capsule more stable towards mechanical forces and prevent the portion capsule from deformation and buckling, in particular. The arrangement of the grooves, which are located at the wall region, additionally improves the performance of the portion capsule while the extraction liquid flows through it in the brewing chamber, since the arrangement of the grooves, in particular those partially expending over the wall region between membrane and bottom area, increase quality and reliability of the extraction process significantly. According to the invention another advantage is that the base element's thickness can be reduced, because the use of grooves improves the physical stability. The production of the portion capsule is therefore much less expensive and more environmentally friendly. On the other side, the grooves reduce or avoid the contact between the portion capsule's wall region and the wall of the brewing chamber. As a result, ejecting or removing the portion capsule from the brewing chamber is made easier. Another advantage of using a plurality of grooves is that the stream of the extraction liquid, which flows along the base element in the cavity, can be optimized by choosing a grooves' structure that is able, for example, to generate on the one hand a better or stronger turbulence in the extraction liquid or on the other hand a more uniform (laminar) flow of the extraction liquid, in the wall region. The control of the liquid may be obtained by the structure of the grooves itself or by using simple means additionally. A stronger turbulence compared to the one known in the state-of-the-art has the advantage that no unintended and casual main streams are formed in the raw materials. Instead, the extraction liquid equally flows through the raw material in all of the volume. Thus, the extraction process is much more efficient and can be controlled more precisely and reproducibly.

In particular, the raw material may be coffee powder (especially ground roasted coffee), chocolate powder, milk

powder, tea, or the like. Alternatively, it is conceivable that the raw material is a beverage's extract, such as instant coffee for example.

In particular, the grooves are recesses and bulges, which are preferably directed along a main extension and are preferably extended along the wall portion or the periphery of the edge region. More preferably, the grooves are formed as webs and/or notches. A gearwheel, for instance, may be obtained by the grooves. Therefore, the grooves are part of the base elements' wall, optionally located on the inner side facing to the cavity and/or on the outside facing away from the cavity.

According to a preferred embodiment of the present invention, it is provided that the grooves form an identifier that allows individualizing the portion capsule. In the context of this invention individualizing preferably means that the respective portion capsule can be assigned to a group of capsules that are suitable for the respective coffee machine or the machine producing a beverage. It is not necessary that the coffee machine or the device for producing a beverage is able to specify and/or identify the portion capsule. It is more important that the device for producing a beverage, in particular a coffee machine, associates the portion capsule with a group of portion capsules, which is appropriate for the respective device for producing a beverage, in particular a coffee machine. In particular, individualizing means that those portion capsules that are not appropriate for the coffee machine (or the device producing the beverage) cannot be inserted into and/or directly fall through the holder, which is designed for the portion capsules in the coffee machine (or the device producing the beverage), and/or the coffee machine (or the device producing the beverage) operates only with corresponding portion capsules ("proper portion capsule"). In particular, individualizing means that the coffee machine or the device producing the beverage will not operate properly in the intended use, if the used portion capsule is not customized according to the invention. Preferably, a sensor/detection system, attached to the coffee machine or the device producing the beverage, records the identifier and substantially compares it with a stored reference. In particular, it is possible that such an identification process is based on a mechanical fitting, especially a fitting of a gearwheel or of a contour comparable with a gearwheel, which is attached to the device producing the beverage or the coffee machine and interacts with the portion capsule. It is preferred that the device for producing the beverage or the coffee machine only will operate, if the identifier matches to the reference or the mechanical fittings match with each other. In this case the device for producing the beverage particularly starts to operate, especially activates a pressure or water pump. The mean for detection or mechanical fitting is preferably located in the region of the media chute or in the region of the device for producing the beverage. Alternatively, the identifier or the mechanical fitting may avoid that an unsuitable portion capsule is inserted into the device for producing the beverage. A portion capsule, which is designed in accordance with the invention, makes it possible that a portion capsule that is not designed for the device for producing a beverage cannot be inserted into it. Additionally, the identifier allows that the device for producing the beverage, especially the coffee machine, may specify the sort of the portion capsule and thereby control the production process of beverage and food by adapting, for example, the pressure, the temperature and/or the amount of water.

According to a further preferred embodiment of the present invention, it is provided that at least a part of the grooves and at least in a subarea parallel to the main plane of the membrane is gearwheel shaped.

According to the present invention, it is an advantage that it is possible to increase the stability of the portion capsule's wall region, to realize improved turbulences of the extraction liquid and thereby to improve the extraction's process under the same conditions, for example, such as material thickness and the like. Another advantage is that it is easy to generate a mechanical identifier or a mechanical fitting that matches with a fitting tool that belongs to the device for producing a beverage. According to the invention it is an further advantage that, for example, a gearwheel, which is attached to the device for producing a beverage and is, for example, located in the region of the media chute or similar, can possibly interacts with the gearwheel's contour of the portion capsule. In this way it is possible to generate a mechanical fitting that allow to individualize the portion capsule as a proper one and/or to specify the sort of portion capsule and/or to rotate the portion capsule about an axis of rotation, that is perpendicular to the membrane's main plane, by using the gearwheel's arrangement. Such an embodiment of the invention makes it possible that the portion capsule is always opened with the device for producing a beverage on the same spot (with respect to its angular position) and therefore the raw material is extracted on the same manner. Moreover, the grooves prevent the portion capsule from being inserted into the coffee machine.

In a preferred version of the invention, it is provided that there is a flange/edge region being averted from the bottom region, for fixing the membrane to the base element, where in the wall region between flange/edge region and bottom region preferably has a border and the grooves are being preferably extended to this border.

Because of this it is another advantage according to the invention that on the one hand the wall region can be constructed in a stable and reinforced manner and on the other hand the gearwheel shaped contour of the grooves, located at the wall region, is able to absorb a relative high load. With that it is possible that the portion capsule can be rotated easily and without any damaging of the portion capsule within the device for producing a beverage.

Preferably, the base element's diameter is enlarged in the border's region compared to the wall region, which range from the border to the bottom region.

This gives rise to the advantageous possibility to stack portion capsule or portion capsules' base elements easily and robustly.

Moreover, it is preferred that at least a part of the grooves are gearwheel shaped and at least a plane, which is at least partially gearwheel shaped, is parallel to the membrane in such a way that the gearwheel shaped contour expands over the borders or the flange/edge region.

Further preferred versions of the present invention relate to portion capsules that implement one or more of the following characteristics:

- the base element tapers in the direction of the flange in the border's region,
- the grooves directed toward the bottom region expand over the border's region,
- the grooves approximately cover 20%-80%, preferably 40%-60% of the wall region, which is placed between the border and the bottom region,
- the grooves are constructed in such a way that the wall region is reinforced and/or the grooves causes an extraction liquid's turbulence in the cavity.

Other preferred versions of the present invention relate to portion capsules that are manufactured in such a way that the

ratio of the diameter of that wall region of the base element which adjoins the flange to the diameter of the flange is between 0.85 and 0.89, and in particular substantially 0.87.

In a preferred version, the wall region's diameter, which is adjacent to the flange, is 39 millimeters and the flange's diameter is 45 millimeters. Another advantageous version of the invention prefers a base element having a thicker wall region in the border's region compared to the wall region between bottom region and flange. Since the portion capsule's design, which contains grooves in the wall region, improves its stability, it is possible to save material by manufacturing the portion capsule and therefore to reduce cost and energy required for manufacturing the portion capsules.

According to the invention it is further provided that a filter element is arranged into the cavity. Such a filter element divides the cavity into a first region for accommodating the beverage raw material and into a second region for accommodating a beverage extract. In particular, it is provided that the filter element is made of a non-woven material.

According to a further subject matter or a preferred development of the present invention the portion capsule according to the invention is intended for the preparation of a hot beverage. In the following the invention is explained based on the FIGS. **1**-**22**. These explanations do not restrict the general idea of the invention.

BRIEF DESCRIPTION OF THE DRAWINGS

FIGS. **1**A and **1**B show a portion capsule containing sections that differs optically.

FIGS. **2**A, and **2**B show a portion capsule containing a barcode.

FIGS. **3**A and **3**B show a portion capsule with recesses and bulges.

FIG. **4** shows a portion capsule containing sections that differs optically.

FIG. **5** shows a portion capsule with a key function.

FIG. **6** shows a portion capsule's wall that is electrically conductive.

FIG. **7** shows a portion capsule's wall containing sections that differs optically.

FIG. **8** shows an enlarged pot construction of the portion capsule's wall.

FIG. **9** shows an edge region that is electrically conductive.

FIG. **10** shows a portion capsule containing a bottom that is electrically conductive.

FIG. **11** shows an embodiment containing a layer that can be detected by a metal detector.

FIG. **12** shows a metallic strainer.

FIG. **13** shows a portion capsule containing a ferromagnetic section.

FIG. **14** shows a portion capsule containing a barcode.

FIG. **15** shows a portion capsule containing a section, which is electrically conductive, in the wall.

FIGS. **16**A and **16**B show a portion capsule with a gearwheel placed in the brewing chamber.

FIGS. **17**A, **17**B, and **17**C show different embodiments of the portion capsule according to FIGS. **16**A and **16**B.

FIG. **18** shows the portion capsule according to the FIGS. **16** A and **16**B and FIGS. **17***a-c*, when the portion capsule is fit locking with a gearwheel.

FIGS. **19** and **20** show a schematic view of a portion capsule according to an embodiment of the presented invention.

FIGS. **21** and **22** show two sectional views of the portion capsule according to an embodiment of the presented invention.

DETAILED DESCRIPTION

FIGS. **1**A and **1**B show a portion capsule **1** comprising a base element **2** that has a wall region **2.1** and a bottom area **2.2**. The wall region **2.1** and the bottom area **2.2** define a cavity **3**, which may include the raw material and perhaps a built-in element. After filling, the cavity **3** is sealed by a membrane **4**, which is preferably attached to the edge region **2.4** of the base element using seal or glue. This portion capsule can be inserted into a brewing chamber **12**, with a liquid, in particular water, flowing through it. During this process, the raw material is extracted or dissolved and therefore the beverage is produced. According to the invention the portion capsule has only one identifier that allows to determine whether the respective portion capsule goes with the coffee machine's brewing chamber **12** and the parameters for processing are chosen properly. If it is not the case, significant security issues arise. Inserting the wrong portion capsule, for example, endangers the brewing chamber's tightness. In this case hot water can be discharged under high pressure and therefore compromise the user's safety. Otherwise, it is also possible that inserting the wrong portion capsule damages the coffee machine. In this example the identifier is represented by several raised areas **8**, which differ in reflection properties from the sections between the raised areas. As shown by the arrows the bulges are passed by a mean for detection **13** (here: an optical detector) that is able to differentiate between the unequal sections **5**, **6** having different optical properties such as, for example, reflection. Switching between the different sections or the number of bulges represents the identifier. After the identifier has been read out the identifier is compared to a stored reference. If the identifier agrees with the reference, the coffee machine will start operating. Particularly the pump, which is for example responsible for pushing hot water through the brewing chamber, will not start operating, if the identifier does not agree with the reference.

All the remarks concerning the identifier apply to all the examples.

FIGS. **2**A and **2**B show another embodiment of the portion capsule **1** according to the invention. The portion capsule **1** comprises a base element **2** that has a wall region **2.1** and a bottom area **2.2**. Here the portion capsule **1** has a barcode **50** placed in the area of the membrane's **4** top surface. This barcode may be printed by material removal or may be generated by a medium that is integrated in the foil and can be detected optically such as a fluorescence agent. Alternatively, metal rings may be part of the foil or attached to the foil. The barcode's section may be made of a ferromagnetic material. As shown by the arrow **15** the barcode **50** alternatively can be attached to the base element's edge region being averted from the membrane **4**. Such a barcode is read out by a detector **13** placed, for example, in the media chute. The barcode represents the identifier according to invention.

FIGS. **3**A and **3**B show another embodiment of the portion capsule **1** according to the invention. In the present case the identifier comprises recesses and bulges **7**, **8**, which result from material removal or reshaping the portion capsule as shown here by the example of the portion capsule's wall **2.1**. In the present case, recesses and bulges interact with a means for detection **13**, which operates like a key, wherein the coffee machine only start operating, when all

elements **14** are placed in the respective recess **7**. Therefore, an electric circuit may be changed or especially closed.

FIG. **4** shows an embodiment of the portion capsule being substantially identical to the embodiment illustrated in FIG. **1**. As an alternative version of the invention, the figure additionally shows that the unequal sections **5**, **6** differing in terms of optical properties can be attached to the cover foil, for example in the form of a barcode.

FIG. **5** shows an embodiment of the portion capsule being substantially identical to the embodiment illustrated in FIGS. **3**A and **3**B that includes recesses **7** and bulges **8**. Again, the recesses represent the key bit. The coffee machine only will start operating, if the recesses interact with the corresponding bulges and therefore an electric circuit is changed respectively. The placement of such a system is not restricted to the brewing chamber. For instance, the system may be placed in the portion capsule's media chute.

FIG. **6** shows a version of the invention that includes a base element **2** and an electric material forming a surrounding ring **2.3**, which preferably has a raised form. The electrically conductive material is scanned by means for detection **13** having electric sliding contacts, which are placed in the media chute and form electric contacts of an electric circuit, while the portion capsule is inserted.

FIG. **7** shows an embodiment of the portion capsule being substantially identical to the embodiment illustrated in FIG. **6**, in which it is provided that the ring area has reflective **21** or mat **22** sections, for example in form of a covering, and allows a read-out by means for detection **13** for optical detection, which are placed in the media chute and are part of a control current, while the portion capsule is inserted.

FIG. **8** shows a relative broad and raised ring **2.3** which represents the identifier. The media chute is equipped with a corresponding vacancy that tests whether the portion capsule has the proper identifier. The broad ring is scanned, for example, by means for detection **13** having mechanical sensors, which are placed in the media chute and close the contacts of an electric circuit, while the portions capsule is inserted.

FIG. **9** shows another embodiment of the portion capsule according to the invention. In the present case an electrically conductive coat **10** is integrated in the edge region's back and is scanned by electric sliding contacts, which are placed in the media chute and form electric contacts of an electric circuit, while the portion capsule is inserted.

FIG. **10** shows another embodiment of the portion capsule according to the invention. In the present case the portion capsule has an electrically conductive coat **10** at the bottom area **2.2** such as a conductive varnish layer or an aluminum foil. The coat is scanned by means for detection **13** having electric sliding contacts, which form electric contacts of an electric circuit, while the portion capsule is inserted.

FIG. **11** illustrates a version of the portion capsule having also an electrically conductive coat **10** that is placed on its bottom **2.2** and is identified by a means for detection **13** having a metal sensor, which is placed in the chute and, for example, detects inductively, while the portion capsule is inserted.

The embodiment of the invention shown in FIG. **12** has a built-in element made of metal (here a strainer **19**) that is recognized as identifier by a means for detection **13** having a metal detector.

The version of the invention shown in FIG. **13** includes a ferromagnetic material **20** placed at the portion capsule' bottom. The identifier is scanned, by means for detection **13** for example, by a magnet, which is placed in the chute, while the portion capsule is inserted. The ferromagnetic material acts as identifier.

FIG. **14** shows another embodiment which includes a barcode placed in the region of the cover foil. The portion capsule includes a flange **17**.

According to the embodiment shown in FIG. **15** a metallic ring **11** is integrated in the wall region **2.1** and closes means for detection **13** having an electric circuit placed in region of the brewing chamber.

FIGS. **16**A and **16**B show another embodiment of the portion capsule **1** according to the invention. The illustrated portion capsule features a base element **2** that is basically conical-shaped in the present case and has a bottom region **2.2** and a wall region **2.1**. It is provided that the base element contains the raw material and, if necessary, build-in elements like a filter as illustrated here. The expert knows that the build-in element may also include other build-in elements. A flange **17**/edge region **2.4**, which is preferably circular and, for example, may be used for sealing a cover foil **4** to it, is attached to the end of the base element, which is placed opposite to the bottom. The flange/edge region has means for fit locking, friction locking and/or detection **2.4.2** in the outer area (outer circumference). As especially shown in the FIGS. **17***a*-**17***c* the means for fit locking, friction locking and/or detection **2.4.2** is, in the present case, a gearwheel that is formed by several recesses/bulges evenly arranged in the edge region. Preferably, it is provided that the edge region has a sealing surface **2.4.1**, which sealingly interacts with the seal **31** attached to the brewing chamber **12**, on the interior side of the gearwheel. The sealing **31** makes sure that the water coming from a water inlet **28** flows through the portion capsule by passing an opening, which has been made by a mandrel **29**, than around it.

FIGS. **17**A, **17**B, and **17**C show different embodiments of the means for fit locking, friction locking and/or detection **2.4.2**. According to the version shown in FIG. **17**A, the gearwheel has forty-five teeth. According to the version shown in FIG. **17**B or **17**C, the gearwheel has twenty-two or twenty-nine teeth, respectively. The expert knows that the manufactured teeth can be shaped arbitrarily. All FIGS. **17**A, **17**B, and **17**C demonstrate how the portion capsule **1** can be held by a part of the brewing chamber **12** using two holding arms **30**. The holding arms interact with the means for fit locking, friction locking and/or detection **2.4.2**. If they are not available, the holding arms will not hold the portion capsule and the portion capsule will not be inserted into the brewing chamber and will fall through it into a dropping box instead. The portion capsule has a base element **2**, a wall region **2.1**, a bottom area **2.2**, a sealing surface **2.4.1**, and an edge region **2.4**.

FIG. **18** shows the means for fit locking, friction locking and/or detection **2.4.2** along with mean for fit locking **24**, which is attached to the coffee machine and is represented by a pinion here. It is provided that the mean for fit locking **24** is placed in the media chute or insertion shaft **26** of an insertion shaft housing **23** having a port for inserting the portion capsule in the coffee machine. The distance between the inner wall **25** of the portion capsule **1** and the mean for fit locking **24** represented by the pinion **24** are designed in such a way that the portion capsule only will pass the port, if the means for fit locking, friction locking and/or detection **2.4.2** is formed complementary to the teeth of the mean for fit locking **24** represented by the pinion. Only in this case the portion capsule rotates the mean for fit locking **24** represented by the pinion **24** while it falls. Both rotating and falling are represented by arrows in the figure. The portion

capsule needs the rotation for passing the media chute's port and falling in the intended position afterwards. If the portion capsule has no or wrong mean of fit locking, it will be impossible to place the portion capsule by passing the media chute in the intended position. Additionally, or alternatively, it is provided that the mean for fit locking **24** represented by the pinion has a pick-up that detects the rotary movement and transmits it to a control unit. If the rotation at least corresponds a defined rotating element, the control unit will activate, for example, the brewing unit. The expert knows that the portion capsule's border may include means for friction locking that interacts with a mean, for example an edge, and shift it in such a way that the shift is detected and therefore the brewing chamber is activated. The portion capsule **1** has a cover foil **4** and a sealing surface **2.4.1**.

The expert moreover knows that a sensor, being for example a camera, which detects the form of the means for fit locking, friction locking and/or detection **2.4.2**, may be installed in the media chute. In the present case the form and/or the distance between the teeth may be detected. If the proper portion capsule was inserted, a resulting signal could be transmitted to a control unit, which activates the brewing chamber.

FIG. **19** schematically shows a view of another portion capsule's version according to an embodiment of the present invention. FIG. **20** illustrates the same portion capsule from a different point of view schematically. FIG. **19** shows the front view of the portion capsule. FIG. **20** shows the portion capsule viewed from an angle below. In all figures the portion capsule is labeled with the reference sign **1**. The portion capsule substantially has a frustoconically shaped base element **2**, which is formed similar to a pot and encloses a cavity **3**. The cavity **3** is sealed by a membrane **4**. Since the viewing direction of FIG. **19** is essentially parallel to the plane, in which the membrane is located, the membrane is at the upper edge of the portion capsule. In particular, the base element **2** comprises a soft, semi-rigid or rigid plastic material which is deep-drown, preferably. The membrane comprises a foil made of plastic material or aluminum. Preferably the base element has a circumferential mounting flange **17** in the region of the membrane, with the membrane and the mounting flange **17** being firmly bonded, in particular by welding or gluing. Preferably a filter element, which is not specifically depicted in the figures, is placed within the base element **2**. For instance, the filter element is made of thermoplastic resin such as, for example, polypropylene. The filter element could also be made of a non-woven material such as, for example, thermoplastic resin. Preferably the filter element divides the cavity **3** in two sections. It is provided that the first section can be filled with a raw material and the second section can be filled with and particularly collect a beverage's extract, which is not shown, during the extractions process. Both sections are not illustrated individually.

The portion capsule is intended for inserting into a brewing chamber or a device for producing a beverage, which is not shown here. In particular such a device for producing a beverage is a coffee machine. The device for producing a beverage could be also a machine that produces a tea drink, a chocolate drink or any other beverage. Preferably an extraction liquid, which is particularly water or hot water, is brought under high pressure into the brewing chamber of the device for producing a beverage. The extraction liquid interacts with the raw material of the beverage in such a way that an extract of a beverage or a beverage is generated. In particular the filter element is utilized as a strainer for the extract of a beverage.

According to the invention, the base element **2** has a wall region **2.1** and a bottom area **2.2**. The wall region **2.1** basically ranges from the flange **17** to the bottom region **2.2**. Several grooves **32** are placed in the wall region. In particular these grooves are keyways that are integrated in the wall region **2.1** and are facing the cavity **3** and range from the flange **17** to the bottom region **2.2** (i.e. they run perpendicular according to FIG. **19**). According to the invention provision is made for the grooves **32** to be extended vertically across the wall region, i.e. they run straight from the flange **17** to the bottom region **2.2**, in which it is not necessary that they are extended over the whole length. The grooves are formed according to the invention in such a way that the wall region is reinforced or stiffened due to the grooves **32**. Moreover, the plurality of the grooves **32**, which are distributed over the wall region **2.1**, realize an adhesion between wall region **2.1** and the brewing chamber's wall of the device for producing a beverage after the extraction process. This makes it easier to eject the portion capsule from the brewing chamber automatically. The portion capsule's version represented in FIG. **19** comprises a circumferential border **16** that is placed at the wall region **2.1** ranging from the flange **17** to the bottom area **2.2**, namely adjacent to the flange **17** facing towards the bottom area **2.2**. The border **16** has an enlarged diameter (parallel to the membrane **4**) compared to the wall region's ranging from the border **16** to the bottom area **2.2**. It is provided that the border's contour **16** is designed in such a manner that the border's diameter tapers towards the flange **17**.

It is provided according to the portion capsule's embodiment, which is represented in FIG. **19** and is in accordance with the invention, that the grooves **32** are placed in the border's region in the first part, partially range from the border **16** to the bottom area **2.2** across the wall region **2.1**, in the second part and then finally end. All in all, the grooves cover, for example, around 50% of the extension of the wall region **2.1**, which ranges from the flange **17** to the bottom area **2.2**, wherein one-third of the grooves' extension is placed in the border's region and two-thirds of the grooves' extension is placed in the remaining wall region **2.1** that range from the border **16** to the bottom area **2.2**.

A portion capsule **1** according to the invention is shown as sectional view along the portion capsule's extension regarding its height in FIG. **21**, i.e. the section's plane is perpendicular to the membrane's main plane. FIG. **22** also shows a portion capsule according to the invention in a sectional view portraying the sectional plane, which is parallel to the membrane's main plane. It is noticeable that the interior of the portion capsule's cavity is shown in FIG. **21**. The portion capsule's material or the base element's material is so thin that the implementation of grooves **32** at the exterior shown in FIG. **19** leads to corresponding convexities **34** and impressions at the interior. FIG. **22** particularly illustrates the gearwheel shaped contour **36** resulting from insertion of grooves in the portion capsule's **1** wall region.

LIST OF REFERENCE NUMERALS

1 portion capsule
2 base element
2.1 wall region
2.2 bottom area
2.3 ring
2.4 edge region
2.4.1 sealing surface
2.4.2 means for friction locking and/or detection

3 cavity
4 membrane, cover foil
5,**6** unequal sections
7 recess
8 raised area, bulge
10 electrically conductive coat
11 metallic ring
12 brewing chamber
13 detector, mean for detection
14 beam
16 border
17 flange
20 ferromagnetic material
21 reflective section
22 mat section
23 insertion shaft housing
24 mean for fit locking
25 inner wall
26 insertion shaft
28 water inlet
29 mandrel
30 holding arms
31 seal
32 grooves
34 convexities
36 gearwheel shaped contour

The invention claimed is:

1. A portion capsule for making a beverage comprising:

a base element having a cavity in which a beverage material is provided, the base element including a wall that is symmetrical about a central longitudinal axis thereof and having an open end and a closed bottom portion, the base element has a first height that is defined between the open end and the closed bottom portion, the wall has an outside surface and an inside surface which faces the beverage material;

a plurality of indentations arranged on the outside surface of the wall, about the central longitudinal axis;

a ledge formed at the inside surface of the wall and projecting towards the central longitudinal axis, the ledge is spaced below the open end of the base element;

a rim at the open end of the base element, the rim having a top surface and an opposing bottom surface;

an optically detectable individualization identifier, which is carried by the bottom surface of the rim, the optically detectable individualization identifier includes surface areas having different optically detectable reflective properties, the optically detectable individualization identifier is configured to be read by a sensor/detector of a beverage machine to individualize the portion capsule and to activate a pump of the beverage machine;

a barrier layer to prevent moisture or aroma from escaping out of the portion capsule; and

a cover attached to the base element to close the cavity, the cover having a central region and a perimeter, the cover is bowed outwardly to a second height in the central region relative to the perimeter of the cover, the second height of the cover is less than the first height of the base element, the cover includes a piercing region that is configured to be pierced by a mandrel of the beverage machine at a location that is laterally offset from the central longitudinal axis and a sealing region that is configured to be sealed against by a seal of the beverage machine, the sealing region is located between the piercing region and the perimeter of the cover.

2. The portion capsule according to claim **1**, wherein the base element is made of metal, a biodegradable material, or plastic, the optically detectable individualization identifier is located on the wall of the base element, and the individualization identifier is circumferentially arranged around the central longitudinal axis.

3. The portion capsule according to claim **2**, wherein the plurality of indentations are vertically oriented, the inside surface of the wall of the base element comprises a plurality of ribs.

4. The portion capsule according to claim **2**, wherein the cover is connected to the top surface of the rim.

5. The portion capsule according to claim **4**, wherein the closed bottom portion comprises an indentation.

6. The portion capsule according to claim **4**, wherein the portion capsule includes a filter inside of the cavity.

7. The portion capsule according to claim **4**, wherein the portion capsule is free of a filter inside of the cavity.

8. A portion capsule for making a beverage comprising:

a base element having a cavity in which a beverage material is provided, the base element including a wall that is symmetrical about a central longitudinal axis thereof and having an open end and a closed bottom portion, the base element has a first height that is defined between the open end and the closed bottom portion, the wall has an outside surface and an inside surface which faces the beverage material;

a plurality of vertically-orientated indentations arranged on the outside surface of the wall;

a plurality of vertically-orientated ribs arranged on the inside surface of the wall;

a rim at the open end of the base element, the rim having a top surface and an opposing bottom surface;

an optically detectable individualization identifier, which is carried by the bottom surface of the rim, the optically detectable individualization identifier includes surface areas having different optically detectable reflective properties, the optically detectable individualization identifier is configured to be read by a sensor/detector of a beverage machine to individualize the portion capsule and to activate a pump of the beverage machine;

a barrier layer to prevent moisture or aroma from escaping out of the portion capsule; and

a cover sealed to the base element to close the cavity, the cover having a central region and a perimeter, the cover is bowed outwardly to a second height in the central region relative to the perimeter of the cover, the second height of the cover is less than the first height of the base element, the cover includes a piercing region that is configured to be pierced by a mandrel of the beverage machine at a location that is laterally offset from the central longitudinal axis and a sealing region that is configured to be sealed against by a seal of the beverage machine, the sealing region is located between the piercing region and the perimeter of the cover.

9. The portion capsule according to claim **8**, wherein the inside surface of the wall comprises a ledge projecting towards the central longitudinal axis, and the optically detectable individualization identifier is circumferentially arranged around the central longitudinal axis.

10. The portion capsule according to claim **9**, wherein the optically detectable individualization identifier is located on the wall of the base element, and the base element is made of metal, a biodegradable material, or plastic.

11. The portion capsule according to claim **10**, wherein the portion capsule includes a filter inside of the cavity, and the wall comprises an electrically conductive section.

12. The portion capsule according to claim **10**, wherein the portion capsule is free of a filter inside of the cavity, and the wall comprises an electrically conductive section.

* * * * *