(12) INTERNATIONAL APPLICATION PUBLISHED UNDER THE PATENT COOPERATION TREATY (PCT)

(19) World Intellectual Property Organization
International Bureau

(43) International Publication Date
1 September 2005 (01.09.2005)

PCT

(10) International Publication Number
WO 2005/079638 A1

(51) International Patent Classification[7]: A47J 31/06, 31/40

(21) International Application Number: PCT/GB2005/000469

(22) International Filing Date: 11 February 2005 (11.02.2005)

(25) Filing Language: English

(26) Publication Language: English

(30) Priority Data:
0403496.3 17 February 2004 (17.02.2004) GB

(71) Applicant (*for all designated States except US*): **KRAFT FOODS R & D, INC.** [US/DE]; Bayerwaldstrasse 8, 81737 Munich (DE).

(72) Inventors; and
(75) Inventors/Applicants (*for US only*): **PANESAR, Satwinder, Singh** [GB/GB]; Kraft Foods UK Ltd, Ruscote Avenue, Banbury, Oxfordshire OX16 2QU (GB). **CARTER, Steve** [GB/GB]; Kraft Foods UK Ltd, Ruscote Avenue, Banbury, Oxfordshire OX16 2QU (GB).

(74) Agents: **ALEXANDER, Thomas, Bruce** et al.; Boult Wade Tennant, Verulam Gardens, 70 Gray's Inn Road, London WC1X 8BT (GB).

(81) Designated States (*unless otherwise indicated, for every kind of national protection available*): AE, AG, AL, AM, AT, AU, AZ, BA, BB, BG, BR, BW, BY, BZ, CA, CH, CN, CO, CR, CU, CZ, DE, DK, DM, DZ, EC, EE, EG, ES, FI, GB, GD, GE, GH, GM, HR, HU, ID, IL, IN, IS, JP, KE, KG, KP, KR, KZ, LC, LK, LR, LS, LT, LU, LV, MA, MD, MG, MK, MN, MW, MX, MZ, NA, NI, NO, NZ, OM, PG, PH, PL, PT, RO, RU, SC, SD, SE, SG, SK, SL, SY, TJ, TM, TN, TR, TT, TZ, UA, UG, US, UZ, VC, VN, YU, ZA, ZM, ZW.

(84) Designated States (*unless otherwise indicated, for every kind of regional protection available*): ARIPO (BW, GH, GM, KE, LS, MW, MZ, NA, SD, SL, SZ, TZ, UG, ZM, ZW), Eurasian (AM, AZ, BY, KG, KZ, MD, RU, TJ, TM), European (AT, BE, BG, CH, CY, CZ, DE, DK, EE, ES, FI, FR, GB, GR, HU, IE, IS, IT, LT, LU, MC, NL, PL, PT, RO,

[Continued on next page]

(54) Title: AN INSERT, A MACHINE AND A SYSTEM FOR THE PREPARATION OF BEVERAGES

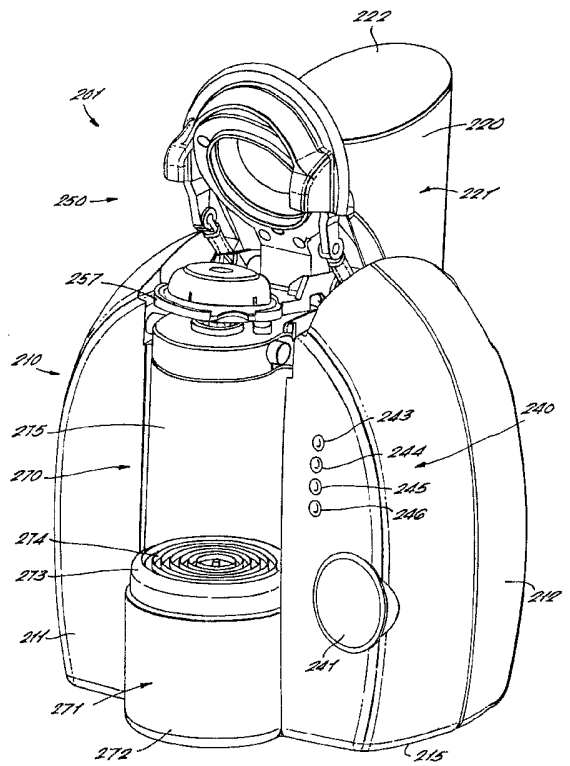

(57) Abstract: An insert (400) for use in a beverage preparation machine (201) of a type comprising a brew head (250) comprising an upwardly directed inlet (253) for supplying water to the brew head (250) and a downwardly directed outlet (250) for outflow of beverage produced by the machine (201). The insert (400) comprises, or is adapted to contain in use, a quantity of beverage ingredients in a brewing volume. A lower surface of the insert (400) comprises an inlet (405) and an outlet (404) arranged to communicate respectively with the inlet (253) and outlet (254) of the brew head (250) of the beverage preparation machine (201) when the insert (100) is inserted into the machine such that, in use, water from the inlet (253) of the brew head (250) passes upwardly through the inlet (405) of the insert (400) into the brewing volume and such that beverage produced from the water and the quantity of beverage ingredients passes downwardly through the outlet (404) of the insert (100) to flow out of the outlet (254) of the brew head (250). The lower surface of the insert (400) further comprises a RFID or barcode (320) which, in use, is readable by a RFID or barcode reader of the beverage preparation machine (201) for controlling operation of the beverage preparation machine (201), wherein the barcode (320) or RFID is located on the lower surface of the insert (400) such that a line joining the outlet (404) of the insert (400) to a centre of the barcode (320) or RFID and a line joining the outlet (404) of the insert (400) to the inlet (405) of the insert (400) separated by a minimum angular separation of greater than 70 degrees.

WO 2005/079638 A1

SE, SI, SK, TR), OAPI (BF, BJ, CF, CG, CI, CM, GA, GN, GQ, GW, ML, MR, NE, SN, TD, TG).

Declarations under Rule 4.17:

— *as to applicant's entitlement to apply for and be granted a patent (Rule 4.17(ii)) for the following designations AE, AG, AL, AM, AT, AU, AZ, BA, BB, BG, BR, BW, BY, BZ, CA, CH, CN, CO, CR, CU, CZ, DE, DK, DM, DZ, EC, EE, EG, ES, FI, GB, GD, GE, GH, GM, HR, HU, ID, IL, IN, IS, JP, KE, KG, KP, KR, KZ, LC, LK, LR, LS, LT, LU, LV, MA, MD, MG, MK, MN, MW, MX, MZ, NA, NI, NO, NZ, OM, PG, PH, PL, PT, RO, RU, SC, SD, SE, SG, SK, SL, SM, SY, TJ, TM, TN, TR, TT, TZ, UA, UG, UZ, VC, VN, YU, ZA, ZM, ZW, ARIPO patent (BW, GH, GM, KE, LS, MW, MZ, NA, SD, SL, SZ, TZ, UG, ZM, ZW), Eurasian patent (AM, AZ, BY, KG, KZ, MD, RU, TJ, TM), European patent (AT, BE, BG, CH, CY, CZ, DE, DK, EE, ES, FI, FR, GB, GR, HU, IE, IS, IT, LT, LU, MC, NL, PL, PT, RO, SE, SI, SK, TR), OAPI patent (BF, BJ, CF, CG, CI, CM, GA, GN, GQ, GW, ML, MR, NE, SN, TD, TG)*

— *of inventorship (Rule 4.17(iv)) for US only*

Published:

— *with international search report*

For two-letter codes and other abbreviations, refer to the "Guidance Notes on Codes and Abbreviations" appearing at the beginning of each regular issue of the PCT Gazette.

AN INSERT, A MACHINE AND A SYSTEM FOR THE PREPARATION OF BEVERAGES

The present invention relates to an insert, a machine and a system for the preparation of beverages.

It is known to provide machines and systems for the preparation of beverages such as coffee, tea and chocolate. Typically, in such systems the beverage ingredients are used either in a loose form or contained in a container. It is known in some machines to use flexible containers, such as filter paper bags containing roast and ground coffee or leaf tea. It is also known in other machines to use containers in the form of cartridges which may be rigid, semi-rigid, or flexible and which are pierced during preparation of the beverage. In both cases, the machine for use with such containers is specially adapted to receive a particular design of container in a brew head and to pass water and/or steam through the container to prepare a beverage which is then dispensed. Such beverage preparation machine may be used in commercial or domestic markets. In the domestic market consumers may not wish to use separate machines when preparing beverages from different beverage ingredient containing containers or, indeed, loose beverage ingredients. It is therefore an object of the present invention to provide an insert, a beverage preparation machine and a beverage preparation system which allows consumers to use a variety of containers or loose ingredients in a single beverage preparation machine. In one aspect, it is an object of the present invention to provide an insert for a beverage preparation machine which is primarily designed for use with cartridges, whether rigid, semi-rigid or flexible, that allows the beverage preparation

machine to dispense beverage ingredients from flexible containers such as filter bags.

Accordingly, the present invention provides an insert for use in a beverage preparation machine of a type comprising a brew head comprising an upwardly directed inlet for supplying water to the brew head and a downwardly directed outlet for outflow of beverage produced by the machine, the insert comprising, or being adapted to contain in use, a quantity of beverage ingredients in a brewing volume, a lower surface of the insert comprising an inlet and an outlet arranged to communicate respectively with the inlet and outlet of the brew head of the beverage preparation machine when the insert is inserted into the machine such that, in use, water from the inlet of the brew head passes upwardly through the inlet of the insert into the brewing volume and such that beverage produced from the water and the quantity of beverage ingredients passes downwardly through the outlet of the insert to flow out of the outlet of the brew head, characterised in that the lower surface of the insert further comprises a barcode or RFID which, in use, is readable by a barcode or RFID reader of the beverage preparation machine for controlling operation of the beverage preparation machine, wherein the barcode or RFID is located on the lower surface of the insert such that a line joining the outlet of the insert to a centre of the barcode and a line joining the outlet of the insert to the inlet of the insert separated by a minimum angular separation of greater than 70 degrees.

Advantageously, it has been found that this minimum angular separation of the barcode or RFID from the inlet improves the accuracy of the reading of the barcode or RFID by the recognition means of the machine. Firstly, the

separation results in any distortion of the inlet area having a minimal affect on the region of the barcode or RFID. Secondly, it has been found that there may be a small degree of leakage of fluid from the inlet area during dispensation since dispensation occurs at pressure. This fluid may spread, in particular due to capillary effect between the insert and a brew head of the machine, leading to partial obfuscation of the barcode or RFID by the fluid resulting in a greater chance of the barcode or RFID being misread. With the barcode or RFID separated by an angle of greater than 70 degrees it has been found that this problem does not occur.

Preferably, the line joining the outlet of the insert to the centre of the barcode or RFID and the line joining the outlet of the insert to the inlet of the insert subtend an angle of greater than or equal to 85 degrees.

Preferably the outlet is located at a centre or near a centre of the lower surface of the insert. The barcode or RFID is preferably located at or near a periphery of the lower surface.

The insert may be disc-shaped.

The insert may be a cartridge. The cartridge may be rigid or semi-rigid. The lower surface may be a laminate. In this case, the inlet and outlet of the cartridge may be portions of the lower surface which are opened for transportation, in use, by piercing the lower surface. Alternatively, the insert may define a receptacle for receiving loose beverage ingredients. Alternatively, the insert may define a receptacle for receiving a container of beverage ingredients, wherein the container comprises filtering means. In one aspect, the container is formed at

least in part from filter paper or filtering membrane. For example, the container may be a filter bag.

The inlet and outlet of the insert may be open. Alternatively, the inlet and outlet of the insert may be closed prior to use by means of a frangible membrane. The frangible membrane may comprise a tear-off portion.

The insert may be reusable.

The inlet of the insert, outlet of the insert and barcode or RFID may be coplanar. Alternatively, the inlet of the insert, outlet of the insert and barcode or RFID may not be coplanar.

Preferably, the insert further comprises means for preventing rotation of the insert in the brew head after insertion of the insert and closing of the brew head. The means for preventing rotation may comprise an externally directed handle or tab portion.

The externally directed handle or tab portion may be located substantially diametrically opposite the inlet of the insert.

The present invention also provides a beverage preparation system comprising a beverage preparation machine and an insert for use in said machine, said insert being as described above.

The beverage preparation machine may comprise a brew head comprising an upwardly directed inlet for supplying water to the brew head, a downwardly directed outlet for outflow of beverage produced by the machine and a barcode or RFID reader having a window in the brew head through which signals may be transmitted, wherein a line joining the outlet of the machine to a centre of the window and a line joining the outlet of the machine to the inlet of the machine subtend an angle of greater than 70 degrees.

Preferably the line joining the outlet of the machine to the centre of the window and the line joining the outlet of the machine to the inlet of the machine subtends an angle of greater than or equal to 85 degrees.

Preferably the outlet of the beverage preparation machine is located at or near a centre of the brew head.

Preferably the barcode reader or RFID reader window is located at or near a periphery of the brew head.

The brew head may comprise a mount for receiving the insert so as to prevent relative rotation of the insert and the brew head once the brew head is closed.
The mount may comprise a recess or opening for receiving an externally directed handle or tab portion of the insert. The mount may comprise an opening through which the inlet of the brew head, outlet of the brew head and barcode reader or RFID reader window are accessible.

The brew head may comprise a cavity for receiving the insert wherein one of the insert and cavity comprises a key and the other of the insert and cavity comprises a recess, wherein interengagement of the key and recess prevents relative rotation of the insert and the brew head once the brew head is closed.

The insert of the present invention may contain or be loaded with one or more beverage ingredients suitable for the formation of a beverage product. The beverage product may be, for example, one of coffee, tea, chocolate or a dairy-based beverage including milk. The beverage ingredients may be powdered, ground, leaf-based or liquid. The beverage ingredients may be insoluble or soluble. Examples include roast and ground coffee, leaf tea, powdered chocolate and soup, liquid milk-based beverages, carbonated drinks and concentrated fruit juices.

In the following description the terms "upper" and "lower" and equivalents will be used to describe the relational positioning of features of the invention. The terms "upper" and "lower" and equivalents should be understood to refer to the insert (or other components) in its normal orientation for insertion into the beverage preparation machine and subsequent dispensing. In addition, the terms "inner" and "outer" and equivalents will be used to describe the relational positioning of features of the invention. The terms "inner" and "outer" and equivalents should be understood to refer to relative positions in the insert (or other components) being, respectively, nearer or further from a centre or major axis X of the insert (or other component).

Embodiments of the present invention will now be described, by way of example only, with reference to the accompanying drawings, in which:

Figure 1a is a front perspective view of a beverage preparation machine of the present invention;

Figure 1b is a front perspective view of the machine of Figure 1a with a brew head in an open position;

Figure 2 is a rear perspective view of the machine of Figure 1a with some parts omitted for clarity;

Figure 3 is another rear perspective view of the machine of Figure 1a with some parts omitted for clarity;

Figure 4 is a perspective view of the brew head of the machine of Figure 1a with some parts omitted for clarity;

Figure 5 is another perspective view of the brew head of the machine of Figure 1a with some parts omitted for clarity;

Figure 6 is a cross-sectional view of the brew head in a closed position;

Figure 7 is a cross-sectional view of the brew head in an open position illustrated containing an insert in the form of a cartridge of the present invention;

Figure 8 is a schematic layout of the machine of Figure 1a;

Figure 9a and 9b are schematic layouts of first and second code recognition means for the machine of Figure 1a; and

Figure 10 is a plan view of a beverage cartridge of the present invention comprising a barcode;

Figure 11 is cross-sectional drawing of an outer member of a cartridge of the present invention which may be used in the beverage preparation machine of the present invention;

Figure 12 is a cross-sectional drawing of a detail of the outer member of Figure 11 showing an inwardly directed cylindrical extension;

Figure 13 is a cross-sectional drawing of a detail of the outer member of Figure 11 showing a slot;

Figure 14 is a perspective view from above of the outer member of Figure 11;

Figure 15 is a perspective view from above of the outer member of Figure 11 in an inverted orientation;

Figure 16 is a plan view from above of the outer member of Figure 11;

Figure 17 is a cross-sectional drawing of an inner member of the cartridge;

Figure 18 is a perspective view from above of the inner member of Figure 17;

Figure 19 is a perspective view from above of the inner member of Figure 17 in an inverted orientation;

Figure 20 is a plan view from above of the inner member of Figure 17;

Figure 21 is a cross-sectional drawing of the cartridge in an assembled condition;

Figure 22 is a perspective view from above of another embodiment of insert according to the present invention showing upper and lower parts thereof separated;

Figure 23 is a perspective view from below of the lower part of the insert of Figure 22;

Figure 24 is a perspective view from above of the insert of Figure 22 showing the upper and lower parts sealed together; and

Figure 25 is a cross-sectional view of the brew head of the beverage preparation machine in an open position illustrated accommodating the insert of Figure 22.

Beverage Preparation System

A beverage preparation machine 201 of the beverage preparation system of the present invention is shown in Figures 1a to 9b. The beverage preparation machine 201 generally comprises a housing 210 containing a water tank 220, a water heater 225, a water pump 230, an air compressor 235, a control processor, a user interface 240 and a brew head 250. The brew head 250 in turn generally comprises a holder 251, recognition means 252 and inlet and outlet piercers 253, 254.

The beverage preparation machine 201 is designed to be capable of dispensing beverage ingredients from inserts in the form of cartridges 1 such as that illustrated in Figures 10 to 21 and also from inserts 400 such as that shown in Figures 22 to 25 which are loaded in use with beverage ingredients in loose form or packaged in other types of

containers, such as flexible bags. To aid understanding of the comprehensive and flexible operation of the beverage preparation machine an example of an insert in the form of the cartridge 1 will first be described and its use in the beverage preparation machine 201 explained before the insert 400 and its use is described.

Cartridge for use in the system

As shown in Figure 10 to 21, the cartridge 1 generally comprises an outer member 2, an inner member 3 and a laminate 5. The outer member 2, inner member 3 and laminate 5 are assembled to form the cartridge 1 which has an interior 120 for containing one or more beverage ingredients, an inlet 121, an outlet 122 and a beverage flow path linking the inlet 121 to the outlet 122 and which passes through the interior 120. The inlet 121 and outlet 122 are initially sealed by the laminate 5 and are opened in use by piercing or cutting of the laminate 5. The beverage flow path is defined by spatial inter-relationships between the outer member 2, inner member 3 and laminate 5 as discussed below. Other components may optionally be included in the cartridge 1, such as a filter 4, as will be described further below.

The cartridge 1 is particularly designed for use in dispensing filtered products such as roast and ground coffee or leaf tea. However, the cartridge 1 may be used with other products such as chocolate, coffee, tea, sweeteners, cordials, flavourings, alcoholic beverages, flavoured milk, fruit juices, squashes, sauces and desserts.

As can be seen from Figure 15, the overall shape of the cartridge 1 is generally circular or disc-shaped with the diameter of the cartridge 1 being significantly greater than

its height. A major axis X passes through the centre of the outer member as shown in Figure 11. Typically the overall diameter of the outer member 2 is 74.5 mm ±6mm and the overall height is 16 mm ±3mm. Typically the volume of the cartridge 1 when assembled is 30.2 ml ±20%.

The outer member 2 generally comprises a bowl-shaped shell 10 having a curved annular wall 13, a closed top 11 and an open bottom 12. The diameter of the outer member 2 is smaller at the top 11 compared to the diameter at the bottom 12, resulting from a flaring of the annular wall 13 as one traverses from the closed top 11 to the open bottom 12. The annular wall 13 and closed bottom 11 together define a receptacle having an interior 34.

A hollow inwardly directed cylindrical extension 18 is provided in the closed top 11 centred on the major axis X. As more clearly shown in Figure 12, the cylindrical extension 18 comprises a stepped profile having first, second and third portions 19, 20 and 21. The first portion 19 is right circular cylindrical. The second portion 20 is frusto-conical in shape and is inwardly tapered. The third portion 21 is another right circular cylinder and is closed off by a lower face 31. The diameter of the first, second and third portion 19, 20 and 21 incrementally decreases such that the diameter of the cylindrical extension 18 decreases as one traverses from the top 11 to the closed lower face 31 of the cylindrical extension 18. A generally horizontal shoulder 32 is formed on the cylindrical extension 18 at the junction between the second and third portions 20 and 21.

An outwardly extending shoulder 33 is formed in the outer member 2 towards the bottom 12. The outwardly extending shoulder 33 forms a secondary wall 15 co-axial with the annular wall 13 so as to define an annular track

forming a manifold 16 between the secondary wall 15 and the annular wall 13. The manifold 16 passes around the circumference of the outer member 2. A series of slots 17 are provided in the annular wall 13 level with the manifold 16 to provide gas and liquid communication between the manifold 16 and the interior 34 of the outer member 2. As shown in Figure 13, the slots 17 comprise vertical slits in the annular wall 13. Between 20 and 40 slots are provided. In the embodiment shown thirty-seven slots 17 are provided generally equi-spaced around the circumference of the manifold 16. The slots 17 are preferably between 1.4 and 1.8 mm in length. Typically the length of each slot is 1.6 mm representing 10% of the overall height of the outer member 2. The width of each slot is between 0.25 and 0.35 mm. Typically, the width of each slot is 0.3 mm. The width of the slots 17 is sufficiently narrow to prevent the beverage ingredients passing therethrough into the manifold 16 either during storage or in use.

An inlet chamber 26 is formed in the outer member 2 at the periphery of the outer member 2. A cylindrical wall 27 is provided, as most clearly shown in Figure 15, which defines the inlet chamber 26 within, and partitions the inlet chamber 26 from, the interior 34 of the outer member 2. The cylindrical wall 27 has a closed upper face 28 which is formed on a plane perpendicular to the major axis X and an open lower end 29 co-planar with the bottom 12 of the outer member 2. The inlet chamber 26 communicates with the manifold 16 via two slots 30 as shown in Figure 11. Alternatively, between one and four slots may be used to communicate between the manifold 16 and the inlet chamber 26.

A lower end of the outwardly extending shoulder 33 is provided with an outwardly extending flange 35 which extends perpendicularly to the major axis X. Typically the flange 35 has a width of between 2 and 4 mm. A portion of the flange 35 is enlarged to form a handle 24 by which the outer member 2 may be held. The handle 24 is provided with an upturned rim 25 to improve grip.

The outer member 2 is formed as a single integral piece from high density polyethylene, polypropylene, polystyrene, polyester, or a laminate of two or more of these materials. A suitable polypropylene is the range of polymers available from DSM UK Limited (Redditch, United Kingdom). The outer member may be opaque, transparent or translucent. The manufacturing process may be injection moulding.

The inner member 3 as shown in Figures 17 to 20, comprises an annular frame 41 and a downwardly extending cylindrical funnel 40. A major axis X passes through the centre of the inner member 3 as shown in Figure 17.

As best shown in Figure 18, the annular frame 41 comprises an outer rim 51 and an inner hub 52 joined by ten equi-spaced radial spokes 53. The inner hub 52 is integral with and extends from the cylindrical funnel 40. Filtration apertures 55 are formed in the annular frame 41 between the radial spokes 53. A filter 4 is disposed on the annular frame 41 so as to cover the filtration apertures 55. The filter is preferably made from a material with a high wet strength, for example a non-woven fibre material of polyester. Other materials which may be used include a water-impermeable cellulosic material, such as a cellulosic material comprising woven paper fibres. The woven paper fibres may be admixed with fibres of polypropylene, polyvinyl chloride and/or polyethylene. The incorporation

of these plastic materials into the cellulosic material renders the cellulosic material heat-sealable. The filter 4 may also be treated or coated with a material which is activated by heat and/or pressure so that it can be sealed to the annular frame 41 in this way.

As shown in the cross-sectional profile of Figure 17, the inner hub 52 is located at a lower position than the outer rim 51, resulting in the annular frame 41 having a sloping lower profile.

The upper surface of each spoke 53 is provided with an upstanding web 54 which divides a void space above the annular frame 41 into a plurality of passages 57. Each passage 57 is bounded on either side by a web 54 and on a lower face by the filter 4. The passages 57 extend from the outer rim 51 downwardly towards, and open into, the cylindrical funnel 40 at openings 56 defined by the inner extremities of the webs 54.

The cylindrical funnel 40 comprises an outer tube 42 surrounding an inner discharge spout 43. The outer tube 42 forms the exterior of the cylindrical funnel 40. The discharge spout 43 is joined to the outer tube 42 at an upper end of the discharge spout 43 by means of an annular flange 47. The discharge spout 43 comprises an inlet 45 at an upper end which communicates with the openings 56 of the passages 57 and an outlet 44 at a lower end through which the prepared beverage is discharged into a cup or other receptacle. The discharge spout 43 comprises a frusto-conical portion 48 at an upper end and a cylindrical portion 58 at a lower end. The cylindrical portion 58 may have a slight taper such that it narrows towards the outlet 44. The frusto-conical portion 48 helps to channel beverage from the passages 57 down towards the outlet 44 without inducing

turbulence to the beverage. An upper surface of the frusto-conical portion 48 is provided with four support webs 49 equi-spaced around the circumference of the cylindrical funnel 40. The support webs 49 define channels 50 therebetween. The upper edges of the support webs 49 are level with one another and perpendicular to the major axis X.

The inner member 3 may be formed as a single integral piece from polypropylene or a similar material as described above and by injection moulding in the same manner as the outer member 2.

Alternatively, the inner member 3 and/or the outer member 2 may be made from a biodegradable polymer. Examples of suitable materials include degradable polyethylene (for example, SPITEK supplied by Symphony Environmental, Borehamwood, United Kingdom), biodegradable polyester amide (for example, BAK 1095 supplied by Symphony Environmental), poly lactic acids (PLA supplied by Cargil, Minnesota, USA), starch-based polymers, cellulose derivatives and polypeptides.

The laminate 5 is formed from two layers, a first layer of aluminium and a second layer of cast polypropylene. The aluminium layer is between 0.02 and 0.07 mm in thickness. The cast polypropylene layer is between 0.025 and 0.065 mm in thickness. In one embodiment the aluminium layer is 0.06 mm and the polypropylene layer is 0.025 mm thick. This laminate is particularly advantageous as it has a high resistance to curling during assembly. As a result the laminate 5 may be pre-cut to the correct size and shape and subsequently transferred to the assembly station on the production line without undergoing distortion. Consequently, the laminate 5 is particularly well suited to welding. Other

laminate materials may be used including PET/Aluminium/PP, PE/EVOH/PP, PET/metallised/PP and Aluminium/PP laminates. Roll laminate stock may be used instead of die cut stock.

The cartridge 1 may be closed by a rigid or semi-rigid lid instead of a flexible laminate.

Assembly of the cartridge 1 involves the following steps:

a) the inner member 3 is inserted into the outer member 2;

b) the filter 4 is cut to shape and placed onto the inner member 3 so to be received over the cylindrical funnel 40 and come to rest against the annular frame 41;

c) the inner member 3, outer member 2 and filter 4 are joined by ultrasonic welding;

d) the cartridge 1 is filled with one or more beverage ingredients;

e) the laminate 5 is affixed to the outer member 2.

These steps will be discussed in greater detail below.

The outer member 2 is orientated with the open bottom 12 directed upwards. The inner member 3 is then inserted into the outer member 2 with the outer rim 51 being received as a loose fit in an axial extension 14 at top 11 of the cartridge 1. The cylindrical extension 18 of the outer member 2 is at the same time received in the upper portion of the cylindrical funnel 40 of the inner member 3. The third portion 21 of the cylindrical extension 18 is seated inside the cylindrical funnel 40 with the closed lower face 31 of the cylindrical extension 18 bearing against the support webs 49 of the inner member 3. The filter 4 is then placed over the inner member 3 such that the filter material contacts the annular rim 51. An ultrasonic welding process

is then used to join the filter 4 to the inner member 3 and at the same time, and in the same process step, the inner member 3 to the outer member 2. The inner member 3 and filter 4 are welded around the outer rim 51. The inner member 3 and outer member 2 are joined by means of weld lines around the outer rim 51 and also the upper edges of the webs 54.

As shown most clearly in Figure 21, the outer member 2 and inner member 3 when joined together define a void space 130 in the interior 120 below the annular flange 41 and exterior the cylindrical funnel 40 which forms a filtration chamber. The filtration chamber 130 and passages 57 above the annular frame 41 are separated by the filter paper 4.

The filtration chamber 130 contains the one or more beverage ingredients 200. The one or more beverage ingredients are packed into the filtration chamber 130. For a filtered style beverage the ingredient is typically roast and ground coffee or leaf tea. The density of packing of the beverage ingredients in the filtration chamber 130 can be varied as desired. Typically, for a filtered coffee product the filtration chamber contains between 5.0 and 10.2 grams of roast and ground coffee in a filtration bed of thickness of typically 5 to 14 mm. Optionally, the interior 120 may contain one or more bodies, such as spheres, which are freely movable within the interior 120 to aid mixing by inducing turbulence and breaking down deposits of beverage ingredients during discharge of the beverage.

The laminate 5 is then affixed to the outer member 2 by forming a weld 126 around the periphery of the laminate 5 to join the laminate 5 to the lower surface of the outwardly extending flange 35. The weld 126 is extended to seal the laminate 5 against the lower edge of the cylindrical wall 27

of the inlet chamber 26. Further, a weld 125 is formed between the laminate 5 and the lower edge of the outer tube 42 of the cylindrical funnel 40. The laminate 5 forms the lower wall of the filtration chamber 130 and also seals the inlet chamber 26 and cylindrical funnel 40. However, a small gap 123 exists prior to dispensation between the laminate 5 and the lower edge of the discharge spout 43. A variety of welding methods may be used, such as heat and ultrasonic welding, depending on the material characteristics of the laminate 5.

Advantageously, the inner member 3 spans between the outer member 2 and the laminate 5. The inner member 3 is formed from a material of relative rigidity, such as polypropylene. As such, the inner member 3 forms a load-bearing member that acts to keep the laminate 5 and outer member 2 spaced apart when the cartridge 1 is compressed. It is preferred that the cartridge 1 is subjected to a compressive load of between 130 and 280N in use. The compressive force acts to prevent the cartridge failing under internal pressurisation and also serves to squeeze the inner member 3 and outer member 2 together. This ensures that the internal dimensions of passageways and apertures in the cartridge 1 are fixed and unable to change during pressurisation of the cartridge 1.

To use the cartridge 1 it is first inserted into the beverage preparation machine and the inlet 121 and outlet 122 are opened by piercing members of the beverage preparation machine which perforate and fold back the laminate 5. An aqueous medium, typically water, under pressure enters the cartridge 1 through the inlet 121 into the inlet chamber 26 at a pressure of between 0.1-2.0 bar. From there the water is directed to flow through the slots

30 and round the manifold 16 and into the filtration chamber 130 of the cartridge 1 through the plurality of slots 17. The water is forced radially inwardly through the filtration chamber 130 and mixes with the beverage ingredients 200 contained therein. The water is at the same time forced upwardly through the beverage ingredients. The beverage formed by passage of the water through the beverage ingredients passes through the filter 4 and filtration apertures 55 into the passages 57 lying above the annular frame 41. The sealing of the filter 4 onto the spokes 53 and the welding of the rim 51 with the outer member 2 ensures that there are no short-circuits and all the beverage has to pass through the filter 4.

The beverage then flows downwardly along the radial passages 57 formed between the webs 54 and through the openings 56 and into the cylindrical funnel 40. The beverage passes along the channels 50 between the support webs 47 and down the discharge spout 43 to the outlet 44 where the beverage is discharged into a receptacle such as a cup.

Preferably, the beverage preparation machine comprises an air purge facility, wherein compressed air is forced through the cartridge 1 at the end of the dispense cycle to flush out the remaining beverage into the receptacle.

In accordance with the present invention, the cartridge 1 is provided on the laminate with a barcode 320 as shown in Figure 10. The barcode 320 is formed from a plurality of bars of contrasting colour. Preferably the bars are black on a white background to maximise the contrast. The barcode 320 is not required to conform to a published standard but a standard format for barcodes, such as EAN-13, UPC-A, or Interleaf 2 of 5 may be used.

As shown in Figure 10, the barcode 320 is specifically located relative to the inlet 121 and the outlet 122 of the cartridge 1. As will be noted from the description of the cartridge 1 above, the inlet 121 and outlet 122 may simply comprise portions of the laminate 5 which in use will be perforated by the piercers of the machine as described below. There is no requirement for the inlet and outlet to be marked on the laminate and these are shown in Figure 10 for illustrative purposes. According to the present invention, the barcode 320 and inlet 121 of the cartridge 1 are separated by a minimum angular distance. A line 328 may be defined extending from the centre of the cartridge 1 through the centre of the barcode 320. In addition, a line 329 may be defined extending from the centre of the cartridge 1 through the centre of inlet 121. According to the present invention, the angle α subtended by these two lines is greater than 70 degrees. Preferably the angle α is greater than or equal to 85 degrees. Where the outlet 122 is at the centre of the cartridge 1 as in the illustrated embodiment the lines 328 and 329 extend from a centre of the outlet 122 to the barcode 320 and inlet 121 respectively. Advantageously, it has been found that this minimum angular separation of the barcode 320 from the inlet 121 improves the accuracy of the reading of the barcode 320 by the recognition means of the machine as described below. This is believed to be for two reasons. Firstly, the separation results in any distortion of the inlet area of the laminate on piercing of the laminate 5 having a minimal affect on the laminate in the region of the barcode 320. Secondly, it has been found that there may be a small degree of leakage of fluid from the inlet area of the cartridge 1 during dispensation since dispensation occurs at pressure. This

fluid may spread, in particular due to capillary effect between the laminate and the brew head 250, leading to partial obfuscation of the barcode 320 by the fluid resulting in a greater chance of the barcode 320 being misread. With the barcode 320 separated by an angle of greater than 70 degrees it has been found that this problem does not occur. In an alternative embodiment the barcode 320 is replaced by a RFID code, located in the same manner as described above.

Preferably, the barcode 320 is also located near a periphery of the laminate 5 so as to separate the barcode 320 from the outlet 122 so as to avoid distortion of the barcode 320 on piercing of the outlet 122.

The cartridge 1 described above is given as an example of one type of cartridge that may bear a barcode 320 in accordance with the present invention. Other cartridges of a similar type may be provided for dispensing other beverage types, for example foamed milk, espresso-style coffee, chocolate, each of which in accordance with the present invention is provided with a barcode or RFID 320 as described above.

Beverage Preparation Machine

As shown in Figure 1a the housing 210 contains and holds in position the other components of the machine 201. The housing 210 preferably made in whole or in part from a robust plastics material such as ABS. Alternatively, the housing 210 can be made in whole or in part from a metallic material such as stainless steel or aluminium. The housing 210 preferably comprises a clam-shell design having a front half 211 and a rear half 212 which allow access during assembly for fitting of the machine 201 components and can

afterwards be joined together to define an interior 213 of the housing 210. The rear half 212 provides a recess 214 for the attachment of the water tank 220. The housing 210 is formed with means, such as detents, abutments, bosses and threaded portions, for retaining the components of the machine 201 in position without the need for a separate chassis. This reduces the overall cost and weight of the machine 201. A base 215 of the housing 210 is preferably provided with feet for standing the machine thereon in a stable manner. Alternatively, the base 215 itself may have a shape forming a stable support.

The front half 211 of the housing 210 comprises a dispense station 270 where dispensation of the beverage takes place. The dispense station 270 comprises a receptacle stand 271 having a hollow interior forming a drip tray 272. An upper surface 273 of the receptacle stand is provided with a grill 274 on which the receptacle is positioned. The drip tray 272 is removable from the housing 210 to ease emptying of the collected water. A recess 275 is formed in the front half of the housing 210 above the receptacle stand 271 to accommodate the dimensions of the receptacle.

The brew head 250 is located towards the top of the housing 210 above the receptacle stand as shown in Figures 1a and 1b. Preferably, the height of the grill 274 relative to the brew head 250 can be adjusted to accommodate different sizes of receptacle. It is preferred that the receptacle is as close to the brew head 250 as possible, whilst still allowing the receptacle to be inserted and withdrawn from the dispense station 270, so as to minimise the height that the dispensed beverage has to descend before contacting the receptacle. This acts to minimise spraying

and splashing of the beverage and minimise loss of entrained air bubbles where these are present. Preferably receptacles of between 70mm and 110 mm in height can be inserted between the grill 274 and brew head 250.

The machine user interface 240 is located on the front of the housing 210 and comprises a start/stop button 241, and a plurality of status indicators 243-246.

The status indicators 243-246 preferably include a light emitting diode (LED) 243 to indicate readiness of the machine 201, a LED 244 to indicate if an error has occurred in the machine 201 operation, and one or more LEDs 245-256 to indicate whether the machine 201 is operating in manual or automatic modes. The LEDs 243-246 may be controlled to illuminate at a constant intensity, to flash intermittently, or both depending on the status of the machine 201. The LEDs 243-246 may have a variety of colours including green, red and yellow.

The start/stop button 241 controls commencement of the dispense cycle and is a manually operated push-button, switch or similar.

A volume adjustment control may be provided to allow a user of the machine 201 to manually adjust the volume of the delivered beverage without altering the other operating characteristics. Preferably the volume adjustment control allows an adjustment in volume of plus or minus 20%. The volume adjustment control may be a rotary knob, a linear slider, a digital readout with increment and decrement buttons, or similar. More typically, volume is controlled by a user operating the start/stop button 241.

A manual power switch (not shown) may be provided on the machine 201. Alternatively, power supply can be

controlled simply by insertion or removal or the power supply plug from the mains power supply.

The water tank 220 is located to the rear of the housing 210 and is connected to the rear half 212 of the housing 210. The water tank 220 comprises a generally cylindrical body 221 which may be right circular or a frustum as desired for aesthetic reasons. The tank comprises an inlet for filling the tank with water which is closed off in use by a manually removable lid 222. An outlet is provided towards a lower end of the tank which communicates with the water pump 230. The water tank 220 may be made from a transparent or translucent material to allow a consumer to view the quantity of water remaining in the tank. Alternatively, the water tank 220 may be made from an opaque material but have provided a viewing window therein. In addition, or in place of the above, the water tank 220 may be provided with a low level sensor which prevents operation of the water pump 230 and optionally triggers a warning indicator, such as an LED, when the water level in the tank descends to a preselected level. The water tank 220 preferably has an internal capacity of approximately 1.5 litres.

The water pump 230 is operatively connected between the water tank 220 and the water heater 225 as shown schematically in Figure 8 and is controlled by the control processor. The pump provides a maximum flow rate of 900 ml/min of water at a maximum pressure of 2.5 bar. Preferably, in normal use, the pressure will be limited to 2 bar. The flow rate of water through the machine 201 can be controlled by the control processor to be a percentage of the maximum flow rate of the pump by cycle chopping the electrical supply to the pump. Preferably the pump can be

driven at any of 10%, 20%, 30%, 40%, 50%, 60%, 70%, 80%, 90% or 100% of the maximum rated flow rate. The accuracy of the volume of water pumped is preferably + or - 5% leading to a + or - 5% accuracy in the final volume of the dispensed beverage. A suitable pump is the Evolution (RTM) EP8 pump produced by Ulka S.r.l. (Pavia, Italy). A volumetric flow sensor (not shown) is preferably provided in the flow line either upstream or downstream of the water pump 230. Preferably, the volumetric flow sensor is a rotary sensor.

The water heater 225 is located in the interior of the housing 210. The heater 225 has a power rating of 1550 W and is able to heat water received from the water pump 230 from a starting temperature of approximately 20 °C to an operating temperature of around 85 °C in under 1 minute. Preferably the dwell time between the end of one dispense cycle and the heater 225 being able to commence a subsequent dispense cycle is less than 10 seconds. The heater maintains the selected temperature to within + or - 2 °C during the dispense cycle. The water for the dispense cycle may be delivered to the brew head 250 at 83 °C or 93 °C. The heater 225 is able to quickly adjust the delivery temperature to either 83 °C or 93 °C from a nominal water temperature of 85 °C. The heater 225 comprises an over-temperature cut-off which shuts off the heater if the temperature exceeds 98 °C. Water output from the heater 225 is fed to the brew head 250 by means of a three-way valve. If the pressure of the water flow is acceptable the water is passed to the cartridge 1. If the pressure is below or above predetermined limits then the water is diverted by means of the three-way valve into the drip tray recovery receptacle 270.

The air compressor 235 is operatively connected to the brew head 250 by means of a one-way valve and controlled by the control processor. The air compressor 235 provides a maximum flow rate of air of 500 ml/min at 1.0 bar. In use a working volume of 35 ml is pressurised to 2.0 bar. Preferably, the air compressor 235 can produce two flow rates: a fast (or maximum) flow rate and a slow flow rate.

The control processor of the beverage preparation machine 201 comprises a processing module and a memory. The control processor is operatively connected to, and controls operation of, the water heater 225, water pump 230, air compressor 235 and user interface 240.

The memory of the control processor includes one or more variables for one or more operational parameters for the beverage preparation machine 201. The operational parameters are the temperature of the water passed through the beverage cartridge 1 during the operating stage, the speed of charging the beverage cartridge 1, the presence or otherwise of a soak step, the total dispensed volume of the beverage, the flow rate of the water during the discharge stage, and the flow rate and period of the purge stage.

The variables for the operational parameters are stored in the memory. The cartridge 1 comprises a code provided on or in the cartridge 1 representing the operational parameters required for optimal dispensation of the beverage in that cartridge 1. The code is in binary format and comprises a plurality of data bits corresponding to the variables stored in the control processor memory.

The brew head 250 is shown in Figures 4 to 7. The holder 251 of the brew head 250 comprises a fixed lower part 255, a rotatable upper part 256 and a pivotable cartridge mount 257 positioned inbetween the fixed lower part 255 and

the rotatable upper part 256. The upper part 256, lower part 255 and cartridge mount 257 are rotated about a common hinge axis 258. Figures 4 to 7 show the holder 251 with some components of the machine 201 omitted for clarity.

The rotatable upper part 256 and pivotable cartridge mount 257 are moved relative to the fixed lower part 255 by means of a clamping mechanism 280. The clamping mechanism 280 comprises a clamping lever having first and second members or parts 281 and 282. The first part 281 of the clamping lever comprises a U-shaped arm which is pivotably mounted to the upper part 256 at two first pivot points 283, one on each side of the holder 251.

The second part of the clamping lever comprises two over-centre arms 282, one on each side of the holder 251 which are each pivotably mounted to the upper part 256 at a second pivot point 285 located on the hinge axis 258 coupling the upper part 256 to the fixed lower part 255. Each over-centre arm 282 is a reciprocal member comprising a cylinder 282a, a stem 282b and a resilient sleeve 282c. The cylinder 282a has an internal bore and is rotatably mounted at one end at the hinge axis 258. A first end of the stem 282b is slidingly received in the bore of the cylinder 282a. The opposite end of the stem 282b is rotatably mounted to the U-shaped arm 281 at a third pivot point 286. The third pivot points 286 are unconnected to, and freely moveable relative to, the upper part 256 and lower part 255. The resilient sleeve 282c is mounted externally on the stem 282b and extends, in use, between abutment surfaces on the cylinder 282a and stem 282b. The resilient sleeve 282c accommodates shortening of the over-centre arm 282 but biases the over-centre arm 282 into an extended configuration. Movement of the third pivot points 286

towards and away from the hinge axis 258 is thus possible by relative movement of the stems 282b in the cylinders 282a. The resilient sleeves 282c are preferably formed from silicone. Whilst the illustrated embodiment uses two over-centre arms 282, it will be apparent that the closure mechanism my be configured with only one over-centre arm 282.

The U-shaped arm 281 extends around the front of the holder 251 and comprises two downwardly dependant hook members 287, one on each side of the holder 251, each comprising a cam surface 288 facing the hinge axis 258. The fixed lower part 255 of the holder 251 is provided with two bosses 259, or detents, located one on each side of the lower part 255 at or near a front edge 260 thereof aligned generally with the hook members 287.

As shown in Figure 4, the U-shaped arm 281 may be formed from a one piece plastics moulding comprising an ergonomic hand grip and the hook members 287 integral to the arm.

The cartridge mount 257 is rotatably mounted between the upper and lower parts 255, 256 of the holder 251. The mount 257 is provided with a substantially circular recess 290 which receives in use the beverage cartridge 1. The recess 290 includes an irregularity 291 for accommodating the handle portion 24 of the beverage cartridge 1 which also acts to prevent rotation of the beverage cartridge 1 in the holder 251. The cartridge mount 257 is sprung relative to the fixed lower part 255 such that in the open position, as shown in Figure 7, the cartridge mount 257 is biased out of contact with the fixed lower part 255 so that the cartridge mount 257 is moved out of contact with the outlet and inlet piercer members 254, 253. The cartridge mount 257 is

provided with an aperture 292 for receiving therethrough the inlet and outlet piercers 253, 254 and a head 300 of the cartridge recognition means 252 when the cartridge mount 257 is moved into the closed position.

The upper part 255 comprises a generally circular body 310 housing a circular viewing window 312 through which a consumer can view the beverage cartridge 1 during a dispense cycle and also visually confirm whether a cartridge 1 is loaded in the machine 201. The viewing window 312 is cup-shaped having a downwardly directed rim 311. The viewing window 312 is able to move axially relative to the body 310 of the upper part 255. One arrangement of accomplishing the relative movement is to provide a wave spring (not shown), or similar resilient means such as a rubberised ring, positioned between the viewing window 312 and the circular body 310. In an alternative arrangement, a series of helical compression springs (not shown) are provided extending between the viewing window 312 and the body 310. In both cases the resilient means allows the viewing window 312 to move axially relative to the circular body 310 by a small degree.

When the holder 251 is in the closed position, the viewing window 312 bears against the beverage cartridge 1 biasing it against the lower part 256. In one arrangement, the rim 311 of the viewing window contacts and bears against the flange 35 of the beverage cartridge. At the same time the window 312 contacts the closed top 11 of the cartridge 1. In an alternative arrangement, only the viewing window 312 contacts the closed top 11 of the cartridge 1, and there is no bearing contact between the rim 311 and the flange 35. The pressure exerted by the rim 311 on the flange 35 and/or

by the window 312 on the closed top 11 ensures a fluid tight seal between the cartridge 1 and the holder 251.

The lower part 255 comprises the inlet and outlet piercers 253, 254 and the head 300 of the cartridge recognition means 252. The inlet piercer 253 comprises a hollow needle-like tube 260 having a sharpened end 261 for perforating the laminate 5 of the beverage cartridge 1 in use. The inlet piercer 253 is in fluid communication with a water conduit 262 as shown in Figure 7 which passes through the lower part 255 and is connected to an outlet conduit 263 of the water heater 225. The outlet piercer 254 is similar in type to the outlet piercer described in the applicant's European patents EP 0 389 141 and EP 0 334 572 and comprises an open ended cylinder 264 of circular or D-shaped cross-section having dimensions larger than the discharge spout 43. An arcuate portion 265 of the upper end of the outlet piercer 254 is serrated to pierce and eventually cut the laminate of the beverage cartridge 1. The remainder of the upper end is cut back longitudinally of the cylinder at least to the base of the teeth 266 of the serrated portion to fold or pull the cut laminate 5 away from the outlet aperture before the beverage is dispensed therethrough. The outlet piercer 254 pierces the laminate 5 externally of the discharge spout 43 and when the cartridge mount 257 is in the closed position, rests in the annulus between the discharge spout 43 and the outer wall 42 of the discharge funnel 40. The outlet piercer 254 folds back the cut laminate 105 into the annulus. Thereby both the outlet piercer 254 and the cut laminate 105 are held out of the way of the discharged beverage.

The outlet piercer 254 is surrounded by a ledge 254a which is raised relative to its surroundings by 0.5mm.

Advantageously, the outlet piercer 254 is removable from the lower part 255 to enable it to be thoroughly cleaned, for example, in a dishwasher. The removable outlet piercer 254 is received in a recess 267 in the lower part 255 where it is seated. The inlet piercer 253 and/or the outlet piercer 254 may be made of a metal, such as stainless steel, or from a plastics material. Advantageously, the use of plastic cutting elements is enabled by use of a laminate 5 which is able to be punctured and cut by a non-metallic material. Consequently, the piercers 253, 254 can be made less sharp which lowers the risk of injury to the consumer. In addition, plastic piercing elements are not prone to rust. Preferably, the inlet piercer 253 and the outlet piercer 24 are formed as a single, integral unit which is removable from the lower part 255.

In accordance with the present invention, the inlet piercer 253 is located at a specific angular distance from a window of the cartridge recognition means head 300. A line 326 may be defined extending from the centre of the brew head 250 through the centre of the window of the recognition means 252. In addition, a line 327 may be defined extending from the centre of the brew head 250 through the centre of inlet piercer 253. According to the present invention, the angle α subtended by these two lines is greater than 70 degrees. Preferably the angle α is greater than or equal to 85 degrees. Where the outlet piercer 254 is at the centre of the brew head 250 as in the illustrated embodiment the lines 326 and 327 extend from a centre of the outlet piercer 254 to the window and inlet piercer respectively.

In use, the upper part 256 of the holder 251 is movable from an open position in which it is orientated vertically or towards the vertical as shown in Figure 1b, to a closed

position in which it is orientated substantially horizontally and in interengagement with the fixed lower part 255 and cartridge mount 257. The upper part 256 is moved from the open to the closed positions by operation of the clamping lever. To close the upper part 256 a user takes hold of the clamping lever by the U-shaped arm 281 and pulls downwards. Consequently, the upper part 256 rotates which first brings the rim 311 of the viewing window 312 into contact with the flange 35 of the beverage cartridge 1 in the cartridge mount 257 and/or the window 312 itself into contact with the closed top 11 of the cartridge 1. Continued rotation of the upper part 256 rotates the upper part 256 and cartridge mount 257 down into contact with the lower part 255. Further rotation of the U-shaped arm 281 causes the U-shaped arm 281 to rotate relative to the upper part 256 and the lower part 255 resulting in the hook members 287 of the upper part 256 engaging the bosses 259 of the lower part 255 with the cam surface 288 riding over the bosses 259. During this last stage of rotation the cartridge 1 is compressed between the cartridge mount 257 and the viewing window 312. As a result, the viewing window 312 is moved axially relative to the circular body 310 of the upper part 256 against the bias of the wave spring or helical springs. This movement allows for a take up of tolerances in the beverage cartridge 1 and beverage preparation machine and ensures that the amount of compressive force applied to the cartridge is kept within an acceptable range. The clamping force of the mechanism as moderated by the action of the wave spring or helical springs ensures a clamping pressure on the cartridge. For the arrangement where bearing pressure is applied to both the flange 35 and the closed top 11 of the cartridge 1, it has been found that a pressure of

between 130 and 280N is required. Preferably the force is approximately 200N. A force less than about 130N does not provide an adequate seal, whilst a force greater than about 280N leads to plastic failure of the components of the cartridge 1. For the arrangement where bearing pressure is applied only to the closed top 11 of the cartridge 1 it has been found that a pressure of between 50N and 280N is required. It will be noted that a lower pressure level is possible with this arrangement without a deleterious effect on the sealing of the cartridge 1. During closure of the brew head the laminate 5 of the cartridge 1 is tensioned as it is brought into contact with the ledge 254a surrounding the outlet piercer 254 which causes the laminate 5 to flex out of plane as the distal end of the outer tube 42 of the cylindrical funnel is moved upwardly by 0.5mm relative to the flange 35. This movement also ensures that the great majority of the compressive force applied to the cartridge acts through the central region of the cartridge 1 through the load-bearing inner member 3. In the closed position the cartridge 1 may thus be clamped around the flange 35 by means of the rim 311 of the viewing window 312 and is always firmly clamped between the closed top 11 of the cartridge and the outer tube 42 of the inner member 3 by contact with the viewing window 312 and the ledge 254a. These clamping forces help prevent failure of the cartridge 1 during pressurisation and also ensure that the inner member 3 and outer member 2 are fully seated relative to one another and thus that all internal passageways and apertures remain at their intended dimensions even during internal pressurisation.

An imaginary datum line can be drawn between the first and second pivot points 283, 285 of the holder 251. As can

be seen in Figure 7, in the open position the third pivot points 286 are located on the side of the datum line nearest the fixed lower part 255. As the upper part 256 reaches the closed position, the third pivot points 286 of the clamping lever pass through the datum line joining the first and second pivot points 283, 285 to the opposite side of the line, furthest from the fixed lower part 255. Consequently, the U-shaped arm 281 'snaps through' from a first stable position to a second stable position. The snap through action is accommodated by shortening of the over-centre arms 282 and consequential compression of the resilient sleeves 282c. Once the third pivot points 286 are past the imaginary datum line then recovery of the resilient sleeves 282c acts to continue the motion of the third pivot points 286 away from the imaginary datum line. The clamping lever thus has a bi-stable operation in that the lever is stable in the open or closed positions but unstable at the point when the third pivot points 286 lie on the imaginary datum line joining the first and second pivot points 283, 285. Thus, the snap-through action of the clamping lever provides a positive closure mechanism which leads to a definite closure action wherein in the final stages of the clamping lever's rotation, the snap-through action of the U-shaped arm 281 and second arms 284 forces the hook members 287 firmly into engagement with the bosses 259. In addition, the resilient sleeves 282c provide a resistance to re-opening of the upper part 256 since a minimum force is required to compress the sleeves 282c sufficiently to move the third pivot points 286 back into line with the datum line joining the first and second pivot points 283, 285. Advantageously, the interengagement of the hook members 287 and the bosses 259 prevents separation of the upper and

lower parts other than by rotation of the clamping lever. This is useful in preventing opening of the brew head 250 during operation when the brew head 250 is subject to internal pressurisation.

The purpose of the recognition means 252 is to allow the machine 201 to recognise the type of beverage cartridge 1 that has been inserted and to adjust one or more operational parameters accordingly. In a typical embodiment, the recognition means 252 comprises an optical barcode reader which reads the printed barcode 320 provided on the laminate 5 of the beverage cartridge 1 as shown in Figure 10 and discussed above. The optical barcode reader comprises one or more LEDs 321 to illuminate the barcode 320, a focusing lens 322 to acquire an image of the barcode, a charge coupled device (CCD) 323 for producing an electrical signal representative of the acquired image and support circuitry for the LEDs and CCD. The space in the lower part for accommodating the barcode reader is limited. A mirror or mirrors 324 may be used to reflect the light from the LEDs 321 to a focussing lens which is not located in the lower part 255. Schematic arrangements are shown in Figures 9a and 9b. The lower part 255 comprises an aperture 326 which is the same size as the barcode 320 on the beverage cartridge 1. The aperture 326 is closed by a window, preferably glass, which can transmit the signals produced by the barcode reader. In use the electrical signals produced are decoded by signal processing software and the results forwarded to the control processor. The software can recognise whether the read of the barcode contained errors, although the occurrence of these is minimised as described above by specific location of the barcode 320 relative to the inlet. The barcode 320 may be rescanned a number of

times before an error message is presented to the consumer. If the machine 201 is unable to read the barcode the consumer is able to use the beverage cartridge 1 to dispense a beverage using a manual mode of operation. Alternatively, an RFID reader is provided to read an RFID located on the cartridge 1.

The brew head 250 may also include a cartridge sensor for detecting whether a cartridge is present in the holder 251.

The brew head 250 may also include a lock sensor which detects whether the holder 251 is properly closed. Preferably the lock sensor comprises a micro-switch which is triggered when the holder 251 is closed and locked. Preferably the cartridge sensor and lock sensor are connected in series such that the output of both sensors must be satisfactory, i.e. cartridge present and mechanism locked, before the dispense cycle can be commenced.

Operation of the machine 201 comprises insertion of a beverage cartridge 1 into the brew head 250, carrying out a dispense cycle in which the beverage is dispensed and removal of the cartridge 1 from the machine.

The operational behaviour of the machine 201 is determined by software embedded in the control processor.

To insert the cartridge 1 the holder 251 is opened as described above to expose the cartridge mount 257. The cartridge 1 is then placed on the cartridge mount 257 received within the recess 290 such that the handle 24 of the cartridge is located in the irregularity 291. The optical or magnetic barcode 320 or RFID of the cartridge 1 is orientated directly above the aperture 326 in the cartridge mount 257. The holder 251 is then closed by operation of the clamping lever as described above. During

closure the inlet and outlet piercers 253, 254 pierce the laminate 5 of the cartridge 1 to form the cartridge inlet 121 and outlet 122. As described above the laminate 5 cut by the outlet piercer 254 is folded up into the annulus surrounding the discharge spout 43. When closed the holder 251 grips the cartridge 1 around the rim 35 between the cartridge mount 257 and the upper part 256 and/or between the window 311 and the top 11 of the cartridge 1 to form a fluid tight seal of sufficient integrity to withstand the pressures developed during the dispense cycle.

To commence the operating cycle the consumer operates the start/stop button 241.

The operating cycle comprises the steps of cartridge recognition and the discharge cycle.

Cartridge recognition is performed by the optical recognition means 252 as described above assuming that the outputs from the cartridge sensor and lock sensor are satisfactory. Once the barcode 320 or RFID has been decoded the operational parameters of the machine 201 are adjusted by the control processor. The discharge cycle is then automatically commenced.

The discharge cycle has four main stages, not all of which are used for all beverage types:

(i) Pre-wet
(ii) Pause
(iii) Brew/Mixing
(iv) Purge

In the pre-wet stage the cartridge 1 is charged with water from the water storage tank 220 by means of the water pump 230. The charging with water causes the beverage ingredients 200 in the filtration chamber 130 to be wetted. The charging may take place at a "fast" flow rate of 600

ml/min or a "slow" flow rate of 325 ml/min. The slow charging rate is particularly useful for cartridges containing viscous liquid beverage ingredients where the ingredients require some dilution before they are able to be pumped at a higher volume flow rate. The volume of water injected into the cartridge 1 is selected to ensure that water or beverage does not drip out of the cartridge outlet 122 during this stage.

The pause stage allows the beverage ingredients 200 to soak in the water injected during the pre-wet stage for a predetermined period of time. Both the pre-wetting and soaking stages are known to increase the yield of the extractibles from the beverage ingredients 200 and to improve the end flavour of the beverage. Pre-wetting and soaking are particularly used where the beverage ingredients are roast and ground coffee.

In the brew/mixing stage water is passed through the cartridge 1 in order to produce the beverage from the beverage ingredients 200. The temperature of the water is determined by the control processor which sends instructions to the water heater 225 to heat the water passing from the water tank 220 to the brew head 250. Water enters the lower part 255 of the holder 251 through the conduit 262 via the inlet valve and the inlet piercer 253 into the inlet chamber 126 of the beverage cartridge 1. Brewing and/or mixing and subsequent dispensing of the beverage from the beverage cartridge 1 is as described above with reference to the versions of the beverage cartridge 1.

The air purge comprises the blowing of pressurised air through the beverage preparation machine and the beverage cartridge 1 to ensure that all beverage is dispensed and that the flow path is cleared ready for dispensing another

beverage. The air purge does not commence immediately on cessation of the brew/mixing stage to allow for the majority of the fluid to clear the flow path. This prevents an unacceptable spike in internal pressure on commencement of the air purge.

In normal operation a user manually stops the machine 201 by operating the start/stop button 241.

Once the operating cycle has been completed the consumer removes the cartridge 1 by opening the holder 251 and manually removing and disposing of the cartridge. Alternatively, the machine 201 may be provided with an automatic ejection mechanism for removing the cartridge automatically on opening the holder 251.

Insert for use in the system

As described above, the machine 201 of the present invention may also be used with other inserts not necessarily of a cartridge form. An example of another suitable form of insert will now be described.

The insert 400 comprises an upper part 401 and a lower part 402. The upper part 401 in the illustrated embodiment is generally in the form of the outer member 2 described above with reference to the cartridge 1. However, it will be apparent that other shapes and forms of upper part may be used. The upper part 401 does not contain an inner member but is substantially hollow having a downwardly directed opening 409. Sealing means in the form of a rubberised or elastomeric 'O' ring 403 is inserted or attached to a rim of the opening 409 of the upper part 401. The O-ring 403 may be releasable or permanently attached to the upper part 401. Alternatively, the O-ring 402 may be attached to the lower part 402.

The lower part 402 is generally in the form of the mount 257 described above. In particular, the lower part 402 comprises a generally planer portion having a circular recess 408 for receiving the upper part 401 as will be described below. In addition, the lower part 402 comprises two dependent legs 407 having C-shaped clipping means 406 at their distil ends for attachment to the pivot axis of the beverage preparation machine 201 in the same manner as described above for attachment of the mount 257 of the beverage preparation machine 201. The lower part 402 is provided with an inlet aperture 405 near a periphery of the recess 408 and an outlet aperture 404 at a centre of the recess 408. Figure 23 illustrates the underneath view of the lower part 402 of the insert 400. As shown, the inlet aperture 405 may be surrounded by a dished recess. Alternatively, the inlet aperture 405 may be a simple hole in a flat planar surface. The lower surface 417 of the lower part 402 is also provided with a recess 415 for receiving a barcode or RFID for reading by the barcode reader or RFID reader of the beverage preparation machine 201 in the same manner as the reading of the barcode or RFID of the cartridge 1 as described above. Alternatively, the barcode or RFID may be applied directly to the lower surface 417 of the lower part 402 without the need for a recess 415. In particular, in accordance with the present invention, and as with the cartridge 1 described above, the barcode 320 or RFID and inlet aperture 405 of the insert 400 are separated by a minimum angular distance. A line 328 may be defined extending from the centre of the insert 400 through the centre of the barcode 320 or RFID. In addition, a line 329 may be defined extending from the centre of the insert 400 through the centre of inlet aperture 405. According to the

present invention, the angle α subtended by these two lines is greater than 70 degrees. Preferably the angle α is greater than or equal to 85 degrees.

The outlet aperture 404 of the lower part 402 is provided with a downwardly dependent cylindrical extension 410 which, as shown in Figure 25 is accommodated on closure of the brew head by removing the removable inlet and outlet piercers 253, 254.

In use, the upper part 401 and lower part 402 of the insert 400 are sealed together as shown in Figure 24 to define a brewing volume in between having an inlet provided by the inlet aperture 405 of the lower part 402 and an outlet provided by the outlet aperture 404 of the lower part 402. It will be appreciated that the inlet to the brewing volume is upwardly directed and the outlet from the brewing volume is downwardly directed.

When the upper part 401 and lower part 402 are sealed together, the 'O' ring 403 provides a peripheral seal surrounding the brewing volume to prevent leakage of fluid at the extremities of the insert 400.

As shown in Figure 25, the insert 400 may be inserted into the beverage preparation machine of the type described above in place of the rotatable mount 257 and the removable inlet and outlet piercers 253, 254. As with the mount 257, the insert 400 is rotatable about the pivot access of the beverage preparation machine.

In use, a quantity of beverage ingredients is loaded into the brewing volume defined by the insert 400 by placing the beverage ingredients between the upper part 401 and lower part 402 and then placing the upper part 401 and lower part 402 together so as to seal the brewing volume by means of the 'O' ring 403. This loading operation may take place

before or after the insert 400 is removably attached to the beverage preparation machine. Preferably, the lower part 402 of the insert 400 remains attached to the beverage preparation machine 201 and the user loads the quantity of beverage ingredients onto the lower part 402 and then places the upper part 401 on top of the lower part 402 in the recess 408 to define and seal the brewing volume.

Operation of the closure mechanism of the beverage preparation machine is exactly the same as described above. In particular, it should be noted that on closure of the closure mechanism the brew head applies a downward pressure on the upper part 401 of the insert 400 to hold the upper part 401 and lower part 402 together to create the seal therebetween. The pressure may be applied to the upper part 401 by the top portion of the viewing window 311 or by the downwardly dependent rim of the viewing window dependent on the construction of the upper part 401. In addition, the downwardly directed pressure applied by the closure mechanism of the beverage preparation machine seals the lower part 402 of the insert 400 against the fixed lower part 255 of the brew head ensuring a seal between the inlet aperture 405 of the lower part 402 and the upwardly directed inlet of the brew head to ensure that water does not leak during dispensation at this point. Preferably the lower part 255 of the brew head 250 at the inlet is provided with a rubberised seal 420 which stands slightly proud of the plane of the lower part 255 to create an improved seal between the upwardly directed inlet and the lower surface 417 of the lower part 402 of the insert 400.

The quantity of beverage ingredients loaded into the brewing volume of the insert 400 may be loose or may be contained in a container such as a flexible filter bag made

of filter paper. Use of a filter bag has the advantage that loading of the beverage ingredients is very quick and removal of the beverage ingredients after dispensation is made easier.

During dispensation the beverage preparation machine injects water upwardly into the brewing volume from the upwardly directed inlet of the brew head 250. The water mixes with the quantity of beverage ingredients held in the brewing volume and the resulting beverage is dispensed downwardly through the outlet aperture 404 into a receptacle situated below the brew head 250. Other aspects of the operation of the beverage preparation machine are as described above in respect of operation of the cartridge. In particular, the recognition means of the beverage preparation machine may be used to read a barcode or RFID situated on the lower surface of the lower part 402, preferably in the recess 415.

The insert 400 has been described particularly for use with beverage ingredients contained in containers such as filter bags. As indicated, the beverage ingredients may alternatively be in a loose form. In this case, a separate filter may be provided in the insert 400 to prevent discharge of beverage ingredient residue. A preferred arrangement is for a planer filter to be placed across the upper extremity of the outlet aperture 404 of the lower part 402.

It will be appreciated that it will be advantageous that the upper part 401 of the insert 400 is rigid or semi-rigid in order to be able to transfer the downward pressure created by the closure mechanism to the seal 403 to ensure a good seal between the upper part 401 and lower part 402 of the insert 400.

In the illustrated embodiment of the insert 400, the upper part 401 and lower part 402 are shown as separate items. In an alternative configuration, the upper part 401 and lower part 402 may be hinged together at one point but movable from an open position and a closed position to allow loading and unloading of the quantity of beverage ingredients. Preferably, this version of the insert 400 would be formed as a plastic moulding with a plastic hinge.

Flow through the insert 400 is generally in an inward direction from the inlet 405 to the outlet 404. Also, advantageously since the inlet 405 and outlet 404 are both provided in the lower part 402, the construction of the upper part 401 is simplified.

In the above description the insert has been described as defining a brew volume. It should be understood that the insert and beverage preparation machine may be used with beverage ingredients which do not require brewing but are, instead, dissolved, diluted or otherwise mixed with water without departing from the scope of the present invention.

An insert of a non-cartridge form has been described for use with the beverage preparation system comprising an upper and a lower part and defining a brewing volume inbetween. Open-topped inserts may also be used which are formed for sealing against the brew head 250 of the machine 210 and which are provided with a barcode or RFID on their lower surface located in accordance with the present invention.

Claims:

1. An insert for use in a beverage preparation machine of a type comprising a brew head comprising an upwardly directed inlet for supplying water to the brew head and a downwardly directed outlet for outflow of beverage produced by the machine, the insert comprising, or being adapted to contain in use, a quantity of beverage ingredients in a brewing volume, a lower surface of the insert comprising an inlet and an outlet arranged to communicate respectively with the inlet and outlet of the brew head of the beverage preparation machine when the insert is inserted into the machine such that, in use, water from the inlet of the brew head passes upwardly through the inlet of the insert into the brewing volume and such that beverage produced from the water and the quantity of beverage ingredients passes downwardly through the outlet of the insert to flow out of the outlet of the brew head, characterised in that the lower surface of the insert further comprises a RFID or barcode which, in use, is readable by a RFID or barcode reader of the beverage preparation machine for controlling operation of the beverage preparation machine, wherein the barcode or RFID is located on the lower surface of the insert such that a line joining the outlet of the insert to a centre of the barcode or RFID and a line joining the outlet of the insert to the inlet of the insert separated by a minimum angular separation of greater than 70 degrees.

2. An insert as claimed in claim 1 wherein the line joining the outlet of the insert to the centre of the barcode or RFID and the line joining the outlet of the

insert to the inlet of the insert subtend an angle of greater than or equal to 85 degrees.

3. An insert as claimed in any preceding claims wherein the outlet is located at a centre or near a centre of the lower surface of the insert.

4. An insert as claimed in any preceding claim wherein the barcode or RFID is located at or near a periphery of the lower surface.

5. An insert as claimed in any preceding claim wherein the insert is disc-shaped.

6. An insert as claimed in any preceding claim wherein the insert is a cartridge.

7. An insert as claimed in claim 6 wherein the cartridge is rigid or semi-rigid.

8. An insert as claimed in claim 6 or claim 7 wherein the lower surface is a laminate.

9. An insert as claimed in any of claims 6 to 8 wherein the inlet and outlet of the cartridge are portion of the lower surface which are opened for transportation, in use, by piercing the lower surface.

10. An insert as claimed in any of claims 1 to 5 wherein the insert defines a receptacle for receiving loose beverage ingredients.

11. An insert as claimed in any of claims 1 to 5 wherein the insert defines a receptacle for receiving a container of beverage ingredients, wherein the container comprises filtering means.

12. An insert as claimed in claim 11 wherein the container is formed at least in part from filter paper or filtering membrane.

13. An insert as claimed in claim 12 wherein the container is a filter bag.

14. An insert as claimed in any of claims 10 to 13 wherein the inlet and outlet of the insert are open.

15. An insert as claimed in any of claims 10 to 13 wherein the inlet and outlet of the insert are closed prior to use by means of a frangible membrane.

16. An insert as claimed in claim 15 wherein the frangible membrane comprises a tear-off portion.

17. An insert as claimed in any of claims 10 to 16 which is reusable.

18. An insert as claimed in any preceding claim wherein the inlet of the insert, outlet of the insert and barcode or RFID are coplanar.

19. An insert as claimed in any preceding claim wherein the inlet of the insert, outlet of the insert and barcode or RFID are not coplanar.

20. An insert as claimed in any preceding claim wherein the insert further comprises means for preventing rotation of the insert in the brew head after insertion of the insert and closing of the brew head.

21. An insert as claimed in claim 20 wherein the means for preventing rotation comprises an externally directed handle or tab portion.

22. An insert as claimed in claim 21 wherein the externally directed handle or tab portion is located substantially diametrically opposite the inlet of the insert.

23. A beverage preparation system comprising a beverage preparation machine and an insert for use in said machine, said insert being as claimed in any preceding claim.

24. A beverage preparation system as claimed in claim 23 wherein the beverage preparation machine comprises a brew head comprising an upwardly directed inlet for supplying water to the brew head, a downwardly directed outlet for outflow of beverage produced by the machine and a barcode or RFID reader having a window in the brew head through which signals may be transmitted, wherein a line joining the outlet of the machine to a centre of the window and a line joining the outlet of the machine to the inlet of the machine subtend an angle of greater than 70 degrees.

25. A beverage preparation system as claimed in claim 24 wherein the line joining the outlet of the machine to the centre of the window and the line joining the outlet of the

machine to the inlet of the machine subtends an angle of greater than or equal to 85 degrees.

26. A beverage preparation system as claimed in claim 24 or claim 25 wherein the outlet of the beverage preparation machine is located at or near a centre of the brew head.

27. A beverage preparation system as claimed in any of claims 24 to 26 wherein the barcode reader or RFID reader window is located at or near a periphery of the brew head.

28. A beverage preparation system as claimed in any of claims 24 to 27 wherein the brew head comprises a mount for receiving the insert so as to prevent relative rotation of the insert and the brew head once the brew head is closed.

29. A beverage preparation system as claimed in claim 28 wherein the mount comprises a recess or opening for receiving an externally directed handle or tab portion of the insert.

30. A beverage preparation system as claimed in claim 28 or claim 29 wherein the mount comprises an opening through which the inlet of the brew head, outlet of the brew head and barcode reader or RFID reader window are accessible.

31. A beverage preparation system as claimed in any of claims 24 to 27 wherein the brew head comprises a cavity for receiving the insert wherein one of the insert and cavity comprises a key and the other of the insert and cavity comprises a recess, wherein interengagement of the key and

recess prevents relative rotation of the insert and the brew head once the brew head is closed.

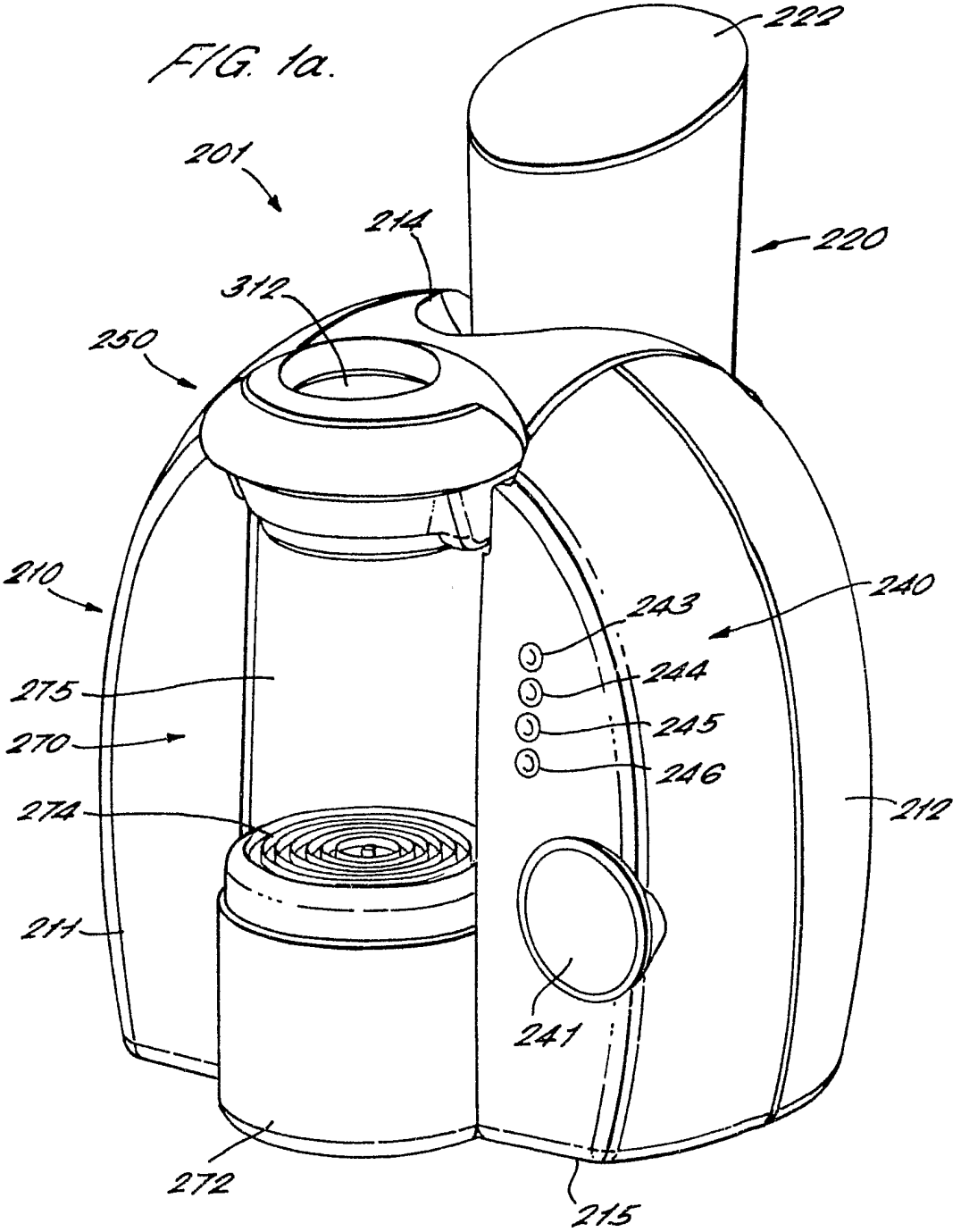
FIG. 1a.
222
201
214
220
312
250
210
243
240
244
275
245
270
246
274
212
211
241
272
215

FIG. 1b.

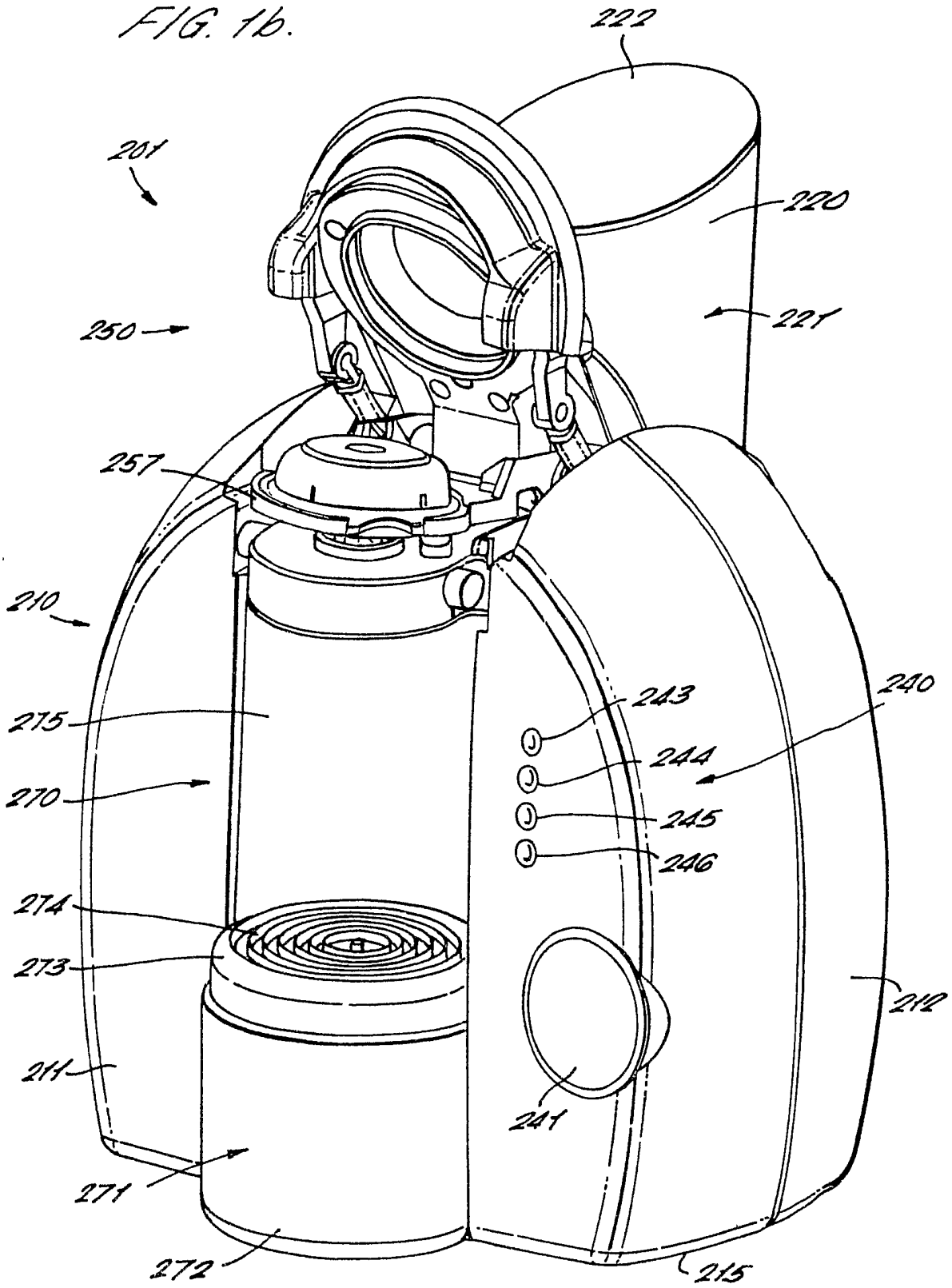
222
201
220
221
250
257
210
243
240
215
244
270
245
246
274
273
212
211
241
271
272
215

FIG. 2.

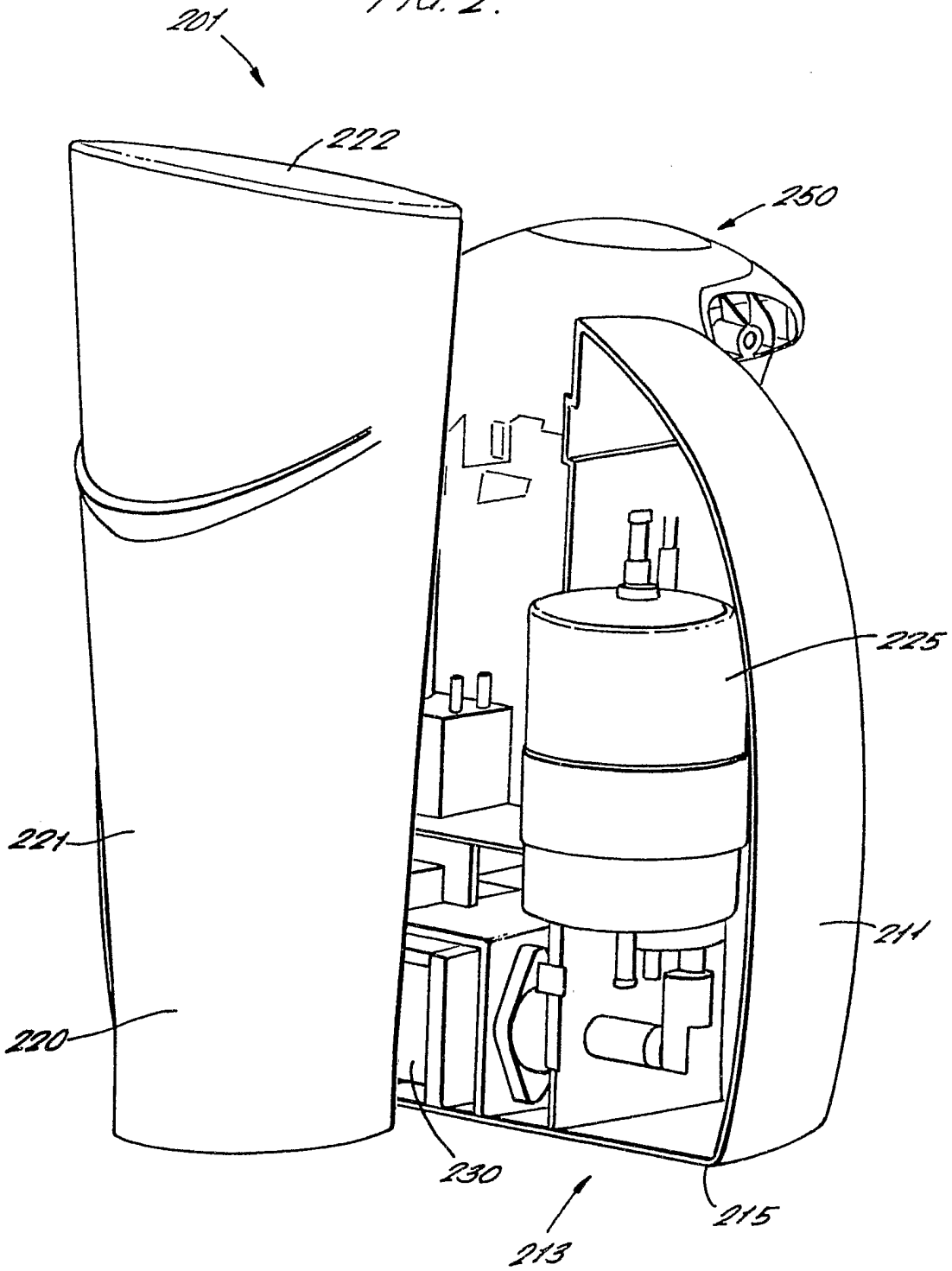

FIG. 3.

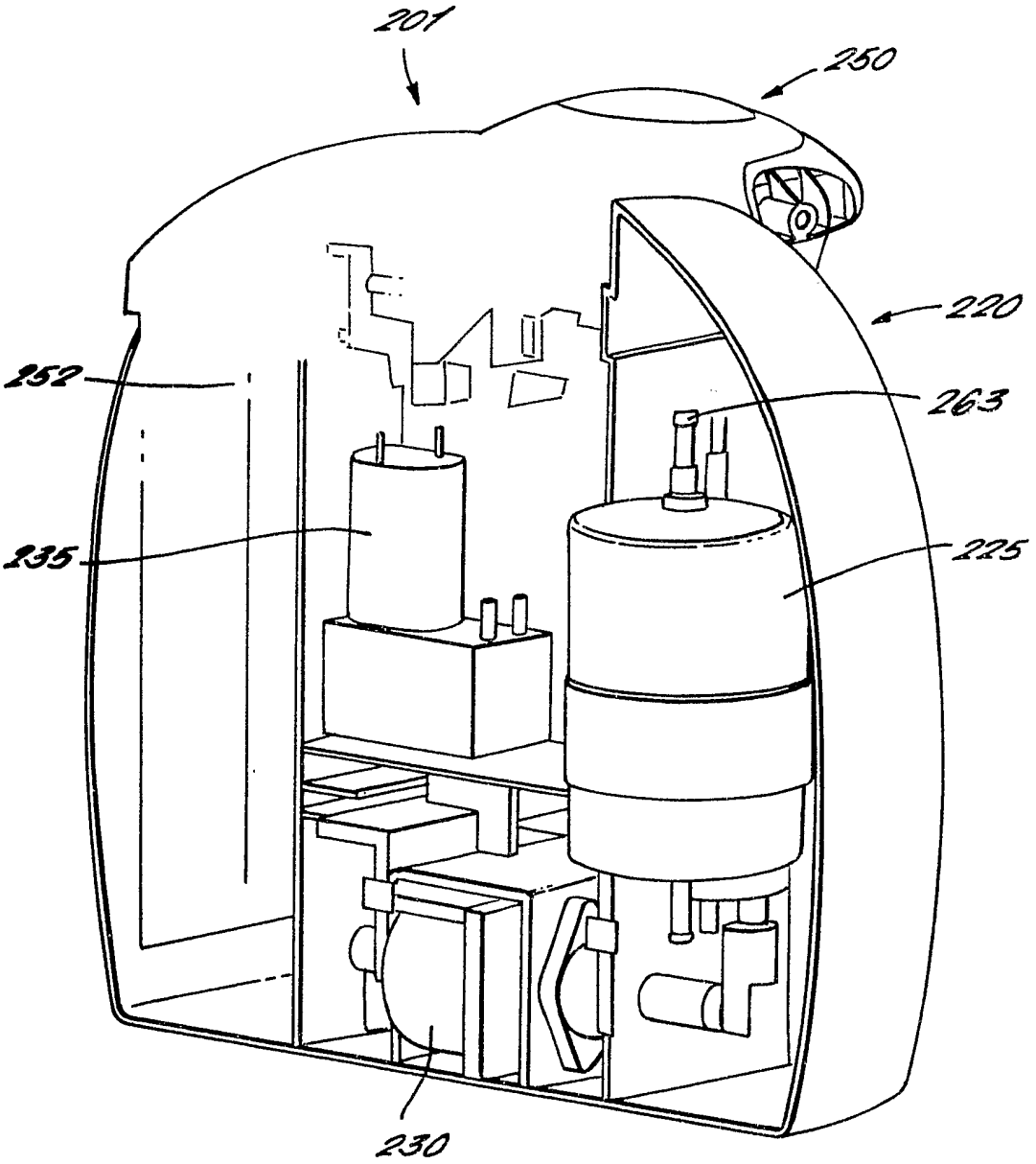

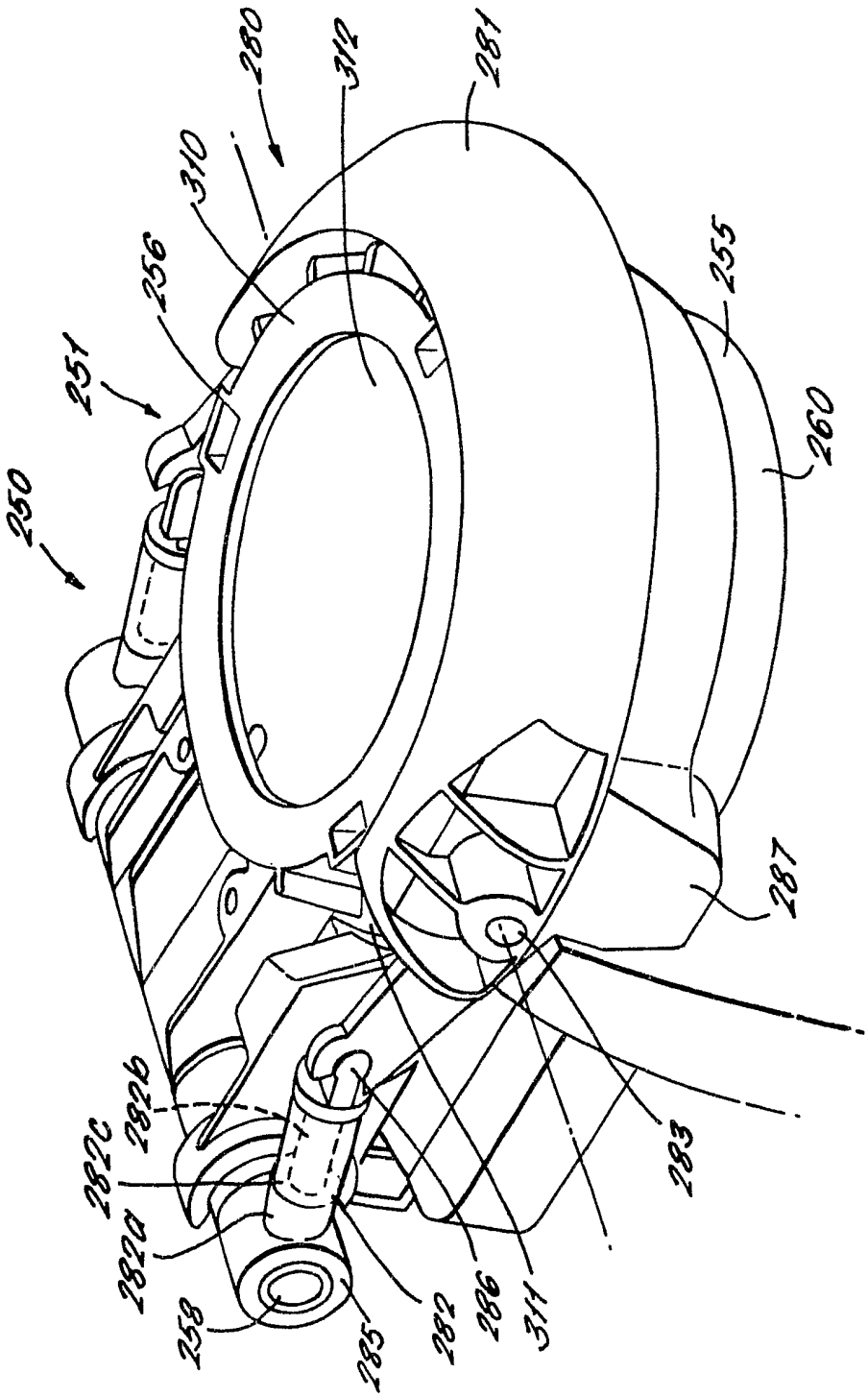
250
251
256
310
280
312
281
255
260
287
283
311
286
282
285
258
282a
282c
282b

FIG. 4.

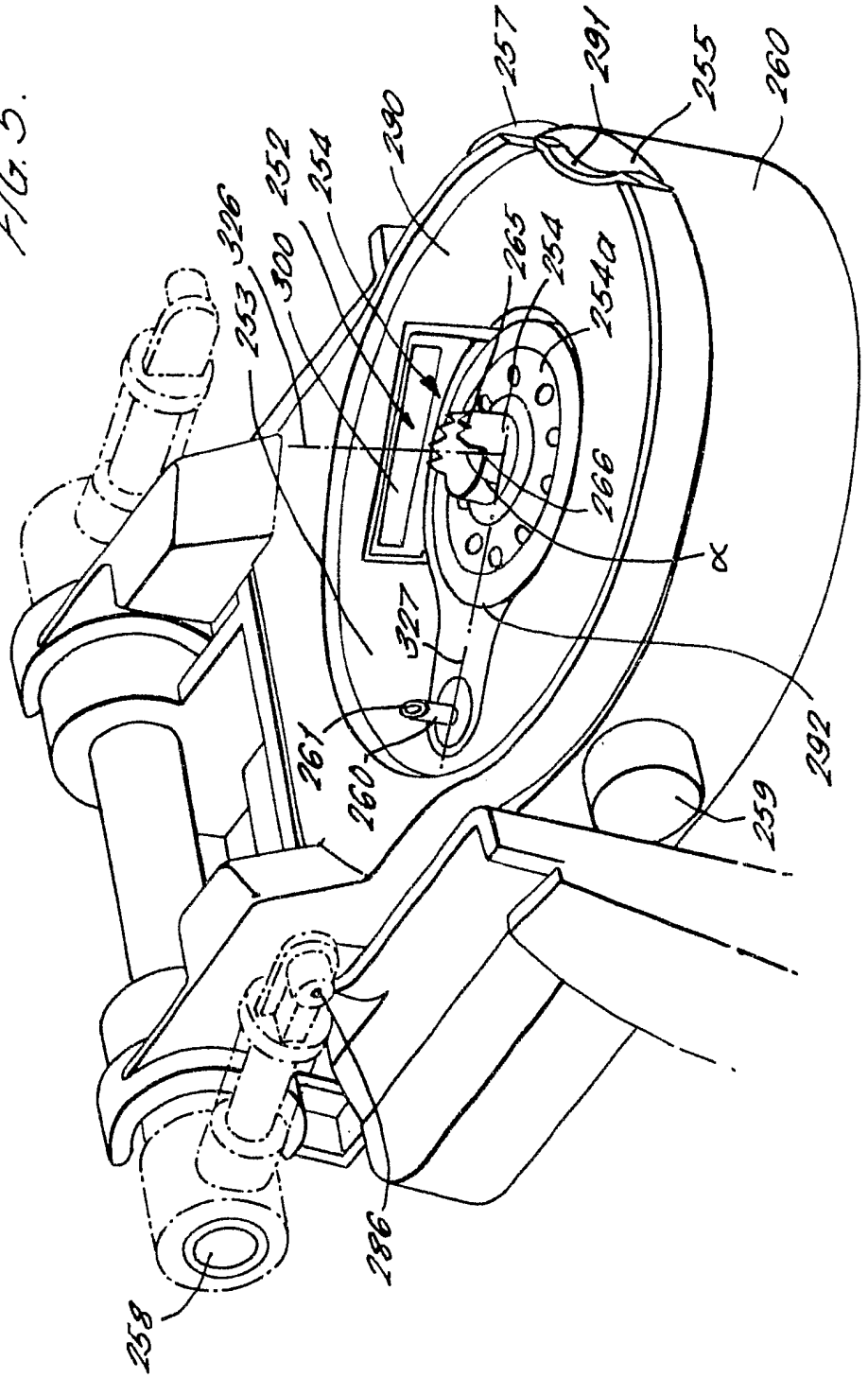
FIG. 5.
326
253
300
252
254
290
257
291
255
260
265
254
254a
266
α
327
261
260
292
259
286
258

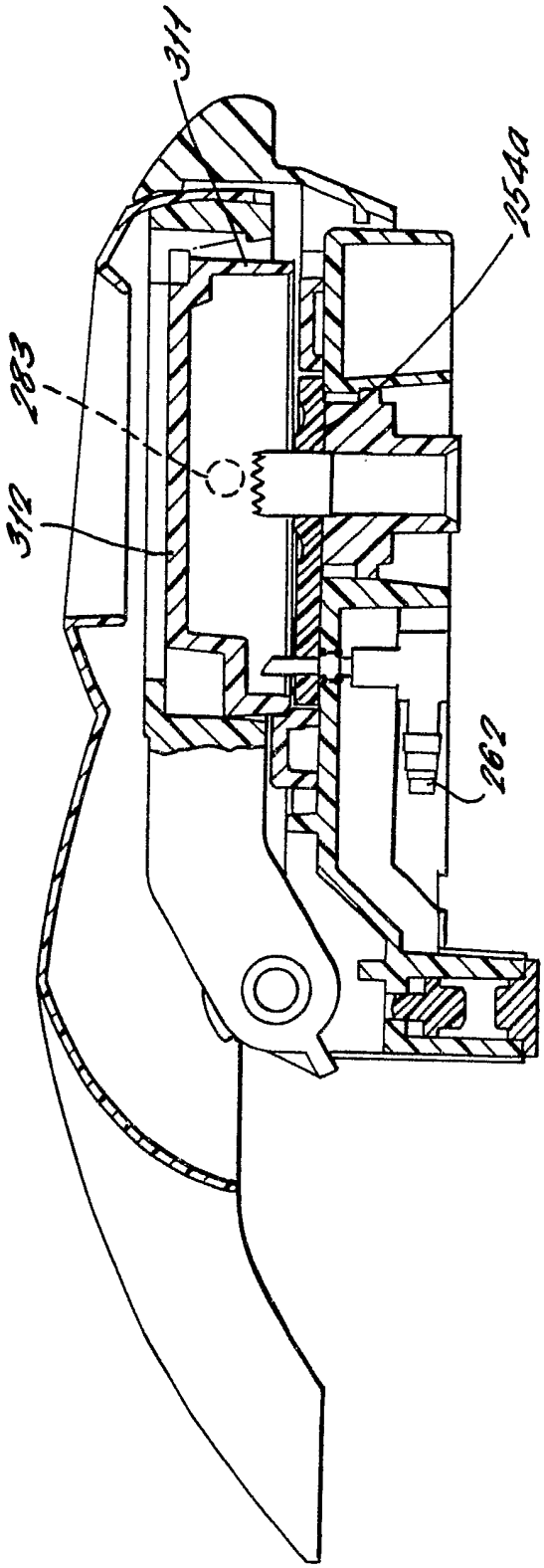

FIG. 6.

FIG. 7.

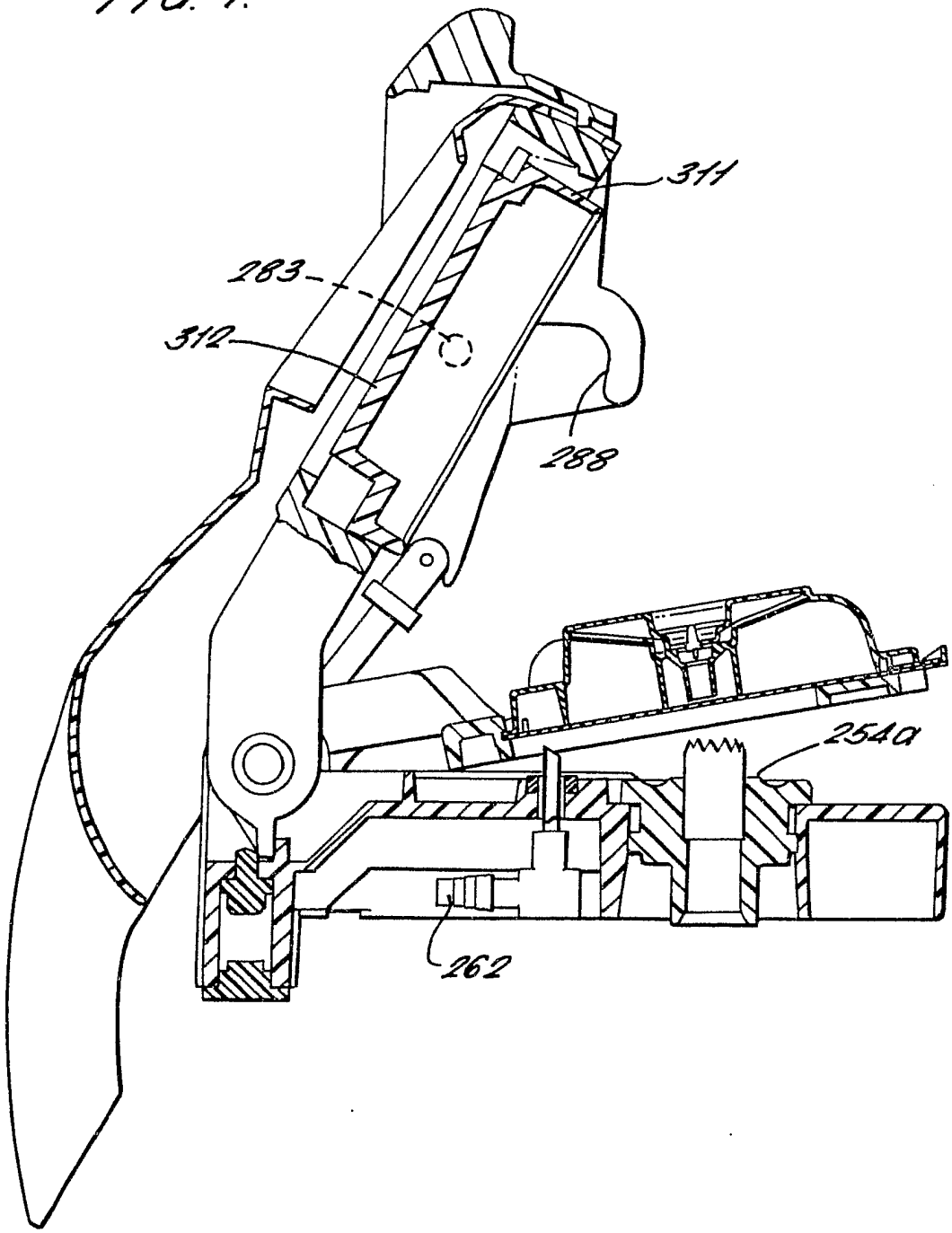

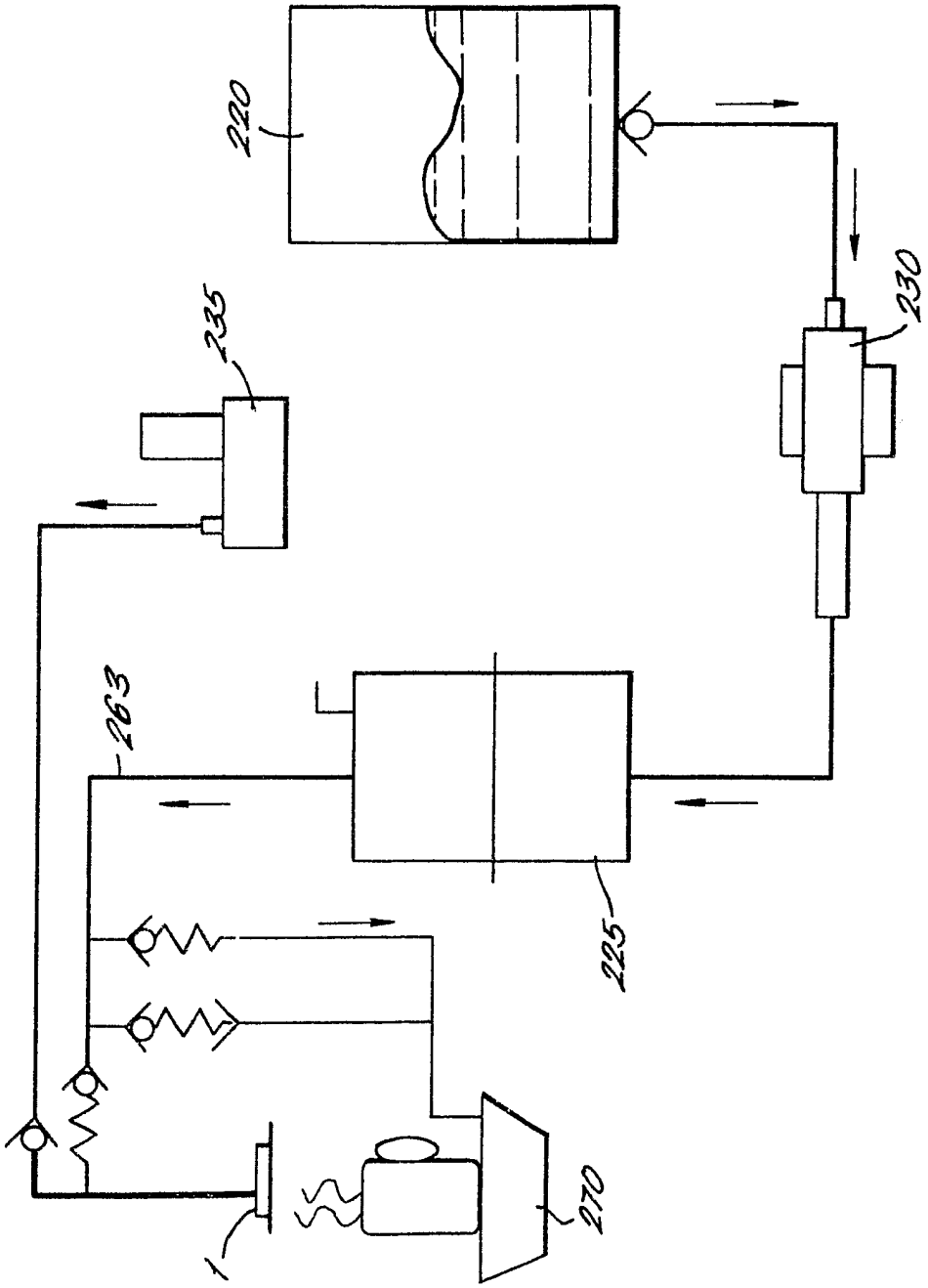

FIG. 8.

FIG. 9a.

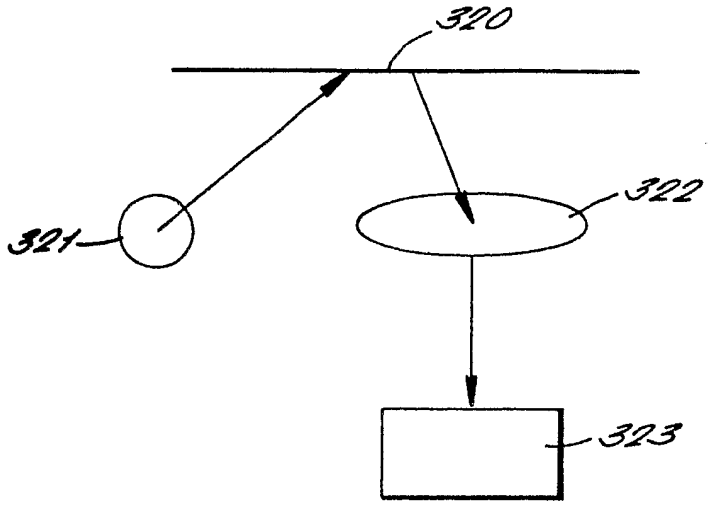

FIG. 9b.

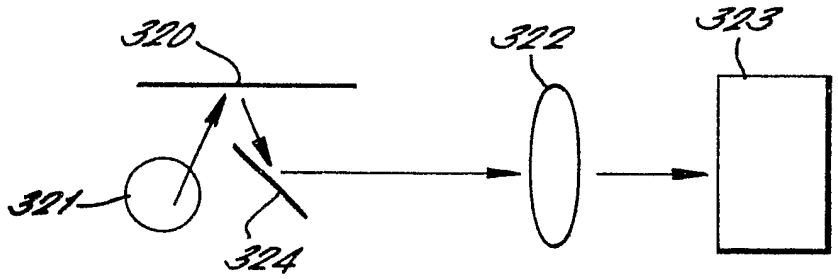

FIG. 10.

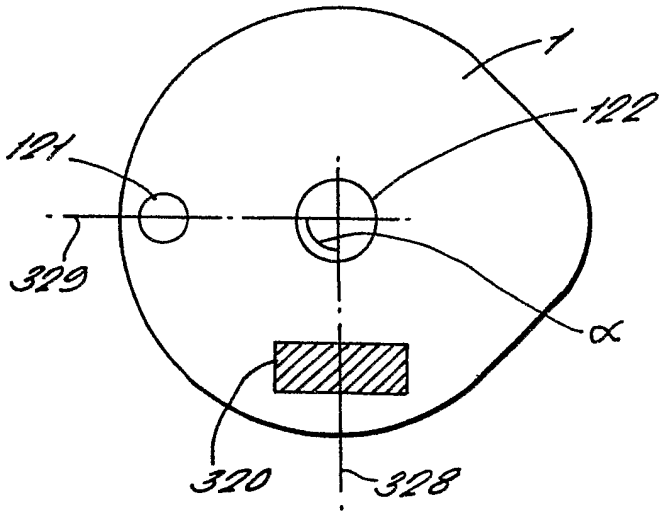

FIG. 11.

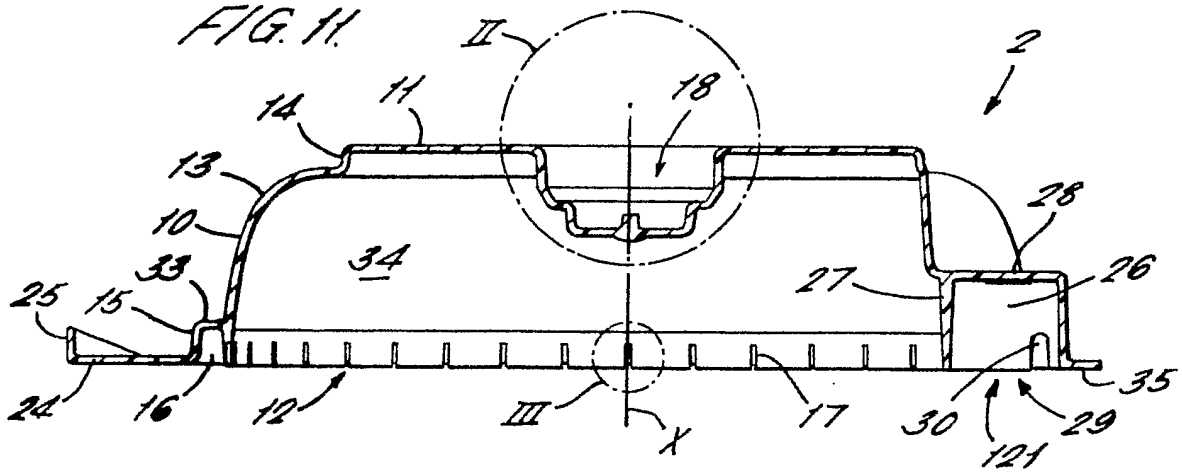

FIG. 12.

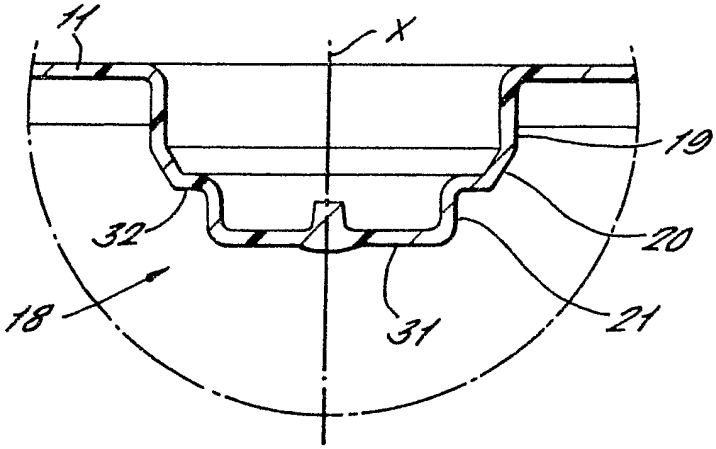

FIG. 13.

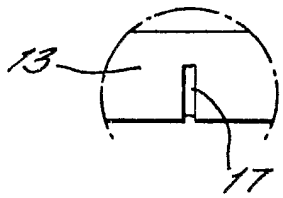

FIG. 14

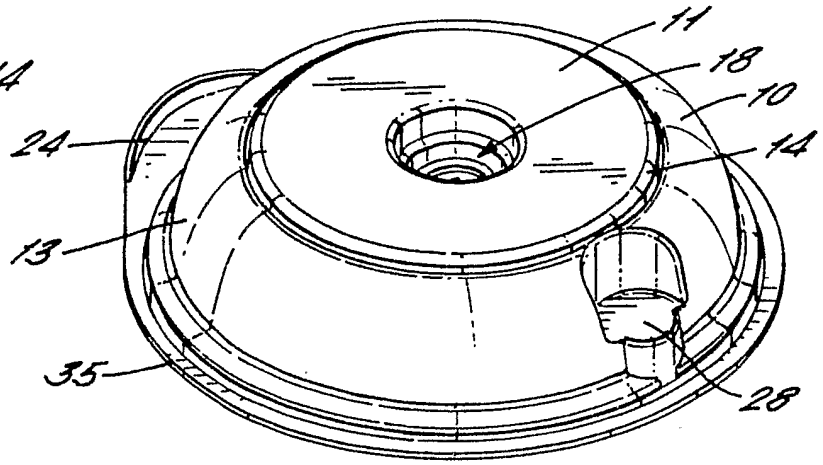

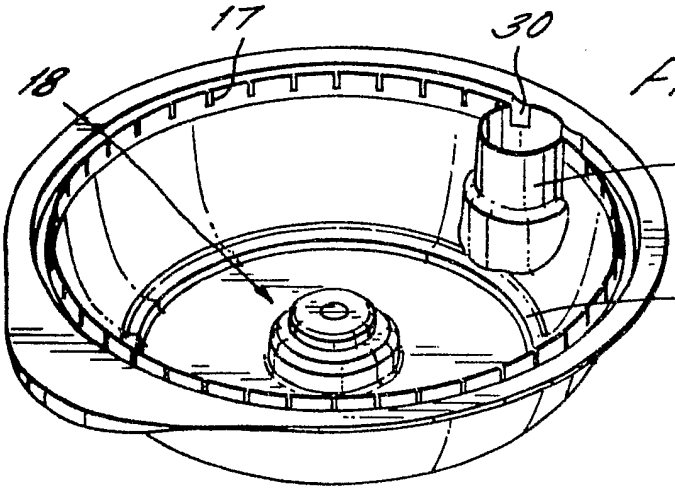

FIG. 15

FIG. 16.

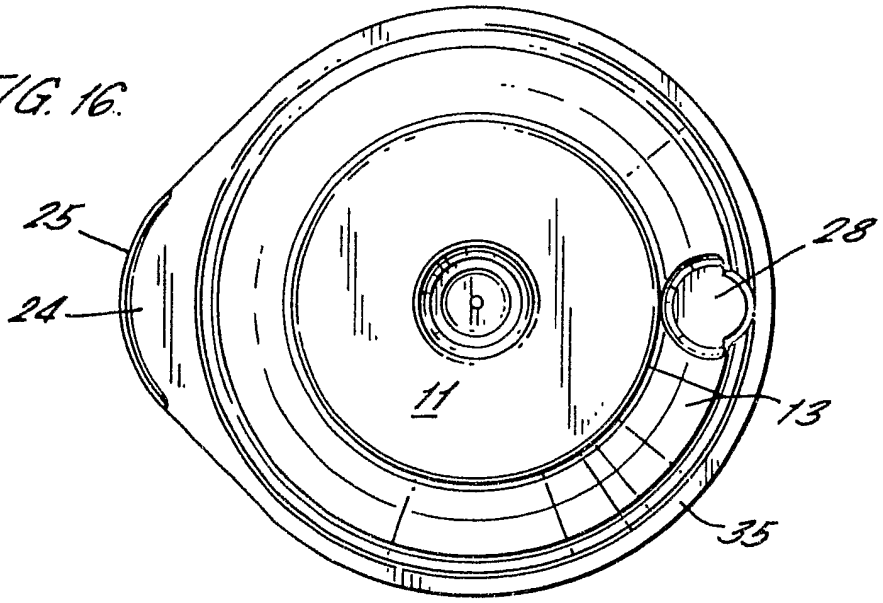

FIG. 17.

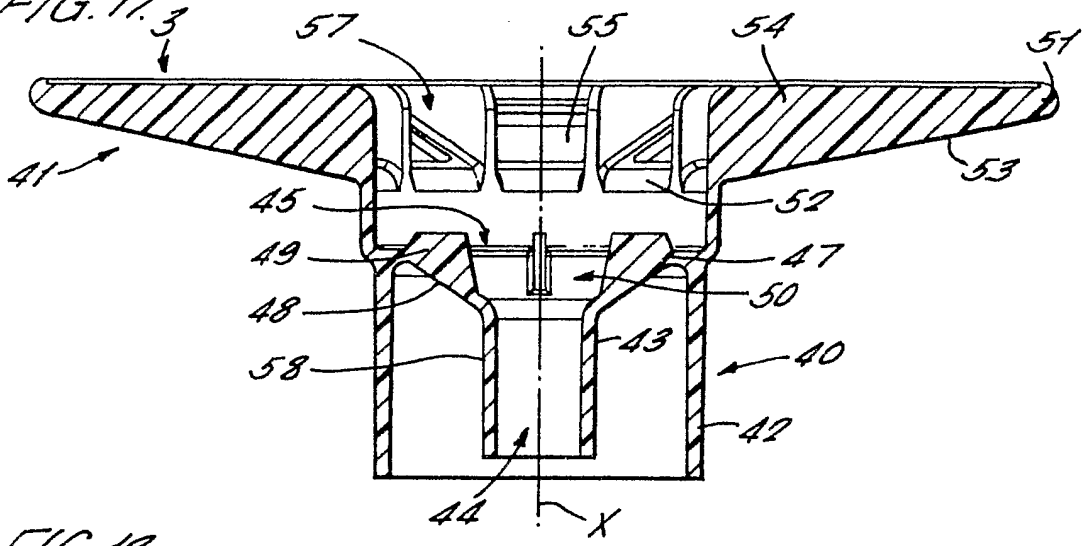

FIG. 18.

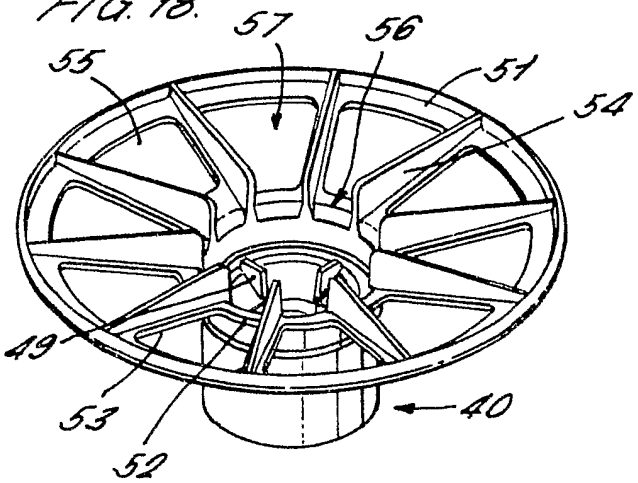

FIG. 19.

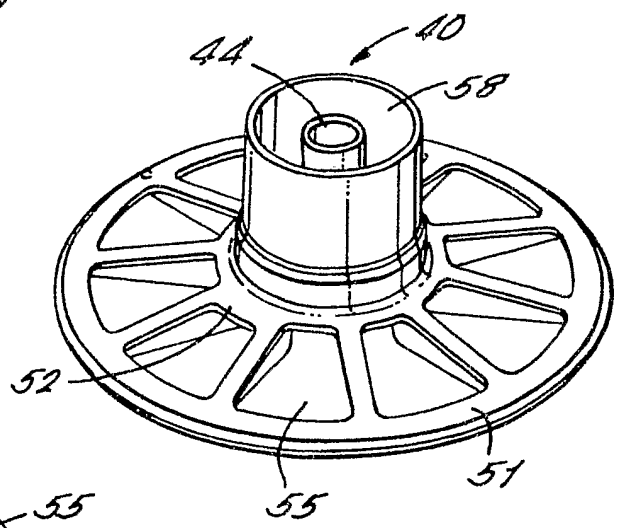

FIG. 20.

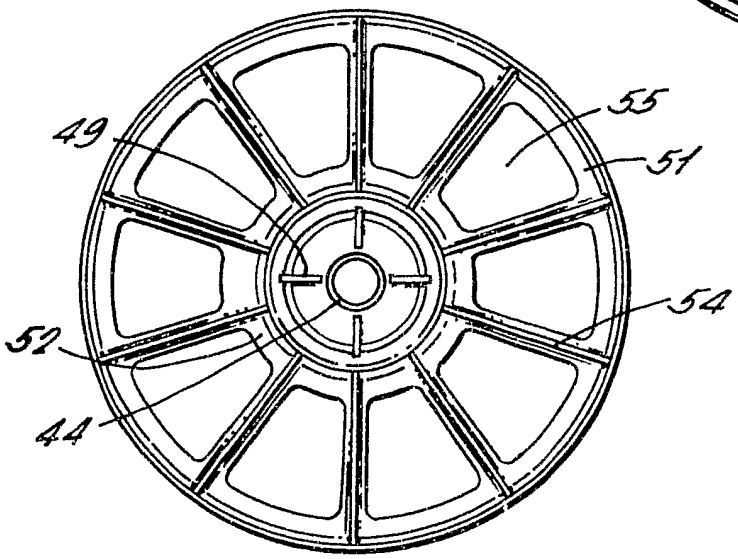

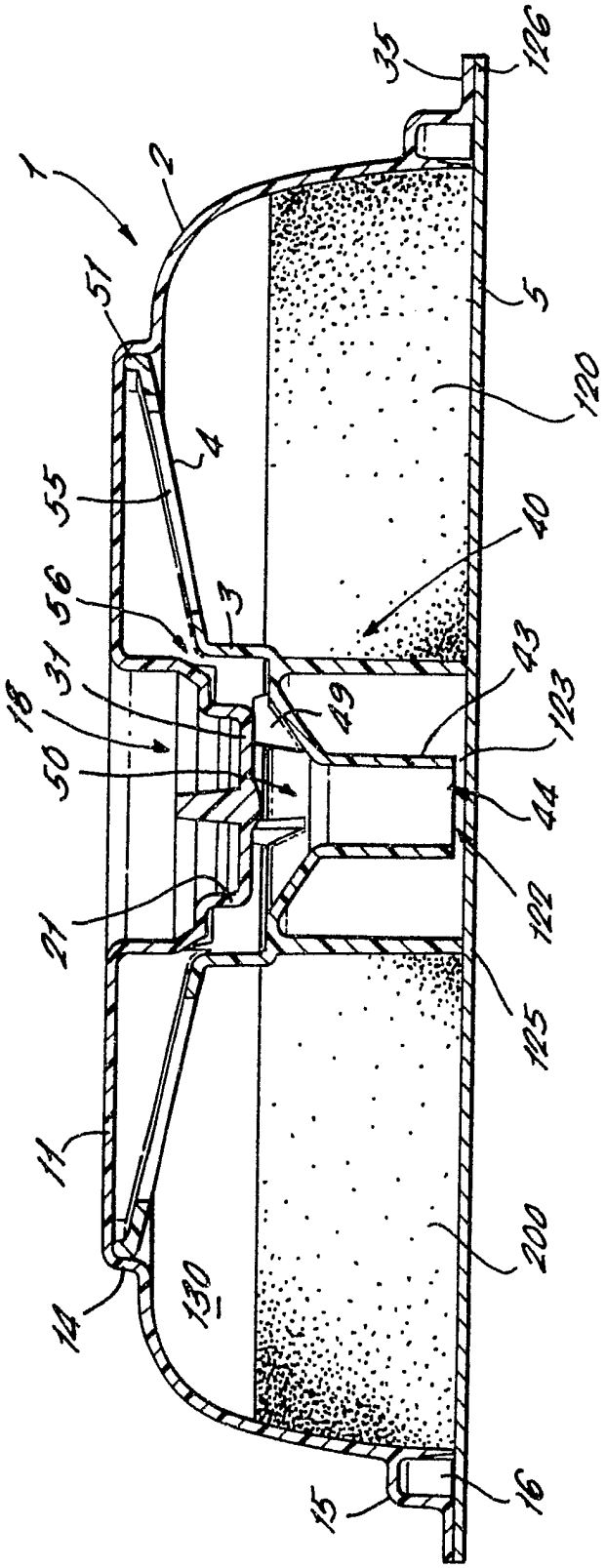
1
2
51
55
4
56
3
31
18
50
21
11
14
130
15
16
35
126
5
120
40
49
43
123
44
122
125
200

FIG. 21.

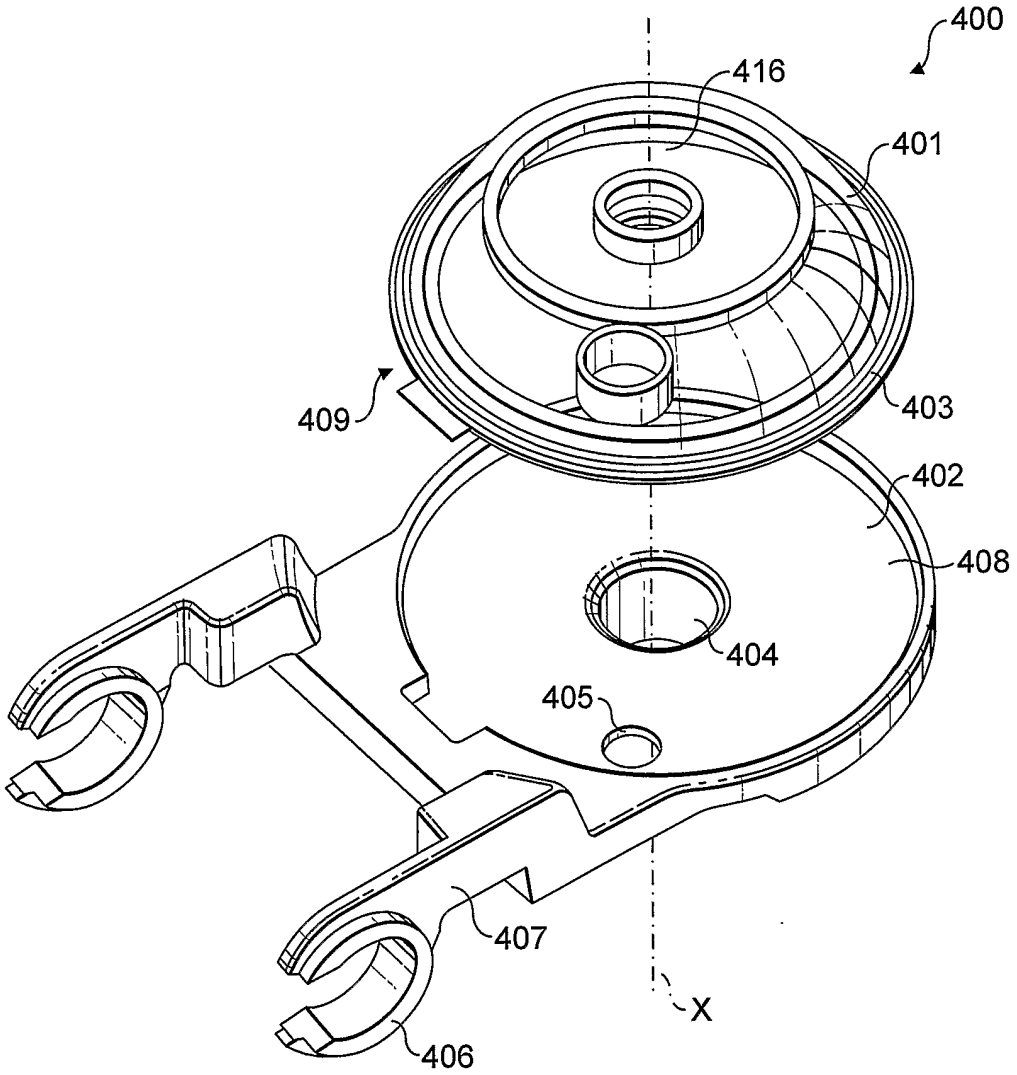

FIG. 22

IPR2024-00304
Nespresso USA, Inc. Ex. 1010
Page 67 of 73

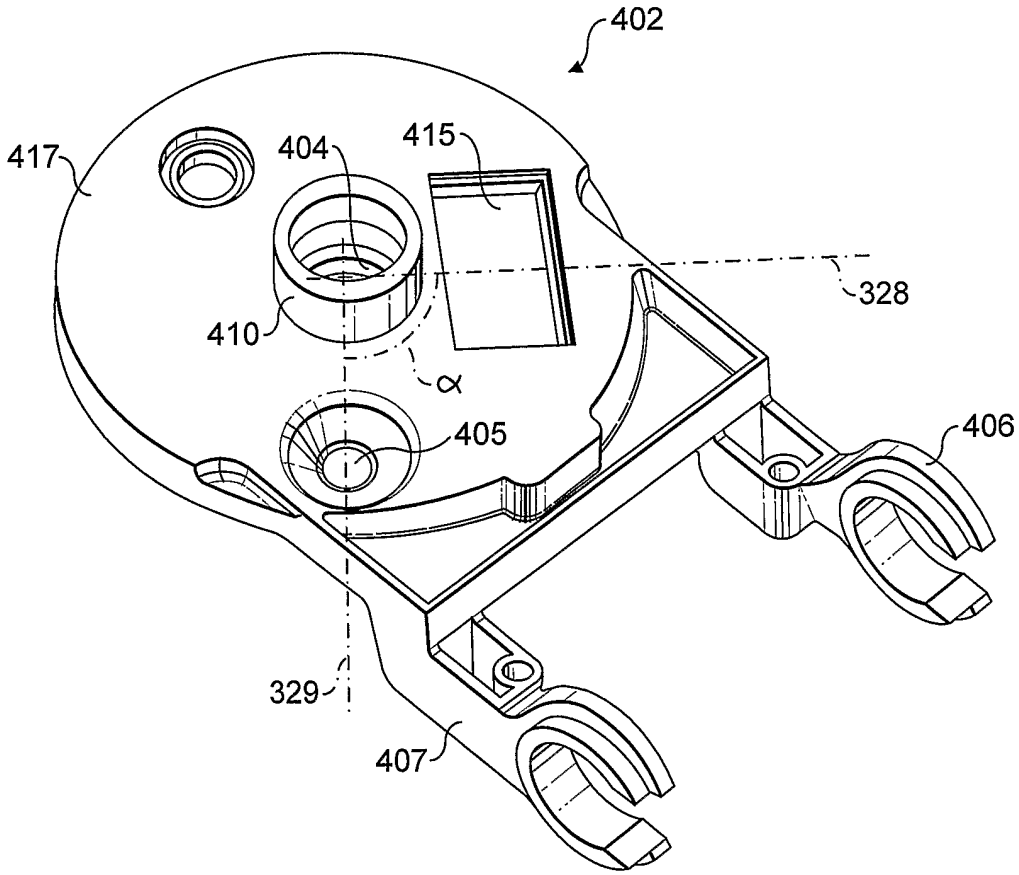

FIG. 23

IPR2024-00304
Nespresso USA, Inc. Ex. 1010
Page 68 of 73

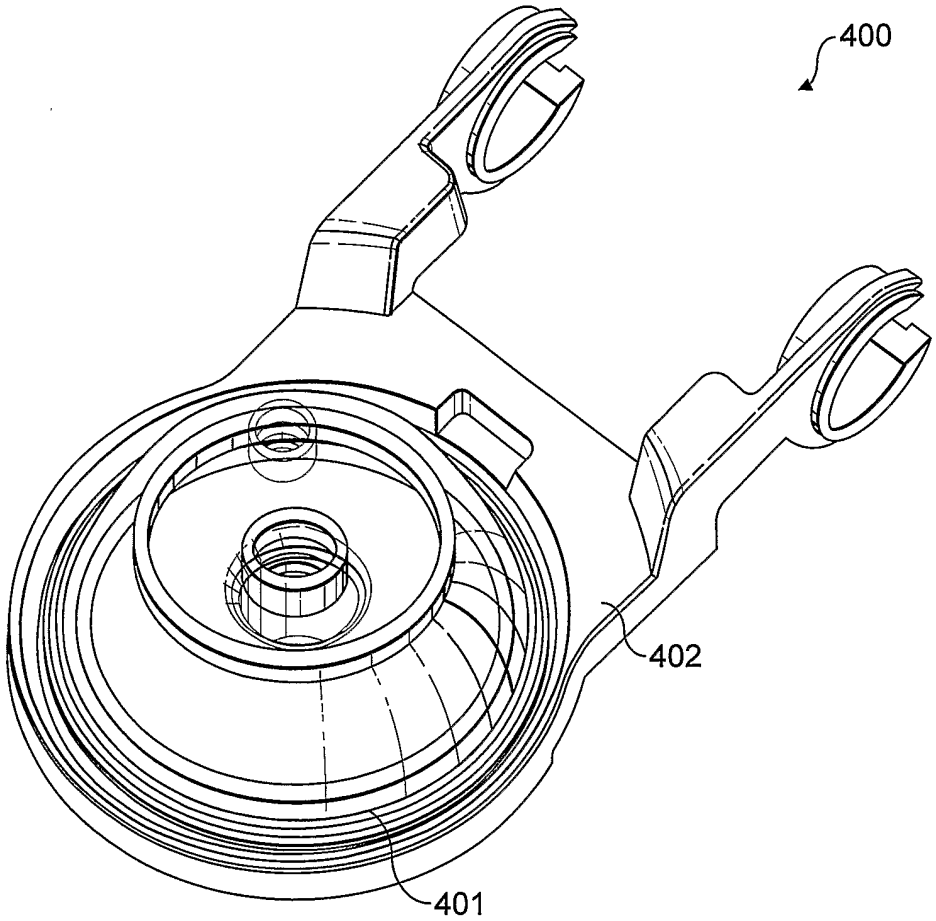

FIG. 24

IPR2024-00304
Nespresso USA, Inc. Ex. 1010
Page 69 of 73

FIG. 25.

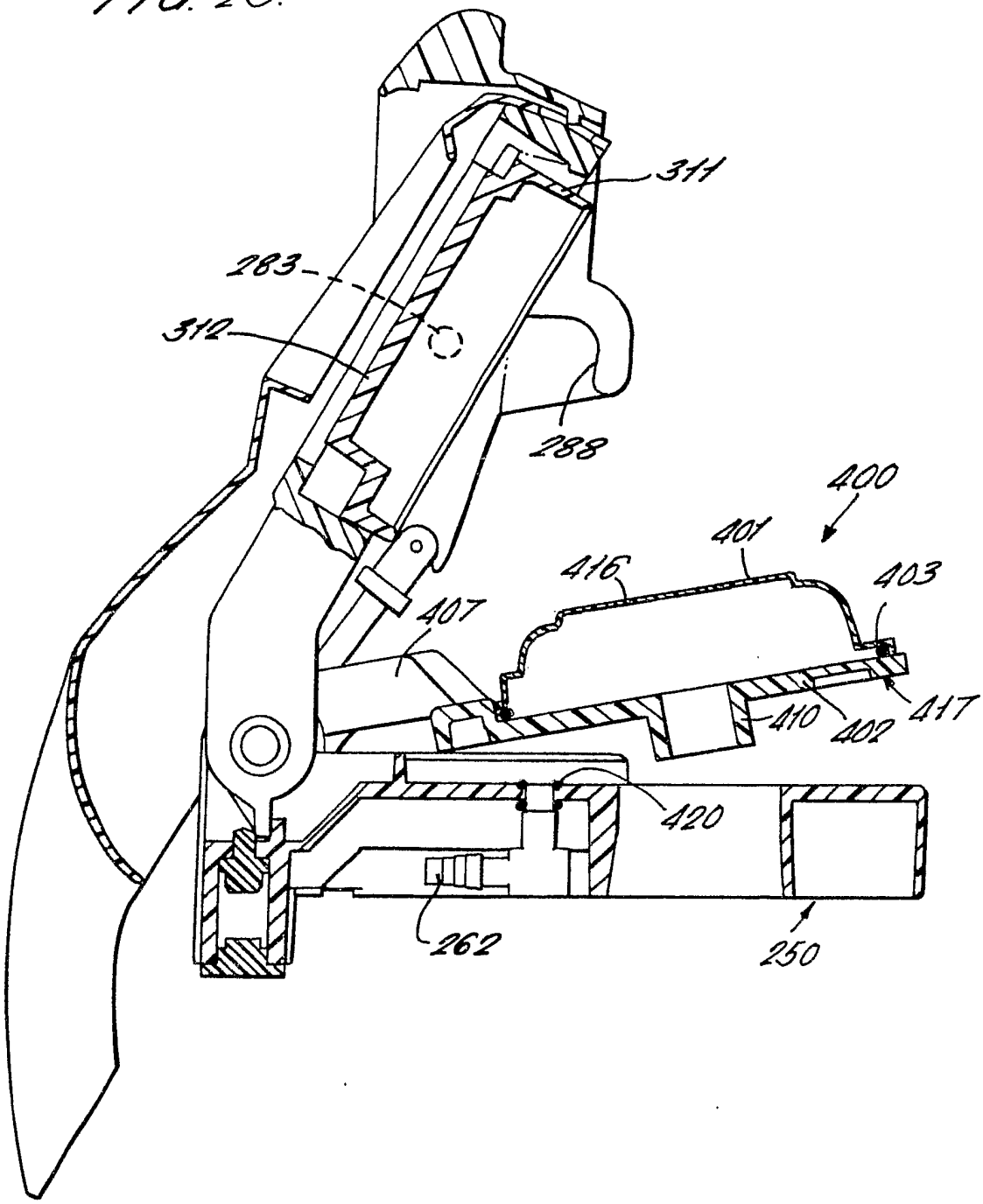

INTERNATIONAL SEARCH REPORT

PCT/GB2005/000469

A. CLASSIFICATION OF SUBJECT MATTER

IPC 7 A47J31/06 A47J31/40

According to International Patent Classification (IPC) or to both national classification and IPC

B. FIELDS SEARCHED

Minimum documentation searched (classification system followed by classification symbols)

IPC 7 A47J

Documentation searched other than minimum documentation to the extent that such documents are included in the fields searched

Electronic data base consulted during the international search (name of data base and, where practical, search terms used)

EPO-Internal

C. DOCUMENTS CONSIDERED TO BE RELEVANT

Category °	Citation of document, with indication, where appropriate, of the relevant passages	Relevant to claim No.
A	DE 201 21 494 U (EUGSTER FRISMAG AG ROMANSHORN ;MAHLICH GOTTHARD (DE)) 17 October 2002 (2002-10-17) abstract figures 1-4 page 1, line 21 - line 31 page 6, line 7 - line 14 -----	1,23
A	US 5 762 987 A (PLEISCH JEAN-PIERRE ET AL) 9 June 1998 (1998-06-09) figure 10 column 9, line 53 - line 57 column 12, line 18 - line 21 -----	1,3, 23-31
A	US 2002/148358 A1 (BEAULIEU RODERICK H ET AL) 17 October 2002 (2002-10-17) abstract figure 3 -----	11-14,17
	-/--	

[X] Further documents are listed in the continuation of box C.

[X] Patent family members are listed in annex.

° Special categories of cited documents :

"A" document defining the general state of the art which is not considered to be of particular relevance

"E" earlier document but published on or after the international filing date

"L" document which may throw doubts on priority claim(s) or which is cited to establish the publication date of another citation or other special reason (as specified)

"O" document referring to an oral disclosure, use, exhibition or other means

"P" document published prior to the international filing date but later than the priority date claimed

"T" later document published after the international filing date or priority date and not in conflict with the application but cited to understand the principle or theory underlying the invention

"X" document of particular relevance; the claimed invention cannot be considered novel or cannot be considered to involve an inventive step when the document is taken alone

"Y" document of particular relevance; the claimed invention cannot be considered to involve an inventive step when the document is combined with one or more other such documents, such combination being obvious to a person skilled in the art.

"&" document member of the same patent family

Date of the actual completion of the international search	Date of mailing of the international search report
28 April 2005	06/05/2005
Name and mailing address of the ISA European Patent Office, P.B. 5818 Patentlaan 2 NL - 2280 HV Rijswijk Tel. (+31-70) 340-2040, Tx. 31 651 epo nl, Fax: (+31-70) 340-3016	Authorized officer Sainz Martinez, M

Form PCT/ISA/210 (second sheet) (January 2004)

INTERNATIONAL SEARCH REPORT

PCT/GB2005/000469

C.(Continuation) DOCUMENTS CONSIDERED TO BE RELEVANT

Category °	Citation of document, with indication, where appropriate, of the relevant passages	Relevant to claim No.
A	US 2 243 895 A (BROWN WILLIAM F) 3 June 1941 (1941-06-03) figures 7,8 page 2, column 2, line 41 - line 60 -----	11-14,17
A	US 2002/148356 A1 (BEAULIEU RODERICK H ET AL) 17 October 2002 (2002-10-17) abstract figures 7,8 paragraphs '0006!, '0007!, '0011!, '0042! -----	20-22, 28,29,31

INTERNATIONAL SEARCH REPORT

PCT/GB2005/000469

Patent document cited in search report		Publication date	Patent family member(s)			Publication date
DE 20121494	U	17-10-2002	DE	10116239	A1	17-10-2002
			DE	20121494	U1	17-10-2002
			CA	2442389	A1	10-10-2002
			WO	02078498	A1	10-10-2002
			EP	1379153	A1	14-01-2004
			JP	2004525829	T	26-08-2004
			NO	20034325	A	05-11-2003
			US	2004089158	A1	13-05-2004
			ZA	200307553	A	31-08-2004
US 5762987	A	09-06-1998	AT	171352	T	15-10-1998
			AT	260066	T	15-03-2004
			AU	671650	B2	05-09-1996
			AU	4414893	A	14-02-1994
			BR	9305586	A	02-05-1995
			CA	2111990	A1	03-02-1994
			WO	9402059	A1	03-02-1994
			DE	69321209	D1	29-10-1998
			DE	69321209	T2	18-02-1999
			DE	69333428	D1	01-04-2004
			DE	69333428	T2	22-07-2004
			DK	604615	T3	14-06-1999
			DK	870457	T3	28-06-2004
			EP	0604615	A1	06-07-1994
			EP	0870457	A1	14-10-1998
			ES	2122026	T3	16-12-1998
			ES	2213847	T3	01-09-2004
			FI	941256	A	17-03-1994
			HK	1021693	A1	24-12-2004
			HK	1012536	A1	12-05-2000
			JP	3315121	B2	19-08-2002
			JP	6511182	T	15-12-1994
			NO	940248	A	03-02-1994
			NZ	253663	A	28-05-1996
			PT	870457	T	30-07-2004
			US	5649472	A	22-07-1997
			US	5826492	A	27-10-1998
US 2002148358	A1	17-10-2002	CA	2443674	A1	24-10-2002
			EP	1377194	A1	07-01-2004
			JP	2004524126	T	12-08-2004
			WO	02082963	A1	24-10-2002
US 2243895	A	03-06-1941	NONE			
US 2002148356	A1	17-10-2002	WO	02082961	A1	24-10-2002