US 20060233921A1

(19) United States

(12) Patent Application Publication

(10) Pub. No.: US 2006/0233921 A1

(43) Pub. Date: Oct. 19, 2006

Mock et al.

(54) **DISPOSABLE PACKAGING FOR THE DISTRIBUTION OF A LIQUID PREPARATION PUMPED BY A VENTURI-EFFECT DEVICE**

(76) Inventors: **Elmar Mock**, Colobier (CH); **Andre Klopfenstein**, Neuveville (CH); **Emmanuel Simont-Vermot**, Neuchatel (CH)

Correspondence Address:
**BELL, BOYD & LLOYD LLC**
**P. O. BOX 1135**
**CHICAGO, IL 60690-1135 (US)**

(21) Appl. No.: **10/550,400**

(22) PCT Filed: **Mar. 17, 2004**

(86) PCT No.: **PCT/EP04/02749**

(30) **Foreign Application Priority Data**

Mar. 24, 2003 (EP) ..... 03006569.2

**Publication Classification**

(51) **Int. Cl.**
*A23B 7/148* (2006.01)

(52) **U.S. Cl.** ..... **426/106**

(57) **ABSTRACT**

The invention relates to a disposable packaging, for the distribution of at least one nutritional preparation, based on a nutritional liquid, comprising at least one closed chamber, containing the nutritional liquid, with means for housing a sub-assembly for aspiration and mixing of the venturi type and means for sealing the package. The invention is particularly characterized by a duct, passing through the base seal, said duct provided for a venturi nozzle which permits the extraction of the nutritional liquid inside the packaging by piercing or removal of the seal. The invention is particularly of application to the production of hot and/or emulsified drinks of the cappuccino type or similar.

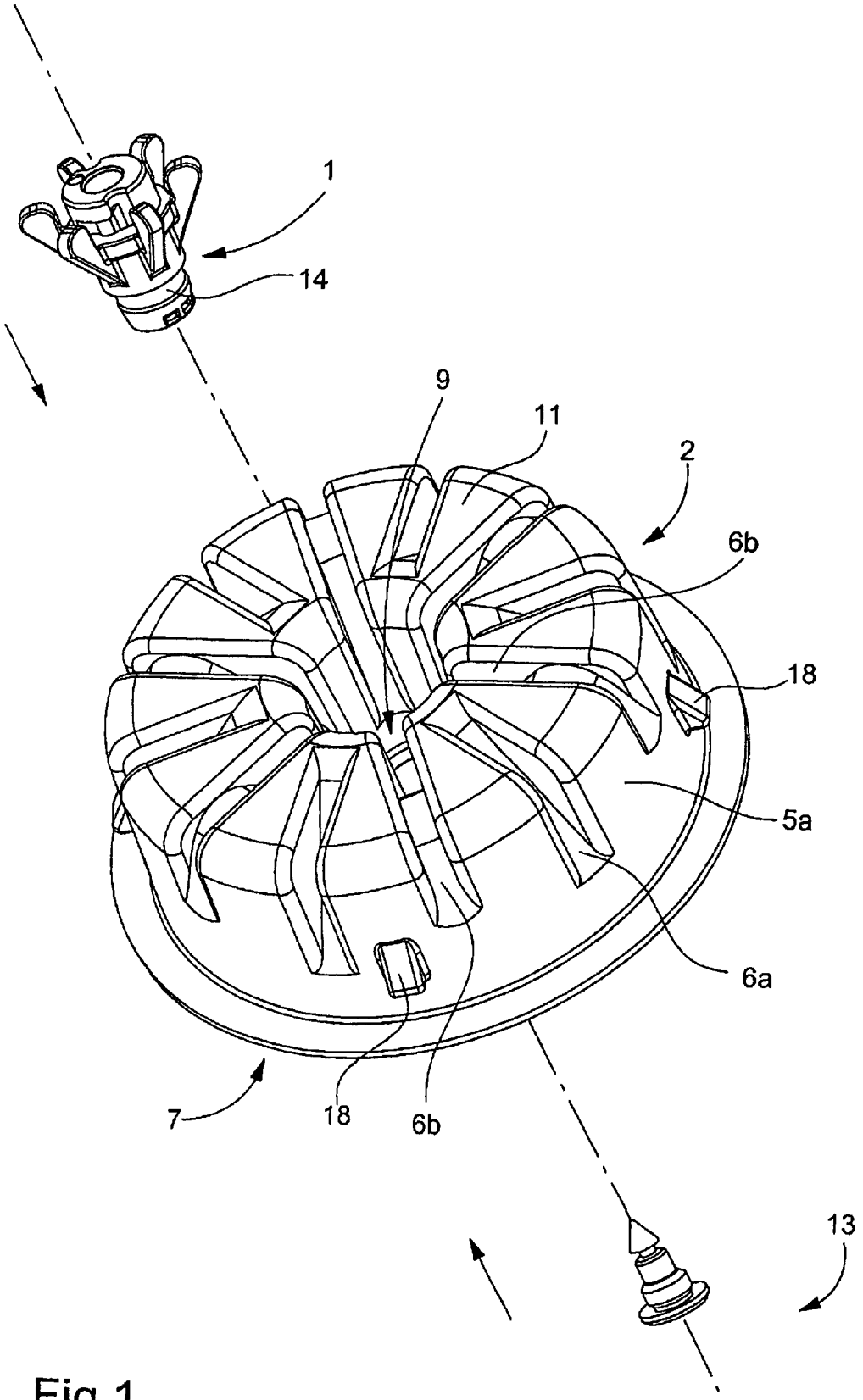


Fig.1

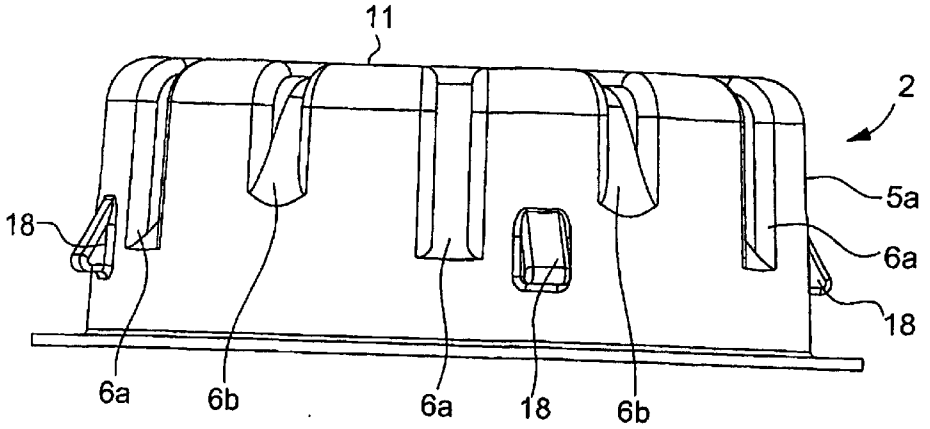


Fig.2

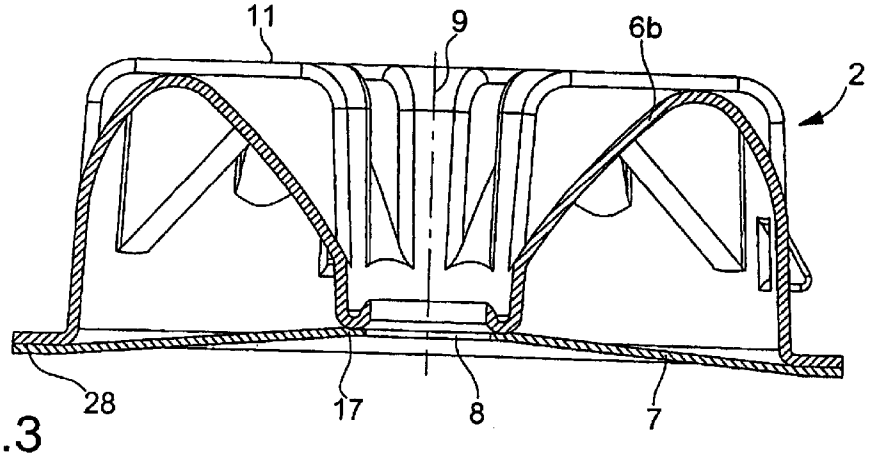


Fig.3

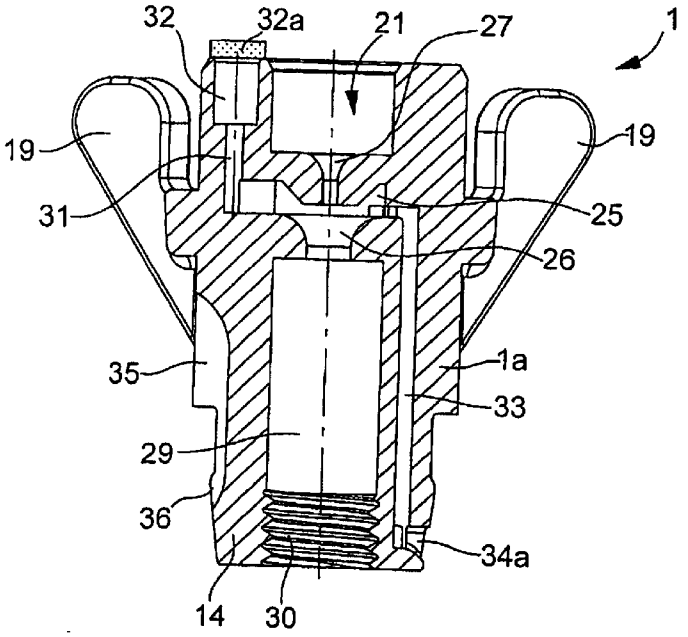


Fig.4

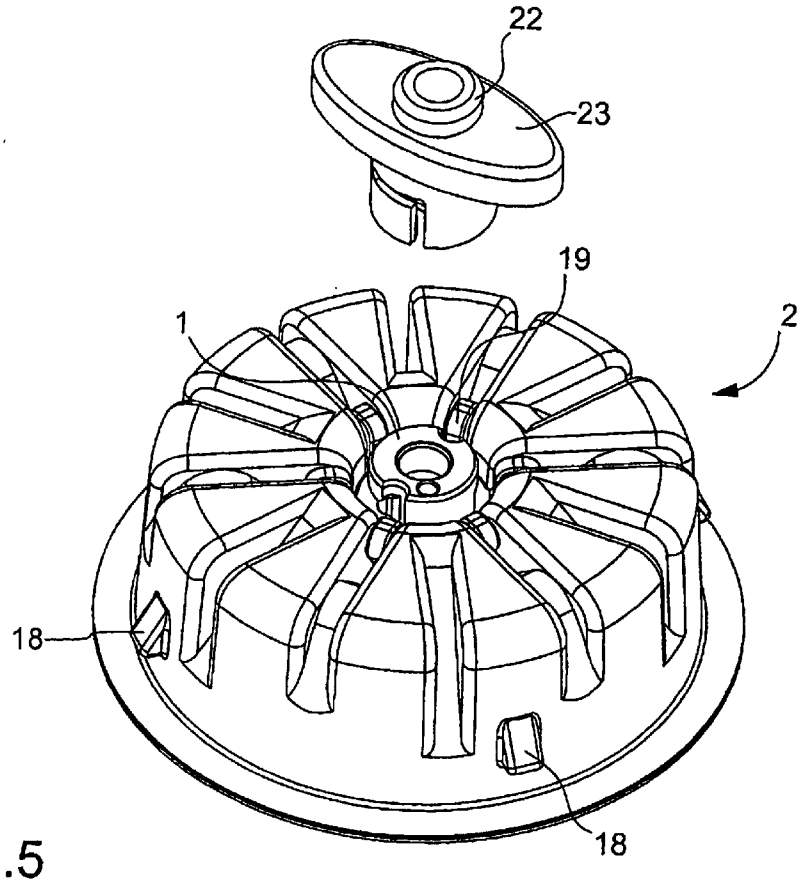


Fig.5

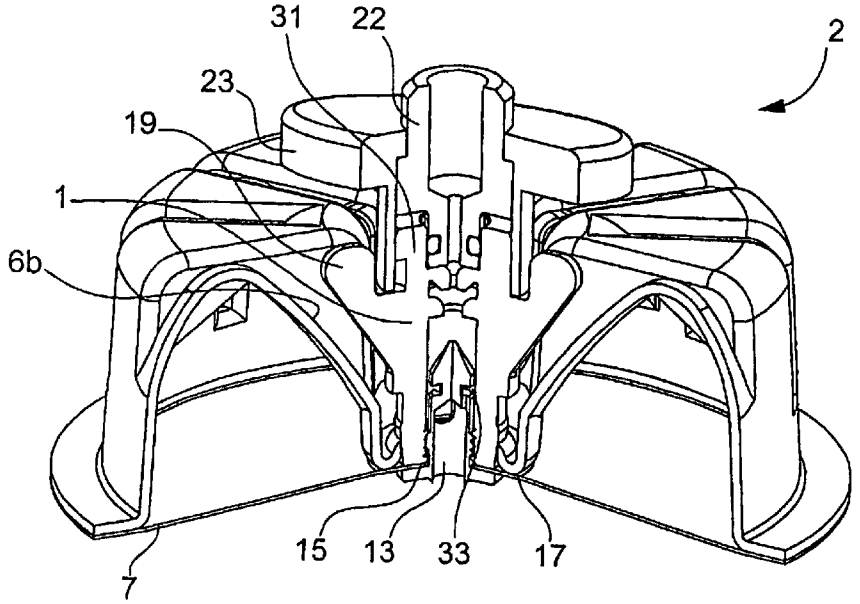


Fig.6

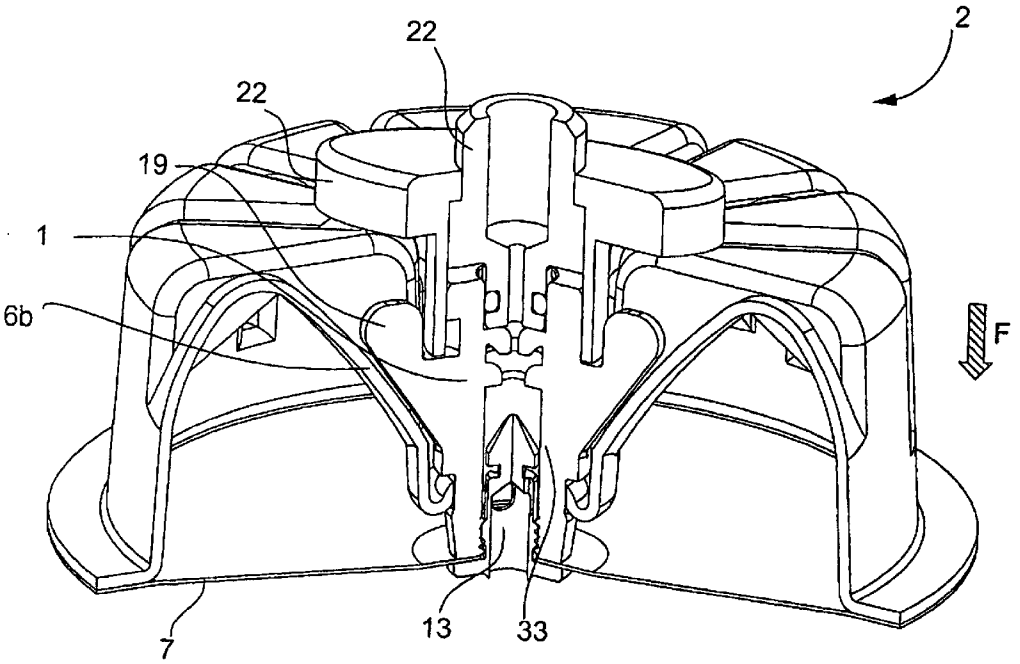


Fig.7

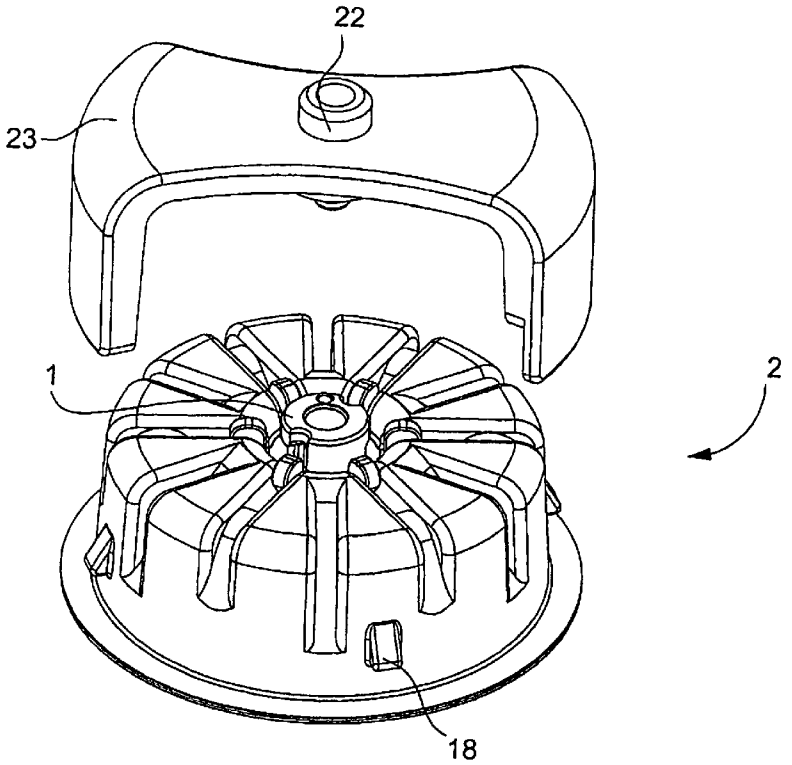


Fig.8

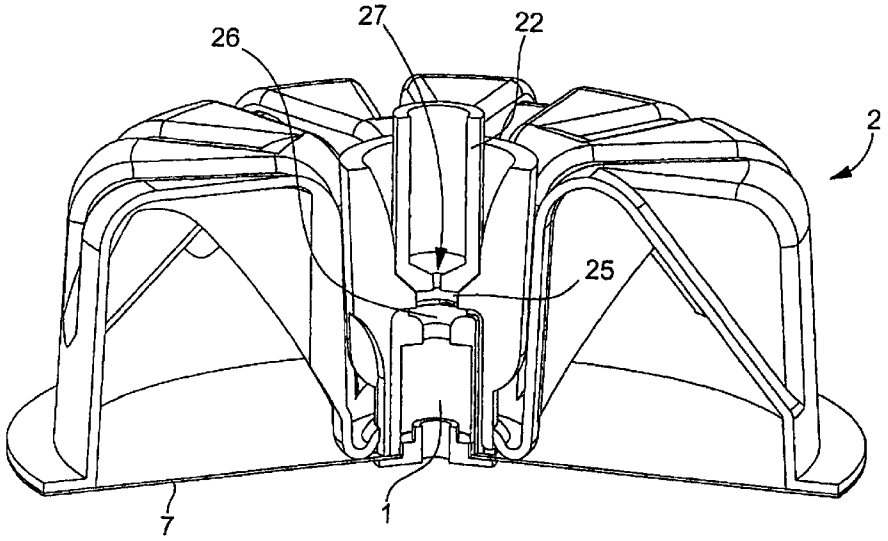


Fig.9

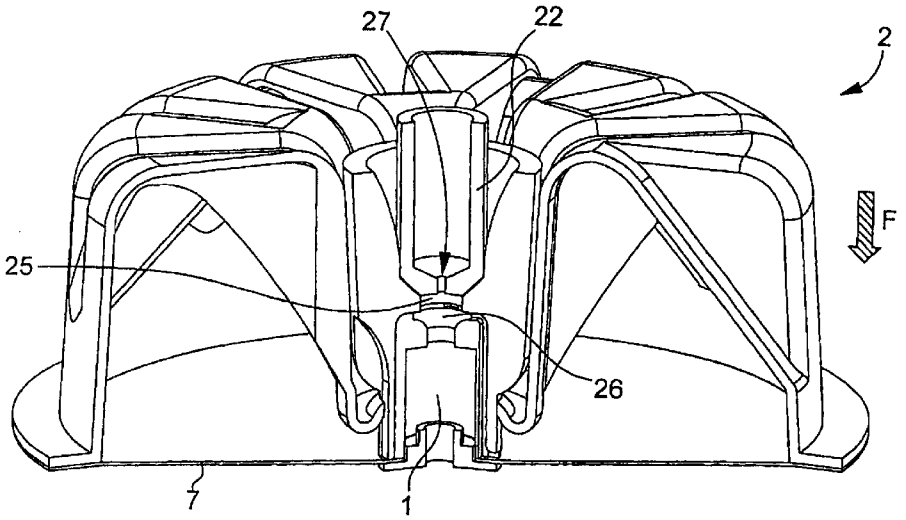


Fig.10

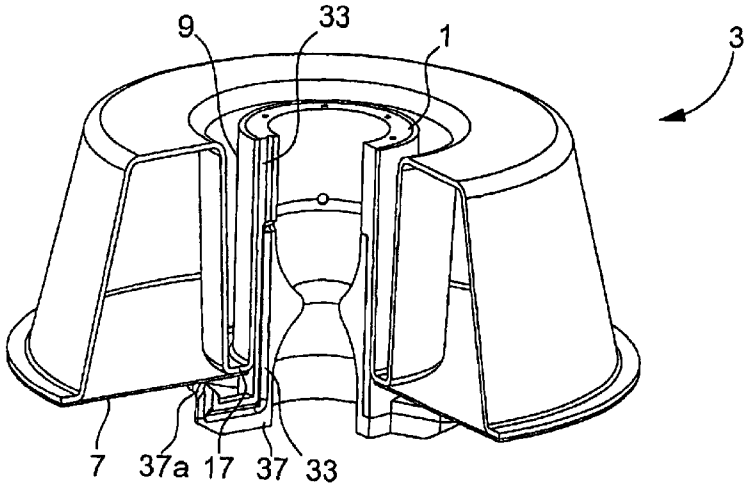


Fig.11

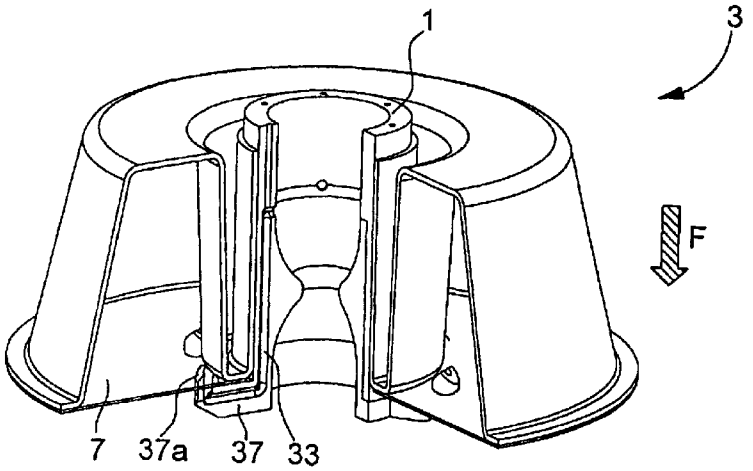


Fig.12

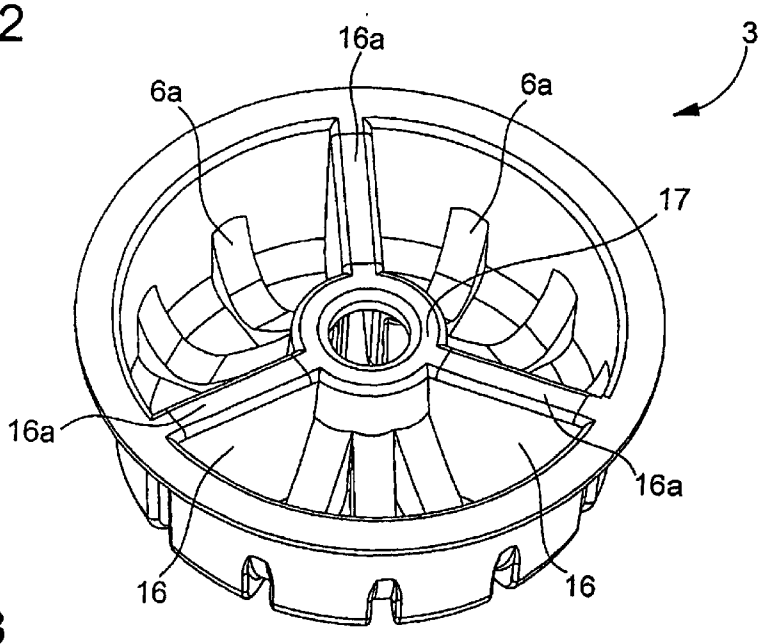


Fig.13

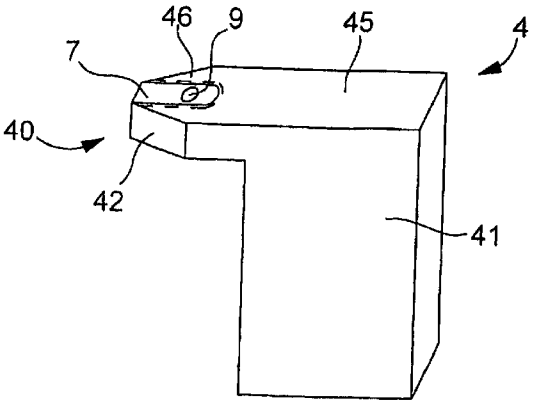


Fig.14

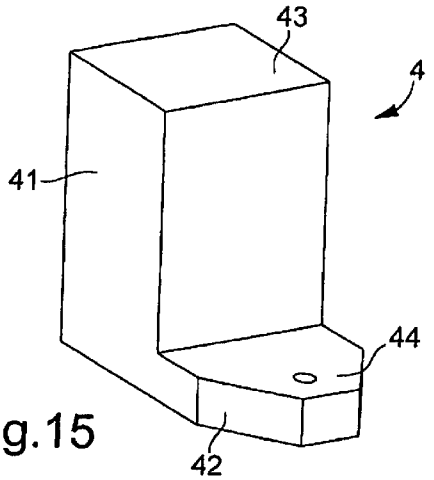


Fig.15

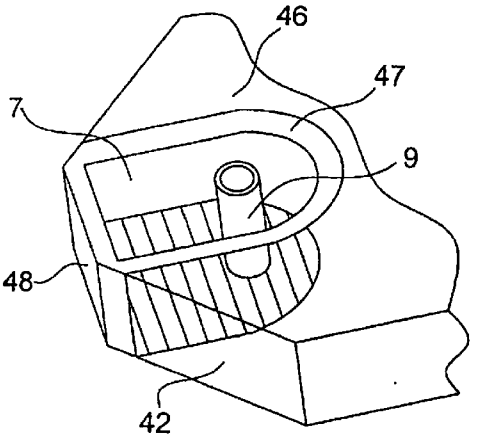


Fig.16

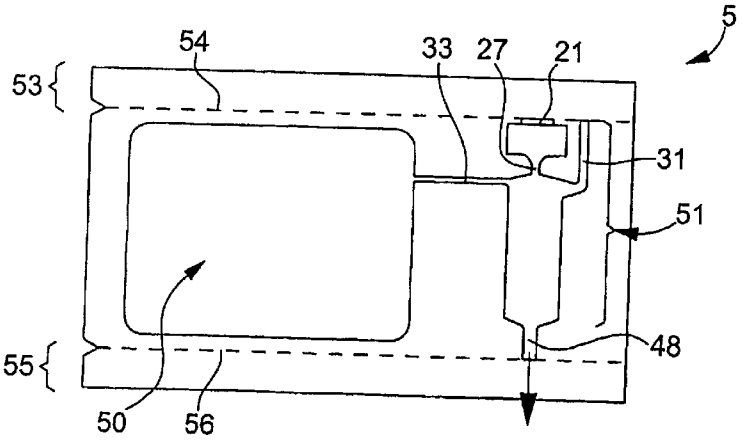


Fig.17

# DISPOSABLE PACKAGING FOR THE DISTRIBUTION OF A LIQUID PREPARATION PUMPED BY A VENTURI-EFFECT DEVICE

## BACKGROUND

[0001] The most customary way of obtaining such a frothy emulsion is to pour the desired amount of milk into a container, to immerse the steam outlet pipe in said container, shaking it up and down to get in the air necessary to form the froth. The quality of the froth obtained depends on the skill of the user who, when not a professional, may also be subject to splashing. For hygiene reasons, it will be appreciated that the pipe and the container containing the milk need to be cleaned after each use. As far as the economical aspect is concerned, the user needs to be capable of withdrawing just the right amount of milk from a standard packaging so as to avoid any wastage.

[0002] In order to avoid some of the abovementioned disadvantages and, in particular, in order to obtain a more uniform and homogeneous quality of froth, various types of venturi-effect devices have been proposed in order to act somewhat as an interface between the steam outlet of an expresso coffee machine and a container containing milk.

[0003] The simplest type of venturi-effect device, described for example in U.S. Pat. No. 4,800,805, consists in an air carrying tube secured to the steam outlet pipe and having its opening positioned below said outlet, the entity having to be immersed in a container containing the desired amount of milk. The improvement described in U.S. Pat. No. 5,335,588 consists in securing the air line to a sleeve which can itself be fitted to the steam outlet pipe, the entity still having to be immersed in a container containing the milk.

[0004] Patent EP 0 243 326 describes, for example, a venturi-effect accessory that can be fitted to an expresso coffee machine, comprising a great many parts making it possible, in an aspiration chamber, to have an arrival of pressurized steam which, through a venturi effect, entrains air along a first duct and entrains along a second duct milk arriving from a reservoir incorporated into the machine or aspirated from a standard packaging by means of an immersed connecting dip tube, this mixture then being injected into an emulsifying chamber before leaving in the form of a frothy emulsion.

[0005] An improvement proposed in U.S. Pat. No. 5,265,519 corresponds to a simpler design, with fewer parts to be assembled in order to form the venturi-effect device, and comprises an anti-splash cap at the frothy emulsion ejection orifice. When the packaging, the capacity of which is generally one liter, is used in industrial catering, the food liquid is used up quickly enough that there is no need to take special precautions regarding its shelf life, for example keeping it cold. For hygiene reasons, it is nonetheless still necessary to clean the dip tube, and periodically, the venturi-effect device. This device also has the disadvantage of not allowing the food liquid contained in the packaging to be used up completely.

[0006] Patents EP 0 803 219 and EP 0 803 220 B1 also describe a device for preparing an emulsified milk or cappuccino by pumping by means of two tubes immersed in a container of the "cardboard carton" type and connected to a venturi-effect device. This device also requires frequent cleaning and requires the milk package to be kept at a refrigerated temperature by a cooling system associated with the device.

[0007] Patent application WO 02/087400 relates to the preparation of a frothed drink using a capsule containing an ingredient that can be frothed. The principle is to inject a liquid into the capsule in order to perform the mixing, to release the mixture through the capsule into a receptacle and then inject further liquid in the form of a jet so as to produce a frothed liquid in the receptacle.

[0008] Patent application WO 01/58786 relates to a cartridge for preparing a frothy drink which comprises, near or directly at the drink outlet, restriction means making it possible to produce a jet of drink, at least one air inlet and means for generating a pressure reduction. The mixing of the drink is performed in a mixing compartment situated upstream of the restriction means and sufficient excess pressure is required in the compartment to force the drink through the restriction means. Such a cartridge is suitable for extracting a drink from a substance of the roasted-ground type.

[0009] When the packaging is used in a communal or family setting, and with the knowledge that, for example, a liter of milk will make 30 to 50 helpings of cappuccino, it is necessary either to put the packaging back in a refrigerator after every use, or to place it in a mini-refrigerator with which the coffee machine is equipped, it then being possible for the dip tube to remain constantly connected. This solution has the advantage of reducing the number of times the dip tube has to be cleaned, but has the disadvantage of making the equipment necessary for producing the frothy emulsion more expensive and therefore of increasing the cost price of the final consumer product.

## SUMMARY

[0010] The present invention relates to disposable packagings containing one or several doses of a liquid that can be withdrawn by pumping, particularly using a venturi-effect device so that they can be distributed, for example, in heated and/or frothed and/or emulsified form depending on the nature of said liquid. Although the invention preferably relates to the food domain for the production of frothed milk-based drinks, it is not in any way limited to the food domain and can be applied to any product capable of being pumped from a packaging such as cosmetic products in the form of pumpable creams or the like.

[0011] The invention also relates to a method of producing a preparation, such as a drink, possibly a frothed drink, from a pumpable liquid, for example a food liquid, contained in a disposable packaging

[0012] To make the following description more clear, the expression "food liquid" is intended to mean an edible base product intended to be converted and/or modified to produce a "food preparation" in liquid form having the desired taste qualities. The food liquid contained in the packaging may be in the form of a whole product, of a concentrate, of an extract such as milk, cream, tea, coffee, a soup concentrate or a flavorsome extract, for example using vanilla.

[0013] The expression "pumpable liquid" is intended to mean any liquid or semiliquid preparation the viscosity of which allows it to be pumped.

[0014] A "venturi-effect device" is intended to mean an aspiration subassembly comprising a chamber into which there opens a canal for carrying a carrier fluid pressurized by a constriction so as to create an aspiration effect as a result of the depression at the outlet from a constriction in at least one canal connecting said chamber and the packaging containing the food liquid, it being possible for the carrier fluid to be a liquid or a gas, steam, hot or cold water or air or a mixture thereof. This aspiration subassembly makes it possible to modify the liquid and distribute it in the form of a heated and/or frothed or emulsified preparation combined with a gas, such as chilled milk, milk-based drinks, for example flavored, coffee, tea, chocolate, soup or preparations for cappuccinos or mochaccinos.

[0015] The invention will be illustrated by way of example using packagings containing milk intended to be heated and frothed to obtain a "cappuccino", by fitting to such a packaging a venturi-effect device that is to be attached to the pressurized-steam outlet pipe of an expresso coffee machine so as to obtain a frothy air/milk/steam preparation. In the case of a packaging containing a food liquid simply requiring heating, the venturi-effect device obviously will have no air intake.

[0016] The main object of the invention is therefore to alleviate the disadvantages of the aforementioned prior art by providing a novel type of packaging making it possible, more quickly and more easily, to heat and also, preferably, at the same time to froth, a pumpable preparation such as a food liquid under better hygienic and economic conditions.

[0017] With a frothable product, such as milk contained in such a packaging, it is thus possible to obtain a froth which is uniform in quality and in quantity without requiring modifications to an expresso coffee machine that generates pressurized steam, or any other machine that generates fluid fed into the chamber of the venturi-effect device.

[0018] To this end, the subject of the invention is a disposable packaging for dispensing at least one food preparation or the like from at least one pumpable liquid contained in at least one closed compartment of the packaging. The packaging is characterized in that it comprises means for accepting an aspiration and mixing subassembly of the venturi type and means of sealing the packaging prior to use, for example by means of a welded seal.

[0019] In one embodiment, the means for accepting the aspiration subassembly comprise a passage forming, for example, a hollow shaft. The passage is arranged in such a way as to allow relative displacement of the aspiration and mixing subassembly through said passage, facing a hole formed in the seal.

[0020] In this case, the sealing means may advantageously be intended to collaborate for the purposes of opening with the aspiration and mixing subassembly upon a relative displacement of the aspiration and mixing subassembly in said passage so as to place the compartment in communication with the aspiration subassembly.

[0021] In a possible alternative, the means for accepting the aspiration subassembly may be arranged in such a way as to house said subassembly permanently without relative displacement; said subassembly is then already in communication with the compartment, and the sealing means are arranged in such a way as to isolate both the compartment and the subassembly from the external environment. In this case, the opening of the sealing means has the effect of uncovering the aspiration and mixing subassembly.

[0022] In the event that the aspiration subassembly is displaced in order to perform opening, the aspiration subassembly is secured to the housing and able to be displaced between a closed position in which the aspiration and mixing subassembly is disengaged from the sealing means and an opening position in which the aspiration and mixing subassembly engages the sealing means for the purposes of opening.

[0023] According to another feature of the invention, the packaging is formed of a body comprising a hollow shaft forming the housing for the aspiration and mixing subassembly, the body delimiting at least said compartment, and the sealing means comprising a welded seal which closes off at least said compartment.

[0024] According to yet another feature of the invention, the sealing means comprise a seal sealing ring which is welded to the edge of the hollow shaft and forced undone by a relative displacement of the aspiration and mixing subassembly within the hollow shaft.

[0025] In the remainder of the description, the means which allow the packaging to be kept closed, and those which allow it to be opened so as to place the nozzle in communication with the liquid contained in the packaging will be denoted "fixing and opening means".

[0026] Another subject of the invention is a disposable packaging for dispensing at least one pumpable liquid by means of an aspiration and mixing subassembly termed "venturi nozzle" that can be fitted onto the pipe of a pressurized-fluid generator. The packaging comprises a side wall, an end wall and a closure element comprising a welded seal. The packaging is characterized in that the seal comprises a hole and in that the end wall of the packaging has, passing through it, a hollow shaft able to accommodate the venturi nozzle, the end of said hollow shaft being welded to the edge of the hole of the seal where the food liquid will be withdrawn when the packaging is placed in an inverted position and given a relative translational movement with respect to the nozzle.

[0027] The packaging according to the invention may be produced with very diverse shapes and in very diverse materials. It may be rigid, for example made of thermoforming a plastic or stamping thin metal sheet, for example made of aluminum, and have an outline that is, for example, circular, rectangular or hexagonal.

[0028] The packaging may also be flexible and form a flexible pouch comprising, at its center, on one of its sides or at one of its ends, the aspiration subassembly.

[0029] The packaging may have a capacity of a few milliliters to a few tens of milliliters corresponding, for example, to the production of one or two cappuccinos when the liquid is milk, the packaging has the shape of a circular capsule with the hollow shaft at its center, the seal then forming the upper element closure of said capsule.

[0030] The assembly may also have a larger capacity, for example a capacity of a few deciliters. In order to avoid having a hollow shaft that is too long, the seal is arranged above a small-volume reserve in communication with the

inside of the packaging, said reserve being formed laterally by an extension of the upper closure element, by a side wall and by an end wall parallel to the end wall of the packaging.

[0031] The aspiration subassembly associated with a packaging according to the invention consists of a nozzle comprising at least one liquid aspiration duct, at least one gas carrying duct where there is a desire to obtain a frothy preparation, at least one pressurized-fluid inlet, at least one aspiration chamber in which the ducts communicate, and at least one outlet for dispensing the preparation.

[0032] The withdrawal of the liquid to feed the nozzle may be performed in different ways according to the type of nozzle used.

[0033] According to a first embodiment, the hole made in the seal has a diameter smaller than the inside diameter of the hollow shaft so as to form a ring extending into the hollow shaft, said ring being intended to be welded or trapped at the end of a venturi-effect nozzle, so that by imparting a relative translational movement to the packaging in order to move the nozzle closer to the seal, particularly by imparting a downward movement to the packaging with respect to the nozzle held in a stationary position, or vice versa, the seal is completely or partially undone from the hollow shaft so as to place the liquid contained in said packaging in communication with at least one duct of the nozzle communicating with the aspiration chamber.

[0034] According to a preferred embodiment, said packaging is placed in communication with at least one duct of the nozzle communicating with the aspiration chamber and at least one duct communicating with the outside so as to equalize the pressure and/or so as to produce a frothy preparation.

[0035] In a preferred embodiment, the seal is domed toward the inside of the packaging before the sealing is undone, so that after undoing, a cup shape is formed in which the openings of the aspiration ducts of the nozzle are immersed, thus allowing optimum use of the entire quantity of liquid contained in the packaging.

[0036] According to another preferred embodiment, the part of the packaging from which the hollow shaft departs is produced with strengthening ribs and/or with ribs for positioning the nozzle, these ribs being formed, for example by thermoforming, as recesses in the end wall and the wall and being orientated toward the hollow shaft.

[0037] According to a second embodiment, the withdrawal of the liquid is performed by puncturing the seal between the hollow shaft and the wall using means secured to the nozzle when a linear relative movement is imparted to the packaging relative to the nozzle, for example upward or vice versa, so as to place the inside of the capsule in communication both with the outside and with the aspiration chamber of the nozzle. In this embodiment, the seal needs to be made of a material that can be easily punctured and the hole situated at its center has to have a diameter corresponding more or less to the inside diameter of the hollow shaft so as to allow the nozzle to move. These puncturing means consist, for example, of at least two ducts having their ends bent over at 180°, one of them allowing the pumping of the liquid and the other serving to equalize the pressure within the capsule. Obviously, a larger number of sets of ducts may be used.

[0038] According to a variant of this second embodiment, preferably when the packaging has a small volume corresponding to that of a capsule, it is also possible to provide partitioning to make it possible successively to withdraw several doses of one and the same liquid or so as to mix instantly different liquids that can only be kept separately. In the latter case, a set of pressure-equalizing and aspiration ducts is associated with each compartment. The latter objective could also be achieved by using at least two capsules in sequence. In this case, each compartment preferably comprises sealing means able to collaborate independently for the purposes of opening and thus able to place compartments in communication with the aspiration and mixing subassembly.

[0039] As can be seen, the use of packagings according to the invention makes it possible to make the distribution of heated frothed and/or emulsified liquids more hygienic and more economical in that, on the one hand, there is no longer a dip tube and, on the other hand, the liquid remains isolated from the external surroundings at the time of withdrawal and can be held without the possibility of running into the compartment of the packaging between withdrawals.

[0040] Another subject of the invention is a method for producing and distributing a food preparation or the like hygienically, characterized in that it consists in using a disposable packaging comprising at least one food liquid contained in at least one compartment of the packaging. The method comprises the steps consisting, amongst other possibilities, in:

[0041] opening the packaging, opening having the effect of placing the compartment in more or less leaktight communication with a venturi-type means;

[0042] using a pressurized fluid and a vacuum effect to aspirate the liquid from the compartment into the venturi-type aspiration means, which is in communication with a heated pressurized fluid and possibly a gas;

[0043] mixing the food or other liquid with the heated pressurized-fluid and possibly the gas, so as to heat and possibly emulsify and/or froth the food preparation, and

[0044] dispensing the preparation thus heated and possibly emulsified.

[0045] The pressurized fluid causing the vacuum effect is generally steam or hot water. As far as the gas is concerned, it is generally air, but use could equally be made for example of an inert gas.

[0046] The opening of the packaging is preferably achieved through the action of the relative displacement of the venturi-type means with respect to the packaging, and more preferably still, by guided displacement in a housing of the packaging.

[0047] Such an opening configuration is particularly easy to use and there is no need to learn or gain any particular qualification in the use of the method.

[0048] In a first embodiment, the opening of the packaging containing the liquid is performed by breaking a sealed part of the packaging and by placing the compartment containing the liquid in communication by means of a venturi-type nozzle by at least one duct. In this case, as a preference, the venturi-type means is secured to the packaging in sealed

connection with the compartment so as ensure correct aspiration of the liquid and ensure that the liquid flows without leaks to the outside. Such an embodiment is perfectly hygienic and generates no loss of liquid that could dirty the close surroundings or lead to malfunctioning in the preparation.

[0049] The compartment may need to have its pressure equalized by placing the compartment in communication with an atmospheric pressure outlet using at least one pressure equalizing duct.

[0050] The pressurized fluid is preferably steam or hot water. The gas is preferably air but could be replaced with an inert gas, with a greater or lesser frothing effect.

[0051] In a second embodiment, the opening of the compartment is performed by puncturing the packaging and placing the compartment containing the food liquid in communication with the venturi-type means by at least one feed duct and one pressure equalizing duct.

[0052] In a preferred embodiment, the means of the venturi type forms an integral part of the packaging and is disposable with the packaging. Thus, such a configuration requires no cleaning of the aspiration device, the risks of blockage associated with the prolonged use of the nozzles are non-existent because a new aspiration means is available for each use and the maintenance operations are also minimal.

[0053] In another embodiment, the venturi-type means forms part of a nozzle designed to be connected to and delivered with the packaging. The nozzle may be either disposable or reusable, for example coming in a packaging containing a small number of capsules. The packaging is then more economical because it is more simple in its design.

[0054] Additional features and advantages are described herein, and will be apparent from, the following Detailed Description and the figures.

## BRIEF DESCRIPTION OF THE FIGURES

[0055] **FIG. 1** is an exploded perspective view of a first embodiment of a packaging according to the invention associated with an aspiration and mixing subassembly that can be fitted to a pipe of a steam generator;

[0056] **FIG. 2** is a side view of the packaging depicted in **FIG. 1**, the aspiration and mixing subassembly having been omitted;

[0057] **FIG. 3** is an enlarged diametral section of the packaging depicted in **FIG. 2**;

[0058] **FIG. 4** is a longitudinal section of the aspiration and mixing subassembly depicted in **FIG. 1**;

[0059] **FIG. 5** is a perspective view of the first embodiment of the packaging of the invention associated with an aspiration and mixing subassembly and illustrating an adapter for fitting to a pipe of a steam generator;

[0060] **FIG. 6** is a perspective view with partial cut away of the packaging depicted in **FIG. 5**, the packaging being shown in the closed position and the adapter for fitting to a pipe of a steam generator being mounted on the aspiration subassembly;

[0061] **FIG. 7** is a view similar to **FIG. 6** in which the packaging is shown in the open position;

[0062] **FIG. 8** is a view similar to **FIG. 5** illustrating a variant of adapter for fitting to a pipe of a steam generator;

[0063] **FIG. 9** is a perspective view with partial cut away of a packaging according to the invention associated with a variant embodiment of the aspiration and mixing subassembly, the packaging being shown in the closed position;

[0064] **FIG. 10** is a view similar to **FIG. 9** in which the packaging is shown in the open position;

[0065] **FIG. 11** schematically shows in perspective with partial cut away a second embodiment of a packaging according to the invention associated with another variant embodiment of the aspiration and mixing subassembly, the packaging being shown in the closed position;

[0066] **FIG. 12** is a view similar to **FIG. 11**, the packaging being shown in the open position;

[0067] **FIG. 13** is a view from underneath in perspective of a variant of the second embodiment of a packaging according to the invention;

[0068] **FIG. 14** is a perspective view of a third embodiment of a packaging according to the invention, viewed from underneath;

[0069] **FIG. 15** depicts the same packaging as the one in **FIG. 14**, viewed from the top;

[0070] **FIG. 16** shows detail of the packaging depicted in **FIG. 14**, and

[0071] **FIG. 17** schematically depicts a fourth embodiment of a packaging according to the invention.

## DETAILED DESCRIPTION

[0072] A first embodiment in which the packaging has a toric overall shape and a small capacity is described hereinafter with reference first of all to FIGS. **1** to **8**.

[0073] **FIG. 1** depicts, in exploded perspective, a packaging according to the invention comprising an aspiration and mixing subassembly comprising a venturi-effect nozzle denoted by the general reference **1**.

[0074] The nozzle **1** is associated with a packaging **2** having the shape of a capsule closed by a deformable seal **7** welded to a rim **28** of said capsule. The packaging **2** comprises a hollow shaft **9** extending from the end wall **11** as far as the seal **7** which is provided with an opening **8** corresponding to the interior contour of a hollow shaft **9**. The opening **8** in the seal **7** may be entirely uncovered or partially closed off by a grating to avoid splashing of the ejected preparation and improve its frothy nature. Typically, the capsule may be obtained in a single piece by thermoforming or injection molding a plastic. In the example illustrated, the packaging has a toric overall shape.

[0075] The hollow shaft **9** is designed to accommodate, at the end wall **11** end, the nozzle **1** and, at the seal **7** end, a joining element **13** assembled with the base **14** of the nozzle **1** to form fixing and opening means for the packaging **2**. In this first embodiment, the joining element **13** is fixed by screwing onto the nozzle **1**, but it could be fixed to the latter by any other method, such as clipping.

[0076] Before use, the liquid contained inside the capsule is therefore isolated from the external surroundings by the bonding or welding of an inner ring **17** to the base of the hollow shaft **9** and of an outer ring **28** to the outer rim of the capsule, as depicted in **FIG. 3**.

[0077] As can also be seen in **FIGS. 2 and 3**, in this first embodiment, the capsule **2** has ribs **6***a*, **6***b* extending from the hollow shaft **9** to the periphery. A first series of ribs **6***a* plays a part in reinforcing the capsule **2**, and possibly in partitioning it as will be seen later on. A second series of ribs **6***b* is designed to prevent the nozzle from rotating in the packaging, as will be explained with reference to **FIGS. 6 and 7**. It can also be seen that the capsule **2** comprises, on its outer wall **5***a*, a plurality of lugs **18** making it possible, according to one embodiment, to fix the packaging—capsule assembly onto a pressurized-fluid generator, as will be explained later on.

[0078] One type of nozzle that can be used with this first embodiment of the packaging is described briefly now with reference to **FIG. 4** and is described in greater detail in an application filed this very day by the applicant company and entitled "Device for pumping a liquid from a packaging or a container", which is incorporated hereinto by reference.

[0079] The nozzle **1** comprises a body **1***a* which is cylindrical overall except for fins **19** the purpose of which will be explained later. At its upper part, the nozzle comprises a steam inlet well **21** in which means of fitting to the pipe of a pressurized-fluid generator, for example the pipe of an expresso coffee machine, will be lodged. The steam inlet well **21** communicates with an aspiration chamber **25** via a very-small-diameter restriction **27** allowing the carrier fluid to pass at a sonic speed or, at the very least, a speed very close to the speed of sound. This restriction **27** is a reduction in cross section which thus generates a depression in the aspiration chamber **25** required for the desired venturi effect. Downstream of the aspiration chamber **25** there is a constriction **26** of larger diameter than the restriction **27** and that makes it possible to regulate the flow rate at which the aspirated liquid passes according to the speed. The aspiration chamber **25** is itself in communication with a mixing well **29** via the constriction **26**. Also opening into the aspiration chamber **25** are an air carrying canal **31** and a carrying or pumping canal **33** for the liquid contained inside the packaging **2**.

[0080] As is known, the final quality of the froth depends on numerous factors, particularly on the air flow rate that can be controlled with very precise calibration of the air carrying canal **31**. Knowing that the diameter of this canal is of the order of a few tenths of a millimeter, it will be understood that such calibration is a relatively tricky matter, especially since this nozzle is designed for mass production, for example by injection-molding a plastic such as polypropylene (PP), polystyrene or any other appropriate plastic materials. This is why it is preferable to provide, at the air intake, a larger-diameter orifice **32** allowing the fitting of means allowing better control over the air flow rate. These are, for example, a permeable membrane, for example a controlled-porosity membrane **32***a* which is fixed over the orifice **32**. A membrane of this type is available for example in the range of products offered by Atofina (Paris) under the trade name Pebax® or the company Gore (USA) under the trade name Goretex®. This membrane **32***a* may also, without modifying the body of the nozzle, make it possible to choose the porosity best suited to the pressure of a given steam generator. It will also be noted that the larger diameter of the orifice **32** allows it to be blocked off very easily if the nozzle is to be used, not for producing an emulsion, but simply for heating a liquid.

[0081] It can also be seen that the liquid carrying canal **33** is formed inside the body **1***a* of the nozzle **1**, feed orifices **34***a*, **34***b*, **34***c* (only **34***a* is visible in the section of **FIG. 4**) being situated, in the example illustrated, at the base **14** of the nozzle **1** and intended to be placed in communication with the inside of the packaging containing the liquid when the device is in the pumping configuration.

[0082] In the case of a nozzle designed to be fitted to a closed packaging, the vertical exterior part of the nozzle **1** further comprises a groove **35** allowing the pressure inside the capsule to be equalized when the liquid contained in the packaging is pumped out. The bottom part **36** of this groove **35** is therefore configured to be in communication with the inside of the packaging containing the liquid when the device is in the pumping configuration.

[0083] It can also be seen that the end of the mixing well **29** comprises an internal screw thread **30** allowing the joining element **13** to be attached.

[0084] This first embodiment of the packaging and its operation, when it is associated with the aforementioned nozzle **1**, are now described with reference also to FIGS. **5** to **7**. In **FIG. 5**, the capsule **1** is depicted ready for use before the fitting of the adapter means consisting in this case of a bayonet adapter **23** allowing the connecting sleeve **22** to be secured to the steam inlet well **21** in the nozzle. As can be seen more clearly in the cross section that is **FIG. 6**, a ring **15** of the seal **7** is trapped hermetically between the nozzle **1** and the joining element **13**, and the end wall of the hollow shaft **9** is welded hermetically to a ring **17** of the seal **7** surrounding the first ring **15**. In this position, the liquid contained in the packaging is completely isolated from the external surroundings, the liquid feed orifices **34***a*, **34***b*, **34***c* and the air inlet orifice **36** for equalizing the pressure all lying above the ring **17** hermetically welded to the seal **7**. In the preferred embodiment visible in **FIG. 6**, the length of the hollow shaft **9** is such that the seal **7** has a convex shape. It can also be seen that the fins allow the nozzle to be prevented from rotating relative to the capsule.

[0085] By displacing the capsule **2** axially relative to the nozzle **1**, as indicated by the arrow F in **FIG. 7**, downward or vice versa, the ring **17** is undone, the seal **7** then adopting a concave shape. The feed orifices **34***a*, **34***b*, **34***c* are therefore placed in communication with the liquid contained in the capsule **2**, and the bottom part **36** of the groove **35** allowing air to be brought in from outside to equalize the pressure within the capsule. In this position, the air from outside can also flow through the canal **31** opening into the aspiration chamber **25**.

[0086] The fixing and opening means are also preferably configured in such a way as to place the aspiration canal in communication with the liquid contained in the packaging without the possibility of flow to the outside. The expression "without the possibility of flow to the outside" is to be understood as meaning that the liquid contained in the packaging is not likely to flow or spill out of the packaging

without a forced aspiration effect of the by the venturi-effect aspiration subassembly. For example, the fixing and opening means collaborate with the packaging to place the canal in communication near to the bottom of the liquid. A differential hydrostatic pressure is thus created and this keeps the liquid in the packaging without the risk of possible flow, as is the case in bird water bottle devices where the water level in the reserve is above the feed bucket without leaks occurring nonetheless.

[0087] In **FIG. 8**, the nozzle-capsule assembly has all the characteristics described earlier, but the bayonet adapter **23** has a U-shape which envelops the capsule **5** to collaborate with the lugs **16** distributed around the periphery of the capsule. As before, the sleeve **22** allows the pressurized-fluid inlet well **21** of the nozzle to be connected to the pipe of a generator of said pressurized fluid.

[0088] **FIGS. 9 and 10** depict, in perspective, with partial cut away, in the closed position and in the open position, a variant embodiment in which the aspiration and mixing subassembly is formed at the time of opening. Indeed, as can be seen in **FIG. 9**, the canal **27** restricting the flow of the pressurized carrier fluid is formed in the end of the sleeve **22** of the adapter **23** (not depicted). In the opening position depicted in **FIG. 10**, the frustaconical end of the sleeve **22** presses hermetically against a bowl **28**, to form the aspiration chamber **25**. The means of closing and opening the capsule using the rings **15** and **17** of the seal **7** are the same as those described previously.

[0089] **FIGS. 11 and 12** correspond to a second embodiment which differs from the first essentially in the way in which the liquid is withdrawn from inside the capsule **3**, of the same type as the one described earlier but depicted in this example without reinforcing or guide ribs. The seal **7** is welded only via a ring **17** to the base of the hollow shaft **9** and the venturi-effect device used is the same as the one described in **FIGS. 9 and 10**, except for the liquid withdrawal means. Specifically, the carrying or pumping canal **33** is extended beyond the base of the nozzle by a nose **37** bent over at a 180° so that its pointed end **37***a* faces the seal **7**. The pressure equalizing canal (not depicted) has a similar configuration. When a translational movement represented by the arrow F in **FIG. 12** is imparted to the capsule, the end **37***a* punctures the seal **7** and allows the liquid to be aspirated as explained earlier.

[0090] The nozzle **1** may comprise several bent-over noses **37** and several liquid carrying canals **33**, for example three or six, and this may contribute to improving the quality of the emulsion or of the frothy preparation and exhibit another advantage explained hereinafter.

[0091] **FIG. 13** depicts, in a view from underneath without the seal **7**, a capsule **3** comprising reinforcing ribs **6***a* some of which are extended to form partitions **16** the base **16***a* of which will be welded to the seal **7** in the same way as the ring **17** is welded to the edge of the hollow shaft **9**. Thus, it is possible to divide the liquid contained in the capsule into several doses that can be withdrawn successively using the same nose **37**. The compartments formed by the partitions may also contain different liquids that have to be kept separately and mixed only at the time of use using a nozzle comprising as many noses **37** as there are compartments.

[0092] FIGS. **14** to **16** show an example of a third embodiment in which the capacity of the packaging, denoted by the general reference **4**, is much greater, for example a few deciliters or even as much as a liter, such a packaging being more specifically intended for industrial catering. Such a packaging, which typically has the shape of a carton comprising a wall **41**, an end wall **43** and an upper closure element **45**, has, in the continuation of its upper closure element **45**, a small-volume reserve **40** in communication with the inside of the packaging. This reserve **40** has all the characteristics of the capsules described previously, namely a side wall **42** meeting the wall **41**, an end wall **44** parallel to the end wall **43** and an upper closure element **46** in the continuation of the element **45**. This reserve **40** has, passing through it, a hollow shaft **9** surrounded by a seal **7** that can be punctured or at least partially detached from the base of the hollow shaft depending on type top of nozzle used.

[0093] As depicted in a transparent view in **FIG. 16**, the hollow shaft **9**, the welded region **47** of the seal **7** and a perforated joining element **48** may be produced by thermoforming to constitute an insert that can be fitted to a packaging produced elsewhere, for example made completely out of cardboard. It will also be seen that the wall **42** is depicted with a polygonal outline, but that it may have any shape.

[0094] **FIG. 17** schematically depicts a fourth embodiment, denoted by the general reference **5**, in which the body of the packaging is made of a flexible material. More specifically, the packaging comprises a flexible sachet comprising a reservoir **50** containing the liquid and an aspiration and mixing subassembly **51** connected to the reservoir **50** by means of an aspiration duct **33**. The subassembly comprises means equivalent to those of the embodiment previously described, namely a means **21** for introducing a pressurized fluid, a restriction zone **27** for accelerating the pressurized fluid, a flow canal for the mixture or emulsion **48**, possibly an air intake **31** allowing a certain amount of air to be introduced into the mixing or emulsifying chamber. The packaging may be made up of one or several welded flexible films forming weld regions **53**, **55**, which are removed by cutting, delamination or tearing along lines of weakness **54**, **56**. The packaging is thus completely sealed until the time that the welded regions **53**, **55** are opened. Opening provides access to the fluid introduction means **21** which may, for example, be an adapter allowing an injection needle or the like to be introduced. Opening also causes the drink flow duct **48** to be uncovered. It must also be understood that the packaging of the embodiment of **FIG. 17** may be envisaged by means of rigid non-deformable or not very deformable elements forming the walls of the compartment and of the venturi-type aspiration subassembly.

[0095] It should be understood that various changes and modifications to the presently preferred embodiments described herein will be apparent to those skilled in the art. Such changes and modifications can be made without departing from the spirit and scope of the present subject matter and without diminishing its intended advantages. It is therefore intended that such changes and modifications be covered by the appended claims.

**1**. A disposable packaging for dispensing at least one preparation from at least one pumpable liquid comprising at least one closed compartment containing the pumpable liquid, characterized in that the packaging comprises means

for accepting an aspiration and mixing subassembly of the venturi type and means of sealing the packaging.

**2**. The packaging as claimed in claim 1, characterized in that the means for accepting the aspiration and mixing subassembly comprise a passage acting as a housing for said subassembly and in that the sealing means are intended to collaborate in terms of opening with the aspiration and mixing subassembly in said passage so as to place the compartment in communication with the aspiration and mixing subassembly, and an opening for ejecting said preparation.

**3**. The packaging as claimed in claim 2, characterized in that the aspiration and mixing subassembly is secured to the housing and able to move between a closed position in which the aspiration and mixing subassembly is disengaged from the sealing means and an opening position in which the aspiration and mixing subassembly engages the sealing means for the purposes of opening.

**4**. The packaging as claimed in claim 2, characterized in that the opening through the seal is closed off by a grating.

**5**. The packaging as claimed in claim 2 or 3, characterized in that it comprises a body comprising a hollow shaft forming the housing for the aspiration and mixing subassembly, in that the body delimits at least said compartment and in that the sealing means comprise a seal welded to said body in order to close off at least said compartment.

**6**. The packaging as claimed in claim 5, characterized in that the sealing means comprise a seal sealing ring which is welded to one edge of the hollow shaft, which ring is forced undone by a relative displacement of the aspiration and mixing subassembly within the hollow shaft.

**7**. The packaging as claimed in claim 5 or 6, having a capacity of the order of a few milliliters to a few tens of milliliters, characterized in that it has the shape of a circular capsule with the hollow shaft at its center and in that the seal forms the upper closure element of said capsule.

**8**. The packaging as claimed in claim 5 or 6, having a capacity of the order of a few deciliters, characterized in that the seal is arranged above a small-volume reserve in communication with the inside of the packaging, said reserve being formed laterally by an extension of the upper closure element, by a side wall and by an end wall parallel to the end wall of said packaging.

**9**. The packaging as claimed in claim 5 or 6, characterized in that the seal comprises a hole of a diameter smaller than the inside diameter of the hollow shaft so as to form a ring that can be welded or trapped at the end of the aspiration and mixing subassembly so as to allow the seal to be partially or completely undone from the hollow shaft during the relative translational movement of the aspiration subassembly within the housing so as to place the food liquid in communication with at least one duct opening into the aspiration subassembly to allow the pumpable liquid to be aspirated, and a duct opening above the end wall of the capsule to equalize the pressure within the capsule.

**10**. The packaging as claimed in claim 9, characterized in that the seal is domed toward the inside of the packaging before the sealing is undone, so that after undoing, the seal forms a cup-shape in which the openings of the equalizing ducts and aspiration ducts of the nozzle are immersed.

**11**. The packaging as claimed in any one of claims 3 to 6, characterized in that the seal comprises a hole of a diameter that more or less corresponds to the inside diameter of the hollow shaft, and in that the seal is made of a material that can be punctured by the aspiration and mixing subassembly opening means during the relative translational movement of the aspiration and mixing subassembly within the hollow shaft.

**12**. The packaging as claimed in claim 11, characterized in that the means for puncturing the seal are formed of at least two ducts the ends of which are bent over at 180° in order to puncture the seal, one of the ducts opening above the end wall of said packaging so as to equalize the pressure inside, the other opening into the aspiration and mixing subassembly to allow the liquid to be aspirated.

**13**. The packaging as claimed in any one of the preceding claims, characterized in that the internal volume of the capsule is divided by partitions making it possible to form at least two compartments each one containing a dose of liquid, each compartment comprising sealing means able to collaborate independently for the purposes of opening so as thus to be able to place the compartments in communication with the aspiration and mixing subassembly.

**14**. The packaging as claimed in claim 13, characterized in that the interior volume of the capsule is divided by partitions making it possible to form at least two compartments each containing different food liquids intended to be mixed by means of at least two sets of pressure-equalizing and aspiration ducts.

**15**. The packaging as claimed in any one of claims 4 to 14, characterized in that the body of the packaging additionally comprises reinforcing ribs and/or ribs for positioning the aspiration and mixing subassembly; these ribs being formed as recesses in the end wall and in the wall, and orientated toward the hollow shaft.

**16**. The packaging as claimed in claim 15, characterized in that some ribs also form partitions having their top part welded to the seal.

**17**. The packaging as claimed in any one of claims 4 to 16, characterized in that the body of the capsule comprises lugs making it easier to handle when fitting to the pipe of a pressurized-fluid generator or to an accessory secured thereto.

**18**. The packaging as claimed in any one of the preceding claims, characterized in that the aspiration and mixing subassembly comprises at least one liquid aspiration duct, at least one gas carrying duct, at least one pressurized-fluid inlet, at least one aspiration chamber in which the ducts communicate and at least one outlet for dispensing the preparation.

**19**. The packaging as claimed in claim 1, characterized in that the means for accepting the aspiration and mixing subassembly are configured in such a way as to accommodate said subassembly permanently without relative displacement; said subassembly being in communication with the compartment and the sealing means being arranged in such a way as to isolate both said compartment and the subassembly from the external surroundings.

**20**. A disposable packaging for dispensing at least one food liquid, said packaging being formed of a side wall, of an end wall and of a closure element comprising a welded seal, characterized in that it comprises a passage designed to accommodate withdrawing means, said seal being able to be undone in a determined region so as to place the inside of the packaging in communication with said withdrawing means when said withdrawing means are introduced into said passage without the withdrawing means entering the packaging.

**21**. A method for producing and dispensing a preparation hygienically, characterized in that it consists in using a disposable packaging comprising at least one pumpable liquid contained in at least one compartment of the packaging and comprises the steps consisting, amongst other possibilities, in:

opening the packaging, opening having the effect of placing the compartment in more or less leaktight communication with a venturi-type means;

using a pressurized fluid and a vacuum effect to aspirate the liquid from the compartment into the venturi-type means, which is in communication with a heated pressurized fluid and possibly a gas;

mixing liquid with the heated pressurized-fluid and possibly the gas, so as to heat and possibly emulsify or froth the liquid in order to form the preparation, and

dispensing the preparation thus obtained, heated and possibly emulsified.

**22**. The method as claimed in claim 21, characterized in that the opening of the packaging is performed through the action of the relative displacement of the venturi-type means with respect to the packaging.

**23**. The method as claimed in claim 22, characterized in that the opening of the compartment is performed by puncturing the packaging and placing the compartment containing the liquid in communication by the venturi-type means by at least one duct.

**24**. The method as claimed in claim 22, characterized in that the opening of the compartment is performed by breaking a sealed part of the packaging and placing the compartment containing the liquid in communication by the venturi-type means by at least one duct.

**25**. The method as claimed in claim 21, characterized in that during aspiration, the pressure in the compartment is equalized by placing the compartment in communication with an atmospheric-pressure outlet using at least one pressure equalizing duct.

**26**. The method as claimed in claim 21, characterized in that the pressurized fluid is steam or hot water.

**27**. The method as claimed in claim 21, characterized in that the gas is air.

**28**. The method as claimed in claim 21, characterized in that the venturi-type means forms an integral part of the packaging and is disposable with the packaging.

**29**. The method as claimed in claim 21, characterized in that the venturi-type means forms part of a nozzle designed to be connected to the packaging.

* * * * *