US 20130099597A1

(19) United States

(12) Patent Application Publication

Perentes et al.

(10) Pub. No.: US 2013/0099597 A1

(43) Pub. Date: Apr. 25, 2013

(54) **CAPSULE SENSING SYSTEM**

(75) Inventors: **Alexandre Perentes**, Lausanne (CH); **Alfred Yoakim**, St-Legier-la Chiesaz (CH); **Youcef Ait Bouziad**, Saint-Sulpice (CH)

(73) Assignee: **NESTEC S.A.**, Vevey (CH)

(21) Appl. No.: **13/806,288**

(22) PCT Filed: **Jun. 23, 2011**

(86) PCT No.: **PCT/EP2011/060544**

§ 371 (c)(1), (2), (4) Date: **Dec. 21, 2012**

(30) **Foreign Application Priority Data**

Jun. 28, 2010 (EP) 10167463.8

Publication Classification

(51) **Int. Cl.**

A47J 31/44 (2006.01)

H01H 35/00 (2006.01)

(52) **U.S. Cl.**

CPC ***A47J 31/44*** (2013.01); ***H01H 35/00*** (2013.01)

USPC **307/116**; 99/285

(57) **ABSTRACT**

A brewing unit (**1**) of a beverage preparation machine has: a seat (**11**) for receiving a capsule (**2**) comprising an electrically conductive material (**21**, **22**, **23**, **24**); and a capsule sensing electric circuit with first and second electric connectors (A, B). The first electric connector (A) and the second electric connector (B) are electrically connected through the electrically conductive material of the capsule (**2**) when the capsule is present in the seat (**11**) and electrically disconnected when the capsule is not in the seat so as to close and interrupt, respectively, the capsule sensing electric circuit (A, Aa, a, B, Bb, b, abc).

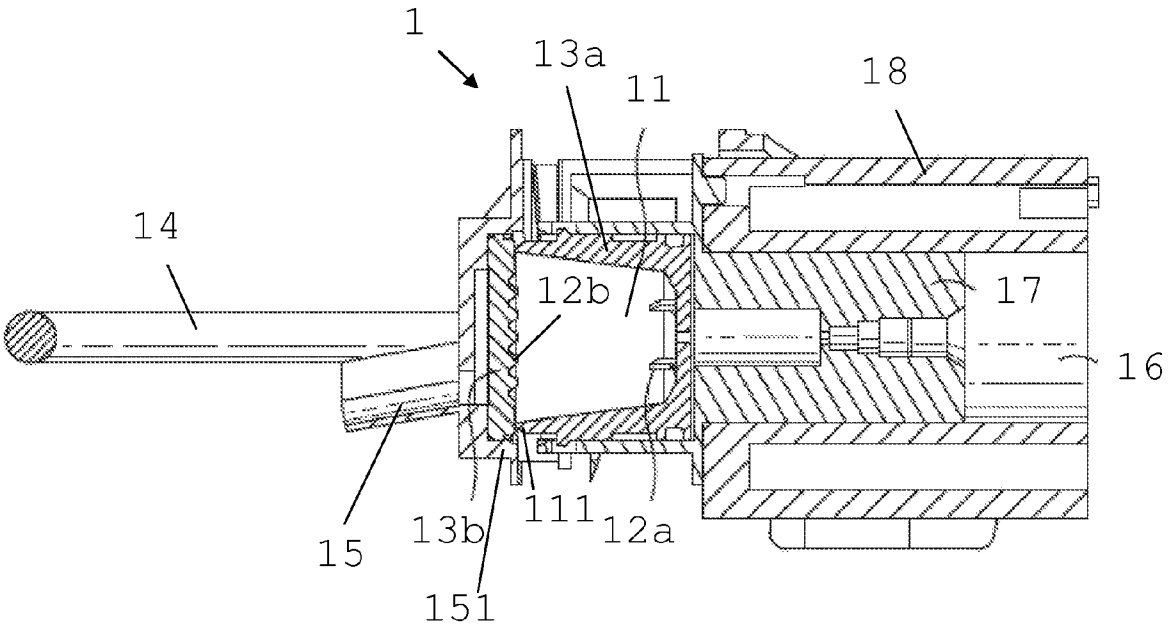

Fig. 1

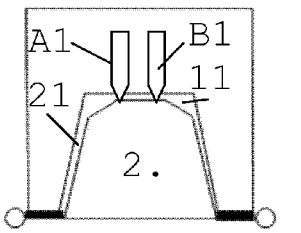

Fig. 2

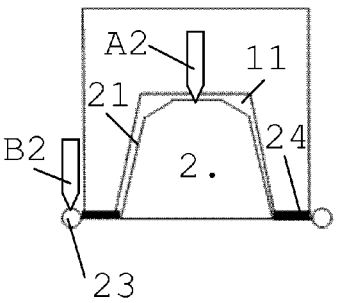

Fig. 3

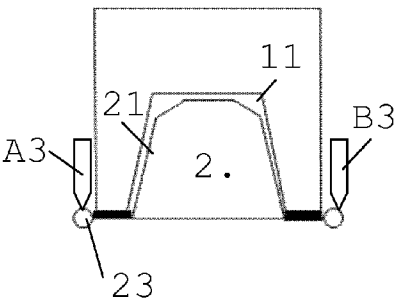

Fig. 4

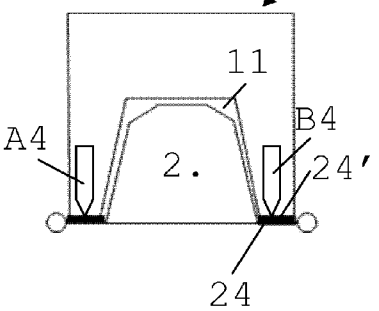

Fig. 5

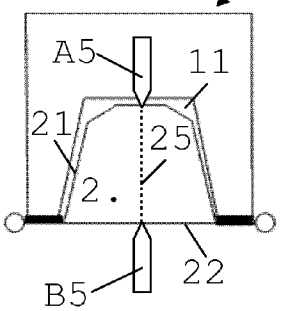

Fig. 6

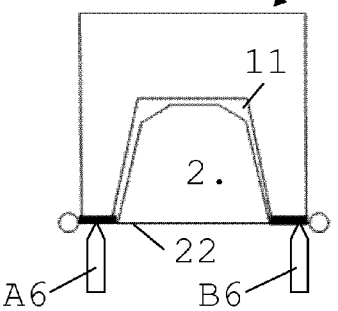

Fig. 7

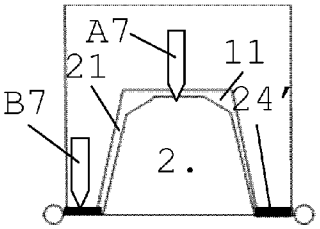

Fig. 8

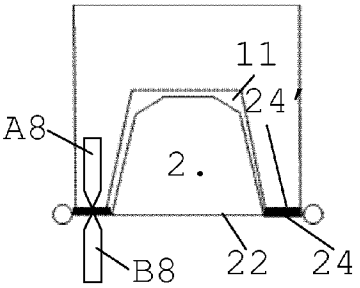

Fig. 9

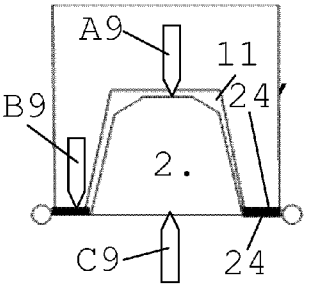

Fig. 10

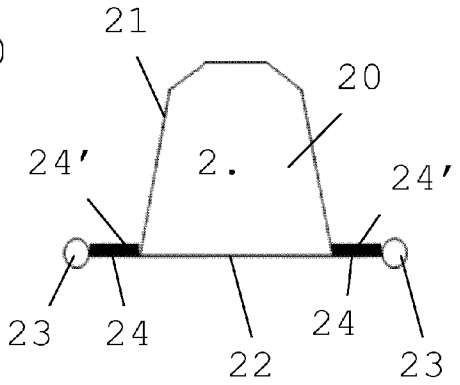

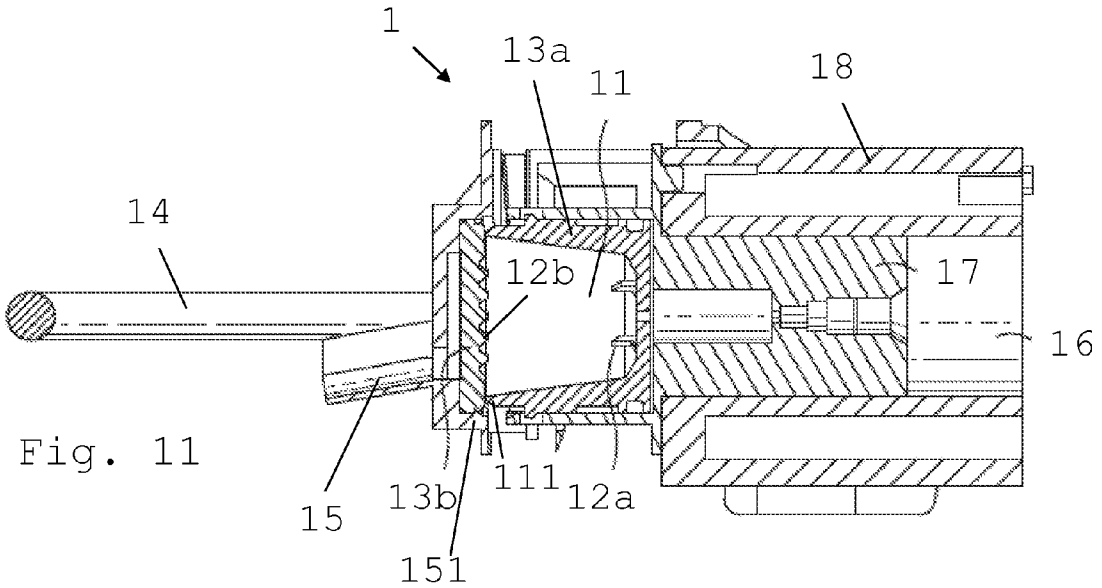

Fig. 11

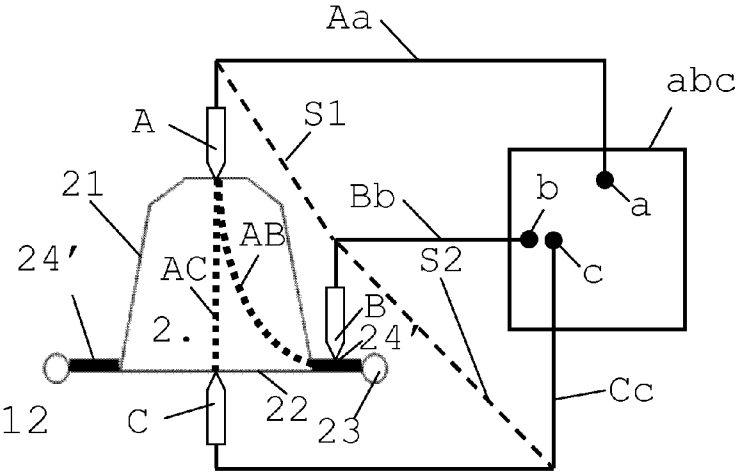

Fig. 12

CAPSULE SENSING SYSTEM

FIELD OF THE INVENTION

[0001] The field of the invention relates to a sensing system for a capsule within in a beverage preparation machine.

[0002] For the purpose of the present description, a "beverage" is meant to include any human-consumable liquid substance, such as tea, coffee, hot or cold chocolate, milk, soup, baby food, etc. A "capsule" is meant to designated a packaging for enclosing any pre-portioned beverage ingredient. Unless specified, the packaging is of any material and any structure, in particular an airtight packaging, e.g. plastic, aluminium, recyclable and/or biodegradable packagings, and of any shape and structure, including soft pods or rigid cartridges containing the ingredient.

BACKGROUND ART

[0003] Electrically powered systems for preparing beverages, in particular hot beverages such as tea or coffee, including such beverages that are prepared using portioned ingredients for instance contained in capsules or pods, have been developed and have become very popular, for use at home as well as out of home.

[0004] The numerous advantages of such systems have been widely recognized, in particular, their convenience of use, clean operations and better controlled quality of the brewed beverage delivered.

[0005] It is known to associate a radio frequency (RF) identifier to the capsule for the purpose of recognizing the capsule which is inserted in the device such as by a reader. Such identification allows changing particular operations, in the beverage producing device, in response to the detection of the identifier. For instance, brewing operations can be modified accordingly for adapting them to the type of capsule detected. For instance, brewing parameters, such as water temperature, the beverage volume or others, can be changed.

[0006] FR 2 912 124 relates to a portioned package for preparation of a beverage comprising two flexible walls connected by their seam and comprising an RFID tag for contactless reading which is positioned in a reinforced peripheral portion at the seam of the package. EP 1 890 271 relates to a method of controlling the dispensing of an infusion product with a container for a product dose and an RFID tag associated to a respective number of containers. GB 2 397 510 relates to a cartridge and machine for the preparation of beverage wherein each cartridge carries a code comprising a plurality of data bits which barcode is read by a beverage preparation machine upon insertion of the cartridge in the machine.

[0007] WO 2005/044067 relates to an apparatus enabling the traceability of the content of a receptacle and its origin wherein the receptacle comprises an optical or magnetic code containing information as to the content or origin of the receptacle which are read by an external reader, e.g., comprising a magnetic head. The code can be a metallic wire or ribbon containing recorded information in magnetic format.

[0008] Other systems has been developed which involve the use of optical recognition, e.g. of bar codes or other visual identifiers on capsules, as for example disclosed in WO02/28241 and GB 2 397 510.

[0009] Such prior art capsule recognition systems involve the use of complicated and/or expensive emitters and sensors. These sensing systems, particularly involving optical recognition, are likely to be exposed to interferences (insufficiently clean environment) and/or mis-positioning affecting the reliability of the sensing. Such delicate sensing devices are located in harsh environments, such as brewing unit, and thus exposed to high temperature and pressure likely to cause premature failure of such devices.

[0010] There is therefore still a need to simplify and/or reduce the costs involved with the sensing of capsules used in beverage preparation machines while providing a reliable sensing system.

SUMMARY OF THE INVENTION

[0011] The invention relates to a brewing unit of a machine for preparing a beverage. The brewing unit has: a seat for holding a capsule in a beverage preparation configuration, the capsule comprising an electrically conductive material; and a capsule sensing electric circuit with first and second electric connectors.

[0012] For instance, the brewing unit is configured for a machine for preparing coffee, tea, chocolate or soup. In particular, the machine is arranged for preparing within a beverage module a beverage by passing hot or cold water or another liquid through the capsule held by the brewing unit. The capsule typically forms a packaging that delimits an inner cavity for containing an ingredient of the beverage to be prepared, such as ground coffee or tea or chocolate or cacao or milk powder. Hence, an ingredient used for the beverage preparation can be introduced into the machine in a pre-portioned form with the aid of a capsule, i.e. a packaging for holding and containing the ingredient.

[0013] In accordance with the invention, the first electric connector and the second electric connector are:

[0014] electrically connected through the electrically conductive material of the capsule when the capsule is present in the seat; and

[0015] electrically disconnected when no such capsule is in the seat and/or when the seat is in a configuration for receiving and/or evacuating a capsule, so as to close and interrupt, respectively, the capsule sensing electric circuit.

[0016] Hence, by monitoring the electric behaviour of this electric circuit, the electric relationship between the first and circuit's electric conductors may be analysed and the characteristics of the electric path between the connectors analysed. When a conductive capsule bearing such an electric path is present in the seat of the brewing unit the electric characteristics of the circuit are different to circuit's electric characteristics when the capsule is absent.

[0017] It follows that invention provides an inexpensive and reliable and robust sensing system in a brewing unit for beverage preparation machines using capsules and whose electric contacts for sensing a capsule are simple to implement in the brewing unit configurations known in the art.

[0018] The sensing system of the invention is in particular nearly unaffected by the cleanness of the environment, in particular when the electric contacts are located in an area that is not at all exposed to liquids in particular to beverage prepared by the brewing unit. Moreover, unlike optical recognition, the sensing system is generally not affected by any orientation of the capsule or deformation thereof or light interferences in so far as the orientation of the capsule is predetermined by the configuration of the capsule seat. An capsule type based discrimination of the capsules is easily achieved in an inexpensive and reliable manner by providing type dependant electric characteristics, such as type depen-

dant resistivity, of the capsule that can be measured by the capsule sensing electric circuit.

[0019] This simple capsule sensing system may be used for instance in an automatic capsule recognition and machine parameterisation process. For instance, the machine may be pre-programmed for carrying out different beverage preparation processes depending on the type of capsules used, e.g. a capsule containing ground coffee for preparing an espresso that can be differentiated by the system from a capsule containing ground coffee for preparing a regular or lungo coffee. Hence, the quantity of water and/or heating and/or pumping pressure may be controlled automatically based on the sensing system. In order for the machine to discriminate automatically between the capsules, the capsules of one type have electrical properties that are different from the electrical properties of another type and such differences of properties can be sensed by the circuit.

[0020] The simple capsule sensing system can be used for capsule detection, namely for detecting the presence or the absence of a capsule in the seat of the brewing unit, for instance to control the status of the machine, in particular its energy consumption as appropriate. Hence, when the machine detects no capsule in the seat, a thermal conditioner such as a heater in particular an accumulation heater e.g. a thermoblock, may be shut down or run down to an lower energy consumption level to save energy. Likewise, an energy-consuming user-interface, e.g. a user-signalling LED, an interface screen, a touch screen and/or a illuminated button may be shut-off in the absence of a capsule in the seat. The absence of an ingredient capsule in the seat may also be used to authorise a service mode, e.g. for cleaning and/or descaling the machine, etc.

[0021] It follows that the capsule sensing arrangement can be used to increase the user convenience by automatically recognising the type of capsule used in the brewing unit and automatically carry out type-dedicated operations. Moreover, the sensing arrangement may be used to reduce the energy consumption and lower the carbon footprint of a beverage preparation machine during its lifetime.

[0022] A first level of recognition may be linked to a pre-programmed beverage preparation process adjusted to the capsule type, e.g. a capsule for preparing an espresso or a lungo or a regular coffee. A second level of recognition may be linked to the identification of the content of the capsule, e.g. a particular coffee blend, and will allow the machine to communicate to the user information about the particular ingredient content e.g. via an interface screen, such as information as to the composition and origin and context of the ingredient content.

[0023] For instance, the electric circuit comprises a module for:

[0024] detecting a presence of the capsule in the seat by sensing a voltage and/or a current circulating between the first and second electric connectors; and/or

[0025] recognising a capsule type from a plurality of different types of capsules by measuring a type-dependant electric characteristic, such as an impedance, of the capsule when present in the seat and electrically connected to the first and second electric connectors.

[0026] This module may include a processor or like controller and a sensor connected thereto for sensing a characteristic of the electric circuit when powered. For instance, the sensor may include an ammeter for sensing whether or not current may pass between the first and second connectors whereby the presence and/or the resistivity of a capsule in the seat may be derived. Likewise, the sensor may include a voltmeter for sensing the magnitude of a voltage drop between the first and second connectors. It is also possible to analyse the capacitive or inductive properties of a capsule in the seat by passing a non-constant, e.g. a sinusoidal electrical power component, in the circuit. Hence, the impedance or other electric characteristic, e.g. involving the use of non-linear or active electric components in the capsule, may be used to detect the presence of a capsule in the seat and/or to identify a capsule type selected from a plurality of types.

[0027] In one embodiment, the electric circuit comprises a third electric connector which is electrically connectable to the first electric connector through an electric path in the electrically conductive material of the capsule that is different to an electric path in the electrically conductive material connecting the first and second electric connectors. The use of further electric connectors is also contemplated. The different connectors may be associated with different electric paths in the capsule having dedicated sensing functions, in particular for: identifying the presence or absence of the capsule; the type of capsule; a sub-type of a capsule or an indication about its age, e.g. to check whether the capsule is still safe for consumption.

[0028] At least one of the electric connectors can be arranged to contact, particularly non-intrusively, a capsule surface made of the electrically conductive material of the capsule when present in the seat and to circulate an electric current therethrough. Hence, this surface of the capsule should be electrically non-insulated. The capsule may be made of electrically conductive material or may bear a conductive surface layer, e.g. a conductive paint.

[0029] At least one of the electric connectors can be arranged to pierce a capsule surface, in particular a non-conductive surface, to come into contact with the electrically conductive material of the capsule underneath its surface, when the capsule is present in the seat, and to circulate an electric current through the capsule's conductive material. In this case, the capsule may or may not be covered with an electrically insulating material, e.g. an insulating paint.

[0030] The brewing unit may have a first enclosing part and a second enclosing part delimiting a capsule chamber that forms the seat. In particular, the enclosing parts are movable apart for inserting the capsule into the seat and/or removing the capsule from the seat and are movable together to hold the capsule in the seat for beverage preparation from the capsule. Examples of brewing units with such first and second enclosing parts can be found in EP 1 646 305, EP 1 859 713, EP 1 859 714 and WO 2009/043630.

[0031] The first and/or the second enclosing part(s) may form and/or bear one or more of the circuit's electric connectors.

[0032] The first and second enclosing parts can be configured to be movable together so as to squeeze therebetween an electrically conductive portion, such as a tongue or peripheral flange, e.g. a rim, of the capsule when said capsule is present in the seat. At least one of the electric connectors may be mounted in and/or adjacent one of the enclosing parts adjacent the squeezed portion, e.g. adjacent a portion extending outside the seat.

[0033] First and second electric connectors can be arranged to:

[0034] electrically contact each other in the absence of any capsule in the seat that is in a capsule extraction configu-

ration, e.g. when the above enclosing parts are moved together in the absence of any capsule in the seat; and

[0035] be out of electrical contact when the seat is in a capsule receiving and/or evacuation configuration, e.g. when the above enclosing parts are spaced apart.

[0036] Hence, in addition to detecting the presence and absence of a capsule in the seat, it is also possible to detect whether the seat is in an open configuration for receiving and/or evacuating a capsule or in a closed configuration for circulating liquid through the seat. In the former configuration, circulation of liquid through the seat (e.g. by operating a pump) may be prevented. In the latter configuration, liquid circulation may be allowed either for servicing purposes (in particular when no capsule is in the closed seat) or for preparing a beverage (in particular when a capsule is detected in the closed seat).

[0037] In one embodiment, the seat comprises a capsule piercer, such as at least one piercing element selected from a pin, needle, cone, pyramid and blade or a surface forming a series of such piercing elements e.g. a pyramid plate. Such a piercer is typically used to open the capsule for the introduction of liquid therein, e.g. water, or the removal of liquid therefrom, e.g. the beverage. Examples of such capsule piercers can be found in EP 512 470, EP 1 299 022 and EP 1 339 305.

[0038] The capsule piercer may form one of the electric connectors which is arranged to be in contact with an electrically conductive portion of the capsule, when present in the seat and in particular when pierced by the piercer, and to circulate an electric current therethrough.

[0039] When a capsule piercer is used as a connector, the outer surface of the capsule adjacent to the piercer does not need to be electrically conductive but may be covered with an insulating layer such as a colour paint. Electrical conduct is thus achieved by penetration of the piercer through the insulating surface into the conductive material underneath.

[0040] The invention also relates to a method of operating the above described brewing unit. The method includes the powering of the electric circuit and the measuring of at least one electric characteristic, such as a circulating current and/or a voltage drop between the first and second electric connectors (A,B). From this measuring, the following may be deriving:

[0041] a presence or an absence in the seat of a capsule that comprises an electrically conductive material connected to and inter-connecting the connectors by forming therebetween an electrically conducting path; and

[0042] a capsule type selected from a plurality of different types of capsules comprising an electrically conductive material having a type-dependant electric characteristic, such as an impedance, measurable by the electric circuit when a capsule of one of such types is present in the seat.

[0043] Another aspect of the invention relates to a use of a capsule having an electrically conductive material for connecting electrically the electric connectors of a brewing unit as described above, when this capsule is held in the seat. For instance the seat forms a housing arranged for housing the capsule.

[0044] The electrically conductive material may be metallic, e.g. containing aluminium, copper, iron, etc. . . . or may be a conductive ceramic or organic material, e.g. a conductive paint or plastic material.

[0045] The capsule can be made of a structure consisting predominantly of the electrically conductive material, in particular wherein at least 60 wt %, such as at least 75 wt %, optionally at least 95 wt % of the capsule. For instance, the capsule is made of a metallic packaging, e.g. an aluminium-based packaging, with or without an insulating outer layer for protecting the structure and/or for visual recognition reasons.

[0046] The invention also relates to a capsule for a brewing unit as described above. The capsule has: a non-conductive structure; and a track made of the electrically conductive material supported by the structure for electrically connecting the first and second electric connectors.

[0047] Another aspect of the invention relates to a set of capsules for a brewing unit as described above. The capsules comprise an electrically conductive material and differ from each other by at least one electric characteristic, such as the impedance, of the electrically conductive material of each capsule. Hence, the capsules may be sensed by the electric circuit, for example to distinguish the capsules and/or to detect whether or not a capsule is present in the brewing unit.

[0048] A further aspect of the invention relates to method of deactivating an electric circuit of a brewing unit as described above. The method comprises electrically connecting the electric connectors with a by-pass. The by-pass may be integrated in the electric circuit, physically and/or by programming a control unit of the circuit thereof. Hence, the same brewing unit may be used in machines which are arranged to be operated with capsules that can be sensed by the circuit and in machines which are not intended to provide such a feature. The presence of a capsule in the seat may thus be simulated by the by-pass so that the brewing machine may operate whether or not a capsule is used that is designed for being sensed by the electric circuit.

[0049] Yet a further aspect of the invention relates to the use of an electrically conductive conductor as a by-pass for the above method. The conductor is for instance arranged to extend along a peripheral part of the seat so as to leave sufficient room in the seat for inserting a separate capsule. Hence, such a separate capsule does not require to interconnect the electric connectors to allow proper operation of the brewing unit.

[0050] A low electric power can be sufficient to sense capsule in the seat. For instance, a voltage drop between the electric connectors of 0.1 to 12 volt can be provided, in particular 1 to 10 volt such as 2.5 to 7.5 volt. The current circulating between the electric connectors in the capsule can be of the order of 0.01 to 50 mA, in particular from 0.1 to 5 mA such as 0.3 to 1 mA. However, it is also possible to use higher voltage and/or amperage. The power for sensing the capsule may be an AC or a DC power.

BRIEF DESCRIPTION OF THE DRAWINGS

[0051] The invention will now be described with reference to the schematic drawings, wherein:

[0052] FIGS. **1** to **9** schematically illustrate different configurations of electric connectors associated with a capsule seat of a brewing unit according to the invention;

[0053] FIG. **10** illustrates a capsule suitable for such a brewing unit;

[0054] FIG. **11** shows a cross-section of a structure of such a brewing unit; and

[0055] FIG. **12** schematically illustrates a capsule detecting electric circuit of such a brewing unit.

DETAILED DESCRIPTION

[0056] One aspect of the invention relates to a brewing unit of a beverage preparation machine. The brewing unit is configured to operate with capsules containing an ingredient of the beverage to be prepared, e.g. ground coffee or tea or chocolate. A suitable capsule **2** is illustrated in FIG. **10**, the structure of a brewing unit **1** suitable for implementing the present invention is illustrated in FIG. **11** and an electric circuit A,Aa,a,B, Bb,b,abc is illustrated in FIG. **12**. Various embodiments of electric connections between capsule **2** and electric circuit A,Aa,a,B,Bb,b,abc are illustrated in FIGS. **1** to **9**.

[0057] In a particular embodiment of the invention, capsule **2** has a generally cup-shaped body **21** and a covering membrane **22**. Membrane **22** is assembled to cup **21** along a peripheral rim **24** of cup **21**. Rim **24** may be covered with a seal **24'**, e.g. made of elastomeric material, as will be explained below. Furthermore, capsule **2** in particular rim **24** and/or membrane **22** may bear a ring or toroid **23**, e.g. for assisting manufacturing and/or handling of capsule **2**. Such capsule **2** forms a packaging for containing an ingredient **20**, e.g. ground coffee, of a beverage to be prepared with the beverage preparation machine containing brewing unit **1**.

[0058] In an embodiment, capsule **2** forms a gastight packaging, e.g. made of aluminium or an aluminium-alloy. Alternatively, the capsule may be more or less pervious, e.g. perforated and/or made of organic, in particular plastic material, e.g. biodegradable material. The capsule's cup **21** and/or the capsule's membrane **22** may be made of a monolithic material, e.g. a metallic material or a conductive ceramic and/or conducive organic material, or may be made of a structure covered or containing a conductive material, e.g. a conductive coating or track, e.g. an aluminium, iron and/or copper coating or track.

[0059] Brewing unit **1** forms a seat **11** for holding capsule **2**. Moreover, unit **1** comprises a capsule sensing electric circuit with first and second electric connectors A,B and optionally a third connector C.

[0060] In accordance with the invention, first electric connector A and second electric connector B are electrically inter-connected through electrically conductive material **21**,**22**,**24** of capsule **2** when capsule **2** is present in the seat **11**. Connectors A,B,C are electrically disconnected when capsule **2** is not in seat **11**. Hence, sensing electric circuit circuit A,Aa,a,B,Bb, b,abc is closed or interrupted depending on the presence or absence, respectively, of capsule **2** in seat **11**.

[0061] As illustrated in FIG. **12**, electric circuit A,Aa,a,B, Bb,b,abc comprises a module abc. Module abc may include a processor or other form of controller connected to an electric sensor of sensing an electric characteristic of the electric circuit. For instance, module abc is arranged for:

[0062] detecting a presence of capsule **2** in seat **11** by sensing a voltage and/or a current circulating between the first and second electric connectors A,B; and/or

[0063] recognising a capsule type from a plurality of different types of capsules by measuring a type-dependant electric characteristic, such as an impedance e.g. resistance, of capsule **2** when present in the seat **11** and electrically connected to first and second electric connectors A,B.

[0064] As mentioned above and illustrated in FIG. **12**, electric circuit A,Aa,a,B,Bb,b,abc may comprise a third electric connector C which is electrically connectable to first electric connector A through an electric path AC in the capsule's electrically conductive material **21**,**22** that is different to an electric path AB in the electrically conductive material **21**,**24'** connecting first and second electric connectors A,B.

[0065] As illustrated in FIG. **12**, the capsule sensing electric circuit may comprise a control circuit abc that is connected via connectors a,b,c and lines Aa,Bb,Cc to connectors A,B,C associated with seat **11** for coming into contact with capsule **2** when present in seat **11**.

[0066] At least one of the electric connectors B is arranged to contact a capsule surface made of the electrically conductive material **24'** of capsule **2** when present in the seat **11** and to circulate an electric current therethrough. At least one of the electric connectors A,C can be arranged to pierce a capsule surface, in particular a non-conductive surface, to come into contact with the electrically conductive material **21**,**22** of capsule **2** underneath its surface, when capsule **2** is present in the seat **11**, and to circulate an electric current through this conductive material.

[0067] For the purpose of exemplification, FIG. **11** illustrates a structure of brewing unit **1** that may be fitted with this capsule sensing electric circuit.

[0068] In this particular embodiment, brewing unit **1** comprises first and second enclosing parts **13***a*,**13***b* delimiting a capsule chamber that forms seat **11**. Enclosing parts **13***a*,**13***b* are movable apart for inserting capsule **2** into seat **11** and/or removing capsule **2** from seat **11** and are movable together to hold capsule **2** in seat **2** for beverage preparation from capsule **2**, in particular by circulating a liquid such as water into capsule **2** through ingredient **20** and out of capsule **2**.

[0069] First and second enclosing parts **13***a*,**13***b* may be moved together and apart on a frame **18** by actuating pivotable handle **14**.

[0070] Further constructional details of brewing unit **1** may be found in WO 2009/043630 which is hereby incorporated by way of reference. It is to be noted that other brewing unit structures may be used to implement the present invention, in particular as disclosed EP 1 646 305, EP 1 859 713 and EP 1 859 714.

[0071] First and/or second enclosing part(s) **13***a*,**13***b* may form and/or bear one or more of electric connectors A, B, C.

[0072] For instance, first and second enclosing parts **13***a*, **13***b* are configured to be movable together so as to squeeze therebetween an electrically conductive portion **24**,**24'**, such as a tongue or peripheral flange e.g. rim with a seal, of capsule **2** when present in seat **11**. Electric connector B can be mounted at rim **111** of enclosing part **13***b* adjacent squeezed rim **24** with seal **24'**. Seal **24'** urged between enclosing parts **13***a*,**13***b* may ensure water-tightness.

[0073] Seat **11** may include an upstream capsule piercer **12***a* and a downstream capsule piercer **12***b*. For example, upstream piercer is formed of one to three of four water injection blades **12***a*. Downstream piercer may be made of a surface **12***b* forming a series of piercing elements such as piercing pyramids that tear open membrane **22**. Such piercing element may form one or more electric connectors A,C arranged to be electrically inter-connected by an electrically conductive path AB of capsule **2**, when present in the seat **11** and in particular when pierced by the piercer, and to circulate an electric current therethrough. In a variation, downstream piercer **12***b* may be formed by a non-intrusive extraction surface, i.e. the surface is not arranged to penetrate and/or tear open membrane **22**. In this case, membrane **22** may be pre-pierced or may include a self-opening configuration. An electric contact may nevertheless be ensured between membrane **22** and such an extraction surface by urging membrane **22** and

the extraction surface. The same principle applies if downstream piercer **12***b* acts as a delayed opener, i.e. piercer causing opening of membrane **22** only after start-up of beverage preparation, e.g. under the effect of rising pressure in capsule **2** upon injection of pressurised liquid via or along opener **13***a*.

[0074] The beverage preparation machine with such a brewing unit **1** typically includes one or more of the following components:

[0075] a) brewing unit **1**, for holding in a beverage preparation configuration a capsule **2** containing a flavouring ingredient **20** and for guiding an incoming flow of liquid, such as water, through this ingredient to a beverage outlet **15**;

[0076] b) an in-line heater **16**, such as a thermoblock, for heating this flow of liquid to be supplied to capsule seat **11** of brewing unit **1** via a fluid connector **17**;

[0077] c) a pump for pumping liquid through in-line heater **16**;

[0078] d) one or more fluid connecting members for guiding liquid from a source of liquid, such as a tank of liquid, to beverage outlet **15**;

[0079] e) an electric control unit abc, in particular comprising a printed circuit board (PCB), for receiving instructions from a user via an interface and for controlling in-line heater **16** and the pump; and

[0080] f) one or more electric sensors for sensing at least one operational characteristic selected from characteristics of seat **11**, in-line heater **16**, the pump, the liquid reservoir, a used capsule collector, a flow of liquid, a pressure of liquid and a temperature of liquid, and for communicating such characteristic(s) to the control unit.

[0081] Heater **16** may be a thermoblock or an on demand heater (ODH), for instance an ODH type disclosed in EP 1 253 844, EP 1 380 243 and EP 1 809 151. Examples of suitable brewing units and capsule management are for example disclosed in WO 2005/004683, WO2007/135136 and WO 2009/043630, which are hereby incorporated by way of reference. Suitable beverage preparation modules are for instance disclosed in WO 2009/074550 and WO 2009/130099, which are hereby incorporated by way of reference.

[0082] Different configurations of electric connectors A,B,C relative to seat **11** are illustrated in FIGS. **1** to **9**.

[0083] FIG. **1** illustrates an embodiment with two electric connectors A**1**,B**1** in seat **11** of brewing unit **1**. Connectors A**1**,B**1** are arranged to come into contact with cup **21** of capsule **2**. Typically, connectors A**1**,B**1** are formed by a pair of piercing elements **12***a* that open an upstream part of capsule **2** for injecting water into capsule **2**. In this case, the electric path in capsule **2** joining connectors A**1**,B**1** may extend along a bottom (upstream part) of cup **21**.

[0084] FIG. **2** illustrates another embodiment of the invention in which a first connector A**2** is arranged to come into contact with cup **21** of capsule **2**, e.g. by piercing, and a second connector B**2** is arranged to come into contact with capsule ring **23**, typically a part of capsule **2** that extends outside seat **11**. For instance, connector B**2** is formed by support **151** of part **13***b* in FIG.

[0085] **11**. In this case, capsule **2** should comprise the electrically conductive material at least in a central part of the bottom of cup **21**, extend therefrom along the sidewalls of cup **21** and cross peripheral rim **24** to reach ring **23** that is made of electrically conductive material. It should be noted that cup **21** and/or peripheral rim **24** may be made of electrically conductive material or may merely bear conductive tracks in or on a non-conductive structure forming these parts. Moreover, peripheral ring **23** may be made of electrically conductive material generally along its entire periphery or may be made of an electrically non-conductive structure bearing a track of conductive material, e.g. radially extending from peripheral rim **24**. In the latter case, connector B**2** may be ring-shaped and extend over a substantial part or the entire periphery of ring **23** to intercept the conductive radial track. In the former case, connector B**2** may be a point connector contacting any point of conductive ring **23**.

[0086] FIG. **3** illustrates a further embodiment in which both connectors A**3**,B**3** come into contact with ring **23** of capsule **2** at spaced apart locations, e.g. opposite locations. In this case, the conductive path between the connectors A**3**,B**4** can extend generally across membrane **22**, if conductive, or along rim **24** and/or ring **23** if membrane is non-conductive or significantly less conductive than rim **24** and/or ring **23**.

[0087] FIG. **4** shows an embodiment in which connectors A**4**,B**4** come into contact with capsule rim **24**, in particular a sealing element **24** of capsule **2**. In this configuration, the conductive path between the connectors A**4**,B**4** may extend generally across membrane **22**, if conductive, or along rim **24** and/or ring **23** if membrane **22** is non-conductive or poorly conductive.

[0088] FIG. **5** illustrates a further embodiment in which connectors A**5**,B**5** come into contact with capsule cup **21** and membrane **22**. In this configuration, the conductive path between the connectors A**5**,B**5** may extend generally along capsule cup **21** and membrane **22**. In a variation, the conductive path may be formed by a conductive wire, indicated by dotted line **25**, extending through capsule **2** between connectors A**5**,B**5**.

[0089] FIG. **6** illustrates yet another embodiment, similar to the embodiment of FIG. **3**, in which connectors A**5**,B**5** come into contact with rim **24** at the periphery of membrane **22**. In this configuration, the conductive path between connectors A**6**,B**6** may extend through membrane **22**.

[0090] FIG. **7** shows a variation of the embodiment of FIG. **2**, in which second connector B**7** contacts a sealing member formed on rim **24** for sealing off seat **11** around capsule **2** when brewing unit **1** is closed.

[0091] FIG. **8** shows a yet further embodiment in which first connector A**8** is located on sealing member **24'** on rim **24** and second connector B**8** is located on rim **24** itself. For instance, rim **24** is a metallic peripheral extension of membrane **22** and sealing member **24'** an elastomeric ring loaded with conductive material such as metallic particles. Moreover, first and second connectors A**8**,B**8** may be elastically constrained towards each other so as to touch each other, and be in electrical contact, when enclosing parts **13***a*,**13***b* are together. When enclosing parts **13***a*,**13***b* are spaced apart (open) first and second connectors A**8**,B**8** are not touching each other and not in electric direct contact. This configuration permits several level of sensing.

[0092] The lack of electric contact between connectors A**8**,B**8** indicates that enclosing parts **13***a*,**13***b* are spaced apart and that brewing unit **1** is open. In this case, injection of liquid into seat **11** can be blocked for safety and/or hygiene reasons and/or the machine may be run down into an economy mode at reduced energy consumption. When electric contact between connectors A**8**,B**8** is detected, it means that the enclosing parts **13***a*,**13***b* are closed. If the voltage drop between connectors A**8**,B**8** is very low, e.g. close to zero, it means that no capsule is present in seat **11**. In this latter case,

beverage preparation may be blocked however service modes, such as rinsing and/or descaling, may be allowed. When the voltage drop is at an intermediate level, between the maximum voltage drop when the enclosing parts **13***a*,**13***b* are spaced apart and the minimum voltage drop when the enclosing parts **13***a*,**13***b* are closed without any capsule **2** in-between, its means that a capsule **2** is present in seat **2** with rim **24** and seal **24'** connecting connectors A**8**,B**8**. In this latter case, beverage preparation may be allowed. In a more advanced configuration, the electric circuit may be arranged to sense several intermediate voltage drops corresponding to different levels of resistivity of rim **24** and seal **24'** that are type-dependant. In other words, the type of capsule may be derived from the intermediate voltage drop and the beverage preparation process may be adjusted accordingly in an automatic manner.

[0093] FIG. **9** illustrates an embodiment with three connectors A**9**,B**9**,C**9** that is equivalent to the embodiment shown in FIG. **12** and that combines the electric contact configurations A**5**(=A**7**),B**5**,B**7** of the embodiments shown in FIGS. **5** and **7**.

[0094] In all these embodiments, the electric characteristics of capsules **2** may be used to: detect a presence or absence of capsule **2** in seat **11**; and/or to identify a type of a capsule **2** in seat **11** selected from a plurality of different capsule types.

[0095] In the latter case, the electric characteristic of one type of capsules **2** is different to another type of capsules **2**. For instance, the impedance, in particular the resistivity of the conductive paths AB,AC through the capsules may differ between the capsule types. For example, the geometry of the conductive path is changed and/or the electric material carrying the electric path is changed from one type to another type so as to provide a differentiating electric marking for each capsule type.

[0096] In one embodiment, different types of capsules **2** have all the same electric characteristics with respect to their capsule cup **21** and membrane **22**. However, capsule rims **24** bear sealing members that have type-dedicated electric properties, in particular a type-dedicated resistivity. For example, these sealing members are made of rubber material that is loaded with conductive particles. The amount and/or nature of the conductive particles, e.g. copper, iron and/or aluminium particles, are different for the different capsule types to allow their automatic identification by measuring their resistivity.

[0097] As mentioned above, the seal at rim **24** may be used to seal seat **11** around capsule **2** between enclosing part **13***a*, **13***b* of brewing unit **1**. A suitable implementation of such seals on capsules and their (mechanical) interaction with the seat can be found in EP 1 654 966, the content of which is hereby incorporated by way of reference.

[0098] During use, e.g. of the configuration shown in FIG. **12**, the electric circuit A,Aa,a,B,Bb,b,abc is put under power, e.g. a voltage is applied between connectors A,B,C. By measuring the current passed from connector A to connector B and from connector A to connector C, the presence of a capsule with electrically conductive paths AB,AC can be derived from the existence of a circulating current that is greater than zero (i.e. the electric circuit is closed between connectors A,B,C by the presence of capsule **2**) and/or the type-dedicated resistivity of the paths AB,AC can be derived by measuring the level of the current passed and dividing the voltage by the measured current.

[0099] Control unit abc may be programmed to run down automatically the beverage preparation machine into an energy saving mode in the absence of a capsule **2** in seat **11**, for instance by shutting-off an energy consuming user-interface or a heat-accumulation heater **16**. The absence of a capsule **2** in seat **11** may also allow a service mode, e.g. the user may be allowed to request the carrying out of a cleaning and/or rinsing process.

[0100] Moreover, control unit abc may be programmed to carry out automatically different beverage preparation processes depending on the type of a capsule identified by the system. For instance, the amount and/or the temperature of water circulated through the capsules may be adjusted for each type of capsules.

[0101] If appropriate, the control unit abc may be deactivated by by-passing the connectors A,B,C. Such a by-pass may be "virtual", for example by programming control unit abc, e.g. a user may request via an appropriate user-interface deactivation of the system or an after-sale service may reprogram control unit abc for such a purpose. By-passing connectors A,B,C may also be achieved physically, e.g. by inserting a by-pass S**1**,S**2** between connectors A,B,C. Such a by-pass S**1**,S**2** may be made of an appropriate electric conductor that is associated with seat **11** such as to simulate the presence of a conductive capsule **2**. Such conductors S**1**,S**2**, e.g. an electric conductive track inserted into seat **11** and following the walls of seat **11**, should be sufficiently small to leave sufficient unoccupied space in seat **11** for inserting a capsule therein of the same or similar size as conductive capsule **2** or of a smaller size to account for the space occupation of a "larger" by-pass.

1. A brewing unit of a beverage preparation machine comprising: a seat for holding a capsule comprising an electrically conductive material; and a capsule sensing electric circuit with first and second electric connectors, the first electric connector and the second electric connector are:

electrically connected through the electrically conductive material of the capsule when the capsule is present in the seat; and

electrically disconnected when the capsule is not in the seat and/or when the seat is in an open configuration for receiving and/or evacuating a capsule, so as to close and interrupt, respectively, the capsule sensing electric circuit.

2. The unit of claim **1**, wherein the electric circuit comprises a module for:

detecting a presence of the capsule in the seat by sensing a voltage and/or a current circulating between the first and second electric connectors.

3. The unit of claim **1**, wherein the electric circuit comprises a third electric connector which is electrically connectable to the first electric connector through an electric path in the electrically conductive material of the capsule that is different to an electric path in the electrically conductive material connecting the first and second electric connectors.

4. The unit of claim **1**, wherein at least one of the electric connectors is arranged to contact a capsule surface made of the electrically conductive material of the capsule when present in the seat and to circulate an electric current therethrough.

5. The unit of claim **1**, wherein at least one of the electric connectors is arranged to pierce a capsule surface, to come into contact with the electrically conductive material of the capsule underneath its surface, when the capsule is present in the seat, and to circulate an electric current through the conductive material.

6. The unit of claim **1**, comprising first and second enclosing parts defining a capsule chamber that forms the seat and are movable together to hold the capsule in the seat for beverage preparation from the capsule.

7. The unit of claim **6**, wherein the first and the second enclosing parts form an electric connector.

8. The unit of claim **1**, wherein first and second electric connectors are arranged to:

electrically contact each other in the absence of any capsule in the seat that is in a closed configuration; and

be out of electrical contact when the seat is in an open capsule receiving and/or evacuation configuration.

9. The unit of claim **1**, wherein the seat comprises a capsule piercer forming a series of such piercing elements, the capsule piercer forming one of the electric connectors which is arranged to be in contact with an electrically conductive portion of the capsule, when present in the seat and to circulate an electric current therethrough.

10. A method of operating a brewing unit of a beverage preparation machine comprising a seat for holding a capsule comprising an electrically conductive material; and a capsule sensing electric circuit with first and second electric connectors, the first electric connector and the second electric connector are electrically connected through the electrically conductive material of the capsule when the capsule is present in the seat, and electrically disconnected when the capsule is not in the seat and/or when the seat is in an open configuration for receiving and/or evacuating a capsule, so as to close and interrupt, respectively, the capsule sensing electric circuit, comprising: powering an electric circuit and measuring at least one electric characteristic, such as a circulating current and/or a voltage drop between the first and second electric connectors.

11. A method for using a capsule having an electrically conductive material for connecting electrically the electric connectors of a brewing unit of a beverage preparation machine comprising a seat for holding a capsule comprising an electrically conductive material; and a capsule sensing electric circuit with first and second electric connectors, the first electric connector and the second electric connector are electrically connected through the electrically conductive material of the capsule when the capsule is present in the seat, and electrically disconnected when the capsule is not in the seat and/or when the seat is in an open configuration for receiving and/or evacuating a capsule, so as to close and interrupt, respectively, the capsule sensing electric circuit, comprising inserting the capsule so that it is held in the seat and brewing a beverage.

12. A capsule for a brewing unit of a beverage preparation machine comprising a seat for holding a capsule comprising an electrically conductive material; and a capsule sensing electric circuit with first and second electric connectors, the first electric connector and the second electric connector are electrically connected through the electrically conductive material of the capsule when the capsule is present in the seat, and electrically disconnected when the capsule is not in the seat and/or when the seat is in an open configuration for receiving and/or evacuating a capsule, so as to close and interrupt, respectively, the capsule sensing electric circuit comprising:

a non-conductive structure; and a track made of the electrically conductive material supported by the structure for electrically connecting said first and second electric connectors.

13. A set of capsules for a brewing unit of a beverage preparation machine comprising a seat for holding a capsule comprising an electrically conductive material; and a capsule sensing electric circuit with first and second electric connectors, the first electric connector and the second electric connector are electrically connected through the electrically conductive material of the capsule when the capsule is present in the seat, and electrically disconnected when the capsule is not in the seat and/or when the seat is in an open configuration for receiving and/or evacuating a capsule, so as to close and interrupt, respectively, the capsule sensing electric circuit, the capsules comprising:

an electrically conductive material and differing from each other by at least one electric characteristic of the electrically conductive material of each capsule.

14. A method of deactivating an electric circuit of a brewing unit of a beverage preparation machine comprising a seat for holding a capsule comprising an electrically conductive material; and a capsule sensing electric circuit with first and second electric connectors, the first electric connector and the second electric connector are electrically connected through the electrically conductive material of the capsule when the capsule is present in the seat, and electrically disconnected when the capsule is not in the seat and/or when the seat is in an open configuration for receiving and/or evacuating a capsule, so as to close and interrupt, respectively, the capsule sensing electric circuit, comprising electrically connecting the electric connectors with a by-pass.

15. The method of claim **14**, wherein the conductor is arranged to extend along a peripheral part of the seat so as to leave sufficient room in the seat for inserting a separate capsule.

16. The unit of claim **1**, wherein the electric circuit comprises a module for recognising a capsule type from a plurality of different types of capsules by measuring a type-dependant electric characteristic of the capsule when present in the seat and electrically connected to the first and second electric connectors.

17. The unit of claim **7**, wherein the first and second enclosing parts being configured to be movable together so as to squeeze therebetween an electrically conductive portion of the capsule when the capsule is present in the seat, and at least one of the electric connectors being mounted in and/or adjacent one of the enclosing parts adjacent to the squeezed portion.

18. A method of operating a brewing unit as defined in claim **10**, comprising deriving at least one of:

a presence or an absence in the seat of a capsule that comprises an electrically conductive material connected to and connecting the connectors by forming therebetween an electrically conductive path;

an open configuration of the seat for receiving and/or evacuating a capsule; and

a capsule type selected from a plurality of different types of capsules comprising an electrically conductive material having a type-dependant electric characteristic measurable by the electric circuit when a capsule of one of the types is present in the seat.

* * * * *